PHARMACOPOEIA
OF THE PEOPLE'S REPUBLIC OF CHINA

(2005)

Volume I

Chinese Pharmacopoeia Commission

People's Medical Publishing House

PHARMACOPOEIA OF THE PEOPLE'S REPUBLIC OF CHINA

(2005)

Volume Ⅰ

ISBN 7-117-06982-1



This pharmacopoeia is the English version edited from Pharmacopoeia of the People's Republic of China 2005. The Chinese edition is approved by the State Food and Drug Administration of the People's Republic of China to be effective from July 1, 2005, in accordance with the official document GSYJZ (2005) 234.

图书在版编目（CIP）数据

中华人民共和国药典. 第1部：2005年版英文版/国家药典委员会编译. —北京：人民卫生出版社，2005.9
ISBN 7-117-06982-1

Ⅰ. 中... Ⅱ. 国... Ⅲ. 药典-中国-2005-英文
Ⅳ. R921.2

中国版本图书馆CIP数据核字（2005）第078112号

Compiled by The State Pharmacopoeia Commission of P. R. China

All rights reserved

Executive Editors: KUANG Luojun ZHANG Ke
Cover Designer: GUO Miao
Format Designer: WEI Hongbo
Executive Correctors: LI Hua HUANG Yanyan YANG Liqin LI Qiuzhai

ISBN 7-117-06982-1/R · 6983

Copyright © 2005 by People's Medical Publishing House

Published by People's Medical Publishing House
3,3Qu, Fang Qun Yuan, Fang Zhuang, Fengtai Dist., Beijing, China, 100078

Printed in the People's Republic of China

Contents

Membership of the 8th Pharmacopoeia Commission of the People's Republic of China ····· Ⅲ
Editorial Board of Pharmacopoeia of the People's Republic of China (2005) Volume Ⅰ ····· Ⅵ
Preface ····· Ⅶ
History of the Pharmacopoeia of the People's Republic of China ····· Ⅺ
New Admissions ····· XIX
Omissions or Adjustments Included in Volume Ⅰ (2000 Edition) ····· XXI
General Notices ····· XXⅢ
Monographs Part Ⅰ Chinese Materia Medica and Prepared Slices of Chinese Crude Drugs ····· 1
Monographs Part Ⅱ Oil, Fats and Extractives ····· 317
Monographs Part Ⅲ Traditional Chinese Patent Medicines and Simple Preparations ····· 335
Appendices ····· A-1
Index ····· I-1

Membership of the 8th Pharmacopoeia Commission of the People's Republic of China

Chairman:

ZHENG Xiaoyu (郑筱萸)

Vice Chairmen:

JIANG Zuojun (蒋作君)
SHAO Mingli (邵明立)
LI Zhenji (李振吉)
YUAN Yonglin (袁永林)

Members of the Executive Committee:

ZHENG Xiaoyu (郑筱萸)
JIANG Zuojun (蒋作君)
SHAO Mingli (邵明立)
LI Zhenji (李振吉)
YUAN Yonglin (袁永林)
REN Dequan (任德权)
SANG Guowei (桑国卫)
CAO Wenzhuang (曹文庄)
BAI Huiliang (白慧良)
ZHANG Zhijun (张志军)
XIE Xiaoyu (谢晓余)
WANG Guorong (王国荣)
ZHOU Fucheng (周福成)
WANG Ping (王平)
JIN Shaohong (金少鸿)
ZHOU Haijun (周海钧)
ZHAO Kai (赵铠)
XIAO Peigen (肖培根)
WANG Yongyan (王永炎)
ZHOU Chaofan (周超凡)
TIAN Songjiu (田颂九)
ZHU Junren (诸骏仁)
JIN Youyu (金有豫)
YANG Zhongyuan (杨仲元)
LEI Dianliang (雷殿良)

Members: (Arranged alphabetically according to the names)

AN Huamin (安华民)
AN Jingxian (安静娴)
BAI Huiliang (白慧良)
BAO Jiake (鲍家科)
BI Kaishun (毕开顺)
BI Shengli (毕胜利)
BI Xiuling (毕秀玲)
CAI Baochang (蔡宝昌)
CAI Shaoqing (蔡少青)
CAO Baocheng (曹宝成)
CAO Caifang (曹采方)
CAO Wenzhuang (曹文庄)
CAO Xuetao (曹雪涛)
CHE Qingming (车庆明)
CHEN Daofeng (陈道峰)
CHEN Gang (陈钢)
CHEN Jianxing (陈坚行)
CHEN Kaixian (陈凯先)
CHEN Keji (陈可冀)
CHEN Shengdi (陈生弟)
CHEN Shiming (陈世铭)
CHEN Shiping (陈实平)
CHEN Wei (陈薇)
CHEN Weifeng (陈慰峰)
CHEN Woju (陈我菊)
CHEN Xiyuan (陈希元)
CHEN Zhensheng (陈镇生)
CHENG Pengfei (程鹏飞)
CHENG Yaqin (程雅琴)
CHU Jiayou (褚嘉祐)
DENG Bingxu (邓丙戌)
DING Jianmi (丁建弥)
DONG Guanmu (董关木)
DONG Xiao'ou (董晓鸥)
DONG Yi (董怡)
DU Pinghua (杜平华)
DU Zhanming (杜占明)
DUO Jie (多杰)
FAN Jifen (范积芬)
FENG Fansheng (冯帆生)
FENG Guokang (冯国康)
FENG Guoping (冯国平)
FENG Li (冯丽)
FU Wen (傅文)
FU Xueren (富学仁)
GAN Shaobo (甘绍伯)
GAO Feng (高峰)
GAO Qipin (高其品)
GAO Runlin (高润霖)
GAO Xuemin (高学敏)
GE Sangbazhu (格桑巴珠)

GE Sangsuolang（格桑索朗）
GONG Qinyan（贡沁燕）
GU Jianren（顾健人）
GU Niufan（顾牛范）
GUO Chengming（郭成明）
GUO De'an（果德安）
GUO Dianwu（郭殿武）
HA Mulati · WU Pu'er（哈木拉提 · 吾普尔）
HE Jiangong（贺建功）
HE Mingxin（何铭新）
HE Xun（何询）
HOU Huimin（侯惠民）
HOU Shixiang（侯世祥）
HU Changqin（胡昌勤）
HUANG Fei（黄斐）
HUANG Luqi（黄璐琦）
HUANG Meisheng（黄美声）
JI Shaoliang（季绍良）
JI Shen（季申）
JI Wei（纪炜）
JI Yang（嵇扬）
JI Yubin（季宇彬）
JIA Tianzhu（贾天柱）
JIANG Ning（蒋宁）
JIANG Xiongping（姜雄平）
JIANG Zhuming（蒋朱明）
JIANG Zuojun（蒋作君）
JIN Shaohong（金少鸿）
JIN Youyu（金有豫）
JIN Yulan（金于兰）
KANG Shuanglong（康双龙）
KUANG Haixue（匡海学）
LAI Shilong（赖世隆）
LAO Jiahua（劳家华）
LEI Dianliang（雷殿良）
LI Bo（李波）
LI Changling（李长龄）
LI Dakui（李大魁）
LI Defu（李德富）
LI Guangrong（李光荣）
LI Jingyun（李敬云）
LI Lianda（李连达）
LI Maoliang（李茂良）
LI Mingfu（李明富）
LI Xudong（李旭东）
LI Zhenji（李振吉）
LIANG Guodong（梁国栋）
LIANG Zujiang（梁祖江）
LIAO Lütan（廖履坦）
LIN Ruichao（林瑞超）
LIN Sanren（林三仁）
LIN Xiangtong（林祥通）
LIN Xiaojun（林晓军）
LIN Yongqi（林永齐）
LIN Zhibin（林志彬）
LING Dakui（凌大奎）
LIU Baokui（刘保奎）
LIU Gengtao（刘耕陶）
LIU Shulin（刘树林）
LIU Tiegang（刘铁钢）
LIU Wenying（刘文英）
LIU Wuxia（刘午霞）
LIU Xiaolin（刘晓琳）
LIU Youning（刘又宁）
LU Aiying（卢爱英）
LU Bin（陆彬）
LÜ Guibao（吕归宝）
LU Huiwen（陆惠文）
LU Jing（鲁静）
LUO Ailun（罗爱伦）
LUO Guo'an（罗国安）
LUO Zhifu（罗志福）
LUO Zhuoya（罗卓雅）
MA Dalong（马大龙）
MAI Maitihasimu（买买提哈斯木）
NA Shengsang（那生桑）
NAN Nan（南楠）
NI Daoming（倪道明）
NI Madunzhu（尼玛顿珠）
NIE Xiaochun（聂小春）
NIU Ben（钮犇）
PAN Weifang（潘维芳）
PEI Xuetao（裴雪涛）
PU Xufeng（薄旭峰）
QI Ping（齐平）
QI Zhongtian（戚中田）
QI Zibai（祁自柏）
QIAN Weiqing（钱维清）
QIAN Xiaohong（钱小红）
QIAN Zhongzhi（钱忠直）
QIN Shaorong（秦少容）
QIU Shilin（仇士林）
RAO Chunming（饶春明）
REN Dequan（任德权）
REN Jinbin（任晋斌）
REN Meimei（任玫玫）
RUAN Li（阮力）
SANG Guowei（桑国卫）
SHA Zhenfang（沙振方）
SHAN Yuandong（单渊东）
SHANG Hong（尚红）
SHAO Mingli（邵明立）
SHE Qing（佘清）
SHEN Beifen（沈倍奋）
SHEN Huifeng（沈慧凤）
SHEN Pingniang（沈平孃）
SHEN Xinliang（沈心亮）
SHENG Shuguang（盛曙光）
SU Demo（苏德模）
SUN Jiling（孙吉令）
SUN Piaoyang（孙飘扬）
SUN Shuchun（孙树椿）
SUN Wenji（孙文基）
SUN Yan（孙燕）
TANG Jiaqi（唐家琪）
TANG Qiaoying（唐巧英）
TANG Qiujin（唐秋瑾）
TANG Renjiu（唐人九）
TANG Yuantai（唐元泰）
TIAN Ruihua（田瑞华）
TIAN Songjiu（田颂九）
TONG Chunrong（童春蓉）
TU Pengfei（屠鹏飞）
WANG Bailu（王白露）
WANG Chunlong（王春龙）
WANG Fu（汪复）
WANG Guorong（王国荣）
WANG Guozhi（王国治）
WANG Heng（王姮）
WANG Hua（汪华）
WANG Jian（王健）
WANG Jingxing（王憬惺）
WANG Junzhi（王军志）
WANG Muzou（王慕邹）
WANG Ningli（王宁利）
WANG Ningsheng（王宁生）
WANG Pengfu（王鹏富）

WANG Ping（王平）
WANG Wentao（王文涛）
WANG Xiaoning（王小宁）
WANG Yiting（王依婷）
WANG Yongyan（王永炎）
WANG Zhiqing（王志清）
WU Yonglin（吴永林）
XIAO Peigen（肖培根）
XIE Peishan（谢培山）
XU Anlong（徐安龙）
XU Jianguo（徐建国）
XU Lianying（徐莲英）
XU Yucong（徐愚聪）
YAN Shiyun（严世芸）
YANG Shilin（杨世林）
YANG Yaoting（杨耀庭）
YAO Damu（姚达木）
YAO Xinsheng（姚新生）
YIN Hongzhang（尹红章）
YU Dequan（于德全）
YU Ruying（俞如英）
YUAN Qinsheng（袁勤生）
YUAN Yonglin（袁永林）
ZHANG Bochong（张伯崇）
ZHANG Guangwen（章光文）
ZHANG Kejian（张克坚）
ZHANG Peipei（张培培）
ZHANG Qiusheng（张秋生）
ZHANG Xiulan（张秀兰）
ZHANG Zhongming（张忠明）
ZHAO Kai（赵锴）
ZHAO Weiliang（赵维良）
ZHENG Shurong（郑淑荣）
ZHONG Bohua（仲伯华）
ZHOU Chaofan（周超凡）
ZHOU Guisheng（周桂生）
ZHOU Haijun（周海钧）
ZHOU Wenquan（周文泉）
ZHU Junren（诸骏仁）
ZHU Yan（朱雁）
ZHUANG Hui（庄辉）
WANG Qingguo（王庆国）
WANG Xiang（王祥）
WANG Xiaoping（王晓平）
WANG Yongming（王永铭）
WANG Youchun（王佑春）
WEI Shuli（魏树礼）
XIA Zhenmin（夏振民）
XIE Guilin（谢贵林）
XIE Shichang（谢世昌）
XU Bingjiu（徐秉玖）
XU Kangsen（徐康森）
XU Qingfeng（许青峰）
XU Zhikai（徐志凯）
YANG Huichuan（杨汇川）
YANG Weiyan（杨伟炎）
YANG Yonghong（杨永弘）
YAO Naili（姚乃礼）
YE Yunfei（叶云飞）
YING Xianyong（营先勇）
YU Li（余立）
YU Yongming（余永铭）
YUAN Tianxi（袁天锡）
ZENG Ming（曾明）
ZHANG Boli（张伯礼）
ZHANG Hanming（张汉明）
ZHANG Liqun（张立群）
ZHANG Qiming（张启明）
ZHANG Shibin（张仕斌）
ZHANG Zhijun（张志军）
ZHANG Yu（张宇）
ZHAO Lanfeng（赵兰峰）
ZHAO Zhilan（赵志兰）
ZHENG Xiaoli（郑晓丽）
ZHONG Dafang（钟大放）
ZHOU Fucheng（周福成）
ZHOU Guo'an（周国安）
ZHOU Jianping（周建平）
ZHOU Xiafen（周霞芬）
ZHU Liping（朱丽萍）
ZHU Yanmin（朱彦民）
ZOU Jieming（邹节明）
WANG Shengqi（王升启）
WANG Xiaoliang（王晓良）
WANG Yinghua（王英华）
WANG Yongxian（王勇先）
WANG Zhengtao（王峥涛）
WENG Weiliang（翁维良）
XIANG Ping（项平）
XIE Kongbiao（谢孔标）
XIE Xiaoyu（谢晓余）
XU Huinan（徐惠南）
XU Lianlian（徐连连）
XU Shisong（徐世淞）
XU Zuoliang（许佐良）
YANG Liang（杨梁）
YANG Xiuwei（杨秀伟）
YANG Zhongyuan（杨仲元）
YAO Shouzhuo（姚守拙）
YIN Chunhua（印春华）
YOU Kai（游凯）
YU Mosong（余模松）
YU Yongxin（俞永新）
YUAN Wenwei（袁雯玮）
ZENG Yixin（曾益新）
ZHANG Chengui（章臣桂）
ZHANG Huayuan（张华远）
ZHANG Manlai（张满来）
ZHANG Qingbo（张清波）
ZHANG Wei（张伟）
ZHANG Zhirong（张志荣）
ZHAO Jindong（赵进东）
ZHAO Ming（赵明）
ZHEN Yongsu（甄永苏）
ZHENG Xiaoyu（郑筱萸）
ZHONG Guoying（钟帼英）
ZHOU Furong（周富荣）
ZHOU Guoxiong（周帼雄）
ZHOU Kai（周凯）
ZHU Jiabi（朱家壁）
ZHU Xuejun（朱学骏）
ZHU Zhifeng（朱志峰）

Deceased Members: LI Anjuan（李安娟） YU Guodian（余国奠）

Editorial Board of Pharmacopoeia of the People's Republic of China (2005) Volume Ⅰ

Editor-in-Chief:
SANG Guowei (桑国卫)

Executive Associate Editor-in-Chief:
WANG Guorong (王国荣)

Associate Editors-in-Chief:

CHEN Daofeng (陈道峰)	LU Jing (鲁静)	QI Ping (齐平)
FANG Tingyu (方廷钰)	LUO Guo'an (罗国安)	WANG Zhengtao (王峥涛)
GUO De'an (果德安)	MI Heming (宓鹤鸣)	ZHANG Mian (张勉)

Editors: (Arranged alphabetically according to the names)

CHAI Yifeng (柴逸峰)	CHEN Daofeng (陈道峰)	FANG Tingyu (方廷钰)
GUO De'an (果德安)	GUO Hongzhu (郭洪祝)	HAO Bo (郝博)
HE Yi (何轶)	HONG Zhanying (洪战英)	HUANG Jianming (黄建明)
JIA Dexian (贾德贤)	LIANG Qionglin (梁琼麟)	LIU Lifang (刘丽芳)
LU Jing (鲁静)	LUO Guo'an (罗国安)	MA Shuangcheng (马双成)
MI Heming (宓鹤鸣)	QI Ping (齐平)	QIAO Fei (乔菲)
QIN Luping (秦路平)	SANG Guowei (桑国卫)	SHI Shangmei (石上梅)
WANG Changhong (王长虹)	WANG Guorong (王国荣)	WANG Jingxia (王景霞)
WANG Xu (王旭)	WANG Yiming (王义明)	WANG Zhengtao (王峥涛)
WANG Zhiwei (王志伟)	WEI Feng (魏峰)	XU Desheng (徐德生)
XU Hong (徐红)	XU Luoshan (徐珞珊)	YE Min (叶敏)
YU Jiangyong (于江泳)	ZHAI Weimin (翟为民)	ZHANG Chaofeng (张朝凤)
ZHANG Mian (张勉)	ZHOU Tongshui (周铜水)	

Co-workers: (Arranged alphabetically according to the names)

CHEN Feng (陈峰)	CHENG Xianlong (程显隆)	CHENG Xuemei (程雪梅)
CHOU Guixin (俞桂新)	DU Lilan (都立澜)	FENG Suxiu (冯苏秀)
GU Lihua (谷丽华)	HU Sumin (胡素敏)	JI Bo (嵇波)
LI Haidao (李海岛)	LI Jinhua (李金花)	LOU Ziyang (娄子洋)
LU Jun (卢峻)	LUO Liyu (罗立宇)	MA Lingyun (马玲云)
OU Lina (欧丽娜)	SONG Zonghua (宋宗华)	TIAN Weiwei (田维维)
WU Juanfang (吴娟芳)	YU Enyuan (俞恩圆)	ZHANG Chunyue (张春月)
ZHANG Yumei (张聿梅)	ZHANG Zijia (张紫佳)	ZHAO Yuxin (赵宇新)
ZHU Enyuan (朱恩圆)		

Preface

This edition of the Pharmacopoeia of the People's Republic of China (known as *the Chinese Pharmacopoeia 2005* or in abbreviation as Ch. P 2005) has been prepared in accordance with the principles and designed plan decided by the Eighth Chinese Pharmacopoeia Commission and accomplished with the effort made by Commission members and its Secretariat over more than two years. *The Chinese Pharmacopoeia 2005* adopted by the Executive Commission of the Chinese Pharmacopoeia Commission is approved for implementation by the State Food and Drug Administration of China. This is the eighth edition of Chinese Pharmacopoeia since the founding of the People's Republic of China.

The Chinese Pharmacopoeia 2005 has been considerably revised and improved in General Notices, Requirements of Monographs, General Requirements for Preparations in Appendices and new testing methods, etc. Based on the introduction of advanced technology and experimental methods widely adopted in China and abroad, the contents of Appendices are revised by and large in consistence with those nowadays applied internationally for drug quality control. On the premise that every effort should be made to follow the principle of "safety for use, reliability of therapeutic effect, feasibility of processes, controllability of manufacturing quality and perfection of specification", the monographs admitted in the Pharmacopoeia on the whole reflect the actual clinical use of drugs in China. Furthermore, stylistic rules and layout, wording, units, and symbols, etc. have also been standardized.

The Chinese Pharmacopoeia 2005 is published in three volumes. Volume Ⅰ contains monographs of Chinese materia medica and prepared slice, vegetable oil/fat and its extract, Chinese traditional patent medicines, single ingredient of Chinese crude drug preparations etc.; Volume Ⅱ deals with monographs of chemical drugs, antibiotics, biochemical preparations, radiopharmaceuticals and excipients for pharmaceutical use; Volume Ⅲ contains biological products. *The Requirements for Biologics of the People's Republic of China* is now incorporated into the Chinese Pharmacopoeia for the first time. Based on the characteristics and the needs of improvement of Chinese traditional medicines, chemical drugs and biological products, the research work and the studies are carried out in an active way on drug standards and methodology. At the same time, great efforts are made to unify the national drug standards and to bring them in line with the international standards progressively. In addition, emphasis have been put to harmonization in Appendices of different volumes of Pharmacopoeia, to a sound connection between individual monographs and the relevant appendices, and to the standardization of text wording so as to make this edition more precise and better structured.

The increase of the number of monographs in *the Chinese Pharmacopoeia 2005* is obvious which contains up to 3214 monographs of drugs, with 525 new admissions in total. Volume Ⅰ contains 1146 monographs, with 154 new admissions and 453 revised; Volume Ⅱ deals with 1967 monographs, with 327 new admissions and 522 revised; Volume Ⅲ contains 101 monographs, with 44 new admissions and 57 revised. 9 monographs adopted in *the Chinese Pharmacopoeia 2000* are not admitted in this edition and

123 monographs adopted in *the Requirements for Biologics of the People's Republic of China 2000* and in its *Supplement 2000* are not admitted in this edition.

The number of monographs in Appendices of this edition is much expanded. There are 98 monographs admitted in Appendices of Volume Ⅰ with 12 new admissions, 31 revised and 1 deleted. There are 137 monographs in Appendices of Volume Ⅱ with 13 new admissions, 65 revised and 1 deleted. There are 140 monographs in Appendices of Volume Ⅲ with 62 new admissions, 78 revised and 1 deleted. The monographs in Appendices common to all the three volumes are presented in each volume respectively in a harmonized and unified form.

Extensive applications of contemporary techniques of analysis are shown in this edition. In Volume Ⅰ, the number of monographs adopting thin layer chromatography in the test for identification reaches 1523 and 45 monographs for content determination; the number of monographs adopting high performance liquid chromatography (HPLC) reaches 479 and 518 items are involved; and the number of monographs adopting gas chromatography in the tests for identification and content reaches 47. In Volume Ⅱ, the number of monographs, including testing items, adopting HPLC reaches 848 with an increase of 566 in comparison with that in 2000 edition, and this method is mostly used for the analysis of complex formulation and those drugs containing much more interfering factors such as impurities or excipients, and used for content determination in 223 newly admitted monographs. The number of monographs required for identification by infrared analysis reaches 70; the tests for dissolution and test of content uniformity are added in test items in 93 and 37 monographs, respectively, and the test for related substances is added in 226 monographs, and the requirements for systematic suitability testing are more reasonable. Based on the validation of methodology, the test for bacterial endotoxins instead of pyrogen test in rabbits is introduced to 73 monographs; on the premise that the drug purity is ensured, the test for undue toxicity for 42 monographs is deleted.

Significant revisions and expansion are made in the Appendices of this edition leading a great improvement in the monographs of Appendices. In order to adapt the need of drug administration, new preparations such as implants, rinsing agents, enemas, paint, and smeared films, etc. are admitted in the General Requirement for Preparations. Many subtypes of dosage form are also admitted in General Requirement for Preparations, such as soluble tablets and vaginal effervescent tablets admitted into General Requirement for tablets; sustained release capsules and controlled release capsules admitted into General Requirement for capsules, etc. Test for sterility is added in test items in some of preparations of General Requirement for Preparations. New general testing methods have been admitted, such as Determination of Total Organic Carbon in the Water for Pharmaceutical Use, Test for Visible Particles in Injections, Mass Spectrometry, Determination of Cataplasms Adhension, Test for Allergen, Biological Assay of Calcitonin and Growth Hormone, etc. Furthermore, considerable revisions are made for a number of Appendices according to modern techniques and practical situation, for example, the tests on 12 pesticides containing organic phosphorous and 3 pesticides containing pyrethroid are added for determination of pesticide residues; the test for small volume of injection is included in the Test for Particulate Matter in Injections; the test for system suitability is admitted for Thin-layer Chromatography; Microbial Limit Tests is revised according to the requirements of drug administration route and tests for validation are added; the time of incubation in sterility test has been changed from 7 to 14 days.

In the section of guidelines, such guidelines have been revised to keep pace with the development of

research and production of drugs as the Guidelines the Stability Testing of Drug Substances and Preparations and the Guidelines for Sustained, Controlled and Delayed Release Preparations, and new guidelines are admitted such as the Guidelines for Hygroscopicity and Guidelines for Near-infrared (NIR) Spectrophotometry, etc. Although those guidelines do not serve as legal requirements, they play an important role in assessment of drug quality, in establishing, standardizing and implementing uniform pharmaceutical specification of drugs and medicines.

The safety of pharmaceuticals is another important issue of *the Chinese Pharmacopoeia 2005*. In Appendices of Volume Ⅰ, for example, atomic absorption spectrophotometry or inductively coupled plasma mass spectrometry is introduced to determine 6 kinds of heavy metals and deleterious elements, and the limits for lead, cadmium, mercury, arsenic and cupper are stipulated for the first time; the harmful solvents, such as benzene etc. used in pharmaceuticals should be substituted by other solvents as far as possible. The Guidelines for Application of Safety Tests for Injection of Traditional Chinese Medicine is also admitted in this edition; In Volume Ⅱ, the Test for Particulate Matter in Injections is applied to 126 Injections intended for intravenous injection; the number of monographs adopting the Test for Bacterial Endotoxin reaches 112; the Determination of Residual Solvent includes the requirements of the International Conference on Harmonization (ICH) for residual solvents, and the test is required for 24 drug substances; the Guidelines for the Analysis of Impurities in Drugs, Guidance for the Quality Control of Positron Emission Tomographic and Technetium [^{99m}Tc] Radiopharmaceutical Preparations are also admitted. In Volume Ⅲ, new methods such as Determination of Reverse Transcriptase Activity and Test for Residual Aluminum Content in Human Albumin etc. are admitted, and some test methods are improved such as the test for residual bovine serum albumin and test for residual CHO cell protein, etc. On consideration of the status quo of medical industry and practical situation of drugs for clinical use, the requirements set forth in Detailed Regulations for Clarity Test and Criteria formerly issued by the Ministry of Health are replaced by the method for Determination of Visible Particles in this edition so as to enhance the safety of pharmaceuticals including injections.

According to the theory of traditional Chinese medicine——diagnosis and treatment based on an overall analysis of the illness and the patient's condition, the *Indications* under the Chinese patent preparations have been scientifically standardized, so as to avoid the phenomenon of easy misleading usage of drugs and to give prominence to features of the above theory. At the same time, the attention should be paid to the fact that a phenomenon of "different diseases having same syndrome" and "same disease having different syndromes" exists between "Syndrome" in traditional Chinese medicine and "Disease" in Western medicine. The close combination of "Syndrome" in traditional Chinese medicine and corresponding "Disease" in Western medicine embodies the scientificity and accuracy of the expression of *Indications*, so as to ensure clinicians to understand the *Indications* precisely and make use of drugs rationally, thus facilitating the sound development of traditional Chinese medicine in the new era.

The working procedures for preparation of this edition also has been improved. In addition to the traditional way of requesting for comments, the contents of revised appendices and monographs should be publicized on the website of the Chinese Pharmacopoeia Commission for three months, aiming at collecting comments widely from various institutions and organizations. All the feedbacks and inputs should be reviewed by the relevant subcommittee to ensure the feasibility and practicability of the standards and methods revised in this edition of Pharmacopoeia, and ensure that the principle of "openness, justice and fairness" is kept in the process of compiling and editing.

In order to make it easy for reading, *the Chinese Pharmacopoeia 2005* adopts the half-measure in its layout for the first time, and the improvement of quality in printing and binding makes this edition look more elegant.

Thanks to the well-organized work by the Secretariat of the Chinese Pharmacopoeia Commission, the joint efforts made by all the participants and the support from institutions and organizations concerned, the compilation of *the Chinese Pharmacopoeia 2005* proceeded smoothly and the goal is reached as designed despite the heavy work schedule and high requirements for the task. Now *the Chinese Pharmacopoeia 2005* is presenting its new style in front of the world and will play a greater role both in initiating new prospect of national drug administrative work and in the development of the medical industry in China.

郭俊英

Chairman, the eighth Chinese Pharmacopoeia
Commission of the People's Republic of China

(December 2004)

History of the Pharmacopoeia of the People's Republic of China

The Chinese Communist Party and the Chinese Government have attached great importance to medical and health care of the Chinese people. The People's Republic of China was founded on October 1, 1949 and right in November of that year the Ministry of Health convened a meeting of medical and pharmaceutical experts in Beijing on the compilation of a pharmacopoeia. In January 1950, the Ministry of Health invited Professor Meng Mudi, a well-known pharmacist from Shanghai, to take up the responsibility for the establishment of the Editorial Commission of Pharmacopoeia of China and its secretariat to deal with daily work concerning the compilation of such a compendium for new China.

In April 1950, a working seminar was held in Shanghai, at which the principles and guidelines on the selection of monographs were discussed and the monographs to be included in the Pharmacopoeia were decided. It was recommended under the direction of the Ministry of Health that the new Pharmacopoeia should be compiled in such a way that it is in conformity with the Chinese situations and that it should be nationalistic, scientific and popular in nature. Thereafter, The Ministry of Health invited 49 experts as members and 35 as correspondent members of the Commission who were appointed to 8 panels (nomenclature, chemicals, pharmaceutical preparations, medicaments of plant origins, biological products, medicaments of animal origins, pharmacology, and dosage) respectively. Health Minister Li Dequan served as the chairperson of the Commission. The first Editorial Commission of Pharmacopoeia of the People's Republic of China was thus formally established.

The first Editorial Commission meeting composed of all members was held in Beijing April 24-28, 1951, where resolutions were made on the title of the Pharmacopoeia, list of selected monographs, the nomenclatures, units of measurement and weights, format, the order of arrangement etc. Based on recommendations from the Commission meeting, the draft of the pharmacopoeia was then revised by the Secretariat and submitted to the Ministry of Health for review and the Culture and Education Commission of the State Council for approval at the end of 1952. The Ministry of Health published the first *Chinese Pharmacopoeia* in 1953.

The Chinese Pharmacopoeia 1953 edition contained 531 monographs of substances and articles, including 215 chemicals, 65 medicaments from plant origins, oils and fats, 13 medicaments from animal origins, 2 antibiotics, 25 biological products, and 211 pharmaceutical preparations. After the publication of the Pharmacopoeia the first addendum of the 1953 edition was published in 1957.

The Ministry of Health set up the second Chinese Pharmacopoeia Commission in 1955, with 49 members and 68 correspondent members. Due to various reasons, this Commission failed to fulfill its mission. The third Commission was established in 1957, with 80 members (no correspondent members appointed) and

Professor Tang Tenghan, a well-known pharmaceutical chemist, as its chairman. The first meeting of the third Commission was convened from July 28 to August 5 of the same year. Health Minister Li Dequan pointed out at the meeting that it was a big flaw that the first Pharmacopoeia did not cover Chinese traditional medicines that the Chinese people were so used to. At the meeting principles in compiling a Pharmacopoeia were made and nature and purpose of such a compendium were discussed and constitution of the Commission was revised. It was agreed unanimously to admit well-defined Chinese traditional medicines to the Pharmacopoeia. On August 27, six expert committees and a panel under the Commission were approved and set up by the Ministry of Health, namely, the committees of medicines, chemicals, pharmaceutical preparations, biochemicals, pharmacognosy and biological products, and a panel of nomenclature. Under the Commission a Standing Committee was organized, however, routine work in general was dealt with by its Secretariat.

In 1958, it was recommended by the Standing Committee and approved by the Ministry of Health to invite 8 doctors of Chinese traditional medicine and 3 experts of Chinese traditional medicaments as members of an expert committee dealing with the quality specifications of crude drugs used as Chinese traditional medicaments and Chinese patent preparations. Collaborative efforts were made by experts in this field in many parts of this country to incorporate the theory and practical experience of Chinese traditional medicine into the monographs concerned.

The second meeting of this Commission was held in Beijing from June 25 to July 5, 1959. A list of monographs being admitted to the new Pharmacopoeia was proposed and the draft texts reviewed in detail by the expert committees concerned. The work was accomplished in 1962. The State Council approved the publication of the Pharmacopoeia of the People's Republic of China 1963 edition. On January 26, 1965, the Ministry of Health issued a document for *the Chinese Pharmacopoeia 1963* edition and the relevant provisions for its implementation.

The Chinese Pharmacopoeia 1963 edition contained 1310 monographs in its two volumes, each with separated General Notices and relevant appendices. 446 monographs of commonly used Chinese traditional medicaments and 197 monographs of Chinese traditional patent preparations were admitted to Volume Ⅰ, and 667 monographs of chemical drugs were admitted to Volume Ⅱ. Additionally, "therapeutic function and chief indication" were stated in the monographs admitted to Volume Ⅰ and "action and use" of those admitted to Volume Ⅱ.

The Chinese Pharmacopoeia Commission stopped functioning in 1966 due to the turmoil caused by the "Cultural Revolution". On April 28, 1972, the State Council agreed to the suggestion in the report of the Ministry of Health that "the Commission should be re-established with the participation of Ministries of Health, Petroleum and Chemical industry, Commerce and the PLA's Ministry of Health, headed by the Ministry of Health". A working meeting of the Chinese Pharmacopoeia Commission was convened under the above direction from May 31 to June 10 of the same year in Beijing. 88 representatives of various competent authorities and organizations, including all Provincial (Autonomous regional or Municipal) Departments of Drug Policy and Management, Institutes for Drug Control and others attended the meeting. The focus of the meeting was on the guiding principle, working process, requirements and objects of the editing of the national Pharmacopoeia. The revision plan was recommended after exchange of past experiences in various aspects. Arrangements were made for the drafting of individual monographs by the organizations concerned. The second meeting of the Chinese Pharmacopoeia Commission was held

in Beijing in April 1973. Some guidelines, basic requirements of the Pharmacopoeia and sample monographs for Chinese traditional medicaments and modern medicinal substance as well as the respective explanatory notes had been well discussed and appropriate recommendations were made. The drafting of individual monographs was rearranged according to the place of origin of Chinese medicines and the conditions of pharmaceutical production. On October 4, 1979 the Ministry of Health promulgated that *the Chinese Pharmacopoeia 1977* edition would come into use on January 1, 1980. The total of monographs contained in the 1977 edition is 1925. In Volume Ⅰ, 1152 monographs were admitted, including 882 monographs of Chinese herbal drugs in general used and in the region of national minorities, extracts of Chinese herbal medicines, oils and fats and some preparation made of single medicinal ingredient. 270 monographs of Chinese traditional patent preparations (including those preparations used in the region of national minorities) were also admitted in the Volume Ⅰ. 773 monographs of chemicals and biological products etc. were admitted in Volume Ⅱ.

In 1979 the Ministry of Health invited 112 experts as members to form the fourth Chinese Pharmacopoeia Commission, and Health Minister Qian Xinzhong was its Chairman. The first plenary meeting of that Commission was held from Nov. 22 to Nov. 28 in the same year in Beijing. Discussion and amendment were made on the constitution of the commission, provisions for the management of specifications for pharmaceutical preparations and its working plan in the meeting. Ten specialized advisory groups were appointed in the fields of Chinese traditional medicine, Chinese traditional medicaments, medicine and pharmacology, chemicals, biochemicals, pharmaceutical preparations, antibiotics, biological products, radiopharmaceuticals and nomenclature respectively. Monographs being admitted to the new Pharmacopoeia were recommended by the advisory groups concerned. The advisory group on Chinese traditional medicine had the responsibility to review and select the range of monographs to be included in Volume Ⅰ and the advisory group on medicine and pharmacology had the same responsibility for Volume Ⅱ. The institutes for drug control and competent authorities or organizations in the locality (provinces, autonomous regions and municipalities), where the drug substance concerned was produced provided draft text of individual monograph with prominent experience and excellent quality. Coordinated review and technical validation were organized by the Secretariat. Some monographs were drafted only after the completion of objective collaborative studies as required. Finally, members of respective advisory groups and representatives of institutes for drug control and drug manufacturers concerned reviewed the draft text, and then sent to the Ministry of Heath for approval. *The Chinese Pharmacopoeia 1985* edition was published in September 1985 as planned. The effective date was set on April 1, 1986 as approved by the Ministry of Health. In this edition of Pharmacopoeia, 1489 monographs of drugs were admitted. 506 monographs of Chinese traditional medicaments, crude drugs, vegetable oils and fats and preparations of single ingredient, 207 monographs of Chinese traditional patent preparations, totally amount to 713 monographs were admitted to Volume Ⅰ. 776 monographs of chemicals, biological products etc. were admitted to Volume Ⅱ.

The "Drug Administration Law of the People's Republic of China" came into effect on July 1, 1985. It stipulated that "the quality of drugs and medicines must comply with a national, provincial, autonomous regional or municipal standard", and that "the Pharmacopoeia of People's Republic of China and standards for drugs and medicines published and promulgated by Ministry of Health of the State Council are national standards for drugs and medicines". It further stated, "The Chinese Pharmacopoeia Commission subordinate to the Ministry of Health of the State Council is responsible for the stipulation and revision of national standards for drugs and medicines". It defines clearly the official nature of standards for drugs

and medicines and responsibilities of the Commission.

In 1986 the Ministry of Health reorganized the Chinese Pharmacopoeia Commission in accordance with its constitution and invited 150 experts as members of the fifth Commission with Health Minister Cui Yueli as Chairman. The office dealing with routine work was changed to a system with the Secretary General as its chief executive officer. The first meeting of this Commission was convened May 5-8 of the same year. The constitution of the Commission was revised. Comments were made on the task of drug standardization during the seventh Five-year Plan for National Reconstruction. The guidelines and principles of the 1990 edition of the pharmacopoeia were discussed and agreed at the meeting. Panel meetings on Chinese traditional medicaments, Chinese patent preparations, chemicals, antibiotics, biochemicals and pharmacology were held respectively for the tasks of drafting different parts of the next edition and necessary research projects to be carried out. The addendum to *the Chinese Pharmacopoeia 1985* edition was published in November 1987 with 23 new admissions and 172 specific monographs and 21 general monographs were revised or amended. Based on *the Chinese Pharmacopoeia 1985* edition, its first English version was formally published in October 1988. Also published in that year were the selected notes in Volume Ⅱ. By March 1989, the draft text of the new pharmacopoeia was basically ready for comments through the efforts made by various organizations and associations. The Secretariat of the Chinese Pharmacopoeia Commission was authorized to organize reviewing and editing. In December 1989, an extended meeting attended by the chairman, vice-chairmen of the Commission and the chairmen of all advisory groups was held in Beijing. It was recommended to send the draft text to the Ministry of Health for comments and approval. The Ministry of Health then publishes it as *the Chinese Pharmacopoeia 1990* edition, on December 3, 1990 with effective date on July 1, 1991.

This new edition of the pharmacopoeia is still published in two volumes containing 1751 monographs of substances and articles. 784 monographs including 509 monographs of Chinese traditional medicaments and 275 monographs of Chinese traditional patent preparations and single ingredient preparations are admitted to Volume Ⅰ, while 967 monographs on chemicals, antibiotics, biological products and pharmaceutical preparations are admitted to Volume Ⅱ. In comparison with the preceding edition, 80 new monographs are admitted and 3 monographs deleted from Volume Ⅰ; 213 new monographs are admitted (including 5 monographs transferred from Volume Ⅰ to Volume Ⅱ) and 25 monographs deleted (3 from Volume Ⅰ and 22 from Volume Ⅱ). Appropriate changes have been made on titles of certain drug substances and articles as required. The headings "Action and use" and "Administration and dose" are changed to "Category" and "Dosage" respectively. "A Guide to Clinical Use of Drugs" was published as a companion volume to *the Chinese Pharmacopoeia* to serve as a guiding reference for medical and pharmaceutical practices. The infrared reference spectra are deleted from the Appendix with the publication of a separate volume—the Atlas of Infrared Spectra of Drugs.

The sixth Chinese Pharmacopoeia Commission was organized in 1991 with 168 members invited by the Ministry of Health, and Health Minister Chen Minzhang as its chairman. The first meeting of that Commission took place May 16-18 of the same year, attended by all members. In this meeting, the constitution of the Commission was further revised and the working plan for compilation and editing of *the Chinese Pharmacopoeia 1995* edition were discussed and substantial recommendations were made. A Standing Committee composed of the chairman, vice chairman and 11 other experts were set up with 13 subcommittees in respective specialized fields, namely, Chinese traditional medicine, Chinese traditional medicaments, Chinese traditional patent medicines, Modern medicine, Pharmacology, Chemicals Ⅰ, Ⅱ

and Ⅲ, Antibiotics, Biochemicals, Biological products, Radiopharmaceuticals and Nomenclature. The subcommittees then convened extended meetings in their specific fields, respectively, to work out the programs for revision of the Pharmacopoeia.

Drafts of the appendices of the 1995 edition were sent out in 1993 to relevant local organizations as a reference for the compilation and revision of the new edition. By July 1994 almost all local drafting had been finished and the subcommittees started organizing reviews. On Nov. 29, 1994 the drafts were discussed and further reviewed at an extended meeting of the Standing Committee, and then submitted to the Ministry of Health for approval. *The Chinese Pharmacopoeia 1995* edition came into use as of April 1, 1996 as promulgated by the Ministry of Health.

There are 2375 monographs in that edition. 920 monographs, including 522 monographs of Chinese traditional crude drugs and of oils and fats, 398 monographs of Chinese traditional patent medicines and of preparations of single ingredient were admitted to Volume Ⅰ. In Volume Ⅱ, it was composed of 1455 monographs of chemicals, antibiotics, biochemicals, radiopharmaceuticals, biological products and some excipients. In comparison with the previous edition, 142 and 499 new admissions were admitted in Volume Ⅰ, Ⅱ respectively. English titles of drugs and preparation were adopted in Volume Ⅱ and the Latin titles were deleted, while Chinese titles only use their official common names and no alternate names. The first Volume (1995 edition) of "Atlas of Infrared Spectra of Drugs and Medicines" was also compiled. "A Guide of Clinical Use of Drugs" was revised, and published together with the 1995 edition of *the Chinese Pharmacopoeia*. Ministry of Health approved that the "Indication" and "Dosage" in the later should be adopted as the basis for promotion of drug administration and management by competent authorities of drug management and drug manufacturing.

The sixth Chinese Pharmacopoeia Commission published the first and second addenda in 1992 and 1993, respectively. It also published "Commentary to Volume Ⅱ of *the Chinese Pharmacopoeia 1990* edition". "Selected Commentary to Volume Ⅰ of *the Chinese Pharmacopoeia 1990* edition", "Atlas of Traditional Chinese Medicines", "Atlas of Thin Layer Chromatography of Chinese Traditional Medicines" and "Adopted names of Chinese pharmaceutical products" as references in series relevant to pharmacopoeia. English version of *the Chinese Pharmacopoeia 1990* edition was published in July 1993.

To strengthen standardization of drugs and medicines, the Ministry of Health decided, on May 21, 1993, that the Secretariat of the Chinese Pharmacopoeia Commission separated from the National Institute for the Control of Pharmaceutical and Biological Products and subordinated directly to the Ministry of Health. That was an important reform measure in the restructuring of the Commission.

Approved by the Ministry of Health, the seventh Chinese Pharmacopoeia Commission was set up in May 1996. The Ministry invited 204 members, including 18 honorary members, to form the Commission. Health Minister Chen Minzhang served as its Chairman. In September 1998 as approved by Document No. 32 (1998) of Central Office of Organization, the name of Pharmacopoeia Commission of the Ministry of Health was changed to the Chinese Pharmacopoeia Commission, and the administration of the Commission was transferred to the State Drug Administration (SDA). After change of the management system and passing away of Health Minister Chen Minzhang, the Standing Committee of the seventh Pharmacopoeia Commission decided to appoint chairman and vice chairmen of the Commission, as so stipulated in its Constitution in December 1999. Under that Commission there were 16 specialty

subcommittees: Chinese traditional medicine, Chinese traditional medicaments Ⅰ, Ⅱ, Ⅲ, and Ⅳ, modern medicine, nomenclature, appendices, pharmaceutical preparations, pharmacology, chemicals Ⅰ and Ⅱ, antibiotics, biochemicals, radiopharmaceuticals and biological products.

The first meeting of the seventh Commission was held in 1996, at which the design plans for the 2000 edition of *the Chinese Pharmacopoeia* were endorsed. The guiding principles decided were that the Volume Ⅰ should have special features in content and its quality should be largely improved, and the Volume Ⅱ should reflect the combination of improvement and suitability to specific situations in China as well as a combination of advancement and characteristics. As scheduled in the plans, all subcommittees convened their own meetings and carried out their tasks starting from October 1996. By the end of 1997, all revision of the appendixes and general rules for drug and medicine preparations had been finished and sent to local drafting organizations for comments. A first draft was finalized at the end of 1998, and after reviews by related organizations in different parts of China; the 16 subcommittees further reviewed it by the end of October 1999. *The Chinese Pharmacopoeia 2000* edition was finally reviewed and passed by the seventh Chinese Pharmacopoeia Commission in December 1999, and submitted to the State Drug Administration for approval of publication. This edition was published in January 2000 and come into effect from July 1, 2000.

The 2000 edition contains a total of 2691 monographs, with 992 ones in Volume Ⅰ and 1699 in Volume Ⅱ. There are 399 new monographs and 562 revised ones in this edition. Appendices have been considerably improved. There are 10 new and 31 revised appendices in Volume Ⅰ, and 27 new and 32 revised ones in Volume Ⅱ. The Volume Ⅱ has, for the first time, included 6 guidelines for Validation of Analytical Method Adopted in Pharmaceutical Quality Specification etc., which will play a role in the standardization and regulation of testing methods. Application of modern analytical techniques is further enhanced and stressed in this edition.

The seventh Chinese Pharmacopoeia Commission has also compiled the 1997 and the 1998 addendum of *the Chinese Pharmacopoeia 1995* edition, the "Adopted Names of Chinese Pharmaceutical Products (1998 Addendum)", "Atlas of Infrared Spectra of Drugs and Medicines" (Volume Ⅱ) and the third edition of "A Guide to Clinical Use of Drugs". The English edition of *the Chinese Pharmacopoeia 1995* was published in 1997. To strengthen exchanges and cooperation, this Commission has decided to publish concurrently both Chinese and English versions of *the Chinese Pharmacopoeia 2000* edition.

"Dosage" and "Precaution" in preceding editions are too simple to reflect accurately the actual clinical use of drugs therefore deleted from this edition (Volume Ⅱ) as so proposed in the design plans for the relevant contents of those two headings have been included in "A Guide to Clinical Use of Drugs".

Approved by the State Drug Administration (redesigned to be State Food and Drug Administration in September 2003), the eighth Chinese Pharmacopoeia Commission was set up in October 2002. The State Drug Administration invited 312 experts as members of the Commission and did not appoint any honorary member. The Commissioner of the State Drug Administration, Mr. Zheng Xiaoyu served as its Chairman. The Standing Committee of the Commission was assigned as Executive Committee. The plenary session of the Chinese Pharmacopoeia Commission was authorized to examine and approve *the Chinese Pharmacopoeia* and the important items of the national specifications for pharmaceutical preparations. 24 subcommittees of specific duty and/or appointment are set up under the Commission. On the basis of previous Commission, 3 new subcommittees were established: namely ethnic medicines, microorganism, and packing materials and excipients; former subcommittee of biological products was expanded to 6 ones,

namely: blood products, viral vaccines, bacterial vaccines, somatic cell therapy and gene therapy, recombinant DNA products and diagnostic reagents for *in vivo test*.

The first meeting of the eighth Chinese Pharmacopoeia Commission and its Executive Committee took place in October 2002, approved "the design plans for the 2005 edition of *the Chinese Pharmacopoeia*". The design plans clearly indicated that the *Pharmacopoeia* should adhere to guiding principles of "succession and development" and "theory combined with practice"; and editing principles of pharmacopoeia should be adhered to scientific, practical and specifical basis. The meeting decided that *Requirements for Biologics of the People's Republic of China*, known as the *Chinese Requirements for Biologics* (CBR), would be integrated into the pharmacopoeia as its Volume Ⅲ; "A Guide to Clinical Use of Traditional Chinese Patent Preparations" is to be compiled for the first time.

All designated subcommittee meetings have been convened since November 2002, to deal with the assigned duty recommended on the meeting in various aspects. By July 2003, the draft of appendices was accomplished at first and sent to relevant authorities and institutions for comments. Early in 2004, the first draft of appendices and text of pharmaceutical and biological products was basically ready and consecutively published on the website of the Chinese Pharmacopoeia Commission for 3 months, so as to get the feedbacks from various organizations and associations. Subcommittees, one after the other, convened meetings to review and revise the drafts from June to August, the Executive Committee of eighth Chinese Pharmacopoeia Commission endorsed *the Chinese Pharmacopoeia 2005* in September of the same year. In December 2004, the draft text was sent to the State Food and Drug Administration for approval and promulgation. *The Chinese Pharmacopoeia 2005* was published on January 2005 with effective date on July 1, 2005. The number of monographs in *the Chinese Pharmacopoeia 2005* is considerably increased. It contains up to 3214 monographs of drugs and other articles with 525 new admissions. Volume Ⅰ contains 1146 monographs, with 154 new admissions and 453 revised; Volume Ⅱ deals with 1967 monographs, with 328 new admissions and 522 revised; Volume Ⅲ contains 101 monographs, with 44 new admissions and 57 revised. 9 monographs adopted in *the Chinese Pharmacopoeia 2000* are deleted in this edition. 123 monographs adopted in the *Requirements for Biologics of the People's Republic of China 2000* and in its *Supplement 2002* are not admitted in this edition.

The numbers of appendices in this edition are as follows: 98 monographs admitted in Volume Ⅰ with 12 new admissions, 31 revised and 1 deleted; 137 monographs in Volume Ⅱ with 13 new admissions, 65 revised and 1 deleted; 140 monographs in Volume Ⅲ with 62 new admissions, 78 revised and 1 deleted. Appropriate monographs common to all three volumes are presented in each volume respectively in a harmonized and unified form.

Under the active leadership of the Chairman of the Chinese Pharmacopoeia Commission, the issue of pharmaceutical safety is emphasized particularly. In Volume Ⅰ, atomic absorption spectrophotometry and inductively coupled plasma mass spectrometry are applied to determine the deleterious elements (lead, cadmium, mercury, arsenic and cuppers) and the limits of these elements have been stipulated; the guidelines of the safety test for the injections of traditional Chinese medicines is also added to the Volume Ⅰ. In Volume Ⅱ, the Test for Particulate Matter in Injections is applied to 126 injections intended for intravenous injections; the number of monographs adopting the Test for Bacterial Endotoxin reaches 112; the Determination of Residual Solvents includes the requirements of International Conference on

Niuhuang Shangqing Jiaonang
Niuhuang Xiaoyan Pian
Niuhuang Zhibao Wan
Qinbaohong Zhike Pian
Qinghuo Zhimai Pian
Qingkailing Zhusheye
Qinglin Keli
Qingyin Wan
QiyeShen'an Pian
Qizhi Weitong Keli
Renshen Zaizao Wan
Sanbao Jiaonang
Sangju Ganmao Pian
Sanqi Pian
Shangtongning Pian
Shanju Jiangya Pian
Shenqi Wuweizi Pian
Shexiang Qutong Qiwuji
Shexiang Zhichuang Shuan
Shidi Shui
Shuangdan Koufuye
Shuanghuanglian Pian
Songling Xuemaikang Jiaonang
Tongru Keli
Tongtian Koufuye
Tongxinluo Jiaonang
Wantong Yankang Pian
Wanying Jiaonang
Weikangling Jiaonang
Weishuning Keli
Wuling Jiaonang
Xiao'er Baibu Zhike Tangjiang
Xiao'er Feire Kechuan Koufuye
Xiao'er Fuxiening Tangjiang
Xiao'er Kechuan Keli
Xiaochaihu Keli
Xiaochaihu Pian
Xiaojianzhong Keli
Xiaomi Shuan
Xiaoshuan Tongluo Jiaonang
Xinning Pian
Xinqin Keli
Xueshuan Xinmaining Jiaonang
Xuhan Weitong Keli
Xuzhiling Pian
Yangyin Qingfei Wan
Yejuhua Shuan
Yiganning Keli
Yinqiao Jiedu Jiaonang
Yinqiao Shuangjie Shuan
Yinxingye Pian
Yinxu Weitong Keli
Yiqi Yangxue koufuye
Yixin Tongmai Keli
Zaizao Shengxue Pian
Zhennaoning Jiaonang
Zhikang Pian
Zhimaikang Jiaonang
Zhitong Huazheng Jiaonang
Zhongfeng Huichun Pian
Zhonghua Dieda Wan
Zhuanggu Shenjin Jiaonang
Zuojin Jiaonang

Appendices

I Q Adhesive plasters
VI F Capillary Electrophoresis
IX B Determination of Lead (Pb), Cadmium (Cd), Arsenic (As), Mercury (Hg) and Copper (Cu)
XI B Determination of Particle Size
XI C Test for Visible Particles
XI D Inductively-coupled Plasma Mass Spectrography
XII D Determination of Plaster Softening Point
XII E Determination of Emplastrum Adhesion
XIII D Test for Bacterial Endotoxin
XVI Sterilization
XVIII A The Guiding Principles for the Analytic Method Validation of Medicine Quality Standard
XVIII B Guidelines for Application of Safety Tests for Injection of Traditional Cinese Medicine

Omissions or Adjustments Included in Volume Ⅰ (2000 Edition)

Monographs

Caulis Aristolochiae Manshuriensis

Radix Aristolochiae

Radix Aristolochiae Fangchi

Appendices

Ⅴ B Colourimetry (incorporated Ⅴ A Ultraviolet Spectrophotometry and Clourimetry)

Ⅸ B Determination of Scraps

"Practical insoluble or insoluble" refers to that 1 g (ml) of solute is not soluble completely in 10000 ml of solvent.

Testing method Unless specified otherwise, weigh out finely powdered sample or measure an amount of liquid sample, place the sample in a certain volume of the solvent at a temperature of 25℃±2℃, shake strongly for 30 seconds at an interval of 5 minutes. Observe the solubility behavior for 30 minutes. It is considered to be completely soluble, if none of the particles or droplet of the solute is observed.

(3) Physical constants or parameters including relative density, distilling range, melting point or melting range, congealing point, specific rotation, refractive index, viscosity, specific absorbance, iodine value, saponification value and acid value etc., are useful for tests for identification and give some indication of the drug purity. It is one of the chief criteria for appraisal and assessment of drug quality.

9. Identification refers to identification by experience, microscopical physical and chemical examinations. Transectional, external and powder observations under microscope indicate the microscopical characteristics of the sample prepared with specific process.

10. Test section under the monograph includes tests or observations of impurities being tested for efficacy, homogenicity, quality and safety of the various tests are framed from the impurities possibly existed and produced by validated manufacturing process and normal storage condition.
All preparations, unless specified otherwise, must comply with the general requirements stated under the general requirements for preparations of the pharmacopoeia.
The "single dose package" in the general requirements of the preparations refers to the package of drug with dose for once administration specified in the monograph. Those drugs specified the dose range of administration in the usage and dosage, or its dose of one package being less than that of once administration, must be tested as single dose package.

11. The crude drugs refer to that requires no processing, and should be treated according to the statement of "cleaning" described in the general requirement of "Processing of crude drugs" in the Appendices. Certain poisonous or highly potent crude drugs or crudc drugs being used without processing, in particular, must be expressed clearly to avoid any mistake.

12. Characteristics and channel tropism of crude drugs are general statements based on theory and practice of Chinese traditional medicine.

13. Action and indications of crude drugs and preparations are generalized statements of the theory and practice in using traditional compound preparations in Chinese traditional medicine, new indications may well be adopted on long term medical practical experiences, and this requirement is stated for reference in drug usage.

14. The usage of crude drugs, unless specified otherwise, applies to a decoction or cook with water and taken orally. Dosage states the usual daily dose for adults, and it may be increased or decrease, if necessary.

15. The contraindications or adverse reactions stated under "Precaution" indicates the main contraindications and adverse reactions, excluding from those commonly occurrence of side effects as observed by the Chinese traditional medical physician.

16. Storage refers to the basic conditions for storage and preservation of a drug. Mineral drugs should be stored in dry, clean place. It is stated by the following terms:

"Protected from light" refers to that a drug should be kept in light resistant container such as amber coloured container, or a colourless transparent or semitransparent container wrapped with black paper;

"Well closed" refers to that the container is able to protect the content from extraneous matters or lose of contents on normal handling condition;

"Tightly closed" refers to that the container should be able to protect the contents from efflorescence, deliquescence, volatilization or interference of extraneous matters;

"Hermetically sealed" or "Tightly sealed" refers to that the container is sealed on fusion or sealed tightly with suitable material to protect against contamination and from permeability of air and moisture;

"Cool place" refers to that the storage temperature is not exceeding 20℃;

"Cool and dark place" refers to that the container is kept in the dark place, protected from light and the ambient temperature is not exceeding 20℃;

"Cold place" refers to that the container is kept at ambient temperature of 2-10℃.

"Normal temperature" refers to that the container is kept at ambient temperature of 10-30℃.

If no specification on temperature in storage of monograph, the temperature refers to normal temperature.

17. The crude drugs, excipients and adjuvants used in preparations or dosage forms should comply with the requirements of this edition of Pharmacopoeia. The crude drugs not admitted to this edition of pharmacopoeia, which should comply with the requirements approved by competent authorities of drug quality control or provincial, autonomous regional or municipal drug quality control departments. For the excipients not admitted in this edition of Pharmacopoeia, their specification should be established, which should comply with requirements for pharmaceutical use and be approved by the drug regulatory authority of the state council.

The same crude drug used in different preparations (especially various administration routes) should comply with the quality control corresponding to clinic practice.

18. The crude drugs in formulated preparations refer to clean crude drugs. Processed crude drugs, unless specified otherwise, should be made by the processing procedure of the drug concerned. The dosage stated in formulated preparation refers to the dosage of clean crude drug or powdered processed crude drug.

19. Certain preparations are stated by the title of the drug in part, some are stated without dosage as well as without procedure.

Testing methods and Limits

20. The drugs and preparations should be tested with official methods stated in the pharmacopoeia. It is not precluded from the application of alternative methods, if they have been proved to be satisfactory in comparison with official methods accordingly. In case of doubt or dispute, the methods of Pharmacopoeia are authoritative for judgement.

21. Purity requirements and limits of purity of a drug as well as the weight (or content) variation of a preparation or dosage form stated in the monograph concerned include the values of upper and lower limits and the medium value. Whether these values are expressed in percentage or in absolute

numerical value, the last decimal is a significant value.

In calculating of testing result, the last effective figure is measured in one decimal place more than the significant decimal place indicated in the requirement and round up or down to the specified decimal place by the rule of commensuration.

22. The percentage content of the drug is calculated by weight, unless specified otherwise. If an upper limit of the content of a drug is stated as over 100%, it refers to a value possibly obtained by the assigned assay method in the monograph, representing the limit or permissible deviation stated in the Pharmacopoeia. In case of no upper limit is stated, the upper limit is considered to be not more than the equivalent amount of 101.0%.

The limit range of content of a preparation or dosage form is assigned on the basis of contents of active ingredient or ingredients, assay method being applied and possible change occurred in the process of manufacturing and/or storage. A 100% labelled amount of active ingredient or ingredients should be used in manufacturing process.

Chemical Reference Substances, Reference Drugs, Reference Extractives, Reference Standards

23. Chemical reference substances, reference drugs, reference extractives, reference standards excluding of internal standards used in chromatographic methods refer to the standard materials used in testing of identification, test and assay. Those are established, standardized and distributed by the institution designated by the institution designated by the drug regulatory authority of the State Council.

Chemical reference substances, unless specified otherwise, should be dried in a constant vacuum desiccator with phosphorus pentoxide for at least 12 hours for use.

The establishment or alteration in unit of potency or content of reference standards and chemical reference substances should be conduct in comparison with original reference standard, chemical reference substances or International Reference Standard by collaborative standardization, and the protocol and testing results should be reviewed and approved by audit process.

Chemical reference substances, reference drugs, reference standards are distributed with appropriate instruction insert to state the method of usage, quality specification, expiry date and amount or content of the standard material concerned.

Units of Measurement

24. The measuring apparatus used for tests and assays should comply with the relevant requirements promulgated by the technical supervision authority of the State Council.

25. The units of measurement in this edition of Pharmacopoeia:

(1) The official names and symbols of units of measurement are listed as follows: Units of length: meter m; decimeter dm; centimeter cm; millimeter mm; micrometer μm; nanometer nm.

Units of volume: liter (L); milliliter (ml); microliter (μl)

Units of mass (weight): kilogram (kg); gram (g); milligram (mg); microgram (μg)

Units of pressure: pascal (Pa); kilopascal (kPa); megapascal (MPa)

Units of kinetic viscosity: pascal seconds (Pa • s)

Units of kinematic viscosity: square millimeter per second (mm^2/s) Units of wave number: reciprocal of centimeter (cm^{-1})

Units of density: kilogram per cubic meter (kg/m^3); gram per cubic centimeter (g/cm^3)

Units of radioactivity: becquerel (Bq); kilobecquerel (kBq); megabecquerel (MBq)

(2) Where the strengths or concentrations of the volumetric solutions and test solutions are expressed

in terms of mol/L in this edition of Pharmacopoeia, the expression of "XXX volumetric solution (YYY mol/L)" is adopted for the volumetric solution which should be accurately standardized. The expression of "YYY mol/L XXX solution" is adopted for solutions of other purpose without specific accuracy of their concentration.

(3) Temperature is expressed in ℃ (degree Celsius).

The temperature of a *Water bath* is 98-100℃, unless specified otherwise;

Hot water refers to that at a temperature of 70-80℃;

Slightly warm or Warm water refers to that at a temperature of 40-50℃;

Room temperature refers to that at a temperature of 10-30℃;

Cold water refers to that at a temperature of 2-10℃;

Ice bath refers to the bath temperature is kept at about 0℃;

Allow to cool refers to that the object is cooled to room temperature;

(4) The symbol used for the expression of percentage is %, usually by weight, but the percentage of solutions, unless specified otherwise, refers to the number of grams of solute in 100 ml of the solution. The percentage of ethanol refers to percentage by volume at 20℃.

The following symbols may be used when needed:

% (g/g) expresses the number of grams of a solute in 100 g of solution;

% (ml/ml) expresses the number of milliliters of a solute in 100 ml of solution;

% (ml/g) expresses the number of milliliters of a solute in 100 g of solution;

% (g/ml) expresses the number of grams of a solute in 100 ml of solution.

(5) The Drop of a liquid refers to that 1.0 ml of water is equivalent to 20 drops at the temperature of 20℃.

(6) The expression " (1→10)" stated under the solution refers to a solution of 10 ml produced by adding sufficient quantity of solvent to dissolve 1.0 g or 1.0 ml of a solute. It is understood to be aqueous solution, if the solvent is not specified. In case of two or more solvents are used as a mixture, a hyphen is inserted between different solvents indicated by names, the parenthesis followed expresses the proportion of each solvent by volume in the mixture.

(7) Sieves of Chinese National Standard R40/3 series are adopted in the Pharmacopoeia and the numbers are assigned as follows:

Sieve No.	Average internal diameter of aperture (μm)	Mesh No.
1	2000±70	10
2	850±29	24
3	355±13	50
4	250±9.9	65
5	180±7.6	80
6	150±6.6	100
7	125±5.8	120
8	90±4.6	150
9	75±4.1	200

Powders are graded as follows:

Very coarse All particles pass through No. 1 sieve, not more than 20% pass through No. 3 sieve;

Coarse All particles pass through No. 2 sieve, not more than 40% pass through No. 4 sieve;

Medium All particles pass through No. 4 sieve, not more than 60% pass through No. 5 sieve;

Fine All particles pass through No. 5 sieve, not less than 95% pass through No. 6 sieve;

Very fine All particles pass through No. 6 sieve, not less than 95% pass through No. 7 sieve;

Ultra fine All particles pass through No. 8 sieve, not less than 95% pass through No. 9 sieve.

(8) Ethanol refers to that of 95% (ml/ml) in strength, unless specified otherwise.

26. The atomic weights adopted for calculating the molecular weights and the conversion factors are the values recently published by the International Union of Pure and Applied Chemistry.

Precision and Accuracy

27. The accuracy of sampling quantity and precision of testing are defined in this edition of Pharmacopoeia.

(1) The quantity obtained by weighing or measuring the substance being examined and reagent being used is expressed in Arabic figures. The required precision is expressed by the significant numerical place. For example, the measurement of "0.1 g" by weight, refers to that 0.06-0.14 g of the substance may be weighed; for "2 g", 1.5-2.5 g of the substance may be weighed; for "2.0 g", it refers to 1.95-2.05 g of the substance may be weighed; for "2.00 g", it refers to that 1.995-2.005 g of the substance may be weighed.

Weigh accurately indicates that the precision of measurement should be made to an accuracy of 0.1%; *weigh* indicates that an accuracy being made to 1%. *Measure accurately* indicates the accuracy of the volume being measured complies with the national standard of pipet being used for the measurement of required volume; *Measure* indicates that the measuring cylinder or other measuring apparatus being used complies with requirements for the measurement of volume to the significant numerical place. The word *about* states that the measuring quantity should not exceed±10% of the specified quantity.

(2) *Constant weight*, unless specified otherwise, refers to that the drying or ignition of a substance or material in two consecutive weighings do not differ by more than 0.3 mg. The second and subsequent weighing are made after an additional hour of drying each time under the similar condition. The second weighing of the substance or material made to constant weight by ignition is made after 30 minutes under similar condition.

(3) The expression of *calculated on the dried (anhydrous or solvent free) basis* indicates that, unless specified otherwise, the undried substance or solvent containing substance is used for the required testing. The result of "Loss on dying (moisture or solvent)" should be subtracted from the amount of substance.

(4) *Blank test* refers to a test carried out in the similar manner without the substance being examined or using same amount of solvent instead of the solution being tested. The statement of *to make any necessary correction of the result with a blank test* refers to that the result is calculated by subtracting number of milliliters of titrant used in blank test from that consumed in assay of the substance being examined.

(5) The temperature for a test is at room temperature whenever the temperature is not stated. In case of that the temperature variation influences significantly to the testing result, the test should be carried out at a temperature of 25℃±2℃, unless specified otherwise.

Reagents, Test solutions and Indicators

28. Reagents used in tests and assays, unless specified otherwise, should comply with the requirements stated in the Appendix of the Pharmacopoeia. Different grades of reagents conform to national standards or those issued by the competent authorities may be used of choice. Test solutions, buffer solutions, indicator solutions, volumetric solutions and so on should comply with the statements or be prepared as directed in the Appendix of the Pharmacopoeia.

29. Water being used in tests and assays refer to purified water. Water being used for the test of acidity or alkalinity is of the water freshly boiled and cooled to room temperature.

30. Test for acidity or alkalinity of a solution without the statement of indicator being used refers to that Litmus paper is used.

Animal Test

31. Laboratory animals used and managed in animal tests should comply with the requirements stipulated and promulgated by competent authorities of the State Council.
The strain, age, sex etc., should comply with the requirements for quality control of drugs and biological products.
The animal tests should be adopted only in necessary condition and become less popular, as for the purity of drugs raise to higher level and more precise chemical, physical or cellular method should be applied to replace the animal test as much as possible for the quality control of drugs and biological products.

Insert sheet, Package and Labelling

32. The insert sheet of drugs should be in conformity with the requirements of "The Drug Administration Law of the People's Republic of China", and provisions for insert sheet promulgated by the drug regulatory authority of the State Council.

33. The immediate packaging materials and containers should be in conformity with the relevant provisions promulgated by the drug regulatory authority of the State Council. The immediate packaging materials and containers must be innocuous, clean, not interact with the drugs being packed, and do not affect the drug quality in the containers.

34. Labelling of drugs must comply with the requirements of "The Drug Administration Law of The People's Republic of China", and the provisions for the package and labelling promulgated by the drug regulatory authority of the State Council. The content of the labelling for different packaging should be printed in accord with the above requirement, in which the drug information should be provided as more as possible.

35. A stated mark should be printed on the insert sheet and the labelling of package for narcotics, psychological drugs, toxic drugs for medical use, radioactive drugs, drugs for external use and nonprescription drugs.

MONOGRAPHS
PART I

Chinese Materia Medica and Prepared Slices of Chinese Crude Drugs

Agkistrodon
(蕲蛇, Qishe)

Long-nosed Pit Viper

Long-nosed Pit Viper is the dried body of *Agkistrodon acutus* (Güenther) (Fam. Viperidae). The drug is collected in summer or autumn, opened in the abdomen, removed from the viscera, washed clean, held open with bamboo piece, coiled up in disc-shape. The bamboo piece is removed after being dried.

Description In coiled up disc, 17-34 cm in diameter, the body up to 2 m long. The head, located in the centre of the disc, slightly raised upward, triangular and flattened, tip of the snout upward, commonly known as "Qiaobitou (upward nose)". Upper jaw with tubular fangs, sharp and hollow. Each side of the dorsum bearing 17-25 V-shaped stripe patterns alternated blackish-brown with light brown, both upper ends of the "V" stripe patterns contacted at the mid-dorsal line and forming a square stripe pattern, commonly known as "Fangshengwen". Some of the "V" stripe patterns not exactly contacted with those on the other side, and arranged alternatively. The abdomen opened or not, greyish-white. Scales relatively large, with black subrounded spots, commonly known as "Lianzhuban (a patch like a string of beads)". The inner wall of the abdomen yellowish-white, the spinous process of the vertebrae relatively high, projected upward in shape of a blade, anterior and posterior hypapophysis similar in shape, mostly falcate, inclined posteriorly, tip obviously beyond the convex hind surface of the centrum. The tail tapered abruptly, with one dark grey triangular horny scale at the end. Odour, stinking; taste, slightly salty.

Extractives Carry out the method for determination of ethanol-soluble extractives (Appendix X A, the hot extraction method), using dilute ethanol as the solvent, not less than 10.0 per cent.

Processing *Agkistrodon* Remove from the head and scales, and cut into sections of about 3 cm long.

Agkistrodon Flesh Remove from the head, soften thoroughly with yellow rice wine, eliminate the scales and bones, and dry.

Agkistrodon (processed with wine) Stir-bake the clean sections of Agkistrodon with yellow rice wine as described under the method for stir-baking with wine (Appendix II D) to dryness, using 20 kg of yellow rice wine per 100 kg of Agkistrodon.

Action To dispel *wind*, remove obstruction of *channels* and *collaterals*, and arrest spasm.

Indications Chronic rheumatic or rheumatoid arthritis with numbness and contracture; hemiplegia in stroke; convulsion, tetanus; leprosy, scabies and ringworm.

Usage and dosage 3-9 g; 1-1.5 g, ground into powder and taken with water, 2-3 times a day.

Storage Preserve in a dry place, protected from mould and moth.

Aloe
(芦荟, Luhui)

Aloes

Aloes is the dried concentrated matter obtained from the juice of the leaf of *Aloe barbadensis* Miller, *Aloe ferox* Miller or other species of the same genus. *Aloe barbadensis* is habitually known as "Old Aloes" and *Aloe ferox* is known as "New Aloes".

Description *Old Aloes* Irregular pieces, often broken, polygonal, varying in size. Externally dark reddish-brown or dark borwn, lusterless. Texture light and hard, uneasily broken, fracture rough or with pockmarked striations; hygroscopic. Odour, characteristic; taste, very bitter.

New Aloes Externally dark brown, slightly green, lustrous. Texture light and lax, easily broken; fracture glassy, with striations.

Identification (1) To 0.5 g of the powder, add 50 ml of water, shake thoroughly, filter. To 5 ml of the filtrate add 0.2 g of borax, heat to dissolve. To several drops of the solution add 30 ml of water, mix well, a green fluorescence is produced. Examine under ultra-violet light at 365 nm, a light yellow fluorescence is produced. To 2 ml of the filtrate, add 2 ml of nitric acid, mix well, a brownish-red colour is produced for *Aloe barbadensis*, and a yellowish-green colour for *Aloe ferox*. To 2 ml of the filtrate, add an equal volume of saturated bromine water, a yellow precipitate is produced.

(2) To 0.1 g of the powder, add 5 ml of ferric chloride TS and 5 ml of dilute hydrochloric acid, shake thoroughly, heat on a water bath for 5 minutes. Allow to cool, add 10 ml of carbon tetrachloride, shake slowly for 1 minute. To 6 ml of carbon tetrachloride solution add 3 ml of ammonia TS, shake, a rose-red to cherry-red colour is produced in the ammonia layer.

(3) To 0.5 g of the powder, add 20 ml of methanol, boil on a water bath, shake for several minutes and filter, use the filtrate as the test solution. Dissolve aloin CRS in methanol to prepare a solution containing 5 mg per ml as the reference solution. Carry out the method for thin layer chromatography (Appendix VI B), using silica gel G as the coating substance and a mixture of ethyl acetate, methanol and water (100 : 17 : 13) as the mobile phase. Apply separately to the plate 5 μl of each of the two solutions. After developing and removal of the plate, dry in air and spray with 10% solution of potassium hydroxide in methanol. Examine under ultra-violet light at 365 nm. A fluorescent spot in the chromatogram obtained with the test solution corresponds in position and colour to the fluorescent spot in the chromatogram obtained with the reference solution.

Water Carry out the determination of water (Appendix IX H, method 1), not more than 12.0 per cent.

Total Ash Not more than 4.0 per cent (Appendix IX K).

Acid-insoluble ash Not more than 1.0 per cent (Appendix IX K).

Extractives Carry out the hot extraction method for determination of ethanol-soluble extractives (Appendix X A), using ethanol as the solvent, not less than 60.0 per cent.

Assay Carry out the method for high performance liquid

chromatography (Appendix Ⅵ D).

Chromatographic system and system suitability Use a column packed with octadecylsilane bonded silica gel as the stationary phase and the mixture of acetonitrile-water (25 : 75) as mobile phase. As detector a spectrophotometer set at 355 nm. The number of the theoretical plate of the column is not less than 2000, calculated with the reference to the peak of aloin.

Reference solution dissolve barbaloin, accurately weighed, in methanol to produce a methanol solution containing 0.2 mg of barbaloin per ml, mix well.

Test solution Place 0.1 g of the power (through No. 5 sieves) of *Aloe barbadensis* or 0.2 g of the powder of *Aloe ferox*, accurately weighed, to a 100 ml volumetric flask, add a quantity of methanol, ultrasonicate for 30 minutes, cool, add methanol to volume, mix well, filter, as the test solution.

Procedure Inject accurately 10 μl of the reference solution and of the test solution respectively into the column, and calculate the contents.
It contains not less than 18.0 per cent of aloin for *Aloe barbadensis*, and not less than 6.0 per cent of aloin for *Aloe ferox*, calculated with reference to the dried drug.

Processing Cut to small pieces.

Action To remove *heat* from the liver, and relax the bowels.

Indications Constipation; infantile malnutrition due to improper feeding and convulsion; external use for eczema and ringworm.

Usage and dosage 2-5 g; for external use, appropriate quantity is ground into powder and applied topically.

Storage Preserve in a cool and dry place.

Alumen
(白矾, Baifan)

Alum

Alum is a processed mineral of sulfates of alum-stone, containing mainly potassium aluminium sulfate [$KAl(SO_4)_2 \cdot 12H_2O$].

Description Irregular masses or granular, colourless or pale yellowish-white, transparent or translucent. Externally somewhat smooth or uneven, with fine and dense longitudinal ridges, and glassy lustre. Texture hard and fragile. Odour, slight; taste, sour, slightly sweet and extremely astringent.

Identification The aqueous solution yields the reactions characteristic of aluminium salts, potassium salts and sulfates (Appendix Ⅳ).

Ammonium salts Dissolve 0.1 g of the drug in 100 ml of ammonia-free water. Transfer 10 ml of the solution to a Nessler tube, add 40 ml of ammonia-free water and 2 ml of alkaline mercuric potassium iodide TS, any colour produced is not more intense than that of a mixture of 1 ml of ammonium chloride solution (dissolve 31.5 mg of ammonium chloride in 1000 ml of ammonia-free water), 2 ml of alkaline mercuric potassium iodide TS and 49 ml of ammonia-free water.

Copper and Zinc To 1 g of the drug add 100 ml of water and slight excess of ammonia TS, boil and filter, the filtrate should not be blue. Acidify the filtrate with acetic acid, add hydrogen sulfide TS, it should not be turbid.

Iron Dissolve 0.35 g of the drug in 20 ml of water, add 2 drops of nitric acid, boil for 5 minutes, neutralize with sodium hydroxide TS to produce slight turbidity, add 1 ml of dilute hydrochloric acid TS, 1 ml of potassium ferrocyanide TS and sufficient quantity of water to 50 ml, mix well, no blue colour is produced within 1 hour.

Heavy metals Dissolve 1 g of the drug in 2 ml of dilute acetic acid TS and a quantity of water to 25 ml, carry out the limit test for heavy metals (Appendix Ⅸ E, method 1): not more than 20 ppm.

Assay Dissolve about 0.3 g of the drug, accurately weighed, in 20 ml of water, add 20 ml of acetic acid-ammonium acetate BS (pH 6.0), and 25 ml of disodium edetate (0.05 mol/L) VS, accurately measured, boil for 3-5 minutes, cool. Add 1 ml of xylenol orange IS and titrate with zinc solution (0.05 mol/L) VS until the colour turns from yellow to red. Perform a blank determination and make any necessary correction. Each ml of disodium edetate (0.05 mol/L) VS is equivalent to 23.72 mg of potassium aluminium sulfate [$KAl(SO_4)_2 \cdot 12H_2O$].
It contains not less than 99.0 per cent of potassium aluminium sulfate [$KAl(SO_4)_2 \cdot 12H_2O$].

Processing *Alumen* Eliminate foreign matter, break to pieces before use.

Alumen (calcined) Calcine the clean Alumen as described under the method for calcining openly (Appendix Ⅱ D) to lax and fragile.

Action To counteract toxicity, kill parasites, arrest discharges, and relieve itching by external use; to arrest bleeding, relieve diarrhea, and dispel *wind-phlegm* by internal adminstration.

Alumen (calcined) To arrest discharge, promote the healing of ulcers, arrest bleeding, and resolve putridity.

Indications External use for eczema, scabies, otitis media with purulent discharge; internal use for chronic diarrhea, hematochezia, abnormal uterine bleeding, epilepsy and mania.

Alumen (calcined) Eczema, discharge from ulcers otitis media with purulent discharge, excessive leukorrhea with pudendal itching, bleeding from the nose or gums; nasal polyp.

Usage and dosage For external use, appropriate quantity is ground into powder for topical application or dissolved in water for washing; 0.6-1.5 g for oral administration.

Storage Preserve in a dry place.

Arillus Longan
(龙眼肉, Longyanrou)

Longan Aril

Longan Aril is the aril of *Dimocarpus longan* Lour. (Fam. Sapindaceae). The drug is collected in summer and autumn when fruit is ripe, dried, removed from shell and nutlet, dried in the sun until it becomes unsticky.

Description Longitudinally broken and irregular slices, frequently several slices agglutinated, about 1.5 cm long, 2-4 cm wide, about 1 mm thick. Brown, translucent. One surface shrunken, the other surface lustrous, with longitudinally fine wrinkles. Texture soft. Odour, slightly aromatic; taste, sweet.

Identification Transverse section: Outer epidermal cells 1 row, subsquare. Inner epidermal cells 1 row, walls slightly

thickened, and covered with a relatively thickened cuticle. Parenchymatous cells between outer and inner epidermis large, cylindrical, in numerous rows, 148 μm in diameter. Some of the parenchymatous cells containing pale yellow masses and oil droplets.

Water Carry out the method as described under the determination of water (Appendix Ⅸ H, method I), not more than 15.0 per cent.

Total ash Not more than 4.0 per cent (Appendix Ⅸ K).

Extractives Carry out the hot extraction method as described under the determination of water-soluble extractives (Appendix Ⅹ A), not less than 70.0 per cent.

Action To tonify the heart and the spleen, nourish blood, and tranquilize the mind.

Indications Cardiac palpitation, forgetfulness and insomnia due to deficiency of qi and blood; anemia.

Usage and dosage 9-15 g.

Storage Preserve in a ventilated dry place, protected from moisture and moth.

Arisaema cum Bile (胆南星, Dannanxing)

Bile Arisaema

Bile Arisaema is prepared from finely powdered *Rhizoma Arisaematis* (processed) and the bile of ox, sheep or pig, or prepared by fermentation of finely powdered *Rhizoma Arisaematis* with the bile of ox, sheep or pig.

Description Cubic or cylindrical, brownish-yellow, greyish-brown or brownish-black. Texture hard. Odour, slightly fishy; taste, bitter.

Identification (1) Powder: Pale yellowish-brown. Parenchymatous cells subrounded, filled with gelatinized starch granules. Raphides of calcium oxalate 20-90 μm long. Spiral and annular vessels 8-60 μm in diameter.
(2) To 0.2 g of the powder add 5 ml of water, shake and filter. Transfer 2 ml of the filtrate to a test tube, add 0.5 ml of freshly prepared furfural (1→100), and add 2 ml of sulfuric acid along the tube wall; a brownish-red ring produces at the junction of the two layers.

Action To remove *heat* and resolve *phlegm*, and calm the nerves.

Indications Cough with yellowish sticky expectoration; stroke, mania, epilepsy.

Usage and dosage 3-6 g.

Storage Preserve in a ventilated dry place, protected from moth.

Aspongopus (九香虫, Jiuxiangchong)

Stink-bug

Stink-bug is the dried body of *Aspongopus chinensis* Dallas (Fam. Pentatomidae). The drug is collected from November to the next March, placed in an appropriate container, suffocated with wine, then taken out and dried in the shade; or scalded to death by boiling water, taken out, and dried.

Description Somewhat hexagonal and flattened ellipsoidal, 1.6-2 cm long, about 1 cm wide. Externally brown or brownish-black, slightly lustrous. Small head and thorax slightly triangular; compound eyes protruded, ovoid, ocellus one pair; a pair of antennae each with 5 segments, usually fallen off. Dorsum bearing 2 pairs of wings, the outer pair relatively hard at the basal, the inner pair membranous and transparent. Thorax bearing 3 pairs of legs, usually fallen off. Abdomen brownish-red to brownish-black, each segment with projected small points near the margin. Texture fragile, pale brown contents in abdomen visible when broken. Odour, characteristic; taste, slightly salty.

Total ash Not more than 6.0 per cent (Appendix Ⅸ K).

Extractives Carry out the method for determination of ethanol-soluble extractives (Appendix Ⅹ A, the hot extraction method), using dilute ethanol as the solvent, not less than 10.0 per cent.

Processing *Aspongopus* Eliminate foreign matter.

Aspongopus (*stir-baked*) Stir-bake clean Aspongopus as described under the method for simple stir-baking (Appendix Ⅱ D) until an aromatic odour is produced.

Action To regulate the flow of *qi* and relieve pain, warm the stomach, and restore the *kidney-yang*.

Indications Epigastric pain with distension due to cold in the stomach or stagnation of *qi* in the liver and stomach; impotence and aching of the loins and knees in deficiency syndrome of the kidney.

Usage and dosage 3-9 g.

Storage Preserve in wood boxes lined with wax paper, protected from moisture and moth.

Benzoinum
(安息香, Anxixiang)

Benzoin

Benzoin is the dried resin collected from the trunk of *Styrax tonkinensis* (Pierre) Craib ex Hart. (Fam. Styracaceae), which is injured naturally or incised in summer and autumn, and dried in the shade.

Description Small irregular pieces, somewhat flat, often stuck into masses. Externally orange-yellow, with waxy lustre (naturally injured resin); or irregularly cylindrical, flat pieces, externally greyish-white to pale yellowish-white (artificially incised resin). Texture fragile, easily broken; fracture even, white, gradually becoming pale yellowish-brown or reddish-brown on storage, soften and melt on heating. Odour, aromatic; taste, slightly pungent, with a sensation of sand when chewing.

Identification (1) Heat 0.25 g in a dry test tube, an irritant, aromatic odour and numerous, prismatic sublimates are produced.
(2) To 0.1 g add 5 ml of ethanol, grind, and filter. To the filtrate add 0.5 ml of 5% ferric chloride in ethanol; a light green colour is produced which changes to yellowish-green.

Loss on drying When the coarse powder is dried over sulfuric acid in a vacuum desiccator to constant weight, loses not more than 2.0 per cent of its weight (Appendix Ⅸ G).

Total ash Not more than 0.50 per cent (Appendix Ⅸ K).

Ethanol-insoluble matter Extract 2.5 g, accurately weighed, of the fine powder in a Soxhlet's extractor with ethanol until the extraction is complete. Dry the residue to constant weight at 100℃, not more than 2.0 per cent.

Assay Weigh accurately 1.5 g of the powder, in a flask, add 25 ml of ethanolic potassium hydroxide solution (0.5 mol/L), and heat under reflux on a water bath for 1.5 hours. Evaporate the ethanol and disperse the residue in 50 ml of hot water. Allow it to cool, add 150 ml of water and 50 ml of magnesium sulfate solution (1→20), mix well, and allow to stand for 10 minutes. Filter, wash the residue with 20 ml of water. Acidify the combined filtrate and washings with hydrochloric acid, transfer to a separator, and extract successively with 50, 40, 30 and 30 ml of ether, then extract the combined ether extracts with 20, 20, 10, 10 and 10 ml of sodium carbonate solution (1→20) successively, washing each aqueous extract with the same 20 ml of ether. Acidify the combined aqueous extracts with hydrochloric acid, and extract again successively with 30, 20, 10 and 10 ml of ether. Combine and transfer the ether extracts to a weighed flask, evaporate most of ether with a current of air and rotate the flask to disperse the residue on the inner wall of the flask. Dry the flask to constant weight over sulfuric acid in a vacuum desiccator, weigh accurately. The weight of residue represents the content of total balsamic acid in the sample. Calculate the percentage on the dried basis, subtracted the content of ethanol-insoluble matter, the percentage represents the content of total balsamic acid.
It contains not less than 30.0 per cent of total balsamic acid, calculated on the basis of ethanol extractives.

Action To restore consciousness, activate the flow of *qi* and blood, and relieve pain.

Indications Loss of consciousness in stroke and attack of noxious factors, syncope due to violent excitement or postpartum anemia; pain in the chest and epigastrium; infantile convulsion.

Usage and dosage 0.6-1.5 g; usually as an ingredient in pills or powder.

Storage Preserve in a cool and dry place.

Bombyx Batryticatus
(僵蚕, Jiangcan)

Stiff Silkworm

Stiff Silkworm is the dried body of the 4-5th stage larva of *Bombyx mori* Linnaeus. (Fam. Bombycidae) died of infection (or artificial infection) of *Beauveria bassiana* (Bals.) Vuill ant. The drug is usually collected in spring or autumn, and dried.

Description Somewhat cylindric, usually curved and shrunken, 2-5 cm long, 0.5-0.7 cm in diameter. Externally greyish-yellow, covered with white powdery aerial mycelia and conidia. Head relatively round, 8 pairs of legs, segments prominent, caudal portion somewhat dichotomic. Texture hard and fragile, easily broken. Fracture even, peripheral layer white, middle part with 4 bright brown or bright black rings of silk glands. Odour, slightly stinking; taste, slightly salty.

Identification Powder: Greyish-brown. The mycelia almost colourless, slender rolled and twisted in the body walls. Broken pieces of the trachea walls slightly curved or arch-like, with brown or dark brown spiral filaments. The surface of the epidermis with reticulated shrunken striations and small pointed projections formed by the striations; with rounded setae pits, the margin of the pits yellow. Setae yellow or yellowish-brown, surface smooth, walls slightly thickened. The indigested mulberry leaf tissues mostly containing clusters or prisms of calcium oxalate.

Foreign matter Not more than 3.0 per cent (Appendix Ⅸ A).

Water Carry out the method for determination of water (Appendix Ⅸ H, method 1), not more than 13.0 per cent.

Total ash Not more than 7.0 per cent (Appendix Ⅸ K).

Acid-insoluble ash Not more than 2.0 per cent (Appendix Ⅸ K).

Extractives Carry out the method for determination of ethanol-soluble extractives (Appendix Ⅹ A, the hot extraction method), using dilute ethanol as the solvent, not less than 20.0 per cent.

Processing *Bombyx Batryticatus* Wash clean and dry, eliminate foreign matter.

Bombyx Batryticatus (*stir-baked*) Stir-bake clean Bombyx Batryticatus as described under the method for stir-baking with bran (Appendix Ⅱ D) until the surface become yellow.

Action To dispel *wind*, relieve convulsion, and dissolve lumps.

Indications Convulsion; sore throat, cutaneous itching; submaxillary lymphadenitis; facial paralysis.

Usage and dosage 5-9 g.

Storage Preserve in a dry place, protected from moth.

Borneolum (*d*-Borneolum) (天然冰片, Tianran Bingpian)

Natural Borneol

Natural Borneol is the crystal produced from the flash branches and leaves of *Cinnamomum camphora* (L.) Presl (Fam. Lauraceae) by steam distillation.

Description A white crystalline powder or flaky crystal. Odour, delicately aromatic; taste, pungent and cool. Volatile, a heavy fume produced on burning with a yellow flame.
Freely soluble in ethanol, chloroform or ether; practically insoluble in water.

Melting rang 204-209 ℃ (Appendix Ⅶ C).

Specific optical rotation +34°-+38°, in a solution of 0.1 g per ml in ethanol (Appendix Ⅶ E).

Identification To a quantity of the sample, add chloroform to produce a solution containing 2 mg per ml as the test solution. Dissolve *d*-borneol CRS in chloroform to produce a solution containing 2 mg per ml as the reference solution. Carry out the method for thin layer chromatography (Appendix Ⅵ B), using silica gel G as the coating substance and a mixture of n-hexane and ethyl acetate (17 : 3) as the mobile phase. Apply separately to the plate 2 μl of the test solution and the reference solution. After developing and removal of the plate, dry in air. Spray with a 1% vanillin solution in sulfuric acid in ethanol, and heat at 105℃ to the spots clear. The spots in the chromatogram obtained with the test solution correspond in position and colour to the spots in the chromatogram obtained with the reference solution.

Isoborneol Dissolve a quantity of isoborneol CRS in chloroform to produced a solution of 2 mg per ml as the reference solution. Carry out the method for thin layer chromatography (Appendix Ⅵ B), operating according to the "Identification", apply separately to the plate 2 μl of the test solution produced in the "Identification" and the reference solution. No spots observed in the chromatogram obtained with the test solution correspond in position to the spots in the chromatogram obtained with the reference solution.

Assay Carry out the method for gas chromatography (Appendix Ⅵ E).

Chromatographic system and system suitability Use 10% polyethylene glycol (PEG)-20M as the stationary phase, and maintain the column temperature at 140℃. The number of the theoretical plate of the column is not less than 1900, calculated with reference to the peak of *d*-borneol and the resolution factor between the peak of borneol and isoborneol complies with the related requirements.

Correction factor Dissolve a quantity of methyl salicylate, accurately weighed, in ethyl acetate to produce a solution containing 1 mg per ml, as an internal standard solution. Dissolve 12.5 mg of *d*-borneol CRS, accurately weighed, in a 25 ml volumetric flask and dilute with the internal standard solution to volume, and mix well. Inject accurately 2 μl of the solution into column, calculate the correction factor for borneol.

Procedure Dissolve about 12.5 mg, accurately weighed, in a 25 ml volumetric flask and dilute with the internal standard solution to volume, and mix well as the test solution. Inject accurately 2 μl of the test solution into the column and calculate the contents.
It contains not less than 95.0 per cent of *d*-borneol ($C_{10}H_{18}O$).

Action To induce resuscitation, clear *heat* and alleviate pain.

Indications Impaired consciousness in febrile diseases, spasm, apoplexy, phlegm syncope, convulsive epilepsy, phlegmatic coma, laryngalgia, toothache, sore mouth, carbuncles, bloodshot eyes.

Usage and dosage 0.3-0.9g, used in pills or in powder form. Appropriate quantity for external application.

Storage Preserve in a tightly closed containers, stored in a cool place.

Borneolum Syntheticum (冰片, Bingpian)

Borneol

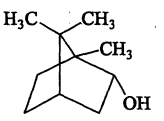

$C_{10}H_{18}O$ 154.25

Description Colourless, transparent, or white, translucent, loose and fragile, plate crystals; volatile, a heavy fume is produced on burning with a bright flame. Odour, delicately aromatic; taste, pungent and cool. Freely soluble in ehtanol, chloroform or ether; practically insoluble in water.

Melting point 205-210℃ (Appendix Ⅶ C).

Identification (1) Dissolve about 10 mg in several drops of ethanol, add 1-2 drops of freshly prepared 1% solution of vanillin in sulfuric acid; a purple colour is produced immediately.
(2) To 3 g add 10 ml of nitric acid; a reddish-brown gas is produced immediately. Add 20 ml of water after the subsidence of the gas, mix well and filter, wash the residue with water; a smell resembling camphor is perceptible.

pH value Grind 2.5 g to fine powder, shake well with 25 ml of water and filter. Divide the filtrate into two portions of 10 ml each. Add 2 drops of methyl red IS to one portion and 2 drops of phenolphthalein IS to the other, the solutions are not red in colour.

Non-volatile matter Evaporate 10 g on a water bath in a weighed evaporating dish and dry at 105℃ to constant weight, not more than 3.5 mg (0.035 per cent).

Water Dissolve 1 g in 10 ml of petroleum ether with shaking, the solution is clear.

Heavy metals Dissolve 2 g in 23 ml of ethanol, add 2 ml of dilute acetic acid, carry out the limit test for heavy metals (Appendix Ⅸ E, method 1), not more than 0.0005 per cent.

Arsenic Mix well 1 g with 0.5 g of calcium hydroxide and 2 ml of water, heat on a water bath, allow it to volatilize, cool. Neutralize with hydrochloric acid, then add 5 ml of hydrochloric acid and a quantity of water to make up the volume to 28 ml. Carry out the limit test for arsenic (Appendix Ⅸ F), not more than 0.0002 per cent.

Assay Carry out the method for gas chromatography (Appendix Ⅵ E).

Chromatographic system and system suitability Use a column packed with 10 per cent polyethylene glycol (PEG)-20M as the stationary phase, and maintain the column temperature at 140℃. The number of the theoretical plate of the column is not less than 1900, calculated with reference to the peak of borneol and the resolution factor between the peak of borneol and isoborneol complies with the related requirements.

Correction factor Dissolve a quantity methyl salicylate, accurately weighed, in ethyl acetate to produce a solution containing 5 mg per ml, mix well as internal standard solution. Dissolve about 50 mg of (±)-borneol CRS, accurately weighed, in a 10 ml volumetric flask and dilute with the internal standard solution to volume, mix well. Inject accurately 1 μl of the solution into column, calculate the correction factor for borneol.

Procedure Dissolve about 50 mg, accurately weighed, in a 10 ml volumetric flask and dilute with the internal standard solution to volume, mix well. Inject accurately 1 μl of the test solution into the column and calculate the contents.
It contains not less than 55.0 per cent, calculated as borneol ($C_{10}H_{18}O$).

Action To restore consciousness, remove *heat*, and relieve pain.

Indications Loss of consciousness and convulsion in febrile diseases, stroke and attack of noxious factors; syncope due to violent excitment; inflammation of the eyes, ulcers in the mouth, sore throat, purulent discharge from the auditory canal.

Usage and dosage 0.15-0.3 g, used in pills or powder; for external use, appropriate quantity is ground into powder and applied topically.

Precaution Used with caution in pregnancy.

Storage Preserve in tightly closed containers, stored in a cool place.

Bulbus Allii Macrostemonis (薤白, Xiebai)

Longstamen Onion Bulb

Longstamen Onion Bulb is the dried bulb of *Allium macrostemon* Bge. or *Allium chinensis* G. Don (Fam. Liliaceae). The drug is collected in summer and autumn, washed clean, removed from fibrous root, steamed thoroughly or scalded thoroughly in boiling water, and dried in the sun.

Description *Bulb of Allium macrostemon* Irregularly ovoid, 0.5-1.5 cm high, 0.5-1.8 cm in diameter. Externally yellowish-white or pale yellowish-brown, crumpled, translucent, bearing whitish membranous scales, with bulged plateau at base. Texture hard, horny. Odour, alliaceous; taste, slightly pungent.

Bulb of Allium chinensis Slightly compressed long-ovate, 1-3 cm high, 0.3-1.2 cm in diameter. Externally pale yellowish-brown or brown, marked with shallowly longitudinal wrinkles. Texture rather soft, cut surface showing 2-3 layers of scale leaves, sticky to teeth on chewing.

Identification To 4 g of the powder add 20 ml of *n*-hexane, ultrasonicate for 20 minutes, filter and evaporate the filtrate to dryness. Dissolve the residue in 1 ml of *n*-hexane as the test solution. Produce a reference drug solution of 4 g of Bulbus Allii Macrostemonis reference drug in the same manner. Carry out the method for thin layer chromatography (Appendix Ⅵ B), using silica gel H as the coating substance and a mixture of *n*-hexane and ethyl acetate (10 : 1) as the mobile phase. Apply separately 10 μl of each of the above two solutions to the plate. After developing and removal of the plate, dry in air, expose to iodine vapour to visualize clearly. The spots in the chromatogram obtained with the test solution correspond in position and colour to the spots in the chromatogram obtained with the reference drug solution.

Action To remove the retained *phlegm* from the chest, promote the flow of *qi* and relieve its stagnation.

Indications Angina pectoris; cough and dyspnea caused by retained phlegm; tenesmus in dysentery.

Usage and dosage 5-9 g.

Storage Preserve in a dry place, protected from moth.

Bulbus Fritillariae Cirrhosae (川贝母, Chuanbeimu)

Tendrilleaf Fritillary Bulb

Tendrilleaf Fritillary Bulb is the dried bulb of *Fritillaria cirrhosa* D. Don, *Fritillaria unibracteata* Hsiao et K. C. Hsia, *Fritillaria przewalskii* Maxim. or *Fritillaria delavayi* Franch. (Fam. Liliaceae). According to the different characters, the drug derived from the former three are known as "Songbei" and "Qingbei" respectively, and the drug derived from the latter is known as "Lubei".
The drug is collected in summer or autumn, or when the snow melts, removed from fibrous root, coarse bark and soil, and dried in the sun or at a lower temperature.

Description *Songbei* Subconical or subspherical, 0.3-0.8 cm high, 0.3-0.9 cm in diameter. Externally whitish. The outer scale leaves 2, varying considerably in size, with the large scale closely embracing the small one, the uncovered part appearing crescent, commonly known as "Huaizhong Baoyue" (holding the moon in the arms). Apex closed, with subcylindrical and slightly tapering buds and 1-2 small scales inside; apex obtuse or slightly acute, base even and slightly concave, with a greyish-brown disk at central part, remains of fibrous roots occasionally found. Texture hard and fragile, fracture white, starchy. Odour, slight; taste, slightly bitter.

Qingbei Nearly oblate, 0.4-1.4 cm high, 0.4-1.6 cm in diameter. Outer scale leaves 2, almost uniform in size, embraced. Apex open, with buds and 2-3 small scales inside and slender cylindrical remains of a stem.

Lubei Long conical, 0.7-2.5 cm high, 0.5-2.5 cm in diameter. Externally whitish or pale brownish-yellow, some brown-maculate. Outer scales leaves 2, almost uniform in size. Apex open and somewhat tapering, base slightly acute or relatively obtuse.

Identification Powder: Whitish.

Songbei and Qingbei Starch granules fairly abundant, broadly ovoid, long spheroidal or irregularly spheroidal, some with uneven or slightly branch-like edges, 5-64 μm in diameter, hilum short slit-shaped, pointed, V-shaped or U-shaped, and faint striations visible. Epidermal cells subrectangular, anticlinal walls sinuous, rounded or oblate anomocytic stomata occasionally found. Spiral vessels 5-26

μm in diameter.

Lubei Starch granules broadly ovoid, conchoidal, reniform or ellipsoidal, up to 60 μm in diameter, hilum V-shaped, stellate or pointed, striations distinct. Spiral and reticulate vessels even up to 64 μm in diameter.

Water Carry out the method for the determination of water (Appendix Ⅸ H, Method 1), not more than 15.0 per cent.

Total ash Not more than 5.0 per cent (Appendix Ⅸ K).

Acid-insoluble ash Not more than 0.5 per cent (Appendix Ⅸ K).

Extractives Carry out the method for determination of ethanol-soluble extractives (Appendix Ⅹ A, the hot extraction method), using dilute ethanol as solvent, not less than 9.0 per cent.

Action To remove *heat*, moisten the lung, resolve *phlegm* and relieve cough.

Indications Dry cough due to *heat* in the lung; cough with bloody sputum in consumptive diseases.

Usage and dosage 3-9 g; ground into powder and taken with water, 1-2 g each time.

Precaution Incompatible with Radix Aconiti and allied drugs.

Storage Preserve in a ventilated dry place, protected from moth.

Bulbus Fritillariae Hupehensis (湖北贝母, Hubeibeimu)

Hubei Fritillary Bulb

Hubei Fritillary Bulb is the dried bulb of *Fritillaria hupehensis* Hsiao et K. C. Hsia (Fam. Liliaceae). The drug is collected in early summer when the plant is withered, soaked in limewater or water and then dried.

Description Oblate, 0.8-2.2 cm in height, 0.8-3.5 cm in diameter. Externally whitish to brownish, the outer scale leaves 2, fleshy, nearly reniform, or varying considerably in size, the large scale closely embracing the small one, apex closed or open, with 2-6 scales and shrunken stem remains. Internally yellowish to whitish. Base depressed, with remains of brownish epidermis and a few fibrous roots. The single scale leaf reniform-shoe-shaped, 2.5-3.2 cm in length, 1.8-2 cm in diameter. Texture fragile, fracture whitish, starchy. Odour, slight; taste, bitter.

Identification (1) Powder: Pale brownish-yellow. Starch granules fairly abundant, broadly ovoid, long ellipsoid or subspheroid, 7-54 μm in diameter, hilum pointed, V-shaped, slit-shaped or separated to be like horsetail, striations fine and dense, distinct; compound granules of 2-3 components, smaller, visible occasionally. Epidermis cells subsquare or polygonal, anticlinal walls irregularly beaded; sometimes stomata visible, oblate, 54-62 μm in diameter, with 4-5 subsidiary cells. Crystals of calcium oxalate rhombic, subsquare, granular or clustered, up to 50 μm in diameter. Spiral vessels or annular vessels, 60-20 μm in diameter.
(2) To 10 g, in powder, add 50 ml of ethanol, heat under reflux for 1 hour, filter, evaporate the filtrate to dryness. Macerate the residue in 10 ml of dilute hydrochloric acid, stir to dissolve, filter, adjust the filtrate to pH 10 or above with 40% sodium hydroxide solution. Extract by shaking with two 10-ml quantities of chloroform, combine the chloroform extracts and evaporate to dryness. Dissolve the residue in 1 ml of absolute ethanol as the test solution. Prepare a solution of Bulbus Fritillariae Hupehensis reference drug in the same manner as the reference drug solution. Carry out the method for thin layer chromatography (Appendix Ⅵ B), using silica gel G mixed with sodium carboxy-methylcellulose as the coating substance and a mixture of benzene, ethyl acetate and diethylamine (30 : 20 : 3.8) as the mobile phase. Apply separately 10 μl of each of the two solutions to the plate. After developing and removal of the plate, dry in air. Spray with dilute potassium iodobismuthate TS. The spots in the chromatogram obtained with the test solution correspond in position and colour to the spots in the chromatogram obtained with the reference drug solution.

Assay Weigh accurately 2 g, in fine powder, to a stopper conical flask, moisten with 2 ml of strong ammonia TS, add accurately 50 ml of ether, tightly stoppered and shake, allow to stand for 24 hours. Measure accurately 25 ml of the supernatant into an evaporating dish, evaporate to dryness. Dissolve the residue with a quantity of absolute ethanol, transfer to a 5 ml volumetric flask and dilute to volume, mix well, used as the test solution. Dissolve a quantity of hupehenine CRS in absolute ethanol to produce a solution containing 1 mg per ml as the reference solution. Carry out the method for thin layer chromatography (Appendix Ⅵ B), using silica gel G as the coating substance and a mixture of benzene, ether, ethyl acetate and diethylamine (3 : 3 : 4 : 1) as the mobile phase. Apply separately 10-20 μl of the test solution and 1 μl, 5 μl of the reference solution alternatively to the plate. After developing and removal of the plate, dry in air. Spray with dilute potassium iodobismuthate TS. Cover the plate with a piece of glass of the same size and fix up the edge with tape. Carry out the method for thin layer chromatography (thin layer chromatographic scanning method, Appendix Ⅵ B), scan immediately at wavelength of $\lambda_S = 500$ nm, $\lambda_R = 600$ nm. Measure the integration values of the absorbance from the test solution and the reference solution respectively, calculate the content.
It contains not less than 0.020 per cent of hupehenine ($C_{27}H_{45}NO_2$).

Processing Wash clean and dry.

Action To remove *heat* and resolve *phlegm*, relieve cough and dispel the obstruction.

Indications Cough due to *heat-phlegm*, subcutaneous nodule scrofula, swelling carbuncles and sore *toxicity*.

Usage and dosage 3-9 g; ground into powder and taken with water.

Precaution Incompatible with Radix Aconiti and allied drugs.

Storage Preserve in a dry place, protected from moth.

Bulbus Fritillariae Pallidiflorae (伊贝母, Yibeimu)

Sinkiang Fritillary Bulb

Sinkiang Fritillary Bulb is the dried bulb of *Fritillaria walujewii* Regel or *Fritillaria pallidiflora* Schrenk (Fam. Liliaceae). The drug is collected from May to July, removed from soil, dried in the sun, and then removed from fibrous root and the outerbark.

Description *Bulbs of Fritillaria walujewii* Oblate, 0.5-1.5 cm high. Externally whitish and smooth. The outer

scale leaves 2, crescent, plump and fleshy, almost uniform in size and closed together. Apex spread and open out, base rounded and obtuse, with relatively larger scale leaf, remain of a stem and a bud inside. Texture hard and fragile, fracture white, starchy. Odour, slight; taste, slightly bitter.

Bulbs of Fritillaria pallidiflora Conical, relatively large. Externally somewhat rough, pale yellowish-white. The outer scale leaves 2, cordate, plump and large, significantly varying or almost uniform in size, closely embraced each other. Apex slightly acute with a few open, base slightly concave.

Identification (1) Powder: Whitish, mainly consisting of starch granules.

Bulbs of Fritillaria walujewii Starch granules simple, broadly ovoid, ovoid or conchoidal, 5-54 μm in diameter, hilum pointed, V-shaped or shortly slit-shaped, striations distinct; compound granules less, of 2 components. Epidermal cells subrectangular, with sinuous anticlinal walls, containing small prisms of calcium oxalate. Stomata anomocytic, with 4-6 subsidiary cells, spiral and annular vessels 9-56 μm in diameter.

Bulbs of Fritillaria pallidiflora Starch granules simple, broadly ovoid, triangular-ovoid, conchoidal or irregularly rounded, up to 60 μm in diameter, hilum pointed, V-shaped or crossed. Vessels about 50 μm in diameter.

(2) To 5 g of the powder add 2 ml of strong ammonia TS and 20 ml of chloroform, shake, allow to stand overnight, filter, and evaporate the filtrate to dryness. Dissolve the residue in 0.5 ml of chloroform as the test solution. Prepare a solution of 5 g of Balbus Fritillariae Pallidiflorae reference drug in the same manner as the reference drug solution. Dissolve sipeimine CRS in chloroform to produce a solution containing 0.5 mg per ml as the reference solution. Carry out the method for thin layer chromatography (Appendix Ⅵ B), using silica gel G mixed with 2% sodium hydroxide solution as the coating substance and the lower layer of chloroform, ethyl acetate, methanol and water (8 : 8 : 3 : 2), standing below 10℃, as the mobile phase. Apply separately 2-4 μl of each of the three solutions to the plate. After developing and removal of the plate, dry in air, and spray with dilute optassium iodobismuthate TS and sodium nitrite TS successively. The spots in the chromatogram obtained with the test solution correspond in position and colour to the spots in the chromatogram obtained with the reference drug solution. A brown spot in the chromatogram obtained with the test solution corresponds in position and colour to the spot in the chromatogram obtained with the reference solution.

Total ash Not more than 4.5 per cent (Appendix Ⅸ K).

Acid-insoluble ash Not more than 0.9 per cent (Appendix Ⅸ K).

Extractives Carry out the cold maceration extraction method as described under the determination of ethanol-soluble extractives (Appendix Ⅹ A), using 70% ethanol as the solvent, not less than 9.0 per cent.

Action To remove *heat* from the lung, resolve *phlegm*, and reduce nodules.

Indications *Heat* in the lung manifested by cough, stuffiness feeling in the chest and sticky sputum; scrofula and other inflammatory nodules.

Usage and dosage 3-9 g.

Precaution Incompatible with Radix Aconiti and allied drugs.

Storage Preserve in a ventilated dry place, protected from moth.

Bulbus Fritillariae Thunbergii (浙贝母, Zhebeimu)

Thunberg Fritillary Bulb

Thunberg Fritillary Bulb is the dried bulb of *Fritillaria thunbergii* Miq. (Fam. Liliaceae). The drug is collected in early summer when the plant is withered, washed clean, and classified according to its size. The larger one is removed from the central bud and commonly known as "Dabei", the smaller one, with the central bud not removed, is commonly known as "Zhubei". The drug is removed from the outer bark by dashing and mixed with calcinated shell powder to absorb the juice dashed out and dried. Or the drug is classified according to its size, washed clean, removed from the central bud, cut into thick slice while fresh, washed clean, and dried, commonly known as "Zhebeipian".

Description *Dabei* Outer single scale leaf of bulb, slightly in crescent shape, 1-2 cm high, 2-3.5 cm in dia-meter. The outer surface whitish to pale yellow, the inner surface white or pale brown, covered with white powder. Texture hard and fragile, easily broken, fracture white to yellowish-white, highly starchy. Odour, slight; taste, slightly bitter.

Zhubei Whole bulb, oblate, 1-1.5 cm high, 1-2.5 cm in diameter. Externally whitish, the outer scale leaves 2, plump and fleshy, slightly in reniform, holding to each other, containing 2-3 small scale leaves and dried shrunken stem remains.

Zhebeipian Slices cut from the outer single scale leaf of bulb, elliptical or subrounded, 1-2 cm in diameter, surface of edge pale yellow, cut surface even, powdery-white. Texture, hard and fragile, easily broken, fracture powdery-white, highly starchy.

Identification (1) Powder: Pale yellowish-white. Starch granules numerous, simple granules ovoid, broad-ovoid or elliptical, 6-56 μm in diameter, striations indistinct. Epidermis cells subpolygonal or rectangular, anticlinal walls beaded-thickened; stomata less visible, with 4-5 subsidiary cells. Crystals of calcium oxalate less visible, minute, mostly granular, some in fusiform, square or thin bacilliform. Vessels mostly spiral, up to 18 μm in diameter.

(2) To 5 g of the powder add 2 ml of strong ammonia solution and 20 ml of chloroform. Allow to stand overnight, filter and evaporate 8 ml of the filtrate to dryness. Dissolve the residue in 1 ml of chloroform as the test solution. Dissolve peimine CRS and peinine CRS in chloroform to produce a mixture containing 2 mg of each per ml as the reference solution. Carry out the method for thin layer chromatography (Appendix Ⅵ B), using silica gel G mixed with sodium carboxymethylcellulose as the coating substance and a mixture of ethyl acetate, methanol and strong ammonia TS (17 : 2 : 1) as the mobile phase. Apply separately 10-20 μl of the test solution and 10 μl of the reference solution to the plate. After developing and removal of the plate, dry in air, spray with dilute potassium iodobismuthate TS. The spots in the chromatogram obtained with the test solution correspond in position and colour with the spots in the chromatogram obtained with the reference solution.

Water Carry out the method for determination of water

(Appendix Ⅸ H, method 1), not more than 18.0 per cent.

Total ash Not more than 6.0 per cent (Appendix Ⅸ K).

Acid-insoluble ash Not more than 1.0 per cent (Appendix Ⅸ K).

Extractives Carry out the method for determination of ethanol-soluble extractives (Appendix Ⅹ A, the hot extraction method), using dilute ethanol as the solvent, not less than 8.0 per cent.

Assay Carry out the method for high performance liquid chromatography (Appendix Ⅵ D).

Chromatographic system and system suitability Use octadecylsilane bonded silica gel as the stationary phase and a mixture of acetonitrile, water and diethylamine (70 : 30 : 0.03) as the mobile phase. Use an evaporative light scattering detector. The number of theoretical plates of the column is not less than 2000, calculated with the reference to the peak of peimine.

Reference solution Weigh accurately a quantity of peimine CRS and peinine CRS, respectively, dissolve in methanol to produce a mixture containing 0.2 mg and 0.15 mg of each per ml.

Test solution Weigh accurately 2 g of the powder (through No. 4 sieve) to a flask, add 4 ml of strong ammonia TS and macerate for 1 hour. Accurately add 40 ml of a mixture of chloroform and methanol (4 : 1), weigh, heat under reflux on a water bath at 80℃ for 2 hours, cool and weigh again, replenish the loss of solvent with the above mixture and filter. Measure accurately 10 ml of the successive filtrate and evaporate to dryness in an evaporating dish. Dissolve the residue with methanol, transfer to a 2 ml volumetric flask, dilute with methanol to volume and mix well.

Procedure Accurately inject 10 μl, 20 μl of the reference solution and 5-15 μl of the test solution, respectively, into the column, and calculate the content, using a calibration equation of logarithm alteration of two external standards.
It contains not less than 0.080 per cent of the total amount of peimine ($C_{27}H_{45}NO_3$) and peinine ($C_{27}H_{43}NO_3$), calculated with reference to the dried drug.

Processing Eliminate foreign matter, wash clean, soften thoroughly, cut into thick slices, and dry; or pound to pieces.

Action To remove *heat* and reduce nodulation, resolve *phlegm* and relieve cough.

Indications Attack of *wind-heat* on the lung; cough due to *phlegm-heat*; lung abscess; mastitis; sores, scrofula.

Usage and dosage 4.5-9 g.

Precaution Incompatible with Radix Aconiti and allied drugs.

Storage Preserve in a dry place, protected from moth.

Bulbus Fritillariae Ussuriensis (平贝母, Pingbeimu)

Ussuri Fritillary Bulb

Ussuri Fritillary Bulb is the dried bulb of *Fritillaria ussuriensis* Maxim. (Fam. Liliaceae). The drug is collected in spring, removed from outer bark, fibrous root and soil, dried in the sun or at a lower temperature.

Description Oblate, 0.5-1 cm high, 0.6-2 cm in diameter. Externally milk white or pale yellowish-white, outer scale leaves 2, plump, uniform in size or the large scale leaf embracing the small one, apex slightly flat or dented, frequently slightly split, scales in the centre small. Texture hard and fragile, fracture starchy. Odour, slightly; taste, bitter.

Identification (1) Powder: Starch granules simple, rounded-triangular, ovoid, rounded-conchoidal, triangular-ovoid, long-cocooned, 6-58 (-74) μm in diameter, up to 67 μm long, hilum cleft-like, pointed or V-shaped in the smaller end, striations dense and distinct. Semi-compound few, hila 2, simple granules with multihila visible occasinally, hila 2-4. Stomata subrounded or depressed rounded, 40-48 (50) μm in diameter, with 4-6 subsidiary cells.
(2) To 10 g of the powder add 10 ml of strong ammonia TS and 30 ml of chloroform, ultrasonicate for 30 minutes, filter and evaporate the filtrate to dryness. Dissolve the residue in 0.5 ml of methanol as the test solution. Dissolve pingbeimine A CRS in methanol to produce a reference solution containing 1 mg per ml. Carry out the method for thin layer chromatography (Appendix Ⅵ B), using silica gel G as the coating substance and a mixture of ethyl acetate, methanol and strong ammonia TS (6 : 1 : 0.5) as the mobile phase. Apply separately 12 μl of the test solution and 5 μl of the reference solution to the plate. After developing and removal of the plate, dry in air, spray with dilute potassium iodobismuthate TS and 5% sodium nitrite TS successively. The spot in the chromatogram obtained with the test solution corresponds in position and colour to the spot in the chromatogram obtained with the reference solution.

Processing Eliminate foreign matter. Break to pieces before use.

Action To remove *heat* from the lung, relieve cough and resolve *phlegm*.

Indications Heat in the lung with cough, sticky and bloody sputum, and distress in the chest.

Usage and dosage 3-9 g; or 1-2 g each time, ground into powder and taken with water.

Precaution Incompatible with Radix Aconiti and allied drugs.

Storage Preserve in a ventilated dry place, protected from moth.

Bulbus Lilii (百合, Baihe)

Lily Bulb

Lily bulb is the dried fleshy scale leaf of *Lilium lancifolium* Thunb., *Lilium brownii* F. E. Brown var. *viridulum* Baker or *Lilium pumilum* DC. The drug is collected in autumn, and washed clean. The scale leaves are stripped off, treated with boiling water for a moment, and dried.

Description Elongated elliptical, 2-5 cm long, 1-2 cm wide, 3-4 mm thick at middle. Externally whitish, pale brownish-yellow or purplish, with several longitudinal and paralled white vascular bundles. Apex somewhat acute, base relatively broad, margins thin, undulate, slightly curved inwards. Texture hard and fragile, fracture relatively even, horny. Odour, slight; taste, slightly bitter.

Identification To 1 g of the powder add 10 ml of methanol, ultrasonicate for 20 minutes and filter. Concentrate the filtrate to 1 ml as the test solution. Prepare a solution of Bulbus Lilii reference drug in the same manner as the reference drug solution. Carry out the method for thin layer chromatography (Appendix Ⅵ B), using silica gel G as the coating substance and the upper layer of the mixture of petroleum ether (60-90℃), ethyl acetate and formic acid (15 : 5 : 1) as the mobile phase. Apply separately to the plate 10 μl of each of the above two solutions. After developing and removal of the plate, dry in air, spray with a 10% solution of phosphomolybdic acid in ethanol and heat to the spots clear. The spots in the chromatogram obtained with the test solution correspond in position and colour to the spots obtained with the reference drug solution.

Extractives Carry out the cold extraction method as described under the determination for water soluble extractive (Appendix Ⅹ A), not less than 18.0 per cent.

Processing *Bulbus Lilii* Eliminate foreign matter.

Bulbus Lilii (*honeyed*) Stir-bake the clean Bulbus Lilii as described under the method for stir-baking with honey (Appendix Ⅱ D) to no longer sticky, using 5 kg of refined honey per 100 kg of *Bulbus Lilii*.

Action To nourish *yin* and moisten the lung, and tranquilize the mind.

Indications Deficiency of *yin* with chronic cough and bloody sputum; fidgets, palpitation, insomnia, dream-disturbed sleep and absent-mindedness.

Usage and dosage 6-12 g.

Storage Preserve in a ventilated dry place.

Bungarus Parvus
(金钱白花蛇, Jinqian Baihuashe)

Coin-like White-banded Snake

Coin-like White-banded Snake is the dried body of *Bungarus multicinctus* Blyth (Fam. Elapidae). The drug is collected in summer or autumn, opened in the abdomen, removed from the viscera, cleaned, immersed in ethanol, coiled up in disc-shape, fixed with a bamboo slip, and dried.

Description Disc-shaped, 3-6 cm in diameter of disc, 0.2-0.4 cm in diameter of snake. Head located in the centre of disc; tail slender, usually inserted into mouth; 1 pair of poisonous grooved fangs on the anterior end of maxilla in mouth, 2 internasals, loreal absent, upper and lower labials usually 7 respectively. Dorsum black or greyish-black, with 45-58 white annulations, alternating with black ones. The white rings 1-2 scales wide on the back, gradually widened towards the venter, and the black rings 3-5 scales wide. A median vertebral ridge raising distinctly. Scales on the vertebral ridge enlarged into hexagonal; dorsal scales small and dense, 15 rows throughout the body, subcaudals single row. Odour, slightly stinking; taste, slightly salty.

Extractives Carry out the method for determination of ethanol-soluble extractives (Appendix Ⅹ A, the hot extraction method), using dilute ethanol as the solvent, not less than 15.0 per cent.

Processing Eliminate dust and other attached impurities, and cut into sections.

Action To dispel *wind*, to remove obstruction from the collaterals, and relieve spasm.

Indications Chronic rheumatoid arthritis with numbness and muscular contracture; apoplectic hemiplegia and facial paralysis; convulsion, tetanus; scabies; ringworm; festered scrofula.

Usage and dosage 3-4.5g; 1-1.5g, ground into powder and taken with water.

Storage Preserve in a dry place, protected from mould and moth.

Cacumen Platycladi (侧柏叶, Cebaiye)

Chinese Arborvitae Twig and Leaf

Chinese Arborvitae Twig and Leaf is the dried twig and leaf of *Platycladus orientalis* (L.) Franco (Fam. Cupressaceae). The drug is collected in summer and autumn, and dried in the shade.

Description Frequently branched, twigs flattened. Leaves small, scale-shaped, decussate, close to stems, dark green or yellowish-green. Texture fragile, easily broken. Odour, delicately aromatic; taste, bitter, astringent and slightly pungent.

Identification (1) Powder: Yellowish-green. Upper epidermal cells of leaf rectangular, with slightly thickened walls. Lower epidermal cells subsquare, stomata numerous, sunken, subsidiary cells relatively large, dumbbell-shaped in side view. Parenchymatous cells containing oil droplets. Fibres slender, about 18 μm in diameter. Bordered pitted tracheids sometimes present.

(2) To 3 g of the powder add 50 ml of 70% ethanol and 3 ml of hydrochloric acid solution, heat under reflux for 3 hours, filter, use the filtrate as the test solution. Dissolve quercetin CRS in ethanol to prepare a solution containing 0.5 mg per ml as the reference solution. Carry out the method for thin layer chromatography (Appendix Ⅵ B), using silica gel H mixed with sodium carboxymethylcellulose as the coating substance and a mixture of benzene, ethyl acetate and formic acid (5 : 2 : 1) as the mobile phase. Apply separately to the plate 5 μl of the test solution and 1 μl of the reference solution. After developing and removal of the plate, dry in air, spray with 1% aluminum chloride in ethanol and examine under ultraviolet light at 365 nm. The fluorescent spot in the chromatogram obtained with the test solution corresponds in position and colour to the spot in the chromatogram obtained with the reference solution.

Foreign matter Not more than 6 per cent (Appendix Ⅸ A).

Water Not more than 11.0 per cent (Appendix Ⅸ H, method 2).

Total ash Not more than 10.0 per cent (Appendix Ⅸ K).

Acid-insoluble ash Not more than 3.0 per cent (Appendix Ⅸ K).

Extractives Carry out the method for determination of ethanol-soluble extractives (Appendix Ⅹ A, the hot extraction method), using ethanol as the solvent, not less than 15.0 per cent.

Assay Carry out the method for high performance liquid chromatography (Appendix Ⅵ D).

Chromatographic system and system suitability Use octadecylsilane bonded silica gel as the stationary phase and a mixture of methanol, 0.01 mol/L potassium dihydrogenphosphate and glacial acetic acid (40 : 60 : 1.5) as the mobile phase. As detector a spectrophotometer set at 254 nm. The number of the theoretical plates of the column is not less than 1500, calculated with reference to the peak of quercitroside.

Reference solution Weigh accurately a quantity of quercitroside CRS, add methanol to produce a solution containing 50 μg per ml.

Test solution Take 0.5 g of the powder, accurately weighed, to a stopper conical flask, accurately add 20 ml of methanol, and weigh. Ultrasonicate for 30 minutes, cool, weigh again and compensate the loss of the weight with methanol, shake well and filter. Use the successive filtrate as the test solution.

Procedure Inject accurately 10 μl of each of the reference solution and the test solution into the column, respectively, and calculate the content.

It contains not less than 0.10 per cent of quercitroside ($C_{21}H_{20}O_{11}$), calculated with reference to the dried drug.

Processing *Cacumen Platycladi* Eliminate hard twigs and foreign matter.

Cacumen Platycladi (*carbonized*) Carbonize the clean Cacumen Platycladi as described under the method for carbonizing by stir-baking (Appendix Ⅱ D), until the surface becomes charred brown and the inner part charred yellow.

Action To arrest bleeding by removing *heat* from blood, and promote the growth of black hair.

Indications Epistaxis, hematemesis, hemptysis, hematochezia, abnormal uterine bleeding; loss of hair due to *heat* in the blood; premature greying of hair and beard.

Usage and dosage 6-12 g; appropriate quantity for external use.

Storage Preserve in a dry place.

Cacumen Tamaricis (西河柳, Xiheliu)

Chinese Tamarisk Twig

Chinese Tamarisk Twig is the dried young twig and leaf of *Tamarix chinensis* Lour. (Fam. Tamaricaceae). The drug is collected in summer before flowering, and dried in the shade.

Description Twigs thin cylindrical, 0.5-1.5 mm in diameter. Externally greyish-green, with numerous alternate scale-shaped leaflets. Texture fragile, easily broken. Thick twigs reddish-brown externally, leaflets often fallen off, with prominent remains of petioles. Fracture yellowish-white, with a pith in the centre. Odour, slight; taste, weak.

Processing Eliminate old twigs and foreign matter, wash clean, soften slightly, cut into sections, and dry in the sun.

Action To induce diaphoresis and dispel *wind* and promote eruption.

Indications Measles without adequate eruption; rheumatic arthralgia.

Usage and dosage 3-6 g, for external use, appropriate quantity is decocted for topical application or washing.

Storage Preserve in a dry place.

Calculus Bovis (牛黄, Niuhuang)

Cow-bezoar

Cow-bezoar is the dried gallstone of *Bos taurus domesticus* Gmelin (Fam. Bovidae). If the bezoar is found during slaughter, the bile is filtered. The

drug is collected, removed from surrounding thin membrane, and dried in the shade.

Description Mostly ovoid, subspheroidal, triangular or cubic, varying in size, 0.6-3 (-4.5) cm in diameter, occasionally tubular or in broken pieces. Externally yellowish-red to brownish-yellow, some with a layer of black lustrous thin membrane, commonly known as "Wujinyi" (black-gold clothing), some rough, with wart-like protuberances, some with crackes. Texture light and fragile, easily peeled, fracture golden yellow, with fine and dense concentric circular lines, some with white core. Odour, aromatic; taste, bitter then sweet, with cool sense; easily broken on chewing but not sticky to the teeth.

Identification (1) Mix some amount of the drug with water, and paint on nails; the colour of the nails turns to yellow, commonly known as "Guajia".

(2) Mount a small quantity of the drug with chloral hydrate TS without heating. Examine under microscope: irregular masses consisting of a number of yellowish-brown or brownish-red small granules. Standing for a moment, the pigments dissolved rapidly, and a bright golden-yellow colour is produced, turning to green after standing for a long time.

(3) To 10 mg of the powder add 20 ml of chloroform, ultrasonicate for 30 minutes, filter, evaporate the filtrate to dryness, dissolve the residue in 1 ml of ethanol as the test solution. Dissolve cholic acid CRS and deoxycholic acid CRS in ethanol to produce a mixture containing 2 mg of each per ml as the refernece solution. Carry out the method for thin layer chromatography (Appendix Ⅵ B), using silica gel G as the coating substance and a mixture of isooctane, ethyl acetate and glacial acetic acid (15 : 7 : 5) as the mobile phase. Apply separately to the plate 2 μl of each of the above two solutions. After developing and removal of the plate, dry in air. Spray with 10% solution of sulfuric acid in ethanol, heat at 105℃ to the spots distinct, examine under ultraviolet light at 365 nm. The two fluorescent spots in the chromatogram obtained with the test solution correspond in position and colour to the spots in the chromatogram obtained with the reference solution.

(4) To 10 mg of the power add 5 ml of a mixture of chloroform and glacial acetic acid (4 : 1), ultrasonicate for 5 minutes, filter, use the filtrate as the test solution. Dissolve bilirubin CRS in the mixture of chloroform glacial acetic acid (4 : 1) produce a solution containing 0.5 mg per ml as the reference solution. Carry out the method for thin layer chromatography (Appendix Ⅵ B), using silica gel G as the coating substance and a mixture of cyclohexane, acetyl acetate, methanol and glacial acetic acid (10 : 3 : 0.1 : 0.1) as the mobile phase. Apply separately to the plate 5 μl of each of the above two solutions. After developing and removal of the plate, dry in air. The spot in the chromatogram obtained with the test solution corresponds in position and colour to the spot in the chromatogram obtained with the reference solution.

Water Carry out the determination of water (Appendix Ⅸ H, method 1), not more than 9.0 per cent.

Total ash Not more than 10.0 per cent (Appendix Ⅸ K).

Free bilirubin Weigh accurately 10 mg of the powder to a 50 ml volumetric flask, add 30 ml of chloroform, heat to warm and cool, dilute with chloroform to volume, mix well, filter and use the successive filtrate. Carry out the method for ultraviolet spectrophotometry and colourimetry (Appendix Ⅴ A), measure the absorbance at 453 nm, not over than 0.70.

Assay ***Cholic acid*** Weigh accurately 0.2 g of the fine powder to a stopper conical flask, accurately add 50 ml of methanol, and weigh. Ultrasonicate for 30 minutes, weigh again, replenish the loss of weight with methanol and filter. Evaporate exactly 25 ml of the successive filtrate to dryness, add 10 ml of 20% sodium hydroxide solution to the residue, heat under reflux for 2 hours, allow to cool, adjust the pH to acidity with 19 ml of dilute hydrochloric acid. Extract with 4 quantities (25, 25, 20 ml and 20 ml) of ethyl acetate, filter the extract solutions through the same piece of defatted cotton spreaded with a small quantity of anhydrous sodium sulfate. Combine the extracts and evaporate to dryness. Dissolve the residue in methanol and transfer to a 10 ml volumetric flask, dilute with methanol to volume and mix well, used as the test solution. Weigh accurately a quantity of cholic acid CRS, previously dried to constant weight at 105℃, dissolve in methanol to produce a solution containing 0.48 mg per ml as the reference solution. Carry out the method for thin layer chromatography (Appendix Ⅵ B), using silica gel G as the coating substance and a mixture of isooctane, *n*-butyl acetate, glacial acetic acid and formic acid (8 : 4 : 2 : 1) as the mobile phase. Apply separately to the plate 2 μl of the test solution, 1 μl and 3 μl of the reference solution alternatively. After developing to 14-17 cm from the base line and removal of the plate, dry in air, spray with a 30% solution of sulfuric acid in ethanol and heat at 105℃ to visualize clearly. Cover the plate with a piece of glass of the same size and fix up with tape. Carry out the method for thin layer chromatography (thin layer chromatographic scanning method) (Appendix Ⅵ B), scan at the wavelength of $\lambda_S = 380$ nm, $\lambda_R = 650$ nm. Measure the integration values of the absorbance from the test solution and the reference solution, respectively, and calculated the content.

It contains not less than 4.0 per cent of cholic acid ($C_{24}H_{40}O_5$), calculated with reference to the dried drug.

Bilirubin *Reference solution* Dissolve about 10 mg of bilirubin CRS, accurately weighed, with a quantity of chloroform in an 100 ml amber volumetric flask, and dilute to volume. Transfer accurately 5 ml to a 50 ml amber volumetric flask, add ethanol to volume, mix well (containing 0.01 mg of bilirubin per ml).

Calibration standard Transfer separately 1, 2, 3, 4 ml and 5 ml of the reference solution, accurately measured, to stopper test tubes and dilute with ethanol to 9 ml, add separately 1 ml of the diazotied sulfanilic acid solution (solution A: to 0.1 g of sulfanilic acid, add 1.5 ml hydrochloric acid, dilute with water to 100 ml; solution B: dissolve 0.5 g of sodium nitrite with water to 100 ml. Keep in a refrigerator. Mix 10 ml of solution A and 0.3 ml of solution B well before using), mix well, allow to stand in a dark place at 15-20℃ for 1 hour. Perform a blank in the same reagents. Carry out the method of ultraviolet spectrophotometry and colourimetry (Appendix Ⅴ A), determine the absorbance at 533 nm and plot the standard curve, using absorbance as ordinate and concentration as abscissa.

Procedure Weigh accurately 10 mg of the fine powder to a conical flask, add 60 ml of a mixture solution of chloroform and ethanol (7 : 3) and 1 drop of hydrochloric acid, mix well, heat under reflux on a water bath for 30 minutes, allow to cool. Transfer the extract to a 100 ml amber volumetric flask, wash the container with the above mixture solution. Combine the washings into the volumetric flask, dilute with the mixture to volume, mix well. Transfer accurately 10 ml of the supernatant to a 50 ml amber volumetric flask, dilute with ethanol to volume, mix well. Transfer accurately 3 ml of the solution to a stopper test tube. Determine the absorbance as described under calibration standard, beginning at the words "add ethanol to 9 ml", read the weight of bilirubin (mg) from the standard curve and calculate the

content of bilirubin ($C_{33}H_{36}N_4O_6$).
It contains not less than 35.0 per cent of bilirubin ($C_{33}H_{36}N_4O_6$) calculated with reference to the dried drug.

Action To restore consciousness by reducing *fire* and eliminating *phlegm*, relieve convulsion, and counteract *toxicity*.

Indications Impairment of consciousness in febrile diseases and stroke; infantile convulsion, epilepsy, mania; sore throat, ulcers in the mouth; carbuncles and boils.

Usage and dosage 0.15-0.35 g, mostly used in pills or powder; for external use, appropriate quantity is ground into powder and applied topically.

Storage Preserve in well closed container, stored in a cool and dry place, protected from light, moisture and pressure.

Calculus Bovis Artifactus (人工牛黄, Rengong Niuhuang)

Artificial Cow-bezoan

Artificial Cow-bezoan is prepared with powder of cow bile, cholic acid, hyodeoxycholic acid, taurine, bilirubin, cholesterol and trace elements, etc.

Description Loose powder, yellow. Taste bitter, slightly sweet.

Identification (1) To the test solution obtained under Assay of Bilirubin, carry out the method of ultraviolet spectrophotometry and colourimetry (Appendix Ⅴ A), the maximum absorption of the solution exhibits at 453 nm.
(2) To 0.1 g of the powder add a quantity of methanol in a 10 ml volumetric flask, ultrasonicate for 5 minutes, dilute with methanol to volume, mix well, allow to stand, and use the supernatant as the test solution. Dissolve cholic acid CRS and hyodeoxycholic acid CRS in methanol to produce a mixture containing 1 mg of each per ml as the reference solution. Carry out the method for thin layer chromatography (Appendix Ⅵ B), using silica gel G as the coating substance and a mixture of *n*-hexane, ethyl acetate, acetic acid and methanol (20 : 25 : 2 : 3) as the mobile phase. Apply separately to the plate 4 μl of the test solution and 2 μl of the reference solution. After developing and removal of the plate, dry in air and spray with a 10% solution of phosphomolybdic acid in ethanol, and heat at 105℃ to the spots clear. The spots in the chromatogram obtained with the test solution correspond in position and colour to the spots obtained with the reference solution.
(3) To 10 mg of Pulvis Fellis Bovis reference drug add a quantity of methanol, and ultrasonicate to extract completely, add methanol again to 10 ml, mix well, allow to stand, and use the supernatant as the reference drug solution. Carry out the method for thin layer chromatography (Appendix Ⅵ B), using silica gel G as the coating substance and a mixture of toluene, glacial acetic acid and water (7.5 : 10 : 0.3) as the mobile phase. Apply separately to the plate 8 μl of the test solution obtained under Identification (2) and the above reference drug solution. After developing and removal of the plate, dry in air and spray with a 10% solution of phosphomolybdic acid in ethanol, and heat at 105℃ to the spots clear. The spots in the chromatogram obtained with the test solution correspond in position and colour to the spots obtained with the reference drug solution.
(4) To 50 mg of the powder add 5 ml of water, ultrasonicate for 5 minutes, add methanol to 10 ml, allow to stand, and use the supernatant as the test solution. Dissolve taurine CRS in methanol to produce a solution containing 0.5 mg per ml as the reference solution. Carry out the method for thin layer chromatography (Appendix Ⅵ B), using silica gel G as the coating substance and the mixture of *n*-butanol, ethanol, acetic acid and water (4 : 1 : 2 : 1) as the mobile phase. Apply separately to the plate 2 μl of each of the above two solutions. After developing and removal of the plate, dry in air and heat at 105℃ for 10 minutes, spray with a 1% solution of ninhydrine in ethanol, and heat at 105℃ to the spots clear. The spot in the chromatogram obtained with the test solution corresponds in position and colour to the spot obtained with the reference solution.

Water Carry out the method for determination of water (Appendix Ⅸ H, method 1), not more than 5.0 per cent.

Assay ***Cholic acid*** *Reference solution* Weigh accurately 12.5 mg of cholic acid CRS to a 25 ml volumetric flask, dissolve in 60% glacial acetic acid and dilute to volume, mix well (containing 0.5 mg per ml).

Calibration standard Measure accurately 0.2 ml, 0.4 ml, 0.6 ml, 0.8 ml and 1 ml of the reference solution, respectively, to stopper test tubes, each tube add 60% glacial acetic acid to 1.0 ml, then add 1.0 ml of freshly prepared furfural solution (1→100), and mix well. Keep in an ice-bath for 5 minutes, accurately add 13 ml of sulfuric acid solution (a mixture of 50 ml sulfuric acid in 65 ml water), mix well, heat on a water bath at 70℃ for 10 minutes, and immediately cool in an ice-bath for 2 minutes. Use the mixture of the corresponding reagents as a blank. Carry out the method for ultraviolet spectrophotometry and colourimetry (Appendix Ⅴ A), measure the absorbance at 605 nm and plot the standard curve, using absorbance as ordinate and concentration as abscissa.

Procedure Weigh accurately 0.1 g of the powder to a 50 ml volumetric flask, add a quantity of 60% glacial acetic acid and ultrasonicate for 5 minutes, dilute with the same solvent to volume, mix well and filter. Discard the initial filtrate, measure accurately 1 ml of the successive filtrate in two stopper test tubes labeled A and B, respectively, add 1 ml of freshly prepared furfural solution in tube A, and 1 ml of water in tube B as the blank. Carry out the method as described under *Calibration standard*, beginning at the words "Keep in an ice-bath for 5 minutes", measure the absorbance, read out the weight of cholic acid (mg) in the test sclution from the standard curve, and calculate the content.
It contains not less than 13.0 per cent of cholic acid ($C_{24}H_{40}O_5$), calculated with reference to the dried drug.

Bilirubin *Reference solution* Weigh accurately 10 mg of bilirubin CRS to a 100 ml brown volumetric flask, add 80 ml of chloroform, ultrasonicate to dissolve completely, dilute with chloroform to volume and mix well. Measure accurately 10 ml to a 50 ml brown volumetric flask, dilute with chloroform to volume, and mix well (containing 20 μg per ml).

Calibration standard Measure accurately 4 ml, 5 ml, 6 ml, 7 ml and 8 ml of the reference solution, respectively, to 25 ml brown volumetric flasks, dilute with chloroform to volume, and mix well. Carry out the method for ultraviolet spectrophotometry and colourimetry (Appendix Ⅴ A), measure the absorbance at 453 nm and plot the standard curve, using absorbance as ordinate and concentration as abscissa.

Procedure Weigh accurately 80 mg of the powder to a 100 ml brown volumetric flask, add 80 ml of chloroform, ultrasonicate to dissolve completely, dilute with chloroform to volume, mix well and filter. Discard the initial filtrate and use the successive filtrate as the test solution. Measure the absorbance at 453 nm, read out the weight of bilirubin (mg) in the test solution from the standard curve, and calculate the content.

It contains not less than 0.63 per cent of bilirubin ($C_{32}H_{26}N_4O_6$), calculated with reference to the dried drug.

Action To clear *heat* and *toxin*, resolve *phlegm* and relieve convulsion.

Indications Delirium and coma due to *phlegm-heat*, infantile acute convulsion, sore throat, sores on the mouth and tongue, and carbuncles and boils.

Usage and dosage 0.15-0.35 g, used in a formula, appropriate quantity for external use.

Storage Preserve in well closed containers, protected from moisture and light, stored in a cool place.

Attached:

Bilirubin
(胆红素, Danhongsu)

Bilirubin is prepared with pig (or cow) bile by extracting and processing.

Description Crystal powder, orange to reddish-brown.

Identification (1) To the test solution obtained under Assay of Bilirubin, carry out the method of ultraviolet spectrophotometry and colourimetry (Appendix Ⅴ A), determine and plot the absorption curve from 400 nm to 500 nm. It should be same with the profile obtained with the bilirubin CRS, and the maximum absorption exhibits at 453 nm.
(2) Dissolve a quantity of the powder in chloroform to produce a solution containing 0.1 mg per ml as the test solution. Dissolve bilirubin CRS in chloroform as the reference solution in the same manner. Carry out the method for thin layer chromatography (Appendix Ⅵ B), using silica gel G as the coating substance and a mixture of toluene, ethyl acetate and glacial acetic acid (10 : 1 : 0.5) as the mobile phase. Apply separately to the plate 10 μl of each of the above two solutions. After developing and removal of the plate, dry in air. The spot in the chromatogram obtained with the test solution corresponds in position and colour to the spot obtained with the reference solution.

Loss on drying Dry about 0.5 g of the powder at 60℃ for 4 hours in vacuum, losses not more than 2.0 per cent (Appendix Ⅸ G).

Assay Weigh accurately 10 mg of the powder, grind with a small quantity of chloroform, transfer to a 100 ml brown volumetric flask, ultrasonicate to dissolve completely, cool immediately, dilute with chloroform to volume, and mix well. Measure accurately 5 ml to another 100 ml brown volumetric flask, dilute with chloroform to volume, and mix well. Carry out the method for ultraviolet spectrophotometry and colourimetry (Appendix Ⅴ A), measure the absorbance at 453 nm, calculate the content according to the absorption coefficient of bilirubin ($E_{1cm}^{1\%}$) being 1038.
It contains not less than 90.0 per cent of bilirubin ($C_{32}H_{26}N_4O_6$), calculated with reference to the dried drug.

Usage Material for making Artificial Cow-bezoan.

Storage Preserve in well closed container, protected from moisture and light.

Hyodeoxycholic Acid
(猪去氧胆酸, Zhu Quyang Dansuan)

Hyodeoxycholic Acid is prepared with pig bile by extracting and processing.
Chemically, it is 3α,6α-dihydroxyl-5β-cholanic acid.

Description Powder, white or whitish. Odour slight; taste, slight bitter.

Easily dissoluble in ethanol, slightly dissoluble in acetone, rarely dissoluble in ethyl acetate, chloroform and ether, hardly dissoluble in water.

Melting point Not lower than 170℃ (Appendix Ⅶ C), decomposing while melting.

Identification To 5 mg of the powder add 2 ml of 60% glacial acetic acid and 1 ml of freshly prepared furfural solution and mix well. Separate the solution into two parts, and transfer to two test tubes labeled A and B, respectively. Add 10 ml of sulfuric acid (7→10) in tube A, and 10 ml of sulfuric acid (4→10) in tube B, keep both tubes on a water bath at 70℃ for several minutes. A red colour is produced in tube A, and gradually turns to reddish-violet, and the colour in tube B is not changed.

Alcohol solubility Heat 0.5 g of the powder with 50 ml of ethanol at 60℃ to dissolve completely, stand for 1 hour at 20-25℃, the solution should be clear and no obvious precipitate.

Loss on drying Dry a quantity of the powder at 105℃ to constant weight, losses not more than 1.0 per cent (Appendix Ⅸ G).

Residue on ignition Not more than 0.2 per cent (Appendix Ⅸ J).

Usage Material for making Artificial Cow-bezoan.

Storage Preserve in well closed container.

Pulvis Fellis Bovis
(牛胆粉, Niudanfen)

Powder Cow-bile

Powder Cow-bile is the preparation of cow bile.

Description Powder, yellowish-brown. Taste, bitter, hygroscopic.

Identification To 50 mg of the powder add 10 ml of methanol, ultrasonicate to extract completely, mix well, allow to stand, and use the supernatant as the test solution. Prepare a solution of 50 mg of Pulvis Fellis Bovis reference drug in the same manner as the reference drug solution. Carry out the method for thin layer chromatography (Appendix Ⅵ B), using silica gel G as the coating substance and a mixture of toluene, glacial acetic acid and water (7.5 : 10 : 0.3) as the mobile phase. Apply separately to the plate 4 μl of each of the above two solutions. After developing and removal of the plate, dry in air. Spray with a 10% solution of phosphomolybdic acid in ethanol and heat at 105℃ for 5 minutes. The spots in the chromatogram obtained with the test solution correspond in position and colour to the spots obtained with the reference drug solution.

Water Carry out the method for determination of water (Appendix Ⅸ H, method 1), not more than 5.0 per cent.

Pulvis Fellis Suis To 0.1 g of the powder add 10 ml of methanol, ultrasonicate and filter. Evaporate the filtrate nearly to dryness, dissolve partially in 5 ml of a 2.5 mol/L solution of sodium hydroxide, and transfer to a stopper test tube. Hydrolyze on a water bath for 5 hours, cool, and add dropwise hydrochloric acid to pH 2-3. Extract with three 10-ml quantities of ethyl acetate, evaporate the extracts to dryness, dissolve the residue in 1 ml of methanol as the test solution. Dissolve hyodeoxycholic acid CRS in methanol to produce a solution containing 1 mg per ml as the reference solution. Carry out the method for thin layer chromatography (Appendix Ⅵ B), using silica gel G as the coating substance and a mixture of isooctane, *n*-butyl ether and glacial acetic acid (8 : 5 : 5) as the mobile phase. Apply separately to the plate 2 μl of each of the above two solutions. After developing and removal of the plate, dry in air. Spray with a 10% solution of phosphomolybdic acid in ethanol, and heat at 105℃ to the spots clear. The spots in the chromatogram obtained with the test solution should not be corresponding in position and colour to the spot obtained with the reference solution.

Assay *Reference solution* Weigh accurately 12.5 mg of cholic acid CRS to a 25 ml volumetric flask, dissolve in 60% glacial acetic acid and dilute to volume, mix well (containing 0.5 mg of cholic acid per ml).

Calibration standard Measure accurately 0.2 ml, 0.4 ml, 0.6 ml,

0.8 ml and 1 ml of the reference solution, respectively, to stopper test tubes, each tube add 60% glacial acetic acid to 1.0 ml, then add 1.0 ml of freshly prepared furfural solution (1→100), keep in an ice-bath for 5 minutes, accurately add 13 ml of sulfuric acid solution (a mixture of 50 ml sulfuric acid in 65 ml water), mix well, heat on a water bath at 70℃ for 10 minutes, and immediately cool in an ice-bath for 2 minutes. Use the mixture of the corresponding reagents as a blank. Carry out the method for ultraviolet spectrophotometry and colourimetry (Appendix Ⅴ A), measure the absorbance at 605 nm and plot the standard curve, using absorbance as ordinate and concentration as abscissa.

Procedure Grind 60 mg, weighed accurately, with a quantity of 60% glacial acetic acid, transfer to a 50 ml volumetric flask, dilute to volume with 60% glacial acetic acid, mix well and filter. Discard the initial filtrate, measure accurately 1 ml of the successive filtrate in two stopper test tubes labeled A and B, respectively, add 1 ml of freshly prepared furfural solution in tube A, and 1 ml of water in tube B as a blank. Carry out the method as described under *Calibration standard*, beginning at the words "keep in an ice-bath for 5 minutes", measure the absorbance, read out the weight of cholic acid (mg) in the test solution from the standard curve, and calculate the content.

It contains not less than 42.0 per cent of cholic acid ($C_{24}H_{40}O_5$), calculated with reference to the dried drug.

Usage Material for making Artificial Cow-bezoan.

Storage Preserve in tightly closed container, protected from moisture and light, stored in a cool place.

Cholic Acid
(胆酸，Dansuan)

Cholic Acid is prepared with cow or sheep bile by extracting and processing.

Description Powder, white or whitish. Odour, slight; taste, bitter.

Identification Ultrasonicate 0.1 g with 2 ml of 60% glacial acetic acid for 10 minutes to dissolve, filter, transfer 1 ml of the filtrate in a test tube, add 1 ml of freshly prepared furfural solution (1→100) and 13 ml of sulfuric acid solution (a mixture of 50 ml sulfuric acid in 65 ml water), and heat on a water bath at 70℃. A bluish violet colour should be produced.

Alcohol solubility Heat and ultrasonicate 0.5 g with 50 ml of ethanol at 60℃ to dissolve completely, stand for 1 hour at 20-25℃, the solution should be clear and no obvious precipitate.

Loss on drying Dry a quantity of the powder at 105℃ for 2 hours, losses not more than 1.0 per cent (Appendix Ⅸ G).

Residue on ignition Not more than 0.3 per cent (Appendix Ⅸ J), using 1.0 g.

Assay ***Reference solution*** Weigh accurately 12.5 mg of cholic acid CRS, dried previously to constant weight at 105℃, to a 25 ml volumetric flask, dissolve in 60% glacial acetic acid and dilute to volume, mix well (containing 0.5 mg of cholic acid per ml).

Calibration standard Measure accurately 0.2 ml, 0.4 ml, 0.6 ml, 0.8 ml and 1 ml of the reference solution, respectively, to stopper test tubes, each tube add 60% glacial acetic acid to 1.0 ml, then add 1.0 ml of freshly prepared furfural solution (1→100), and mix well. Keep in an ice-bath for 5 minutes, accurately add 13 ml of sulfuric acid solution (a mixture of 50 ml sulfuric acid in 65 ml water), mix well, heat on a water bath at 70℃ for 10 minutes, and immediately cool in an ice-bath for 2 minutes. Use the mixture of the corresponding reagents as a blank. Carry out the method for ultraviolet spectrophotometry and colourimetry (Appendix Ⅴ A), measure the absorbance at 605 nm and plot the standard curve, using absorbance as ordinate and concentration as abscissa.

Procedure Weigh accurately 0.15 g to a 50 ml volumetric flask, add a quantity of 60% glacial acetic acid and ultrasonicate, take out and cool, dilute with 60% glacial acetic acid to volume, mix well and filter. Discard the initial filtrate, measure accurately 5 ml of the successive filtrate to a 50 ml volumetric flask, dilute with 60% glacial acetic acid to volume. Measure accurately 1 ml in two stopper test tubes labeled A and B, respectively, add 1 ml of freshly prepared furfural solution in tube A, and 1 ml of water in tube B as a blank. Carry out the method as described under *Calibration standard*, beginning at the words "Keep in an ice-bath for 5 minutes", measure the absorbance, read out the weight of cholic acid (mg) in the test solution from the standard curve, and calculate the content.

It contains not less than 80.0 per cent of cholic acid ($C_{24}H_{40}O_5$), calculated with reference to the dried drug.

Usage Material for making Artificial Cow-bezoan.

Storage Preserve in well closed container.

Cholesterol
(胆固醇，Danguchun)

Cholesterol is prepared with encephalon of cow, sheep or pig, by extracting and processing.

Description Crystal or crystal powder, white or whitish. Odour, slight.

Melting point Not lower than 140℃ (Appendix Ⅵ C).

Identification (1) Dissolve 10 mg in 1 ml of chloroform, and add 1 ml of sulfuric acid. A blood red colour is produced in chloroform layer and a green fluorescence is produced in sulfuric acid layer.

(2) Dissolve 5 mg in 2 ml of chloroform, add 1 ml of acetic anhydrite and 1 drop of sulfuric acid. A pink colour is produced and immediately turns to red, then turns to blue and light green at last.

Alcohol solubility Heat gently 0.4 g with 50 ml of ethanol to dissolve completely, stand for 2 hours, the solution should be clear and no obvious precipitate.

Acidity Weigh accurately 1 g to a conical flask, dissolve in 10 ml of ether, add accurately 10 ml of a 0.1 mol/L solution of sodium hydroxide, shake for 1 minute, heat gently to expel the ether, then boil for 5 minutes, and cool. Add 2 drops of phenolphthalein IS, titrate with sulfuric acid VS (0.1 mol/L) to the end point. Carry out the above test with a blank solution in the same manner. The consumptive difference between the test solution and the blank solution should not be more than 0.5 ml.

Loss on drying Dry a quantity of the powder at 105℃ for 3 hours, losses not more than 1.0 per cent (Appendix Ⅸ G).

Residue on ignition Not more than 0.2 per cent (Appendix Ⅸ J), using 1.0 g.

Usage Material for making Artificial Cow-bezoan.

Storage Preserve in well closed container, protected from light.

Calculus Bovis Sativus
(体外培育牛黄，Tiwai Peiyu Niuhuang)

Cow-bezoan Cultured in Vitro

Cow-bezoan Cultured in Vitro is prepared with fresh bile of *Bos taurus domesticus* Gmelin (Fam. Bovide) as mother liquor, adding deoxycholic acid, cholic acid and compound calcium bilirubin, etc.

Description Spheroidal or subspheroidal, 0.5-3 cm in diameter. Surface smooth, yellowish-red to brownish-yellow. Texture light and fragile, fracture with fine concentric circular lines. Odour, aromatic; taste, bitter then sweet, with cool sense; easily broken on chewing, but not sticky to teeth.

Identification (1) Mix a small quantity of the powder with

water, and paint it on nails. The colour of nails turns to yellow.

(2) Mount a small quantity of the powder with chloral hydrate TS without heating, examine under microscope: irregular masses mostly aggregated by numbers of yellowish-brown or brownish-red small granules. Stand for a moment, the pigments dissolved rapidly, and a bright golden-yellow colour is produced, turning to green after stand for a long time.

(3) To a small quantity of the powder add 1 ml of chloroform, mix well, add 2 drops of sulfuric acid and 2 drops of strong hydrogen peroxide solution (30%), and shake. A green colour is produced immediately.

(4) To 0.1 g of the powder add 1 ml of hydrochloric acid and 10 ml of chloroform, shake and mix well, a yellowish-brown colour is shown in the chloroform layer. Separate the chloroform layer, add 5 ml of barium hydroxide TS and shake, a yellowish-brown precipitate is produced immediately. Remove the water layer and the precipitate, to 1 ml of chloroform solution add 1 ml of acetic anhydrite and 2 drops of sulfuric acid, mix well and stand. A green colour is produced.

(5) To 10 mg of the powder add 20 ml of chloroform, ultrasonicate for 30 minutes, filter, evaporate the filtrate to dryness, and dissolve the residue in 1 ml of ethanol as the test solution. Dissolve cholic acid CRS and deoxycholic acid CRS in ethanol to produce a mixture containing 2 mg of each per ml as the reference solution. Carry out the method for thin layer chromatography (Appendix Ⅵ B), using silica gel G as the coating substance and a mixture of isooctane, ethyl acetate and glacial acetic acid (15 : 7 : 5) as the mobile phase. Apply separately to the plate 2 μl of the above two solutions. After developing and removal of the plate, dry in air. Spray with a 10% solution of sulfuric acid in ethanol, heat at 105℃ to the spots clear, and examine under ultraviolet light at 365 nm. The fluorescent spot in the chromatogram obtained with the test solution corresponds in position and colour to the spot obtained with the reference solution.

Water Carry out the method for determination of water (Appendix Ⅸ H, method 1), not more than 9.0 per cent.

Free Bilirubin To 10 mg of the fine powder add 5 ml of chloroform, heat to warm and shake. Filter, discard the initial filtrate and use the successive filtrate. Carry out the method for ultraviolet spectrophotometry and colourimetry (Appendix Ⅴ A), measure the absorbance at 453 nm, not more than 0.70.

Assay ***Cholic acid*** Weigh accurately 0.2 g of the fine powder to a stopper conical flask, accurately add 50 ml of methanol, tightly stopper and weigh, ultrasonicate for 30 minutes, weigh again, replenish the loss of weight with methanol, mix well and filter. Evaporate accurately 25 ml of the successive filtrate to dryness, dissolve the residue in 10 ml of 20% solution of sodium hydroxide, heat under reflux for 2 hours, cool, and adjust pH to acidic with 19 ml of dilute hydrochloric acid. Extract with 4 quantities (25 ml, 25 ml, 20 ml and 20 ml) of ethyl acetate, filter the four ethyl acetate extracts through the same piece of defatted cotton covered with a small quantity of anhydrous sodium sulfate. Combine the filtrates, evaporate to dryness, dissolve the residue in methanol and transfer to a 10 ml volumetric flask, dilute with methanol to volume and mix well, used as the test solution. Dissolve a quantity of cholic acid CRS, previously dried to constant weight at 105℃ and weighed accurately, in methanol to produce a solution containing 0.48 mg per ml as the reference solution. Carry out the method for thin layer chromatography (Appendix Ⅵ B), using silica gel G as the coating substance and a mixture of isooctane, *n*-butyl acetate, glacial acetic acid and formic acid (8 : 4 : 2 : 1) as the mobile phase. Apply separately to the plate 2 μl of the test solution, 1 μl and 3 μl of the reference solutions alternatively. After developing to 14-17 cm, removal of the plate, dry in air, spray with a 30% solution of sulfuric acid in ethanol and heat at 105℃ to the spots clear. Cover the plate with a piece of glass of the same size and fix up with tape. Carry out the method for thin layer chromatography (Appendix Ⅵ B, thin layer chromatographic scanning method) and scan at wavelength of $\lambda_S = 380$ nm, $\lambda_R = 650$ nm. Measure the integration values of the absorbance from the test solution and the reference solution respectively, and calculate the content.

It contains not less than 6.0 per cent of cholic acid ($C_{24}H_{40}O_5$), calculated with reference to the dried drug.

Bilirubin *Reference solution* Weigh accurately 10 mg of bilirubin CRS to a 100 ml brown volumetric flask, dissolve in chloroform and dilute to volume, and mix well. Transfer accurately 5 ml to a 50 ml brown volumetric flask, dilute to volume with ethanol, and mix well (containing 10 μg per ml).

Calibration standard Measure accurately 1 ml, 2 ml, 3 ml, 4 ml and 5 ml of the reference solution, respectively, to stopper test tubes, each tube add ethanol to 9 ml, and then add 1 ml of the diazotized solution (a mixture of 10 ml of solution A and 0.3 ml of solution B, mixed before use. Solution A: dissolve 0.1 g of sulfanilic acid in 1.5 ml hydrochloric acid, dilute with water to 100 ml. Solution B: dissolve 0.5 g of sodium nitrite in water and dilute to 100 ml, keep in a refrigerator.), mix well, and allow to stand at 15-20℃ for 1 hour in a dark place. Use the mixture of the corresponding reagents as a blank. Carry out the method for ultraviolet spectrophotometry and colourimetry (Appendix Ⅴ A), measure the absorbance at 533 nm and plot the standard curve, using absorbance as ordinate and concentration as abscissa.

Procedure Weigh accurately 10 mg of the fine powder to a conical flask, add 60 ml of a mixture of chloroform and ethanol (7 : 3) and 1 drop of hydrochloric acid, mix well, heat under reflux on a water bath for 30 minutes. Cool and transfer to a 100 ml brown volumetric flask, wash the container with the same mixture, combine the washings to the volumetric flask, dilute with the mixture to volume, and mix well. Transfer accurately 10 ml of the supernatant to a 50 ml brown volumetric flask, dilute with ethanol to volume, and mix well. Transfer accurately 3 ml of the solution to a stopper test tube, carry out the method as described under *Calibration standard*, beginning at the words "add ethanol to 9 ml", measure the absorbance, and read out the weight of bilirubin (mg) from the standard curve, and calculate the content.

It contains not less than 35.0 per cent of bilirubin ($C_{33}H_{36}N_4O_6$), calculated with reference to the dried drug.

Action To clear *heart-fire*, eliminate *phlegm* for resuscitation, cool the liver, tranquilize endogenous wind, and remove toxic materials.

Indications Impaired consciousness in febrile diseases, delirium, mental confusion due to phlegm, convulsion, epilepsy, swollen and painful throat, sores on the mouth and tongue, carbuncles and boils.

Usage and dosage 0.15-0.35 g, mostly used in pills or powder form; appropriate quantity for external use.

Storage Preserve in well closed container, protected from light, moisture and pressure, stored under room temperature.

Period of validity Three years.

Attached:

Deoxycholic Acid (去氧胆酸，Quyang Dansuan)

Deoxycholic Acid is prepared with cow bile by extracting and processing.

Description Crystal powder, white. Odour, slight; taste, slight bitter.
Easily dissoluble in glacial acetic acid and ethanol, indissoluble in water.

Identification Dissolve 10 mg of the powder in 5 ml of ethanol as the test solution. Dissolve deoxycholic acid CRS in ethanol to produce a solution containing 2 mg of each per ml as the reference solution. Carry out the method for thin layer chromatography (Appendix Ⅵ B), using silica gel G as the coating substance and a mixture of isooctane, ethyl acetate and glacial acetic acid (15 ∶ 7 ∶ 5) as the mobile phase. Apply separately to the plate 2 μl of the above two solutions. After developing and removal of the plate, and dry in air. Spray with a 10% solution of sulfuric acid in ethanol, heat at 105℃ to the spots clear. Examine under ultraviolet light at 365 nm. The fluorescent spot in the chromatogram obtained with the test solution corresponds in position and colour to the spot obtained with the reference solution.

Loss on drying Dry a quantity of the powder at 105℃ for 4 hours, losses not more than 0.5 per cent (Appendix Ⅸ G).

Residue on ignition Not more than 0.2 per cent (Appendix Ⅸ J).

Assay Weigh accurately 0.5 g of the powder, add 60 ml of neutral ethanol (indicated by phenolphthalein IS), heat on a water bath to dissolve, and cool. Add several drops of phenolphthalein IS and 20 ml of cooled water boiled freshly, titrate with sodium hydroxide VS (0.1 mol/L), again add 100 ml of cooled water boiled freshly while near the end point, and continue titrate to the end point. Each per ml of sodium hydroxide (0.1 mol/L) corresponds to 39.26 mg of deoxycholic acid ($C_{24}H_{40}O_4$).
It contains not less than 95.0 per cent of deoxycholic acid ($C_{24}H_{40}O_4$), calculated with reference to the dried drug.

Usage Material for making Cow-bezoan Cultured in Vitro.

Storage Preserve in well closed container.

Cholic Acid (胆酸，Dansuan)

Cholic Acid is prepared with cow or sheep bile, or bile paste, by extracting and processing.

Description Crystal powder, white. Odour, slight; taste, bitter.

Identification Dissolve 10 mg of the powder in 5 ml of ethanol as the test solution. Dissolve cholic acid CRS in ethanol to produce a solution containing 2 mg of each per ml as the reference solution. Carry out the method for thin layer chromatography (Appendix Ⅵ B), using silica gel G as the coating substance and a mixture of isooctane, ethyl acetate and glacial acetic acid (15 ∶ 7 ∶ 5) as the mobile phase. Apply separately to the plate 2 μl of the above two solutions. After developing and removal of the plate, and dry in air. Spray with a 10% solution of sulfuric acid in ethanol, heat at 105℃ to the spots clear. Examine under ultraviolet light at 365 nm. The fluorescent spot in the chromatogram obtained with the test solution corresponds in position and colour to the spot obtained with the reference solution.

Loss on drying Dry a quantity of the powder at 105℃ for 4 hours, losses not more than 0.5 per cent (Appendix Ⅸ G).

Residue on ignition Not more than 0.2 per cent (Appendix Ⅸ J).

Assay Weigh accurately 0.4 g of the powder to a 250 ml conical flask, add 20 ml of water and 40 ml of ethanol, cover with a watch glass, slowly heat on a water bath to dissolve completely, and cool. Add 5 drops of phenolphthalein IS and titrate with sodium hydroxide VS (0.1 mol/L). Each per ml of sodium hydroxide (0.1 mol/L) corresponds to 40.86 mg of cholic acid ($C_{24}H_{40}O_5$).
It contains not less than 95.0 per cent of cholic acid ($C_{24}H_{40}O_5$), calculated with reference to the dried drug.

Usage Material for making Cow-bezoan Cultured in Vitro.

Storage Preserve in well closed container.

Compound Calcium Bilirubin (复合胆红素钙，Fuhe Danhongsugai)

Compound Calcium Bilirubin is made of cow bile, bilirubin and saturated solution of calcium hydroxide.

Description Powder, brownish-red or brownish-yellow. Taste stinking.

Identification To 5 mg of the powder add 15 ml of chloroform and 0.1 ml of hydrochloric acid (5→10), ultrasonicate for 30 minutes, add 30 ml of chloroform, mix well, filter, and use the successive filtrate as the test solution. Dissolve bilirubin CRS in chloroform to produce a solution containing 0.1 mg per ml as the reference solution. Carry out the method for thin layer chromatography (Appendix Ⅵ B), using silica gel G as the coating substance and a mixture of toluene, ethyl acetate and glacial acetic acid (10 ∶ 1 ∶ 0.5) as the mobile phase. Apply separately to the plate 10 μl of the above two solutions. After developing and removal of the plate, dry in air. The spot in the chromatogram obtained with the test solution corresponds in position and colour to the spot obtained with the reference solution.

Water Carry out the method for determination of water (Appendix Ⅸ H, method 1), not more than 5.0 per cent.

Assay ***Reference solution*** Weigh accurately 10 mg of bilirubin CRS to a 100 ml brown volumetric flask, dissolve in chloroform and dilute to volume, and mix well. Transfer accurately 5 ml to a 50 ml brown volumetric flask, dilute to volume with ethanol, and mix well (containing 10 μg per ml).

Calibration standard Measure accurately 1 ml, 2 ml, 3 ml, 4 ml and 5 ml of the reference solution, respectively, to stopper test tubes, each tube add ethanol to 9 ml, and then add 1 ml of the diazotized solution (a mixture of 10 ml of solution A and 0.3 ml of solution B, mixed before use. Solution A: dissolve 0.1 g of sulfanilic acid in 1.5 ml hydrochloric acid, dilute with water to 100 ml. Solution B: dissolve 0.5 g of sodium nitrite in water and dilute to 100 ml, keep in a refrigerator.), mix well, and allow to stand at 15-20℃ for 1 hour in a dark place. Use the mixture of the corresponding reagents as a blank. Carry out the method for ultraviolet spectrophotometry and colourimetry (Appendix Ⅴ A), measure the absorbance at 533 nm and plot the standard curve, using absorbance as ordinate and concentration as abscissa.

Procedure Weigh accurately 10 mg of the fine powder to a conical flask, add 60 ml of a mixture of chloroform and ethanol (7 ∶ 3) and 1 drop of hydrochloric acid, mix well, heat under reflux on a water bath for 30 minutes. Cool and transfer to a 100 ml brown volumetric flask, wash the container with the same mixture, combine the washings to the volumetric flask, dilute with the mixture to volume, and mix well. Transfer accurately 10 ml of the supernatant to a 50 ml brown volumetric flask, dilute with ethanol to volume, and mix well. Transfer accurately 3 ml of the solution to a stopper test tube, carry out the method as described under *Calibration standard*, beginning at the words "add ethanol to 9 ml", measure the absorbance, read out the weight of bilirubin (mg) from the standard curve, and calculate the content.
It contains not less than 43.0 per cent of bilirubin ($C_{33}H_{36}N_4O_6$), calculated with reference to the dried drug.

Usage Material for making Cow-bezoan Cultured in Vitro.

Storage Preserve in well closed container.

Calomelas
(轻粉，Qingfen)

Calomel

Calomel is a mercurous chloride (Hg_2Cl_2).

Description White, lustrous, scaly or snow-flake like crystals, or a crystalline powder. Gradually darkened on exposing to light. Odour, slight; almost tasteless.

Identification (1) Turns to black with calcium hydroxide TS, ammonia TS or sodium hydroxide TS.
(2) Heat a mixture of equal quantities of the drug and anhydrous sodium carbonate in a dry test tube, it decomposes to produce metallic mercury, condensed on the tube wall. Dissolve the residue left in test tube with dilute nitric acid TS and filter, the filtrate yields the reactions characteristic of chlorides (Appendix Ⅳ).

Mercuric chloride Shake 2 g of the drug in 20 ml of ether for 5 minutes, filter, allow to stand and expel the ether. Dissolve the residue in 10 ml of water and 2 drops of dilute nitric acid TS, carry out the limit test for chlorides (Appendix Ⅸ C). Any turbidity produced is not more intense than a reference solution prepared with 7 ml of standard solution of sodium chloride.

Mercury globule Spread 1 g of the drug on a piece of white paper, examine under a lens, no mercury globule should be found.

Residue on ignition Not more than 0.1 per cent (Appendix Ⅸ J).

Assay To about 0.5 g of the powder, accurately weighed, in a stopper flask, add 10 ml of water, shake well, add 50 ml of iodine (0.1 mol/L) VS, accurately measured, stopper tightly, shake vigorously until most of the powder is dissolved, add 8 ml of potassium iodide solution (5→10), stopper tightly, shake vigorously to dissolve completely, titrate with sodium thiosulfate (0.1 mol/L) VS towards the end of titration, add starch IS, continue to titrate until the blue colour disappears. Each ml of iodine (0.1 mol/L) VS is equivalent to 23.61 mg of Hg_2Cl_2.
It contains not less than 99.0 per cent of mercurous chloride (Hg_2Cl_2).

Action External use: to kill parasites, counteract toxicity, and promote the healing of ulcers. Internal use: to remove *phlegm* and cause drastic purgation.

Indications For external use: scabies, ringworm, ecthyma, syphilis, ulcers, eczema.
For oral aministration: edema and abdominal distension with oliguria and constipation.

Usage and dosage For external use, appropriate quantity is ground into powder and applied topically. For oral administration, 0.1-0.2 g, 1-2 times a day, mostly used in pills or capsules. Gargle after taking the drug.

Precaution Because of its toxicity, overdosage should be avoided, used with caution for oral administration, and contraindicated in pregnancy.

Storage Preserve in a well closed container, protected from light and stored in a dry place.

Calyx Kaki
(柿蒂，Shidi)

Persimmon Calyx

Persimmon Calyx is the dried persistent calyx of *Diospyros kaki* Thunb. (Fam. Ebenaceae). The drug is collected in winter when the fruit is ripe, washed clean, and dried in the sun.

Description Oblate, 1.5-2.5 cm in diameter. Relatively thick in the middle, slightly prominent, with a rounded scar of fruit fallen off and somewhat thin at the edge, 4-lobed, the lobes frequently reflexed, easily broken. A fruit stalk or a pitted scar of fruit stalk remained at the base. Outer surface yellowish-brown or reddish-brown, inner surface yellowish-brown, densely covered with fine pubescences. Texture hard and fragile. Odour, slight; taste, astringent.

Identification To 2 g of the powder add 10 ml of 70% ethanol, warmly macerate for 2 hours, filter, evaporate the filtrate to dryness, dissolve the residue in 1 ml of methanol and use as the test solution. Dissolve Gallic acid CRS in methanol to produce a solution containing 0.5 mg per ml as the reference solution. Carry out the method for thin layer chromatography (Appendix Ⅵ B) using silica gel G containing sodium carboxymethylcellulose as the coating substance and a mixture of toluene (saturated with water)-methyl formate-formic acid (5∶4∶1) as the mobile phase. Apply separately 5 μl of test solution and 2 μl of the reference solution to the plate. After developing and removal of the plate, dry it in air, spray with 1% solution of ferric chloride in ethanol. A spot in the chromatogram obtained with the test solution corresponds in colour and position to spot in the chromatogram obtained with the reference solution.

Processing Eliminate foreign matter, wash clean, remove the stalk, dry, or break to pieces.

Action To check the upward flow of the stomach *qi*.

Indications Hiccup.

Usage and dosage 4.5-9 g.

Storage Preserve in a ventilated and dry place, protected from moth.

Calyx seu Fructus Physalis
(锦灯笼，Jindenglong)

Franchet Groundcherry Fruit

Franchet Groundcherry Fruit is the dried persistent calyx or the persistent calyx with fruit of *Physalis alkekengi* L. var. *franchetii* (Mast.) Makino (Fam. Solanaceae). The drug is collected in autumn when the fruit is ripe and the persistent calyx turns to red or orange-red, and dried.

Description Somewhat lantern-shaped, mostly flattened, 3-4.5 cm long, 2.5-4 cm wide. Externally orange-red or orange-yellow, possessing 5 distinct longitudinal ribs, with fine reticulate veins between them. Apex acuminate, slightly 5-lobed, base somewhat truncate, centre dented, with a fruit stalk. Texture light and pliable, hollowed, some containing brownish-red or orange-red fruit. Fruit

spherical, mostly flattened, 1-1.5 cm in diameter, pericarp shrunken, containing numerous seeds. Odour, slight; taste, calyx bitter and fruit sweet, slightly sour.

Identification To 1 g of the powder add 10 ml of petroleum ether (30-60℃), macerate for 15 minutes, discard the petroleum ether, evaporate the residue on a water bath to dryness. Add 10 ml of chloroform to the residue, macerate for 30 min with frequently shaking, filter and concentrate the filtrate to 1 ml as the test solution. Prepare a solution of 1 g reference drug of Calyx seu Fructus Physalis in the same manner as the reference drug solution. Carry out the method for thin layer chromatography (Appendix Ⅵ B), using silica gel G as the coating substance and a mixture of petroleum ether (boiling range 60-90℃) -acetone (20 : 1) as the mobile phase. Apply separately 10-15 μl of each of the two solutions to the plate. After developing and removal of the plate, dry in air. The orange-yellow spot in the chromatogram obtained with the test solution corresponds in position and colour to the spot in the chromatogram obtained with reference solution.

Action To remove *toxic-heat*, soothe the sore throat, resolve *phlegm*, and relieve dysuria.

Indications Sore throat and hoarseness of voice; cough with yellow sticky sputum; dysuria; external use for pemphigus and eczema.

Usage and dosage 5-9 g; for external use, appropriate quantity is pounded into paste and applied topically.

Storage Preserve in a ventilated and dry place, protected from moth.

Carapax et Plastrum Testudinis (龟甲, Guijia)

Tortoise Carapace and Plastron

Tortoise Carapace and Plastron is the carapace and plastron of *Chinemys reevesii* (Gray) (Fam. Emydidae). The animal is captured all the year round, but usually in autumn or winter, killed or scalded to death by boiling water. The drug is collected, removed from the remaining muscles, and dried in the sun.

Description The carapace and plastron being connected by a bony bridge, the former slightly longer than and also separated from the latter. The carapace long elliptic, arciform, 7.5-22 cm long, 6-18 cm wide, the outer surface brown or blackish-brown, 3 vertebral ridges, 1 nuchal scute, anterior part narrow than posterior part; 5 vertebral scutes, for the 1st vertebral scute, the length greater than or nearly equal to the width; for the 2nd to 4th ones, the length smaller than the width; 4 symmetrical costal scutes at both sides, 11 marginal scutes at each side; 2 pygal scutes. The plastron plate-like, subrectangular elliptic, 6.4-21 cm long, 5.5-17 cm wide, the outer surface pale yellowish-brown to brownish-black, with 12 horny scutes, each usually with purplish-brown radiated viens, the sutures between abdominal, pectoral and femoral scutes in the same long, those between gular and anal scutes shorter, that between humeral scutes shortest; the inner surface yellowish-white to greyish-white, some with slight bloodstain or remaining muscles, 9 pieces of bony plates visible after cleaning and the serrated edges inlaid each other. Anterior end obtuse or truncate, posterior end with a triangular notch; wing like bony bridge curved upward obliquely at both lateral sides. Texture hard. Odour, slightly stinking; taste, slightly salty.

Processing *Carapax et Plastrum Testudinis* Steam in a pan for 45 minutes, take out and put in hot water, remove skin and meat by a scrub-brush immediately, then wash clean and dry in the sun.

Carapax et Plastrum Testudinis (*processed with vinegar*) Stir-bake the clean Carapax et Plastrum Testudinis with sand as described under the method for scalding (Appendix Ⅱ D) until the colour of the surface turns to yellowish. Take out, temper with vinegar, and dry, Break to pieces before use.
Use 20 kg of vinegar per 100 kg of Carapax et Plastrum Testudinis.

Action To nourish *yin* and subdue *yang*, replenish the kidney and strengthen the bones, and enrich blood and benefit the heart.

Indications Consumptive fever and night sweating due to deficiency of *yin*; vertigo, tremors due to *internal-wind*, weakness of legs; amnesia.

Usage and dosage 9-24 g, decocted first.

Storage Preserve in a dry place, protected from moth.

Preparation Tortoise Shell Glue.

Carapax Trionycis (鳖甲, Biejia)

Turtle Carapace

Turtle Carapace is the carapace of *Trionyx sinensis* Wiegmann (Fam. Trionychidae). The animal is collected all the year round, but mostly in autumn or winter, killed, scalded by boiling water until the hard skin of the carapace can be peeled off, taken out. The drug is collected, removed from the remaining muscles, and dried in the sun.

Description Elliptic or oval, dorsal surface convex, 10-15 cm long, 9-14 cm wide. The outer surface blackish-borwn or dark green, somewhat lustrous, with fine reticular wrinkles and greyish-yellow or greyish-white spots, longitudinal ridge in the middle, eight transverse concave strips arranged symmetrically on each side of the ridge. Serrated sutures observable when the outer skin peeled off. Inner surface whitish, projecting vertebrae in the middle, the cervical vertebrae curved inward, 8 ribs arranged on each side of the vertebrae, stretched out of the margin. Texture hard. Odour, slightly stinking; taste, weak.

Extractives Carry out the method for determination of ethanol-soluble extractives (Appendix Ⅹ A, the hot extraction method), using dilute ethanol as the solvent, not less than 5.0 per cent.

Processing *Carapax Trionycis* Steam in a pan for 45 minutes. Take out and put in hot water, remove skin and muscle by a hard-brush immediately, wash clean and dry in the sun.

Carapax Trionycis (*processed with vinegar*) Scald clean Carapax Trionycis with sand as described under the method for scalding (Appendix Ⅱ D), until the surface becomes yellowish. Take out, temper with vinegar, and dry. Break to pieces before use.
Using 20 kg of vinegar per 100 kg of Carapax Trionycis.

Action To nourish *yin* and subdue exberant *yang*, reduce

masses and nodulations, and relieve consumptive fever.

Indications Fever due to deficiency of *yin*; consumptive fever; tremor due to *internal-wind*; amenorrhea, mass in the abdomen; chronic malaria with splenomegaly.

Usage and dosage 9-24 g, pounded to pieces, decocted first.

Storage Preserve in a dry place, protected from moth.

Catechu
(儿茶, Ercha)

Cutch, Black Catechu

Cutch or Black Catechu is the dried concentrated decoction prepared from the peeled branch and stem of *Acacia catechu* (L. f.) Willd. (Fam. Leguminosae). The branch and stem are collected in winter, peeled, cut into big pieces, decocted with water. The decoction is concentrated, and dried.

Description Square or irregular masses, varying in size. Externally brown or blackish-brown, smooth and somewhat lustrous. Texture hard, easily broken; fracture irregular, lustrous, porous, sticky when moistened. Odour, slight; taste, astringent, bitter and then sweet.

Identification (1) Powder: Brown. Needle crystals and yellowish-brown masses visible.
(2) Macerate a matchstick in water solution of the drug, allow to be dyed slightly. After drying, macerate in hydrochloric acid and remove immediately, bake beside a flame; a dark red colour is produced on the matchstick.
(3) To 0.5 g of the powder add 30 ml ether, ultrasonicate for 10 minutes, filter and evaporate the filtrates to dryness. Dissolve the residue with 5 ml of methanol as the test solution. Dissolve catechin CRS and epicatechin CRS in mathanol to produce a mixed solution containing 0.2 mg per ml respectively as the reference solution, carry out the method for thin layer chromatography (Appendix Ⅵ B), using cellulose as the coating substance and a mixture of *n*-butanol-acetic acid-water (3 : 2 : 1) as the mobile phase. Apply separately to the plate 5 μl of the test solution and 2 μl of the reference solution. After developing and removal of the plate, dry in air, then spray with a 10% solution of ethanol in sulfuric acid and heat until obtaining clear spots. The same red spots in the chromatogram obtained with the test solution corresponds in position and colour to the spots obtained with the reference solution.

Water Carry out the method as described under determination of water (Appendix Ⅸ H, method 2), not more than 17.0 per cent.

Assay Carry out the method for high performance liquid chromatography (Appendix Ⅵ D).

Chromatographic system and system suitability Use a column packed with octadecylsilane bonded silica gel as the stationary phase and the mixture of 0.04 mol/L citric acid-*N*, *N*-dimethylformamide-tetrahydrofuran (45 : 8 : 2) as the mobile phase. Detection wavelength is 280 nm and temperature of the column is 35℃. The number of the theoretical plate of the column is not less than 3000, calculated with reference to the peak of catechin.

Reference solution Dissolve catechin CRS and epicatechin CRS, accurately weighed, in a mixture of methanol-water (1 : 1) to produce a mixed solution containing 0.15 mg of catechin and 0.1 mg of epicatechin per ml, mix well.

Test solution Dissolve 0.02 g of the powder, accurately weighed, in 40 ml mixture of methanol-water (1 : 1) in a 50 ml volumetric flask and ultrasonicate 20 minutes, dilute with mixture of methanol-water (1 : 1) to volume, filter through 0.45 μm, mix well.

Procedure Inject accurately 5 μl of the reference solution and of the test solution respectively into the column, and calculate the contents.
It contains not less than 21.0 per cent of the total contents, calculated as catechin ($C_{15}H_{14}O_6$) and epicatechin ($C_{15}H_{14}O_6$).

Processing Eliminate foreign matter. Break into pieces before use.

Action To arrest exudation, promote the growth of new tissue, and cure wounds.

Indications Festering wound difficult to heal up; skin diseases with watery discharge; ulcers in the mouth; tranmatic injury with pain and bleeding.

Usage and dosage 1-3 g, decocted with wrapping, used in pills or powder; appropriate quantity for external use.

Storage Preserve in a dry place, protected from moisture.

Caulis Akebiae
(木通, Mutong)

Akebia Stem

Akebia Stem is the dried lianoid stem of *Akebia quinata* (Thunb.) Decne., *Akebia trifoliata* (Thunb.) Koidz. or *Akebia trifoliata* (Thunb.) Koidz. var. *australis* (Diels) Rehd. (Fam. Lardizabalaceae). The drug is collected in autumn, removed from fine branch, and dried in the shade.

Description Cylindrical, often slightly twisted, 30-70 cm long, 0.5-2 cm in diameter. Externally greyish-brown, rough, with irregular longitudinal cracks and furrows. Lenticels distinct. Nodes sometimes swollen, with scars of lateral branches. Texture light, compact, uneasily broken, fracture uneven, bark relatively broad, yellowish-brown, granular dots visible, pale yellow, wood yellowish-white, rays arranged radially, pith small, occasionally hollowed, yellowish-white or yellowish-brown. Odour, slight; taste, slightly bitter and astringent.

Identification Dissolve oleanolic acid CRS and hederagenin CRS in methanol to produce two solutions containing 1 mg of each per ml. Carry out the method for thin layer chromatography (Appendix Ⅵ B), using silica gel G as the coating substance and a mixture of *n*-hexane, ethyl acetate and glacial acetic acid (6 : 4 : 0.25) as the mobile phase. Apply separately to the plate 2 μl of each of the reference solutions and 10 μl of the test solution obtained under the Assay. After developing and removal of the plate, dry in air. Spray with 10% sulfuric acid in ethanol and heat at 105℃ to the spots clear. The spots in the chromatogram obtained with the test solution correspond in position and colour to the spots in the chromatogram obtained with the reference solutions.

Water Not more than 10.0 per cent (Appendix Ⅸ H, method 1).

Total ash Not more than 6.5 per cent (Appendix Ⅸ K).

Assay Carry out the method for high performance liquid chromatography (Appendix Ⅵ D).

Chromatographic system and system suitability Use

octadecylsilane bonded silica gel as the stationary phase and a mixture of methanol, water, glacial acetic acid and triethylamine (87 : 13 : 0.04 : 0.02) as the mobile phase. As detector a spectrophotometer set at 210 nm. The number of theoretical plates of the column is not less than 2000, calculated with reference to the peak of oleanolic acid.

Reference solution Dissolve a quantity of oleanolic acid CRS and hederagenin CRS, accurately weighed, in methanol to produce a mixture containing 1 mg of each per ml.

Test solution Weigh accurately 2 g of the coarse powder (through No. 4 sieve), add 50 ml of methanol, ultrasonicate (power 250 W, frequency 50 kHz) for 30 minutes, filter, wash the residue with an appropriate quantity of methanol, combine the filtrate and washing, evaporate to dryness, dissolve the residue in 10 ml of water, extract with three 20-ml quantities of *n*-butanol saturated with water, combine the extracts and evaporate to dryness, to the residue add 20 ml of methanol and 2 ml of hydrochloric acid, heat under reflux for 4 hours, add 10 ml of water, extract with two 20-ml quantities of chloroform with frequent shaking, combine the chloroform extracts and evaporate to dryness, dissolve the residue in methanol, transfer to a 10 ml volumetric flask and dilute to volume, mix well.

Procedure Inject accurately 20 μl of each of the reference solution and the test solution, respectively, into the column, and calculate the content.

It contains not less than 0.15 per cent of the total amount of oleanolic acid ($C_{30}H_{48}O_3$) and hederagenin ($C_{30}H_{48}O_4$), calculated with reference to the dried drug.

Processing Eliminate foreign matter, wash clean, soften thoroughly, cut into slices, and dry.

Action To clear *heart-fire*, induce urination, stimulate menstrual flow and promote lactation.

Indications Feverish sensation in the chest, laryngalgia, pharyngalgia, deep-coloured urine, five types of stranguria, edema, general contraction pain, amenorrhea and hypogalactia.

Usage and dosage 3-6 g.

Storage Preserve in a ventilated and dry place.

Caulis Bambusae in Taenia (竹茹, Zhuru)

Bamboo Shavings

Bamboo Shavings is the dried middle shavings of stem of *Bambusa tuldoides* Munro, *Sinocalamus beecheyanus* (Munro) McClure var. *pubescens* P. F. Li or *Phyllostachys nigra* (Lodd.) Munro var. *henonis* (Mitf.) Stapf ex Rendle (Fam. Gramineae). The drug is collected all the year round. After peeling, the greenish middle layer of fresh stem is cut into sliver or shaving, bundled, and dried in the shade. The former is called "Sanzhuru" (Scattered Bamboo Shavings) and the latter is called "Qizhuru"(Uniform Bamboo Shavings).

Description Occurring in masses formed by numerous rolled irregular slivers, or in long slat-shaped shavings, varying in width and thickness, greenish or yellowish-green. Texture light, loose, flexible and elastic. Odour, slight; taste, weak.

Extractives Carry out the method for determination of water-soluble extractives (Appendix X A, the hot extraction method), not less than 4.0 per cent.

Processing *Caulis Bambusae in Taenia* Eliminate foreign matter, cut into sections or crumple up into small masses.

Caulis Bambusae in Taenia (processed with ginger) Stir-bake the clean Caulis Bambusae in Taenia as described under the method for stir-baking with ginger juice (Appendix II D) until it becomes yellow.

Action To remove *heat*, resolve *phlegm*, relieve restlessness and arrest vomiting.

Indications Cough due to *heat* and *phlegm*; restlessness, vomiting, palpitation and insomnia caused by excessive *fire* in the gallbaldder; stroke with impairment of consciousness; stiff tongue and vomiting due to *heat* in the stomach; hyperemesis gravidarum, threatened abortion.

Usage and dosage 4.5-9 g.

Storage Preserve in a dry place, protected from mould and moth.

Caulis Clematidis Armandii (川木通, Chuanmutong)

Armand Clematis Stem

Armand Clematis Stem is the dried lianoid stem of *Clematis armandii* Franch. or *Clematis montana* Buch.-Ham. (Fam. Ranunculaceae). The drug is collected in spring and autumn, removed from the coarse bark, and dried in the sun; or cut into thin slice when fresh and dried in the sun.

Description Long cylindrical, slightly twisted, 50-100 cm long, 2-3.5 cm in diameter, Externally yellowish-brown, with longitudinal furrows and ridges. Nodes usually swollen, with leaf scars and branch scars. The remained bark easily torn. Texture hard, uneasily broken, the slices 2-4 mm thick, uneven on margin, the remained bark yellowish-brown, wood yellowish-brown or pale yellow, with yellowish-white radial striations and cracks, vessel pores scattered densely. Pith relatively small, whitish or yellowish-brown, occasionally hollowed. Odour, slight; taste, weak.

Identification To 25 g of the coarse powder add 250 ml of water, decoct for 30 minutes, filter, concentrate the filtrate to about 50 ml, cool, extract with two quantities (50, 25 ml) of *n*-butanol saturated with water, combine the *n*-butanol solutions, wash with five 30-ml quantities of 2% sodium hydroxide solution, and wash with water to neutral degree. Evaporate the *n*-butanol solution to dryness, dissolve the residue in 25 ml of ethanol, add 2 ml of hydrochloric acid, heat under reflux for 1 hour, evaporate to dryness. To the residue add 10 ml of water, stir thoroughly, extract with two 20-ml quantities of ethyl acetate saturated with water, combine the ethyl acetate solutions and evaporate to dryness, dissolve the residue in 2 ml of methanol as the test solution. Dissolve oleanolic acid CRS in methanol to produce a solution containing 1 mg per ml as the reference solution. Carry out the method for thin layer chromatography (Appendix VI B), using silica gel G as the coating substance and a mixture of cyclohexane and acetone (4 : 1) as the mobile phase. Apply separately to the plate 5 μl of each of the above two solutions. After developing and removal of the plate, dry in air. Spray with a 10% solution of sulfuric acid in ethanol, heat at 105℃ to the spots clear. A bluish brown spot in the chromatogram

obtained with the test solution corresponds in position and colour to the spot in the chromatogram obtained with the reference solution. Examine under ultraviolet light at 365 nm. A fluorescent spot in the chromatogram obtained with the test solution corresponds in position and colour to the spot in the chromatogram obtained with the reference solution.

Processing For unsliced, soak briefly, soften thoroughly, cut into thin slices, and dry in the sun.

Action To remove *heat* and induce urination, stimulate menstrual discharge, and promote lactation.

Indications Edema, stranguria; arthralgia; ame-norrhea; lack of lactation.

Usage and dosage 3-6 g.

Storage Preserve in a ventilated and dry place, protected from moisture.

Caulis Dendrobii (石斛, Shihu)

Dendrobium

Dendrobium is the fresh or dried stem of *Dendrobium nobile* Lindl., *Dendrobium candidum* Wall. ex Lindl. or *Dendrobium fimbriatum* Hook. var. *oculatum* Hook. and similar species. (Fam. Orchidaceae). The drug is collected in all the year round. For the fresh stem, removed from root and soil, and for the dried stem, removed from foreign matter, treated with boiling water for a moment or baked gently to soften, then rubbed while baking or sun drying to remove the leaf sheath, and dried. Some fibrous roots of *Dendrobium candidum* are trimmed off, stir-baked while twisting to a spiral or spring form, then baked to dryness, known as Tiepifengdou (Erhuanshihu, earring-like Dendrobium).

Description *Fresh Dendrobium* Cylindrical or flattened-cylindrical, about 30 cm long, 0.4-1.2 cm in diameter. Externally yellowish-green, smooth or striated longitudinally, with distinct nodes, deeply coloured, bearing membranous leaf sheaths. Fleshy, succulent, easily broken. Odour slight; taste, slightly bitter, then sweet and viscous on chewing.

Stem of Dendrobium nobile Flattened-cylindrical, 20-40 cm long, 4-6 mm in diameter, internodes 2.5-3 cm long. Externally golden or greenish-yellow, deeply furrowed longitudinally. Texture hard and fragile, fracture relatively even. Taste, bitter.

Tiepifengdou Spiral or spring-like, usually with 2-4 spires, 3.5-8 cm long when stem pulled straight, 2-3 mm in diameter. Externally yellowish-green, finely wrinkled longitudinally, at one end some short fibrous roots remained at the base of stem. Texture compact, easily broken, fracture even. Viscous on chewing.

Stem of Dendrobium fimbriatum var. *oculatum* Long cylindrical, 40-120 cm long, 5-8 mm in diameter, internodes 3-4.5 cm long. Externally yellow to dark yellow, deeply grooved longitudinally. Texture lax, fracture fibrous. Taste, slightly bitter.

Identification Transverse section of stem:

Stem of Dendrobium nobile Epidermal cells of 1 layer, flattened, covered with bright yellow cuticle. Parenchyma cells varying distinctly in size, with pitted walls, scattered with numerous collateral vascular bundles, arranged in 7-8 whorls. Fibre bundles at the outer side of vascular bundles crescent or semicircular, parenchymatous cells at the outer part containing subrounded silica bodies, xylem with 1-3 relatively large vessels. Most of cells containing needle crystals of calcium oxalate accompanied by vascular bundles.

Tiepifengdou Outer walls and lateral walls of epidermal cells slightly thickened and faintly lignified. Vascular bundles somewhat arranged in 4-5 whorls, small parenchymatous cells at the outer part containing silica bodies. Most of cells containing needle crystals of calcium oxalate occurring near the epidermis.

Stem of Dendrobium fimbriatum var. *oculatum* Epidermal cells flattened-rounded, outer walls and lateral walls thickened, lignified and striated. Parenchymatous cells similar in size, with pitted walls. Vascular bundles somewhat arranged in 3-4 whorls.

Processing For the dried stem, remove remains of roots, wash clean, cut into sections and dry. For the fresh stem, wash clean, cut into sections.

Action To benefit the stomach, promote the production of body fluid, nourish *yin*, and remove *heat*.

Indications Thirst due to impairment of *yin* or deficiency of body fluid; loss of appetite with nausea; fever in deficiency condition after a severe disease; impaired vision.

Usage and dosage 6-12 g; or 15-30 g of the fresh stem, decocted first in a compound prescription and longer decocted when it is prescribed alone.

Storage Preserve in a ventilated and dry place, protected from moisture; keep the fresh stem in a cool and moist place, protected from freezing.

Caulis Erycibes (丁公藤, Dinggongteng)

Obtuseleaf Erycibe Stem

Obtuseleaf Erycibe Stem is the dried lianoid stem of *Erycibe obtusfolia* Benth. or *Erycibe schmidtii* Craib (Fam. Convolvulaceae). The drug is collected all the year round, cut into section or piece, and dried in the sun.

Description In oblique sections or pieces, 1-10 cm in diameter. Externally greyish-yellow, greyish-brown or pale brown, slightly rough, with shallow furrows and irregular longitudinal or turtle-like fissures. Lenticles spot-like or protuberant, yellowish-white. Older cork exfoliated. Texture hard, with relatively rich fibres, uneasily broken. Cut surface elliptical, yellowish-brown or pale yellowish-brown, abnormal vascular bundles flowery or piece-like, vessels of xylem pitted. Odour, slight; taste, weak.

Identification To 3 g of the powder add 40 ml of ethanol, allow to macerate overnight, heat under reflux for 6 hours, filter. To the filtrate, add 6 ml of hydrochloric acid (6 mol/L), heat under reflux for 3 hours, evaporate to dryness on a water bath, dissolve the residue in 10 ml of ethanol as the test solution. Dissolve scopoletin CRS in ethanol to produce a solution containing 0.25 mg per ml as the reference solution. Carry out the method for thin layer chromatography (Appendix Ⅵ B) using silica gel G mixed with

sodium carboxymethylcellulose as the coating substance and a mixture of cyclohexane, chloroform, ethyl acetate and formic acid (6 : 10 : 7 : 1.2) as the mobile phase. Apply separately to the plate 3 μl of each of the above two solutions. After developing and removal of the plate, dry in air, examine under ultraviolet light at 365 nm. A bright blue fluorescent spot in the chromatogram obtained with the test solution corresponds in position and colour to the spot in the chromatogram obtained with the reference solution.

Water Not more than 12.0 per cent (Appendix Ⅸ H, method 1).

Total ash Not more than 10.0 per cent (Appendix Ⅸ K).

Extractives Carry out the method for determination of ethanol-soluble extractives (Appendix Ⅹ A, the hot extraction method), using ethanol as the solvent, not less than 3.0 per cent.

Assay Carry out the method for high performance liquid chromatography (Appendix Ⅵ D).

Chromatographic system and system suitability Use octadecylsilane bonded silica gel as the stationary phase and a mixture of methanol, water and glacial acetic acid (32 : 68 : 0.16) as the mobile phase. As detector a spectrophotometer set at 298 nm. The number of theoretical plates of the column is not less than 2000, calculated with reference to the peak of scopoletin.

Reference solution Dissolve a quantity of scopoletin CRS, accurately weighed, in methanol to produce a solution containing 40 μg per ml.

Test solution Weigh accurately 1 g of the powder (through No. 4 sieve) to a stopper conical flask. Add accurately 50 ml of 70% ethanol, weigh, heat on a water bath for 6 hours, allow to cool, weigh again, replenish the loss of the weight with 70% ethanol, mix well and filter. Measure accurately 25 ml of the successive filtrate to a flask, concentrate to about 1 ml, add 10 ml of 3 mol/L hydro-chloric acid, heat on a water bath for 2 hours, cool immediately. Transfer to a separating funnel, wash the flask several times with 10 ml of water, combine the washings to the separating funnel, add 2 g of sodium chloride, extract with five 15-ml quantities of chloroform, combine the chloroform extracts, add 2 g of anhydrous sodium sulfate, stir well and filter, wash the separating funnel with a small quantity of chloroform, filter, combine the filtrates and evaporate to almost dryness below 70℃, immediately dissolve the residue in methanol, transfer to a 10 ml volumetric flask, dilute to volume and mix well.

Procedure Inject accurately 10 μl of each of the reference solution and the test solution, respectively, into the column, and calculate the content.

It contains not less than 0.050 per cent of scopoletin ($C_{10}H_8O_4$), calculated with reference to the dried drug.

Processing Eliminate foreign matter, wash clean, soften thoroughly, cut into slices, and dry in the sun.

Action To dispel *wind* and deprive *dampness*, reduce swelling, relieve pain.

Indications Rheumatic arthralgia, hemiplegia, traumatic injury marked by pain and swelling.

Usage and dosage 3-6 g, made into tincture for oral administration or external application.

Precaution Induce perspiration strongly, used with caution in poor health, contraindicated in pregnancy.

Storage Preserve in a dry place.

Caulis Fibraufeae (黄藤, Huangteng)

Common Fibraurea Stem

Common Fibraurea Stem is the dried lianoid stem of *Fibraurea recisa* Pierre. (Fam. Menispermaceae). The drug is collected in autumn and winter, cut into section, and dried in the sun.

Description Long cylindrical, slightly twisted, 0.6-3 cm in diameter. Externally greyish-brown to yellowish-brown, rough, with longitudinal furrows and transverse cracks, outer bark of the old stem easily fallen off. Texture hard, uneasily broken, dusting on breaking, fracture uneven, yellow, fibrous, showing radially arranged striations alternated with brownish-yellow and yellowish-brown colours, pores of vessels fine, xylem sometimes with cracks. Centre yellowish-brown or hollowed. Odour, slight; taste, bitter.

Identification (1) Transverse section: Cork of numerous layers of cells containing brown contents, sometimes the walls lignified and thickened as stone cells. Stone cell groups occurring in cortex of the old stem. Vascular bundles collateral. fibre groups occurring in the outside of phloem. Fascicular cambium obvious. Vessels in xylem large, up to about 30 μm in diameter, wood fibres thick-walled. Rays broad, with stone cell groups. Pith mostly broken, fibres visible. Prisms of calcium oxalate existing in the stone cells or in the neighboring cells of stone cell and fibre groups. Parenchymatous cells containing starch granules.

(2) To 0.5 g of the powder add 10 ml of ethanol, ultrasonicate for 10 minutes, filter, use the filtrate as the test solution. Dissolve palmatine hydrochloride CRS in methanol to produce a solution containing 0.1 mg per ml as the reference solution. Carry out the method for thin layer chromatography (Appendix Ⅵ B), using silica gel G as the coating substance and a mixture of toluene, ethyl acetate, isopropanol, methanol and concentrated ammonia solution (6 : 3 : 1.5 : 1.5 : 0.5) as the mobile phase. Apply separately to the plate 2 μl of each of the above two solutions. After developing in a chamber saturated with ammonia vapour and removal of the plate, dry in air, and examine under ultraviolet light at 365 nm. A fluorescent spot in the chromatogram obtained with the test solution corresponds in position and colour to the spot in the chromatogram obtained with the reference solution.

Water Not more than 13.0 per cent (Appendix Ⅸ H, method 1).

Total ash Not more than 8.0 per cent (Appendix Ⅸ K).

Acid-insoluble ash Not more than 1.0 per cent (Appendix Ⅸ K).

Extractives Carry out the method for determination of ethanol-soluble extractives (Appendix Ⅹ A, the hot extraction method), using a solution of 1% hydrochloric acid in methanol as the solvent, not less than 17.0 per cent.

Assay Carry out the method for high performance liquid chromatography (Appendix Ⅵ D).

Chromatographic system and system suitability Use octadecylsilane bonded silica gel as the stationary phase and a mixture of acetonitrile and 0.4% phosphoric acid solution (32 : 68) as the mobile phase, and maintain the column temperature at 40℃. As detector a spectrophotometer set at 345 nm. The number of theoretical plates of the column is not less than

5000, calculated with reference to the peak of palmatine hydrochloride.

Reference solution Dissolve a quantity of palmatine hydrochloride CRS, accurately weighed, in a solution of 1% hydrochloric acid in methanol to produce a solution containing 30 μg per ml.

Test solution Weigh accurately 0.6 g of the powder (through No. 3 sieve) to a stopper conical flask, add accurately 100 ml of a solution of 1% hydrochloric acid in methanol, weigh, stand overnight, heat on a water bath for 1 hour, allow to cool, weigh again, replenish the loss of the weight with a solution of 1% hydrochloric acid in methanol, mix well, filter. Accurately measure 2 ml of the successive filtrate to a 10 ml volumetric flask, dilute with a solution of 1% hydrochloric acid in methanol to volume, mix well.

Procedure Inject accurately 5 μl of each of the reference solution and the test solution, respectively, into the column, and calculate the content.
It contains not less than 2.0 per cent of palmatine hydrochloride ($C_{21}H_{22}NO_4 \cdot HCl$), calculated with reference to the dried drug.

Action To clear *toxic-heat*, purge *fire* and relax bowels.

Indications Constipation or dysentery, sore throat, bloodshot eyes, carbuncles and sores due to abundant *toxic-heat* in the interior.

Usage and dosage 30-60 g, appropriate quantity for external use.

Storage Preserve in a ventilated and dry place, protected from mould.

Caulis Lonicerae Japonicae (忍冬藤, Rendongteng)

Honeysuckle Stem

Honeysuckle Stem is the dried stem and branch of *Lonicera japonica* Thunb. (Fam. Caprifoliaceae). The drug is collected in autumn and winter, and dried in the sun.

Description Long cylindrical, frequently branched, usually twisted into a bundle, 1.5-6 mm in diameter. Externally brownish-red to dark brown, some greyish-green, glabrous or pubescent; outer bark easily fallen off. Branches much-nodose, internodes 6-9 cm long, showing remains of leaves and leaf scars. Texture fragile, easily broken, fracture yellowish-white, hollow. Odour, slight; taste of older branches slightly bitter, and the younger ones weak.

Water Not more than 12.0 per cent (Appendix Ⅸ H, method 1).

Total ash Not more than 4.0 per cent (Appendix Ⅸ K).

Acid-insoluble ash Not more than 1.0 per cent (Appendix Ⅸ K).

Assay Carry out the method for high performance liquid chromatography (Appendix Ⅵ D).

Chromatographic system and system suitability Use octadecylsilane bonded silica gel as the stationary phase and a mixture of acetonitrile and 0.4% phosphoric acid solution (10 : 90) as the mobile phase. As detector a spectrophotometer set at 327 nm. The number of theoretical plates of the column is not less than 1000, calculated with reference to the peak of chlorogenic acid.

Reference solution Dissolve a quantity of chlorogenic acid CRS, accurately weighed, in 50% methanol to produce a solution containing 40 μg per ml.

Test solution Weigh accurately 1 g of the powder (through No. 3 sieve) to a stopper conical flask. Add accurately 25 ml of 50% methanol, weigh, ultrasonicate (power 250 W, frequency 30 kHz) for 30 minutes, allow to cool, weigh again, replenish the loss of the weight with 50% methanol, mix well and filter.

Procedure Inject accurately 10 μl of the reference solution and 5-10 μl of the test solution, respectively, into the column, and calculate the content.
It contains not less than 0.10 per cent of chlorogenic acid ($C_{16}H_{18}O_9$), calculated with reference to the dried drug.

Processing Eliminate foreign matter, wash clean, soften thoroughly, cut into sections, and dry.

Action To remove *toxic-heat*, and dispel *wind* from the channels and collaterals.

Indications Epidemic febrile diseases, acute dysentery, carbuncles, sores, acute arthritis with redness, swelling and pain of the joint.

Usage and dosage 9-30 g.

Storage Preserve in a dry place.

Caulis Mahoniae (功劳木, Gonglaomu)

Chinese Mahonia Stem

Chinese Mahonia Stem is the dried stem of *Mahonia bealei* (Fort.) Carr. or *Mahonia fortunei* (Lindl.) Fedde (Fam. Berberidaceae). The drug is collected all the year round, cut into piece and dried.

Description In irregular pieces, varying in size. Externally greyish-yellow to dark brown, with distinct longitudinal furrows and fine transverse cracks, sometimes outer bark relatively smooth, lustrous or showing remains of petioles. In cut surface, bark narrow, dark brown, wood yellow, showing several concentrical rings and radial striations arranged densely. Pith somewhat dark in colour. Texture hard. Odour, slight; taste, bitter.

Identification To 0.3 g of the powder add 5 ml of methanol, ultrasonicate for 15 minutes, filter and dilute the filtrate with methanol to 5 ml as the test solution. Dissolve berberine hydrochloride CRS, palmatine hydrochloride CRS and jatrorrhizine hydrochloride CRS in methanol to produce a mixture containing 0.5 mg of each per ml as the reference solution. Carry out the method for thin layer chromatography (Appendix Ⅵ B), using silica gel G as the coating substance and a mixture of benzene, ethyl acetate, methanol, isopropanol and concentrated ammonia solution (6 : 3 : 1.5 : 1.5 : 0.5) as the mobile phase. Apply separately to the plate 1 μl of each of the above two solutions. After developing in a chamber saturated with ammonia vapour and removal of the plate, dry in air, examine under ultraviolet light at 365 nm. Three yellow fluorescent spots in the chromatogram obtained with the test solution correspond in position and colour to the spots in the chromatogram obtained with the reference solution.

Water Not more than 9.0 per cent (Appendix Ⅸ H, method 1).

Total ash Not more than 2.0 per cent (Appendix Ⅸ K).

Extractives Carry out the method for determination of ethanol-soluble extractives (Appendix Ⅹ A, the hot extraction method), using ethanol as the solvent, not less than 3.0 per cent.

Assay Carry out the method for high performance liquid chromatography (Appendix Ⅵ D).

Chromatographic system and system suitability Use octadecylsilane bonded silica gel as the stationary phase and a mixture of acetonitrile and potassium dihydrogen phosphate buffer solution (monitor the pH value to 3.0 with phosphoric acid)(30 : 70) as the mobile phase. As detector a spectrophotometer set at 265 nm. The number of theoretical plates of the column is not less than 5000, calculated with reference to the peak of berberine hydrochloride.

Reference solution Dissolve a quantity of berberine hydrochloride CRS, accurately weighed, in a mixture of acetonitrile and water (3 : 7) to produce a solution containing 20 μg per ml.

Test solution Weigh accurately 0.25 g of the coarse powder, add accurately 50 ml of a mixture of hydrochloric acid and methanol (1 : 100), weigh, macerate at room temperature for 30 minutes, ultrasonicate (power 500 W, frequency 40 kHz) for 45 minutes, allow to cool, weigh again, replenish the loss of the weight with a mixture of hydrochloric acid and methanol (1 : 100), mix well and filter. Accurately measure 5 ml of the successive filtrate to a flask and evaporate to dryness, dissolve the residue in a mixture of acetonitrile and water (3 : 7), transfer to a 5 ml volumetric flask, dilute to volume, mix well and filter.

Procedure Inject accurately 10 μl of each of the reference solution and the test solution, respectively, into the column, and calculate the content.
It contains not less than 0.20 per cent of berberine hydrochloride ($C_{20}H_{17}NO_4 \cdot HCl$), calculated with reference to the dried drug.

Action To remove *damp-heat*, quench *fire*, and counteract *toxicity*.

Indications Acute dysentery, icteric hepatitis conjunctivitis, ulcers, boils, carbuncles; toothache due to *fire* in the stomach.

Usage and dosage 9-15 g; appropriate quantity for external use.

Storage Preserve in a dry place.

Caulis Perillae (紫苏梗, Zisugeng)

Perilla Stem

Perilla Stem is the dried stem of *Perilla frutescens* (L.) Britt. (Fam. Labiatae). The drug is collected after fruit is ripe in autumn, removed from foreign matter, and dried in the sun; or cut into slice when fresh, and dried in the sun.

Description Square, four angles obtuse, varying in length, 0.5-1.5 cm in diameter. Externally purplish-brown or dark purple, with longitudinal furrows and fine longitudinal striations, nodes slightly swollen, with opposite branch scars and leaf scars. Texture light and hard, fracture lobed. Slices 2-5 mm thick, usually rhomboidal, wood yellowish-white, medullary rays fine and dense, radiate, pith white, lax or falling off. Odour, slightly aromatic; taste, weak.

Processing Eliminate foreign matter, soak briefly, soften thoroughly, cut into thick slices and dry.

Action To regulate the flow of *qi* and the function of the stomach, alleviate pain, and prevent abortion.

Indications Feeling of stuffiness in the chest, epigastralgia, belching and vomiting; threatened abortion.

Usage and dosage 5-9 g.

Storage Preserve in a cool and dry place.

Caulis Piperis Kadsurae (海风藤, Haifengteng)

Kadsura Pepper Stem

Kadsura Pepper Stem is the dried stem of *Piper kadsura* (Choisy) Ohwi (Fam. Piperaceae). The drug is collected in summer and autumn, removed from root and leaf, and dried in the sun.

Description Flat-cylindrical, slightly curved, 15-60 cm long, 0.3-2 cm in diameter. Externally greyish-brown or brown, rough, with longitudinally ridged striations and distinct nodes. Internodes 3-12 cm long, nodes swollen, bearing adventitious roots. Texture light, fragile, easily broken, fracture uneven, bark narrow, wood broad, greyish-yellow, vessel pores numerous, rays greyish-white, arranged radially, usually cleft between bark and wood, pith in centre, greyish-brown. Odour, aromatic; taste, slightly bitter and pungent.

Identification To 1 g of the powder add 30 ml of methanol, ultrasonicate for 30 minutes, filter, evaporate the filtrate to dryness, dissolve the residue in 1 ml of ethanol as the test solution. Prepare a solution with 1 g of Caulis Piperis Kadsurae reference drug in the same manner as the reference drug solution. Carry out the method for thin layer chromatography (Appendix Ⅵ B), using silica gel G mixed with sodium carboxymethylcellulose as the coating substance and a mixture of chloroform, acetone and methanol (7 : 1 : 0.5) as the mobile phase. Apply separately to the plate 5 μl of each of the above two solutions. After developing and removal of the plate, dry in air, and examine under ultraviolet light at 365 nm. The main spots in the chromatogram obtained with the test solution correspond in position and colour to the spots in the chromatogram obtained with the reference drug solution.

Water Not more than 12.0 per cent (Appendix Ⅸ H, method 1).

Total ash Not more than 10.0 per cent (Appendix Ⅸ K).

Acid-insoluble ash Not more than 2.0 per cent (Appendix Ⅸ K).

Extractives Carry out the method for determination of ethanol-soluble extractives (Appendix Ⅹ A, the hot extraction method), using dilute ethanol TS as the solvent, not less than 10.0 per cent.

Processing Eliminate foreign matter, soak, soften thoroughly, cut into thick slices, and dry in the sun.

Action To relieve rheumatic condition.

Indications Rheumatic or rheumatoid arthritis with joint pain, muscular contracture and ankylosis.

Usage and dosage 6-12 g.

Storage Preserve in a ventilated and dry place.

Caulis Polygoni Multiflori (首乌藤, Shouwuteng)

Tuber Fleeceflower Stem

Tuber Fleeceflower Stem is the dried lianoid stem of *Polygonum multiflorum* Thunb. (Fam. Polygonaceae). The drug is collected in autumn and winter, removed from the remained leaf, bundled up, and dried.

Description Long cylindrical, slightly twisted, branched, varying in length, 4-7 mm in diameter. Externally purplish-red to purplish-brown, rough, with twisted longitudinal wrinkles. Nodes slightly swollen, with scars of lateral branches. The outer bark thin and easily stripped. Texture fragile, easily broken, in fracture, bark purplish-red, wood yellowish-white or pale brown, vessel pores distinct, pith lax and whitish. Odour, slight; taste, slightly bitter and astringent.

Identification (1) Transverse section: Epidermal cells sometimes remained. Cork consisting of 3-4 layers of cells, containing brown pigment. Cortex relatively narrow. Fibre bundles in pericycle arranged in a discontinuous ring. Walls of fibres markedly thickened and lignified; groups of stone cells occasionally existing among fibre bundles. Phloem relatively wide. Cambium in a ring. Vessels in xylem subrounded, up to 204 μm in diameter, singly scattered or several aggregated. Pith relatively small. Parenchymatous cells containing clusters of calcium oxalate.

(2) To 0.25 g of the powder add 50 ml of ethanol, heat under reflux on a water bath for 1 hour, filter, and concentrate the filtrate to 3 ml as the test solution. Prepare a solution with 0.25 g of Caulis Polygoni Multiflori reference drug in the same manner as the reference drug solution. Dissolve emodin CRS in ethanol to produce a solution containing 1 mg per ml as the reference solution. Carry out the method for thin layer chromatography (Appendix Ⅵ B), using silica gel H containing sodium carboxymethylcellulose as the coating substance and a mixture of benzene and ethanol (2 : 1) as the mobile phase. Apply in strips separately to the plate 2 μl of each of the above three solutions. After developing to 3.5 cm and removal of the plate, dry in air, and then using a mixture of benzene and ethanol (4 : 1) as the mobile phase, after developing to 7 cm in a chamber pre-saturated for 15 minutes and removal of the plate, dry in air, and examine under ultraviolet light at 365 nm. The fluorescent strips in the chromatogram obtained with the test solution correspond in position and colour to the strips in the chromatograms obtained with the reference drug and reference solutions.

Processing Eliminate foreign matter, wash clean, cut into sections, and dry in the sun.

Action To nourish blood, induce tranquilization, dispel *wind*, and remove obstruction of channels and collaterals.

Indications Insomnia, dream-disturbed sleep; general aching in blood deficiency; rheumatic arthralgia; external use for itching.

Usage and dosage 9-15 g; for external use, appropriate quantity is decocted for washing.

Storage Preserve in a dry place.

Caulis Sargentodoxae (大血藤, Daxueteng)

Sargentgloryvine Stem

Sargentgloryvine Stem is the dried lianoid stem of *Sargentodoxa cuneata* (Oliv.) Rehd. et Wils. (Fam. Lardizabalaceae). The drug is collected in autumn and winter, removed from lateral branch, cut into section, and dried.

Description Cylindrical, slightly curved, 30-60 cm long, 1-3 cm in diameter. Externally greyish-brown, rough, the outer layer often scaling off, the exposed surface dark reddish-brown, sometimes showing inflated nodes and slightly dented branch scars or leaf scars. Texture hard, in fracture, bark reddish-brown, some inlaid into the wood, wood yellowish-white, with numerous fine pores of vessels and rays arranged radially. Odour, slight; taste, slightly astringent.

Identification (1) Transverse section: Cork of several layers of cells containing brownish-red contents. Stone cells in cortex usually several in groups, some of them containing prisms of calcium oxalate. Vascular bundles collateral. Secretory cells in phloem arranged tangentially and alternated with sieve tubes; a few stone cell groups scattered. Fascicular cambium obvious. Vessels in xylem mostly single and scattered, subrounded, up to about 400 μm in diameter, surrounded by wood fibres. Rays broad, stone cells abundant in the outer part, some of them containing prisms of calcium oxalate. Stone cell groups in pith visible. Parenchymatous cells containing brown or brownish-red contents.

(2) To 5 g of the coarse powder add 50 ml of methanol, ultrasonicate for 30 minutes, filter, evaporate the filtrate to dryness, dissolve the residue in 10 ml of 2% sodium hydroxide solution, monitor the pH value to 2 with hydrochloric acid, extract with three 10-ml quantities of ether with frequent shaking, combine the ether solutions and expel the solvent, dissolve the residue in 2 ml of methanol as the test solution. Prepare a solution with 5 g of Caulis Sargentoxae reference drug in the same manner as the reference drug solution. Carry out the method for thin layer chromatography (Appendix Ⅵ B), using silica gel G as the coating substance and a mixture of chloroform, acetone and formic acid (8 : 1 : 0.8) as the mobile phase. Apply separately to the plate 2 μl of each of the above two solutions. After developing and removal of the plate, dry in air. Spray with 2% ferric chloride in ethanol. The spots in the chromatogram obtained with the test solution correspond in position and colour to the spots in the chromatogram obtained with the reference drug solution.

Water Not more than 12.0 per cent (Appendix Ⅸ H, method 1).

Total ash Not more than 4.0 per cent (Appendix Ⅸ K).

Extractives Carry out the method for determination of ethanol-soluble extractives (Appendix Ⅹ A, the hot extraction method), using ethanol as the solvent, not less than 5.0 per cent.

Processing Eliminate foreign matter, wash clean, soften thoroughly, cut into thick slices, and dry.

Action To remove *toxic-heat*, promote blood circulation, and relieve rheumatic condition.

Indications Acute appendicitis; amenorrhea, dysmenorrhea;

rheumatic arthralgia; traumatic swelling and pain.

Usage and dosage 9-15 g.

Storage Preserve in a ventilated and dry place.

Caulis Sinomenii
(青风藤, Qingfengteng)

Orientvine Stem

Orientvine Stem is the dried lianoid stem of *Sinomenium acutum* (Thunb.) Rehd. et Wils. or *Sinomenium acutum* (Thunb.) Rehd. et Wils. var. *cinereum* Rehd. et Wils. (Fam. Menispermaceae). The drug is collected in late autumn and early winter, tied up in bundle or cut into long section, and dried in the sun.

Description Long cylindrical, usually somewhat curved, 20-70 cm long or more, 0.5-2 cm in diameter. Externally greenish-brown to brown, some greyish-brown, with fine longitudinal striations and lenticels. Nodes slightly swollen and branched. Texture light, hard and fragile, easily broken, fracture uneven, greyish-yellow or pale greyish-brown, bark narrow, wood rays arranged radially, pith pale yellowish-white or yellowish-brown. Odour, slight; taste, bitter.

Identification (1) Transverse section: The outmost is epidermis, covered with thick cuticle, or cork. Cortex scattered with fibres and stone cells. Pericyclic fibre groups in crescent shape, the inner side of fibre groups usually possessing 2-5 layers of stone cells, tangentially elongated and linked with stone cell groups in rays to a ring. Vascular bundles collateral. Phloem rays gradually widened outwards, occurring conical or branched stone cells; phloem, cells mostly collapsed, sometimes scattered with 1-3 fibres. Xylem vessels singly scattered or serveral linked up tangentially. The walls of cells surrounding pith relatively thickened, distinctly pitted. Parenchymatous cells containing starch granules and needle crystals of calcium oxalate.

Powder: Yellowish-brown or greyish-brown. Epidermal cells yellow or yellowish-brown, subrounded or oblong in lateral view, 24-78 μm in diameter, covered with cuticle. Stone cells pale yellow or yellow, subsquare, fusiform, elliptical or irregular, walls relatively thickened, pit canals distinct. Cortex fibres pale yellow or yellow, 27-70 μm in diameter, with heavily thickened walls and a narrow lumen. Needle crystals of calcium oxalate small, occurring in parenchymatous cells.

(2) Heat under reflux 2 g of the powder with 25 ml of ethanol for 1 hour and filter. Evaporate the filtrate to dryness. Dissolve the residue in 1 ml of ethanol as the test solution. Dissolve sinomenine CRS in ethanol to produce a solution containing 1 mg per ml as the reference solution. Carry out the method for thin layer chromatography (Appendix VI B), using silica gel G mixed with a 2% solution of sodium hydroxide as the coating substance and the upper layer of a mixture of toluene, ethyl acetate, methanol and water (2 : 4 : 2 : 1) standing below 10℃ as the mobile phase. Apply separately to the plate 5 μl of each of the above two solutions. After developing and removal of the plate, dry in air. Spray with potassium iodobismuthate TS and sodium nitrite in ethanol TS, successively. The spot in the chromatogram obtained with the test solution corresponds in position and colour to the spot in the chromatogram obtained with the reference solution.

Total ash Not more than 6.0 per cent (Appendix IX K).

Assay Carry out the method for high performance liquid chromatography (Appendix VI D).

Chromatographic system and system suitability Use octadecylsilane bonded silica gel as the stationary phase and a mixture of methanol and phosphate BS (to 0.005 mol/L sodium hydrogen phosphate solution, monitor the pH value to 8.0 with 0.005 mol/L sodium dihydrogen phosphate solution, and monitor the pH value to 9.0 with 1% triethylamine) (55 : 45) as the mobile phase. As detector a spectrophotometer set at 262 nm. The number of theoretical plates of the column is not less than 1500, calculated with reference to the peak of sinomenine.

Reference solution Dissolve a quantity of sinomenine CRS, weighed accurately, in methanol to produce a solution containing 0.5 mg per ml.

Test solution Weigh accurately 0.5 g of the powder (through No. 3 sieve) in a stopper conical flask, accurately add 20 ml of 70% ethanol, stopper well, weigh, ultrasonicate for 20 minutes (power 150 W, frequency 20 kHz), cool, weigh again and compensate the loss of the weight with 70% ethanol, shake thoroughly, filter, use the successive filtrate as the test solution.

Procedure Inject accurately 10 μl of each of the reference solution and the test solution, respectively, into the column, and calculate the content.

It contains not less than 0.5 per cent of sinomenine ($C_{19}H_{23}NO_4$), calculated with reference to the dried drug.

Processing Eliminate foreign matter, soak briefly, soften thoroughly, cut into thick slices, and dry.

Action To relieve rheumatic condition, remove obstruction of the channels and collaterals, and cause urination.

Indications Rheumatic joint pain and swelling; paralysis; itching.

Usage and dosage 6-12 g.

Storage Preserve in a dry place.

Caulis Spatholobi
(鸡血藤, Jixueteng)

Suberect Spatholobus Stem

Suberect Spatholobus Stem is the dried lianoid stem of *Spatholobus suberectus* Dunn (Fam. Leguminosae). The drug is collected in autumn and winter. removed from branch and leaf, cut into slice, and dried in the sun.

Description Elliptical, oblong or irregular oblique slices, 0.3-1 cm thick. Cork greyish-brown, sometimes greyish-white patches visible and appearing reddish-brown when the cork exfoliated. Texture compact and hard. In the transversely cut surface, xylem reddish-brown or brown, showing numerous pores of vessels; phloem with resinous secretion reddish-brown to blackish-brown, arranged alternately with xylem, forming 3-8 eccentric semi-circular rings; pith inclined to one side. Odour, slight; taste, astringent.

Identification (1) Transverse section: Cork consisting of several layers of cells with brownish-red contents. Cortex relatively narrow, showing groups of stone cells filled with brownish-red contents in lumen; parenchymatous cells containing prisms of calcium oxalate. Abnormal vascular bundles arranged by phloem alternating with xylem in several

whorls. In phloem, the outermost being a layer of sclerenchymatous cells, consisting of groups of stone cells and fibre bundles; most of rays pressed; secretory cells abundant, filled with brownish-red contents, usually several to 10 or more grouped and arranged tangentially in layers; fibre bundles relatively abundant, non-lignified to slightly lignified, surrounded by cells containing prisms of calcium oxalate, forming crystal fibres, the walls of crystal cells lignified and thickened; groups of stone cells scattered. Xylem rays sometimes containing brownish-red contents; vessels mostly single and scattered, subrounded, up to 400 μm in diameter; bundles of xylary fibres also forming crystal fibres; a few of xylary parenchymatous cells containing brownish-red contents.

(2) Heat under reflux 1 g of the powder with 100 ml of ethanol for 1 hour, filter, evaporate the filtrate to dryness, dissolve the residue in 2 ml of methanol, add 1 g of silica gel, stir well, expel the solvent, apply to a small column (1.0 cm in inner diameter) packed with silica gel (100-200 mesh, 2 g), pre-elute with 30 ml of petroleum ether (60-90℃). Elute with 40 ml of chloroform, evaporate the chloroform eluate to dryness, dissolve the residue in 0.5 ml of chloroform as the test solution. Dissolve formononetin CRS in methanol to produce a solution containing 1 mg per ml as the reference solution. Carry out the method for thin layer chromatography (Appendix Ⅵ B), using silica gel G as the coating substance and a mixture of chloroform and methanol (30 : 1) as the mobile phase. Apply separately to the plate 5-10 μl of the test solution and 5 μl of the reference solution. After developing and removal of the plate, dry in air, and examine under ultraviolet light at 254 nm. A fluorescent spot in the chromatogram obtained with the test solution corresponds in position and colour to the spot in the chromatogram obtained with the reference solution.

Water Not more than 13.0 per cent (Appendix Ⅸ H, method 1).

Total ash Not more than 4.0 per cent (Appendix Ⅸ K).

Acid-insoluble ash Not more than 0.6 per cent (Appendix Ⅸ K).

Extractives Carry out the method for determination of ethanol-soluble extractives (Appendix Ⅹ A, the hot extraction method), using ethanol as the solvent, not less than 8.0 per cent.

Processing Eliminate foreign matter, wash clean, soften thoroughly, cut into pieces, and dry in the sun.

Action To enrich the blood, activate blood circulation, and remove obstruction of the channels and collaterals.

Indications Menstrual disorders; anemia; numbness and paralysis; rheumatic arthralgia.

Usage and dosage 9-15 g.

Storage Preserve in a ventilated and dry place, protected from mould and moth.

Caulis Trachelospermi (络石藤, Luoshiteng)

Chinese Starjasmine Stem

Chinese Starjasmine Stem is the dried lianoid stem with leaf of *Trachelospermum jasminoides* (Lindl.) Lem. (Fam. Apocynaceae). The drug is collected from winter to next spring, removed from foreign matter, and dried in the sun.

Description Stem cylindrical, curved, much-branched, varying in length, 1-5 mm in diameter; externally reddish-brown, with dotted lenticels and adventitious roots; texture hard, fracture pale yellowish-white, frequently hollowed. Leaves opposite, short petioled; when being spread, elliptical or ovate-lanceolate, 1-8 cm long, 0.7-3.5 cm wide, margin entire, slightly rolled; upper surface dark green or brownish-green, lower surface relatively pale-coloured. Texture leathery. Odour, slight; taste, slightly bitter.

Identification Transverse section: Cork consisting of several layers of brownish-red cells, unicellular non-glandular hairs visible, thick-walled and warty. The inner side of cork possessing a cycle of stone cells, between cork and cycle of stone cells occurring prisms of calcium oxalate. Cortex narrow, phloem thin, non-lignified fibre bundles in the outer side, interruptedly arranged in a ring. Cambium in a ring. Xylem consisting of lignified cells, vessels commonly scattered singly. The inner part of xylem occurring internal cambium and phloem. In pith, lignified fibres in bundles, surrounded by parenchymatous cells containing prism of calcium oxalate. Pith usually ruptured.

Processing Eliminate foreign matter, wash clean, soften briefly, cut into sections and dry.

Action To dispel *wind* and remove obstruction from the channels and remove *heat* from blood and cause subsidence of swelling.

Indications Rheumatic arthritis with muscular contracture, aching of the loins and knees; inflammation of the throat, carbuncles and boils; traumatic injuries.

Usage and dosage 6-12 g; for external use, appropriate quantity of the fresh drug is pounded into paste for topical application.

Storage Preserve in a dry place.

Cera Chinensis (虫白蜡, Chongbaila)

Insect Wax

Insect Wax is the purified wax secreted by male insect of *Ericerus pela* (Chavannes) Guerin, which dwelling gregariously at the stem and branch of *Fraxinus chinensis* Roxb, *Ligustrum lucidum* Ait. (Fam. Oleaceae) or other species of the genus *Ligustrum*.

Description White or whitish masses. The surface smooth or slightly wrinkled, lustrous. Texture light, hard, somewhat fragile, broken when rubbing. Fracture stripe-shaped or granular. Odour, slight; tasteless.

Melting point 81-85℃ (Appendix Ⅶ C).

Acid value Not more than 1 (Appendix Ⅸ N).

Saponification value 70-92 (Appendix Ⅸ N).

Iodine value Not more than 9 (Appendix Ⅸ N).

Usage Excipient and lubricant for making pills and tablets.

Storage Preserve in well closed containers, stored in a cool place.

Cera Flava
(蜂蜡，Fengla)

Beeswax

Beeswax is the wax secreted by *Apis cerana* Fabricius or *Apis mellifera* Linnaeus. (Fam. Apidae). The drug is collected by heating the honeycomb with water, filtering while hot, cooling, and purified.

Description Irregular masses, varying in size. Externally yellow, pale yellowish-brown or yellowish-white, opaque or slightly transparent, smooth. Texture light, waxy; fracture sandy, soften when rubbing. Odour, aromatic, resembling honey; taste, slightly sweet.

Processing Melt before use, clarify, and eliminate foreign matter.

Action To arrest discharges, promote healing of wounds and tissue regeneration, and alleviate pain.

Indications Ulcer difficulty to heal, wounds, burns and scalds.

Usage and dosage For external use, appropriate quantity is melted and applied topically; often used as excipient and ground substanse of ointments.

Storage Preserve in a cool place, protected from heat.

Cinnabaris
(朱砂，Zhusha)

Cinnabar

Cinnabar is a mineral of sulfides of cinnabar group, containing mainly mercuric sulfide (HgS). The mineral is collected, and the clean part is sorted out, removed from foreign matter containing iron with magnet, and freed from foreign stone and soil by washing.

Description Aggregates of granulous or lumpy masses, in granules or pieces, bright red or dark red, streak red to brownish-red, lustrous. Texture heavy and fragile. Pieces easily broken and granules with glittering gloss. Odourless and tasteless.

Identification (1) Moisten the powder with hydrochloric acid, rub on a clean surface of copper slice. The surface shows the silver gloss, which disappears immediately on heating.
(2) Dissolve 2 g of the powder in 2 ml of a mixture of hydrochloric acid and nitric acid (3 : 1), evaporate to dryness. Dissolve the residue in 2 ml of water and filter. The filtrate yields the reactions characteristic of mercuric salts and sulfates (Appendix Ⅳ).

Iron Boil 1 g of the powder with 20 ml of dilute hydrochloric acid TS for 10 minutes, allow to cool, filter into a 250 ml volumetric flask, neutralize with sodium hydroxide TS, and dilute with water to volume. Carry out the limit test for iron (Appendix Ⅸ D), using 10 ml. Any colour produced is not more intense than that of a reference solution prepared with 4 ml of ferric standard solution (0.1%).

Assay Dissolve about 0.3 g of the powder, weighed accurately, with 10 ml of sulfuric acid and 1.5 g of potassium nitrate in a conical flask by heating. Allow to cool, add 50 ml of water and 1% potassium permanganate solution until a pink colour is produced, then add dropwise 2% ferrous sulfate solution until the pink colour disappears. Add 2 ml of ammonium ferric sulfate IS and titrate with ammonium thiocyanate (0.1 mol/L) VS. Each ml of ammonium thiocyanate (0.1 mol/L) VS is equivalent to 11.63 mg of mercuric sulfide (HgS).
It contains not less than 96.0 per cent of mercuric sulfide (HgS).

Processing *Cinnabaris powder* Remove iron powder with magnet; or levigate as described under the method for levigating (Appendix Ⅱ D), and dry in air or below 40℃. Bright red and very fine powder, texture light, without granules when kneaded by fingers, without iron powder when absorbed by magnet. Odourless and tasteless. It complies with the above tests for identification (1), (2) and Iron.

Dissolvable mercuric salts Dissolve 1 g of the powder in 10 ml of water, shake well, filter, and allow to stand. The filtrate should not yield the reactions characteristic of mercuric salts (Appendix Ⅳ).
Weigh accurately about 0.20 g of the powder, carry out the above method for assay, it contains not less than 98.0 per cent of mercuric sulfide (HgS).

Action To cause sedation and counteract *toxicity*.

Indications Palpitation, insomnia and dream-disturbed sleep; epilepsy, mania, infantile convulsion; blurred vision; ulcers in the mouth; painful swelling of the throat; boils and sores.

Usage and dosage 0.1-0.5 g. It is usually used in pills or powder and not decocted.

Precaution For oral administration, large doses or long term administration of small doses should be avoided because of the toxicity; contraindicated in patients with hepatic or renal dysfunction.

Storage Preserve in a dry place.

Colla Carapax et Plastrum Testudinis
(龟甲胶，Guijiajiao)

Glue of Tortoise Shell

Glue of Tortoise Shell is the solid glue prepared from tortoise shell by decoction and concentration.

Procedure Soak tortoise shell in water and rinse clean, decoct with water several times, filter and combine the filtrates (or add a little fine powder of alum), allow to stand, filter, concentrate the glutinous filtrate (or add appropriate amount of yellow rice wine, crystal sugar, soybean oil) to thick glue, allow to cool and congeal, cut into pieces and dried in the air.

Description Rectangular or square flat pieces. Dark brown. Texture hard and fragile, fracture bright, transparent when looking against the light. Odour, slightly stinking; taste, weak.

Identification Dissolve 2 g in 10 ml of water, filter, and test the successive filtrate as follow:
(1) To 1 ml of the filtrate add 0.5 ml of ninhydrine TS, heat on a water bath for 15 minutes. A bluish violet colour is produced.
(2) To 1 ml of the filtrate add several drops of a freshly prepared mixture of 1% solution of cupric sulfate and 40%

solution of sodium hydroxide (1 : 1), and shake. A redish violet colour is produced.

Water Weigh accurately 1 g, add 2 ml of water, heat to dissolve and evaporate to dryness. Keep the thickness not over than 2-3 mm, carry out the method for determination of water (Appendix Ⅸ H, method 1), not more than 15.0 per cent.

Heavy metals Carry out the limit test for heavy metals (Appendix Ⅸ E, method 2), using the ignited residue (Appendix Ⅸ J), not more than 30 ppm.

Insoluble matter in water Weigh accurately 1.0 g of the powder, add 10 ml of water and heat to dissolve. Transfer to a 10 ml centrifuge tube previously dried to constant weight, centrifuge, discard the oil slick on tube wall and the supernatant. Add warm water to volume along the tube wall, centrifuge, wash 3 times in the same manner and discard the supernatant. Heat the centrifugal tube at 105℃ for 2 hours, take out, cool at a dryer for 30 minutes, weigh accurately and calculate, not less than 2.0 per cent.

Other requirements Complies with the general requirements for glues (Appendix Ⅰ G).

Assay Weigh accurately 0.2 g of the powder, carry out the method for determination of nitrogen (Appendix Ⅸ L, method 1), it contains not less than 9.0 per cent of the total nitrogen (N).

Action To nourish *yin* and blood, and arrest bleeding.

Indications Consumptive fever and night sweating due to deficiency of *yin*; weakness and aching of the loins and knees; anemia; abnormal uterine bleeding, excessive leukorrhea.

Usage and dosage 3-9 g, taken after melted in decoction.

Storage Preserve in well closed container.

Colla Corii Asini (阿胶, Ejiao)

Donkey-hide Glue

Donkey-hide Glue is the solid glue prepared from the dried or fresh skin of *Equus asinus* Linnaeus (Fam. Equidae) by decoction and concentration.

Procedure Soak the donkey-hide, remove the hairs, cut into small pieces, rinse again, decoct with water several times, filter and combine the filtrates. Concentrate the glutinous filtrate (or add a quantity of yellow rice wine, crystal sugar, soya-bean oil, respectively) to thick glue, allow to cool and congeal, cut into pieces, and dry in the air.

Description Rectangular, square piece or small piece, dark-brown, lustrous. Texture hard and fragile, fracture lustrous, fragment brown and translucent when looking against the light. Odour, slight; taste, slightly sweet.

Identification To 0.2 g of the coarse powder, add 8 ml of hydrochloric acid solution, (6 mol/L) hydrolyzed at 105℃ for 6 hours, add 6 ml of water, mix well and filter. Evaporate the filtrate to dryness, and dissolve the residue in 10 ml of methanol as the test solution. Dissolve glycine CRS in methanol to prepare a solution containing 1 mg per ml as the reference solution. Carry out the method for thin layer chromatography (Appendix Ⅵ B), using silica gel G as the coating substance and a mixture of phenol and 5% solution of borax (4 : 1) as the mobile phase. Apply separately to the plate 2 μl of the test solution and 1 μl of the reference solution. After developing and removal of the plate, dry in air. Spray with a 0.2% solution of ninhydrine in ethanol and heat at 105℃ to the spots clear. The spot in the chromatogram obtained with the test solution corresponds in position and colour to the spot obtained with the reference solution.

Water Heat to dissolve 1 g, accurately weighed, in 2 ml of water, and evaporate to dryness on a water bath. Keep the thickness not over than 2-3 mm. Carry out the method for the determination of water (Appendix Ⅸ H, method 1), not more than 15.0 per cent.

Total ash Not more than 1.0 per cent (Appendix Ⅸ K), using 1 g.

Heavy metals Carry out the limit test for heavy metals (Appendix Ⅸ E, method 2), using the residue obtained under the test for total ash, not more than 30 ppm.

Arsenic To 2 g add 1 g of calcium hydroxide and a small quantity of water, stir well. After drying, ignite gently at first and then incinerate at 500-600℃. Allow to cool, dissolve the residue in 3 ml of hydrochloric acid and a quantity of water to 30 ml. To 10 ml of the solution, add 4 ml of hydrochloric acid and 14 ml of water, carry out the limit test for arsenic (Appendix Ⅸ F), not more than 3 ppm.

Insoluble matter in water Weigh accurately 1.0 g of the powder, add 10 ml of water and heat to dissolve. Transfer to a 10 ml centrifuge tube previously dried to constant weight, centrifuge, discard the oil slick on tube wall and the supernatant. Add warm water to volume along the tube wall, centrifuge, wash 3 times in the same manner and discard the supernatant. Heat the centrifugal tube at 105℃ for 2 hours, take out, cool in a dryer for 30 minutes, weigh accurately and calculate, not less than 2.0 per cent.

Volatile alkaline substance Weigh accurately 5 g to a 100 ml volumetric flask, add water to dissolve and dilute to volume, mix well. Transfer accurately 5 ml to a Kjeldahl flask, add 5 ml of 1% magnesium oxide suspension immediatly, stopper immediately and tightly, distill with steam, and collect the distillate into 5 ml of 2% boric acid solution, add 5 drops of a mixed indicator of methyl red and bromocresol green IS, collect the distillate for 7 minutes from the first drop. Carry out the method for the determination of nitrogen (Appendix Ⅸ L method 2) with the distillate. It contains not more than 100 mg of volatile alkaline matter in 100 g of the drug, calculated as nitrogen (N).

Other requirements Complies with the general requirements for glues (Appendix Ⅰ G).

Assay Weigh accurately 0.2 g of the powder, carry out the method for determination of nitrogen (Appendix Ⅸ L, method 1), it contains not less than 13.0 per cent of the total nitrogen (N).

Processing *Colla Corii Asini*: Break to pieces.

Bead of Colla Corii Asinin Soften Colla Corii Asini by gentle heating, cut into small pieces. Scald with clam shell powder as described under the method for scalding (Appendix Ⅱ D) to produce beads without soft core.

Action To nourish *yin* and blood, relieve *dryness*, and arrest bleeding.

Indications Anemia with dizziness; palpitation and muscular weakness; insomnia numbness and tremors due to deficiency of blood; dry cough; hemoptysis, hematemesis, hematuria, excessive menstrual discharge, uterine bleeding during pregnancy.

Usage and dosage 3-9 g, taken after melted in decoction.

Storage Preserve in well closed container.

Colla Cornus Cervi
(鹿角胶, Lujiaojiao)

Deerhorn Glue

Deerhorn Glue is a solid glue prepared from deerhorn by decoction and concentration.

Procedure Saw the deerhorn into pieces, soak in water and rinse until clear. Decoct with water several times, filter, combine the filtrates (or add a little fine powder of alum), allow to stand and filter. Concentrate the glutinous filtrate (or add a quantity of yellow rice wine, crystal sugar, soybean oil) to thick glue, allow to cool and congeal, cut into pieces, and dry in the air.

Description Square flat pieces, yellowish-brown or reddish-brown, translucent, some with a yellowish-white foam layer in the upper part. Texture fragile, easily broken; fracture bright. Odour slight; taste, slightly sweet.

Identification To 0.4 g of the powder add 5 ml of 70% ethanol, ultrasonicate for 15 minutes, filter and use the filtrate as the test solution. Dissolve glycine CRS in 70% ethanol to produce a solution containing 0.5 mg per ml as the reference solution. Carry out the method for thin layer chromatography (Appendix Ⅵ B), using silica gel G as the coating substance and a mixture of *n*-butanol, glacial acetic acid and water (3 : 1 : 1) as the mobile phase. Apply separately to the plate 5 μl of the above two solutions. After developing and removal of the plate, dry in air. Spray with ninhydrine TS and heat at 105℃ to the spots clear. The spot in the chromatogram obtained with the test solution corresponds in position and colour to the spot obtained with the reference solution.

Water Weigh accurately 1 g, add 2 ml of water, heat to dissolve and evaporate to dryness. Keep the thickness not over than 2-3 mm, carry out the method for determination of water (Appendix Ⅸ H, method 1), not more than 15.0 per cent.

Total ash Not more than 3.0 per cent (Appendix Ⅸ K), using 1.0 g.

Heavy metals Carry out the limit test for heavy metals (Appendix Ⅸ E, method 2), using the residue obtained under the test for Total Ash, not more than 30 ppm.

Arsenic To 1.0 g add 1 g of calcium hydroxide and a small quantity of water, stir well. After drying, ignite gently at first and then incinerate at 500-600℃. Allow to cool, add 5 ml of hydrochloric acid and 2 ml of water, carry out the limit test for arsenic (Appendix Ⅸ F), not more than 2 ppm.

Insoluble matter in water Weigh accurately 1.0 g of the powder, add 10 ml of water and heat to dissolve. Transfer to a 10 ml centrifuge tube previously dried to constant weight, centrifuge, discard the oil slick on tube wall and the supernatant. Add warm water to volume along the tube wall, centrifuge, wash 3 times in the same manner and discard the supernatant. Heat the centrifugal tube at 105℃ for 2 hours, take out, cool in a dryer for 30 minutes, weigh accurately and calculate, not less than 2.0 per cent.

Other requirements Complies with the general requirements for glues (Appendix Ⅰ G).

Assay Weigh accurately 0.2 g of the powder, carry out the method for determination of nitrogen (Appendix Ⅸ L, method 1), it contains not less than 10.0 per cent of the total nitrogen (N).

Action To warm the kidney, replenish the liver, and to nourish vital essence and blood.

Indications Impotence, spermatorrhea, aching in the loins and knees accompanied with cold sensation; debility and emaciation; abnormal uterine bleeding, hematochezia, hematuria; abscesses in *deficiency-cold* condition.

Usage and dosage 3-6 g, taken after melted decoction.

Specification 6 g per piece.

Storage Preserve in well closed container.

Concha Arcae
(瓦楞子, Walengzi)

Arc Shell

Arc Shell is the shell of *Arca subcrenata* Lischke, *Arca granosa* Linnaeus or *Arca inflata* Reeve (Fam. Arcidae). The drug is collected from autumn or winter to next spring, washed clean, treated with boiling water for a moment, removed from soft part, and dried.

Description *Shell of Arca subcrenata* Somewhat triangular or fan-shaped, 4-5 cm long, 3-4 cm high. The outer surface bulgy, with brownish minute hairs or dropped. The umbo projecting, curling inwards, 30-34 ribs radiated from the umbo to the ventral side. The inner surface of the shell smooth, white, with depressions on the margin corresponding to the ribs on the outer surface. The hinge bearing a row of denticles. Texture hard. Odour, slight; taste, weak.

Shell of Arca granosa 2.5-4 cm long, 2-3 cm high. The outer surface without brownish minute hairs, 18-21 radiate ribs with granular protuberances.

Shell of Arca inflata 7-9 cm long, 6-8 cm high. The outer surface with 42-48 radiate ribs.

Processing *Concha Arcae* Wash clean, dry and break to pieces.

Concha Arcae (calcined) Calcine clean Concha Arcae as described under the method for calcining openly (Appendix Ⅱ D) until it becomes crisp.

Action To eliminate *phlegm*, remove blood stasis, to soften hard masses and dissolve lumps, and relieve gastric pain by reducing acid.

Indications Retention of sticky phlegm difficult to expectorate; goitre, scrofula, masses in the abdomen; gastric pain with acid regurgitation.

Usage and dosage 9-15 g, decocted first.

Storage Preserve in a dry place.

Concha Haliotidis
(石决明, Shijueming)

Abalone Shell

Abalone Shell is the shell of *Haliotis diversicolour*

Reeve, *Haliotis discus hannai* Ino., *Haliotis ovina* Gmelin, *Haliotis ruber* (Leach), *Haliotis asinina* Linnaeus or *Haliotis laevigata* (Donovan) (Fam. Haliotidae). The drug is collected in summer or autumn, removed from the soft part, washed clean, and dried.

Description *Shell of Haliotis diversicolour* Elongate ovoid, inner side somewhat ear-like; 7-9 cm long, 5-6 cm wide, about 2 cm high. The outer surface dark red, with many irregular spiral ribs and fine growth lines; the spire small, the shell body large; more than 20 tubercular protuberances arranged towards right from the apex of the spire part, each of the last 6-9 protuberances with an opening on the same level with the shell surface. The inner surface smooth, with pearlaceous coloured lustre. The shell relatively thick, texture hard, uneasily broken. Odourless; taste, slightly salty.

Shell of Haliotis discus Oblong, 8-12 cm long, 6-8 cm wide, 2-3 cm high. The outer surface greyish-brown, with many rough and irregular wrinkles, growth lines distinct, usually with attachments such as bryozoans or spirobis, each of the last 4-5 protuberances with an opening above the shell surface. The shell relatively thin.

Shell of Haliotis ovina Subrounded, 4-8 cm long, 2.5-6 cm wide, 0.8-2 cm high. The umbo near the mid-portion and higher than the surface of shell, the spire and the shell body each occupying about one half of the shell surface, the border of the spire bearing 2 rows of neat protuberances, more conspicuous at the upper part, the last 4-5 protuberances with tubiform openings.

Shell of Haliotis ruber Flat ovoid, 13-17 cm long, 11-14 cm wide, 3.5-6 cm high. The outer surface brick-red, the spire occupying about one half of the shell surface, the spiral ribs and growth lines wavy ridged; with about 30 tubercular protuberances, each of the last 7-9 protuberances with an opening above the shell surface.

Shell of Haliotis asinina Long and narrow, somewhat twisted, ear-like, 5-8 cm long, 2.5-3.5 cm wide, about 1 cm high. The outer surface smooth, with patterns of jade green, purple, brown colour, etc.; the spire small, the shell body large; each of the last 5-7 protuberances with an opening on the same level with the shell surface, mostly ellipsoidal. The shell thin, texture relatively fragile.

Shell of Haliotis laevigata Ovoid, 11-14 cm long, 8.5-11 cm wide, 3-6.5 cm high. The outer surface brick-red, smooth, the umbo higher than the shell surface, growth lines relatively conspicuous; the spire occupying about one third of the shell surface, about 30 tubercular protuberances, each of the last 9 protuberances with an opening on the same level with the shell surface.

Processing *Concha Haliotides* Eliminate foreign matter, wash clean, dry and break to pieces.

Concha Haliotidis (calcined) Calcine clean Concha Haliotidis as described under the method for calcining openly (Appendix Ⅱ D) until it becomes crisp.

Action To subdue hyperactivity of the liver, quench its *fire* and improve eyesight.

Indications Headache and dizziness; blurred vision due to nebula, optic atrophy and night blindness.

Usage and dosage 3-15 g, decocted first.

Storage Preserve in a dry place.

Concha Margaritifera (珍珠母, Zhenzhumu)

Nacre

Nacre is made of the shell of fresh-water clams, *Hyriopsis cumingii* (Lea) and *Cristaria plicata* (Leach) (Fam. Unionidae) or *Pteria martensii* (Dunker) (Fam. Peteriidae). The drug is collected, removed from muscles, washed clean and dried.

Description *Shell of Hyriopsis cumingii* Somewhat in scalene tetragonal. The growth lines of outer surface arranged in concentric rings, dorsal posterior margin projected upward, forming large triangular sail-like hind wing. The inner surface with distinct trace of mantle; trace of anterior adductor somewhat ovoid, trace of posterior adductor somewhat triangular. Both left and right shells with 2 pseudo-cardinal teeth, left shell with 2 slat lateral teeth, right shell with 1 slat lateral tooth; lustrous. Texture hard. Odour, slightly stinking; taste, weak.

Shell of Cristaria plicata In scalene triangular. Dorsal posterior margin expand upward, forming large crest. The inner surface with somewhat distinct trace of mantle; trace of anterior adductor large and wedge-shaped, trace of posterior adductor irregular ovoid, longitudinal ribs, convex and concave below posterior lateral tooth correspond to those of the outer surface. Both left and right shells with 1 short and slight thick posterior lateral tooth and 1 tiny weak anterior lateral tooth, both with no pseudo-cardinal tooth.

Shell of Pteria martensii In oblique square, posterior ear large, anterior ear small, dorsal margin flat and straight, ventral margin rounded, growth lines very thin and dense, in the form of slices, trace of adductor large, elongate rounded, with 1 protruded long cardinal tooth.

Identification (1) Powder: Whitish. Irregular broken pieces, surface mostly uneven, with distinct granular nature, some in laminated structure, margin mostly irregular serrated.
(2) To the powder, add dilute hydrochloric acid, a lot of bubbles are produced immediately, filter, the filtrate yields the reaction characteristic of calcium salts (Appendix Ⅳ).

Processing *Concha Margaritifera* Eliminate foreign matter, break to pieces.

Concha Margaritifera (calcined) Calcine the clean Concha Margaritifera as described under the method for calcining openly (Appendix Ⅱ D) until it becomes crisp.

Action To subdue hyperactivity of the liver, calm the nerves, and improve vision.

Indications Headache, dizziness, fidgetness and insomnia; inflammation of the eyes due to *heat* in the liver; blurred vision in deficiency of the liver.

Usage and dosage 10-25 g, decocted first.

Storage Preserve in a dry place, protected from dust.

Concha Meretricis seu Cyclinae (蛤壳, Geqiao)

Clam Shell

Clam Shell is the shell of *Meretrix meretrix*

Linnaeus or *Cyclina sinensis* Gmelin (Fam. Veneridae). The drug is collected in summer or autumn, removed from soft part washed clean, dried in the sun.

Description *Shell of Meretrix meretrix* Fan-like or subrounded, the dorsal margin somewhat triangular; the ventral margin arch-like, 3-10 cm long, 2-8 cm high. The umbo projected, slightly near the front of the dorsal side. The outer surface smooth, yellowish-brown, with distinct concentric growth lines, the dorsal part usually with serrated or undulated brown stripes. The inner surface white, no tooth-like stripes at the margin, the front and hind shell margins sometimes slightly purple. The hinge rather wide. The right shell with three cardinal teeth and two front lateral teeth; the left shell with three cardinal teeth and one front lateral tooth. Texture hard, fracture with laminated stripes. Odour, slight; taste, weak.

Shell of Cyclina sinensis Subrounded, the umbo projected, located near the middle of the dorsal side. The outer surface pale yellow or brownish-red, the concentric growth lines projected from the shell, somewhat like circular ribs. The inner surface white or pink, the margin often purple and with neat small tooth-like stripes. Both the right and left shells with three cardinal teeth, but no lateral tooth at the hinge.

Processing *Concha Meretricis seu Cyclinae* Wash clean, break to pieces and dry.

Concha Meretricis seu Cyclinae (*calcined*) Calcine the Concha Meretricis seu Cyclinae as described under the method for calcining openly (Appendix Ⅱ B) until it becomes crisp.

Action To remove *heat* and resolve *phlegm*, soften hard masses and eliminate nodulations, and alleviate epigastric pain by inhibiting acid secretion.

Indications Cough, chest pain and bloody sputum caused by *heat* in the lung; scrofula, goitre; epigastric pain associated with acid regurgitation; external use for eczema and scalds.

Usage and dosage 6-15 g, decocted first; powdered concha; decocted with wrapping; for external use, appropriate quantity is ground into extremely fine powder and sprayed on the lesions or applied topically after mixing with oil.

Storage Preserve in a dry place.

Concha Ostreae (牡蛎, Muli)

Oyster Shell

Oyster Shell is the shell of *Ostrea gigas* Thunberg, *Ostrea talienwhanensis* Crosse or *Ostrea rivularis* Gould (Fam. Osteridae). The drug is collected all the year round, removed from soft part, washed clean, and dried in the sun.

Description *Shell of Ostrea gigas* In elongated pieces, dorsal and ventral edges almost parallel, 10-50 cm long, 4-15 cm high. The right shell relatively small, scales strong and thick, arranged in layers or striated. The outer surface smooth or with several depressions, pale purple, greyish-white or yellowish-brown; the inner surface porcelain white, without denticles at both sides of the umbo. The left shell deeply depressed, scales bigger and more rough than those of the right shell, attachment surface of the umbo small. Texture hard, fracture stratiform, white. Odour, slight; taste, slightly salty.

Shell of Ostrea talienwhanensis Subtriangular, dorsal and ventral edges V-shaped. The outer surface of the right shell pale yellow, concentric scales arranged loosely and undulated up and down; the inner surface white. The left shell bearing strong and thick concentric scales, several distinct ribs radiated from the umbo, the inner surface concaved in box-shaped; hinge surface small.

Shell of Ostrea rivularis Rounded, oval or triangular. The outer surface of the right shell slightly uneven, grey, purple, brown, yellow, etc; concentric scales in a ring, thin and fragile when immature and overlaped one another after several years growth. The inner surface white, sometimes the edge pale purple.

Processing *Concha Ostreae* Wash clean, then dry and grind to pieces.

Concha Ostreae (*calcined*) Calcine the clean Concha Ostreae as described under the method for calcining openly (Appendix Ⅱ D) until it becomes crisp.

Action To induce sedation, to nourish *yin* and subdue the overflowing of *yang*, and to soften hard masses and eliminate nodulation.

Conch Ostreae (*calcined*) To arrest discharge.

Indications Palpitation, insomnia, dizziness and tinnitus; scrofula, masses in the abdomen.

Concha Ostreae (*calcined*) Spontaneous sweating, night sweating; seminal emission; abnormal uterine bleeding, excessive leukorrhea; epigastric pain with acid regurgitation.

Usage and dosage 9-30 g, decocted first.

Storage Preserve in a dry place.

Concretio Silicea Bambusae (天竺黄, Tianzhuhuang)

Tabasheer

Tabasheer is the dired masses of secretion in stem of *Bambusa textilis* McClure or *Schizostachyum chinense* Rendle (Fam. Gramineae). The drug is collected in autumn and winter.

Description Irregular pieces or granules, varying in size. Externally greyish-blue, greyish-yellow or greyish-white, some pure white, translucent, somewhat lustrous. Texture light, hard and fragile, easily broken; strongly hygroscopic. Odour, slight; taste, weak.

Identification (1) Ignite and incinerate a quantity of the drug, dissolve the residue in a mixture of 1 volume of hydrochloric acid and 1 volume of nitric acid, filter. To the filtrate add ammonium molybdate TS, shake, then add ferrous sulfate TS, a blue colour is produced.
(2) Spot 1 drop of potassium ferrocyanide TS to a piece of filter paper, allow to dry, apply 1 drop of the drug solution in hydrochloric acid, 10 drops of water and 1 drop of 0.1% alizarin red solution in ethanol; a red ring in a violet spot is produced on exposing to ammonia vapour.

Volume ratio Place gently 10 g of powder of medium size to a measuring cylinder, the volume is not less than 35 ml.

Water absorbing capacity To 5 g of the powder add 50 ml of water, allow stand for a moment, filter through moistened filter paper, the filtrate is not more than 44 ml.

Action To remove *phlegm-heat*, cool the heart and counteract convulsions.

Indications Impairment of consciousness in febrile diseases, stroke, infantile convulsion and night crying caused by *phlegm-heat*.

Usage and dosage 3-9 g.

Storage Preserve in well closed containers, stored in a dry place.

Cordyceps
(冬虫夏草, Dongchong xiacao)

Chinese Caterpillar Fungus

Chinese Caterpillar Fungus is a composite consisting of the stroma of the fungus, *Cordyceps sinensis* (Berk.) Sacc. (Fam. Hypocreaceae), parasitized on the larva of some species of insects (Fam. Hepialidae), and the dead caterpillar. The drug is collected in early summer while the stromata have come up out of the ground but the spores have not ejected, partially dried in the sun, removed from the attached fibrous matter and other impurities, and dried in the sun or at a low temperature.

Description A dead caterpillar jointed with a stroma growing in the head of the larva. The caterpillar resembling a silkworm, 3-5 cm long, 3-8 mm in diameter; externally deep yellow to yellowish-brown, with 20-30 annulations, some of those near the head relatively fine; head reddish-brown, feet 8 pairs, the 4 pairs in the middle relatively conspicuous; texture fragile, easily broken, fracture slightly even, yellowish-white. Stromata slenderly cylindrical, 4-7 cm long, about 3 mm in diameter; externally deep brown to brown, with fine longitudinal wrinkles, slightly swollen above. Texture flexible, fracture whitish. Odour, fleshy; taste, slightly bitter.

Assay Carry out the method for high performance liquid chromatography (Appendix Ⅵ D).

Chromatographic system and system suitability Use octadecylsilane bonded silica gel as the stationary phase and phosphate BS (pH 6.5) [add 68.5 ml of sodium dihydrogen phosphate solution (0.01 mol/L) to 31.5 ml of disodium hydrogen phosphate solution (0.01 mol/L) and mix well (pH 6.5)] -methanol (17 : 3) as the mobile phase. As detector a spectrophotometor set at 260 nm. The number of theoretical plates of the column is not less than 2000, calculated with the reference to the peak of adenosine.

Reference solution Weigh accurately a quantity of adenosine CRS, add 90% methanol to prepare a solution containing 20 μg per ml and use as the reference solution.

Test solution Weigh accurately about 0.5 g of the powder (through No. 3 sieve) in a stoppered conical flask, add accurately 10 ml of 90% methanol, stopper tightly, mix well and weigh the quantity, heat and reflux for 30 min, allow to cool, weigh again, add 90% methanol to the definite weight, mix well, filter, collect the successive filtrate as the test solution.

Procedure Inject accurately 10 μl of each of the reference solution and the test solution respectively into the column, determine and calculate the content.

It contains not less than 0.010 per cent of adenosine ($C_{10}H_{13}N_5O_4$).

Action To tonify the lung and the kidney, arrest bleeding, and dissolve *phlegm*.

Indications Chronic cough and asthma; hemoptysis in phthisis; impotence and seminal emission with aching of loins and knees.

Usage and dosage 3-9 g.

Storage Preserve in a cool and dry place, protected from moth.

Coriolus
(云芝, Yunzhi)

Coriolus Versicolour Sporphore

Coriolus Versicolour Sporphore is the dried sporphore of *Coriolus versicolour* (L. ex Fr.) Quel. (Fam. Polyporaceae). The drug is collected all the year, removed from foreign matter, and dried in the sun.

Description The single pileus fan-shaped, semi-rounded or conchoidal, usually piled as imbricated or torus-shaped of lotus flower, 1-10 cm in diameter, 1-4 mm thick. Surface with gray, brown, blue, and purplish-black hairs, densely grown, arranged in the concentric circles with several colour, edge thin. The ventral part grayish-brown, yellowish-brown, or pale yellow, and white at the others, fungi tubes arranging densely, the opening almost round or polygonal, some of them with terminal teeth. Shell's texture leathery, uneasily broken, fracture sub-white, about 1 mm thick, fungi tubes mono layer, 0.5-2 mm, mostly pale brown the opening round or polygonal, 3 to 5 cells per mm^2. odour, light; taste, weak.

Identification (1) Longitudinal section: Observing under an anatomic microscope: Shell exterior with hairs layer, composed of different hyphaes in length, no branch, arranging densely, containing numerous pigment granules. Sporphore layer thick, colourless, hyphaes arranging densely. Fungi tube layer situated at the lowest-side, composed of fungi tubes, and arranging in order.

Powder: Pale yellow. Spores cylinder, curved slightly, 5-7 μm long, 2-3 μm in diameter, composed of two walls, out wall flat and colourless, inner wall pale brown. Hyphae divided four kinds: hair hypha colourless, one or some cells connected, no branch, 3-5 μm in diameter, wall with numerous granular substance; skeleton hypha relatively wide, 5-7 μm in diameter, no branch, cell wall relatively smooth, colourless; the wall of breeding hypha very thin and transparent, 3-4 μm in diameter, no branch, cell wall smooth; entwining hypha relatively thin, 1.5-4 μm in diameter, usually curved.

(2) To 2 g of the coarse powder add 20 ml of water, heat on a water bathe for 10 minutes, filter. To 2 ml of filtrate add 4-5 drops of alkaline cupric tartrate TS, heat on a water bathe for 5 minutes. A red precipitate is produced.

Total ash Not more than 6.0 per cent (Appendix Ⅸ K).

Acid-insoluble ash Not more than 4.0 per cent (Appendix Ⅸ K).

Extractives Carry out the hot extraction method for determination of water-soluble extractives (Appendix Ⅹ A), not less than 18.0 per cent.

Assay ***Total saccharides*** Weight accurately 5 g of the coarse powder to a conical flask, add accurately 120 ml of water, weigh and heat under reflux on a water bath for 60 minutes, cool, weigh again and restore the original weight

with water to the initial weight, mix well, Filter through cotton wool. Measure accurately 10 ml of the filtrate, add 1-2 drops of phenolphthalein IS, and regulate the pH to neutral reaction with sodium hydroxide TS, add 25 ml of dilute sulfuric acid, heat under reflux on a water bath for 4 hours, cool to the room temperature, add accurately 25 ml of iodine (0.1 mol/L) VS, add dropsically 4 ml of sodium hydroxide TS and shake violently, stopper tightly, put in a dark place for 10 minutes, add 4 ml of dilute sulfuric acid, titrate immediately with sodium thiosulfate (0.1 mol/L) VS. Add 2 ml of starch IS near by the terminal point, titrate continually until the blue colour disappears. Perform a blank determination and make any necessary correction. Each ml of iodine (0.1 mol/L) is equivalent to 9.008 mg of anhydrous glucose ($C_6H_{12}O_6$).

Monosaccharide Measure accurately 40 ml of filtrat prepared as 'Total saccharides', add 1-2 drops of phenolphthalein IS, and adjust the pH to neutral with sodium hydroxide TS, and proceed as described under 'Total saccharides', beginning at the words "add accurately 25 ml of iodine (0.1 mol/L) VS, …". Each ml of iodine (0.1 mol/L) is equivalent to 9.008 mg of anhydrous glucose ($C_6H_{12}O_6$).
The content of mono saccharide subtracted from the content of Total saccharides is the content of Coriolus saccharide.
It contains not less than 3.2 per cent of Coriolus saccharide, calculated as anhydrous glucose ($C_6H_{12}O_6$), with reference to the dried drug.

Processing Eliminate foreign matter, wash clean, and dry.

Action To regulate the immunity function.

Indications Chronic hepatitis and active hepatitis.

Usage and dosage 9-27 g.

Storage Preserve in a ventilated and dry place.

Cornu Bubali
(水牛角, Shuiniujiao)

Buffalo Horn

Buffalo Horn is the horn of *Bubalus bubalis* Linnaeus (Fam. Bovidae). The drug is boiled with water, removed from bony plug, and dried.

Description Somewhat flattened and curved conical, varying in length. The surface brownish-black or greyish-black, with several transverse grooves on one side, and densely transverse depressed stripes on the other side. The upper part gradually pointed, with longitudinal stripes; the basal part somewhat triangular, hollowed. Texture horny, hard. Odour, slightly stinking; taste, weak.

Identification Powder: Greyish-brown. Irregular broken pieces pale greyish-white or greyish-yellow. In longitudinal section, slender spindle-shaped striations, longitudinal slits and minute greyish-brown pigment granules visible. In transverse section, spindle shaped striations parallely arranged, waved, with many yellowish-brown pigment granules. The surface of some broken pieces relatively even, pigment granules and slits less, poorly visible.

Processing Wash clean, cut to slices or file to coarse powder.

Action To remove *toxic-heat*, reduce *heat* in blood, and arrest convulsion.

Indications High fever, delirium and eruptions in epidemic diseases; spitting of blood, epistaxis; convulsion, mania.

Usage and dosage 15-30 g, decocted first over 3 hours.

Storage Preserve in a dry place, protected from mould.

Cornu Cervi
(鹿角, Lujiao)

Deer Horn (Antler)

Deer Horn is the ossified antler, or antler base which fallen off in the next spring after the pilose antler is cut, of *Cervus elaphus* Linnaeus or *Cervus nippon* Temminck (Fam. Cervidae), commonly known as "malujiao (red deer antler)", "Meihualujiao (sika deer antler)", "Lujiao tuopan (dropped disk of antler)" respectively. The drug is collected in spring, removed from mud and sand, dried in air.

Description *Malujiao* Branched, usually divided into 4-6 branches, 50-120 cm in total length. The main branch curved, 3-6 cm in diameter. The plate-like basal part with irregular protuberances, commonly known as "Zhenzhupan" (pearl plate), usually with sparse small pores at the margin of the plate. The side branches mostly stretched toward one side. The first side branch near the pearl plate, almost in right angle or in obtuse angle to the main branch; and the second branch stretched near the first one, commonly known as "Zuodifenzhi" (branches sit on the ground); the second branch is relatively apart from the third one. Externally greyish-brown or greyish-yellow, lustrous, tip smooth; the middle and lower parts usually with warty tubercles known as "Guding" (bony nail) and interrupted longitudinal ridges varying in length, commonly known as "Kugualeng" (balsam pear ridges). Texture hard. The outer part of the fracture bony, greyish-white or slightly brown, the central part usually greyish-brown or slaty, with honeycomb-like pores. Odour, slight; taste, slightly salty.

Meihualujiao Usually divided into 3-4 branches, 30-60 cm in total length, 2.5-5 cm in diameter. The side branches mostly stretched towards two sides. The first side branch near the pearl plate, the second one relatively apart from the first one. The end of the main branch divided into two small branches. Externally yellowish-brown or greyish-brown, the end of branches greyish-white, with distinct bony nails below the end of branches, and longitudinally arranged in the form of "Kugualeng". The tip of the bony nails greyish-white or greyish-yellow, lustrous.

Lujiaotuopan In helmet or flattened helmet, 3-6 cm in diameter (pearl plate 4.5-6.5 cm in diameter), 1.5-4 cm high. Externally greyish-brown or greyish-yellow, lustrous. Bottom surface even, honeycomb-like, mostly yellowish-white or yellowish-brown. The margin of the pearl plate usually with sparse small pores. The upper surface slightly even or irregular semispheroidal in shape. Texture hard. The outer part of the fracture bony, greyish-white or whitish.

Extractives Pulverize about 10 g of the transverse slices to midium powder, and stir well. Weigh accurately 4 g into a beaker, add 90 ml of water, heat to boil and keep slight boiling for 1 hour (make up the loss in water constantly), filter while hot, wash the residue with 10 ml of hot water, filter. Combine the filtrate to a 100 ml of volumetric flask, dilute with water to volumn. Measure accurately 25 ml of the solution, carry out the method for determination of water-soluble extractives (Appendix X A, the hot extraction method), not less than 17.0 per cent.

Processing Wash clean, saw into sections, soak in warm water, take out, cut into slices and dry in air; or powder with a file.

Action To warm the kidney and strengthen the tendons and bones, and promote blood circulation and cause subsidence of swelling.

Indications Impotence, seminal emission, back pain with cold sensation; abscesses in *deficiency-cold* condition ulcers and sores; mastitis at early stage marked by congestion, swelling and pain.

Usage and dosage 6-15 g.

Storage Preserve in a dry place.

Cornu Cervi Degelatinatum (鹿角霜, Lujiaoshuang)

Degelatined Deer-horn

Degelatined Deer-horn is the piece of antler removed from gelatin. The drug is produced in spring or autumn. The ossified antler is decocted to eliminate the gelatin. The piece of antler is taken out, and dried.

Description Long cylindrical or irregular pieces, varying in size. The surface greyish-white and powdery, often with longitudinal ridges, occasionally with grey or greyish-brown dots. Light, texture crisp, the outer layer of fracture relatively dense, white or greyish-white, the inner layer greyish-brown or greyish-yellow, with honeycomb-like pores. Hygroscopical. Odour, slight; taste, weak, with sense of sticky to teeth on chewing.

Processing Break to pieces before use.

Action To reinforce the *kidney-yang*, and arrest bleeding.

Indications *Yang-deficiency* of the spleen and the kidney characterized by anorexia, vomiting, diarrhea, excessive leukorrhea, enuresis or frequent urination; abnormal uterine bleeding; subcutaneous infection and nodulation.

Usage and dosage 9-15 g, decocted first.

Storage Preserve in a dry place.

Cornu Cervi Pantotrichum (鹿茸, Lurong)

Pilose Antler

Pilose Antler is the young unossified hairy antler of male *Cervus nippon* Temminck or *Cervus elaphus* Linnaeus (Fam. Cervidae). The former is known as "Hualurong" (sika deer pilose antler), the later known as "Malurong" (red deer pilose antler). The drug is collected in summer or autumn, processed, and dried in the shade or bake-dried.

Description *Hualurong* Branched, cylindrical. The antler with one side branch commonly known as "Ergang" (double branches); the main branch as "Dating" (big branch), 17-20 cm long, cut surface 4-5 cm in diameter; the side branch arosing at about 1 cm from the cut surface known as "Menzhuang" (side branch), 9-15 cm long, slightly smaller than "Dating" in diameter. The outer skin reddish-brown or brown, usually lustrous, densely covered with reddish-yellow or brownish-yellow soft hairs, relatively thick at the upper end, and sparse at the lower end, a greyish-black vein at the base between the main and side branches, the skin and hairs nestled closely each other. The cut surface yellowish-white, without bony element in the outer part, small pores densely distributed in the central portion. Texture light. Odour, slightly stinking; taste, slightly salty. The antler with two side branches commonly known as "Sancha" (triple branches), "Dating" 23-33 cm long and smaller than that of "Ergang" in diameter, slightly bow-shaped and flattened, the tip slightly pointed, the lower part usually bearing longitudinal ridged veins and lumps. Skin reddish-yellow, the soft hairs relatively sparse and thick.
The autumn pilose antler similar to the summer pilose antler, but "Dating" is longer and not round or lower part thicker than upper part, the lower part with longitudinal ridged veins. Skin greyish-yellow, the soft hairs relatively coarse. The outer part of the cut surface usually ossified. Rather heavy. No stinking odour.

Malurong Larger and thicker than Hualurong, more branched. The antler with one, two, three, four or more side branches commonly known as "Danmen" (single side branch), "Lianhua" (lotus), "Sancha" (triple side branches) and "Sicha" (quadruple side branches) respectively. Also divided into "Dongmalurong" (east red deer pilose antler) and "Ximalurong" (west red deer pilose antler) according to the producing area.

Dongmalurong "Dating" of "Danmen" 25-27 cm long, about 3 cm in diameter. The outer skin greyish-black, soft hairs greyish-brown or greyish-yellow. The outer skin of the cut surface rather thick, greyish-black. The central portion of the cut surface densely with small pores. Texture of the "Danmen" tender. "Dating" of "Lianhua" up to 33 cm long, with ridged veins at the lower part, the cut surface with relatively larger honeycomb-like pores. The skin of "Sancha" dark, texture rather tough. "Sicha" with sparse and thick soft hairs; the lower part of "Dating" with ridged veins and lumps, tip usually without soft hairs, commonly known as "Niantou" (hairless tip).

Ximalurong "Dating" 30-100 cm long, usually not round, tip round or flattened. The surface with ridges but usually shrunken and shrivelled. The branches rather long and curved; the soft hairs thick and long, grey or greyish-black. The cut surface in a relative dark colour and usually bony. Odour, stinking; taste, salty.

Identification (1) To about 0.1 g of the powder add 4 ml of water, heat for 15 minutes, cool and filter. To 1 ml of the filtrate add 3 drops of ninhydrin TS, mix well, boil for several minutes, a bluish-violet colour is produced. To another 1 ml of the filtrate add 2 drops of 10% sodium hydroxide solution, mix well, and add 0.5% cupric sulfate solution dropwise, a bluish-violet colour is produced.
(2) To 0.4 g of the powder add 5 ml of 70% ethanol, ultrasonicate for 15 minutes, filter, and use the filtrate as the test solution. Prepare a solution of 0.4 g of Cornu Cervi Pantotrichum reference drug in the same manner as the reference drug solution. Dissolve glycine CRS in 70% ethanol to produce a solution containing 2 mg per ml as the reference solution. Carry out the method for thin layer chromatography (Appendix VI B), using silica gel G mixed with carboxymethylcellulose sodium as the coating substance and a mixture of *n*-butanol, glacial acetic acid and water (3 : 1 : 1) as the mobile phase. Apply separately to the plate 8 μl of the test solution and the reference drug solution respectively, and 1 μl of the reference solution. After developing and removal of the plate, dry in air. Spray with 2% solution of ninhydrin in acetone and heat at 105℃ to the spots clear. The main spots in the chromatogram obtained with the test solution correspond in position and colour to the spots in the chromatogram obtained with the reference drug solution. The spot in the chromatogram obtained with the test solution corresponds in position and colour to the spot in

the chromatogram obtained with the reference solution.

Processing *Cornu Cervi Pantotrichum (sliced)* Burn away the soft hairs, scrape clean, wrap it with a clothing band, add hot white rice wine into the small holes on the cut surface until it is softened thoroughly or steam briefly after filled with wine, cut into thin slices, press, and dry.

Cornu Cervi Pantotrichum (powdered) Burn away the soft hairs, scrape clean, split into pieces and pulverize.

Action To reinforce *kidney-yang*, replenish vital essence and blood, and strengthen the tendons and bones, regulate thorouphfare and conception vessels, and promote the bursting of abscess and drainage of pus.

Indications Impotence, spermatorrhea, or frigidity and infertility; emaciation, lassitude, aversion to cold, dizziness, tinnitus, impairment of hearing, back pain accompanied with cold sensation, and weakness of the limbs; abnormal uterine bleeding and leukorrhea; chronic sores difficult to heal.

Usage and dosage 1-2 g ground into fine powder and taken liquid with it.

Storage Preserve in well closed containers, stored in a cool and dry place, protected from moth.

Cornu Saigae Tataricae (羚羊角, Lingyangjiao)

Antelope Horn

Antelope Horn is the horn of *Saiga tatarica* Linnaeus (Fam. Bovidae). The drug is sawed off from the animal, dried in the sun.

Description Elongated conical, somewhat arciform curved, 15-33 cm long; whitish or yellowish-white, basal part somewhat slaty. The younger branch smooth, with jade-like lustre, fine blood vessels or purplish-black patterns visible when seen against light, without crackles. The older branch with fine longitudinal crackles. The main part, except the pointed end, with 10-16 raised circular ridges, about 2 cm apart each other, when held with hand, four fingers just embeded in the sunken parts. Cross section of basal part rounded, 3-4 cm in diameter, with a hard, heavy bony core, commonly known as "Gusai" (bony plug). The bony core about one-half or one-third of the total length, the surface with raised longitudinal ridges inlaid closely with the depressed furrows of inner side of the horny sheath, the hinge serrated in cross section. The lower half of the horn hollow when the bony core removed. Whole horn translucent, the centre of the upper half with a faintly distinguishable thin canal leading directly to the apex when seen against light. The canal commonly known as "Tongtianyan" (the hole leading to the sky). Texture hard. Odour, slight; taste, weak.

Identification Transverse section: Somewhat undulated. The undulation most clear at the apex, usually with bundles in the peak, the bundles mostly triangular; the undulation somewhat clear in the middle portion, bundles mostly shaped like a double convex lens; the undulation indistinct in the basal portion, bundles elliptical to subrounded. Medullary cavities varying in size, 10-50 (80) μm in long diameter, largest in the basal part. Cortical cells of the bundles flattened shuttle shaped, in 3-5 layers. Interval between bundles relatively wide, filled with subisodiameteric polygonal, elongate rhombic or narrow elongated basic horny cells. Both of the cortical cells or basic horny cells colourless, transparent, without or only with a few minute pale grey pigment granules, with a strong refractive round granule or thread-like substance in the centre of the cell.

Processing *Cornu Saigae Tataricae (sliced)* Soak in warm water, take out, cut into thin slices, and dry.

Cornu Saigae Tataricae (powdered) Break, and pulverize to powder.

Action To remove *heat* from liver, arrest convulsion, improve vision, and remove toxic substances from blood.

Indications High fever with convulsion and impairment of consciousness; syncope, epilepsy, mamia; headache and dizziness; redness of the eye with corneal opacity; epidemic febrile diseases with eruption; carbuncles, abscesses and sores.

Usage and dosage 1-3 g, decocted alone over 2 hours; ground with liquid or ground into powder, 0.3-0.6 g each time.

Storage Preserve in a cool and dry place.

Cortex Acanthopanacis (五加皮, Wujiapi)

Slenderstyle Acanthopanax Bark

Slenderstyle Acanthopanax Bark is the dried root bark of *Acanthopanax gracilistylus* W. W. Smith (Fam. Araliaceae). The root is collected in summer and autumn, washed clean, the bark is stripped off, and dried in the sun.

Description Irregular quills, 5-15 cm long, 0.4-1.4 cm in diameter, about 2 mm thick. Outer surface greyish-brown, with slightly twisted longitudinal wrinkles and transverse lenticel-like scars; inner surface pale yellow or greyish-yellow, with fine longitudinal striations. Texture light, fragile, easily broken, fracture irregular, greyish-white. Odour, slightly aromatic; taste, slightly pungent and bitter.

Identification Transverse section: Cork cells several layers. Cortex narrow, scattered with a few secretory canals. Phloem broad, with clefts in the outer part, rays 1-5 cells wide; secretory canals fairly frequent, surrounded with 4-11 secretory cells. Parenchymatous cells containing clusters of calcium oxalate and small starch granules.
Powder: Greyish-white. Clusters of calcium oxalate 8-64 μm in diameter, sometimes the crystal cells linked together, with clusters arranged in rows. Cork cells rectangular or polygonal, thin-walled; sometimes the walls of cork cells of older root barks unevenly thickened, less pitted. Fragments of secretory canals containing colourless or pale yellow secretion. Starch granules abundant, simple granules polygonal or subspherical, 2-8 μm in diameter; compound granules consisting of 2 to tens of components.

Processing Eliminate foreign matter, wash clean, soften thoroughly, cut into thick slices, and dry in the sun.

Action To relieve rheumatic condition, and tonify the liver and the kindney, and strengthen the tendons and bones.

Indications Rheumatic or rheumatoid arthralgia with flaccidity of extremities; retarded walking and lack of strength in children; edema.

Usage and dosage 4.5-9 g.

Storage Preserve in a dry place, protected from mould and moth.

Cortex Ailanthi
(椿皮，Chunpi)

Tree-of-heaven Bark

Tree-of-heaven Bark is the dried root bark or stem bark of *Ailanthus altissima* (Mill.) Swingle (Fam. Simaroubaceae). The drug is collected all year round, dried in the sun or dried in the sun after removing the coarse bark.

Description Root bark: Irregular pieces or quills, varying in size, 0.3-1 cm thick. Outer surface greyish-yellow or yellowish-brown, rough, with numerous longitudinal lenticel-like prominences, and irregularly fissured transversely and longitudinally; outer surface of the drug free from rough bark, yellowish-white. Inner surface pale yellow, relatively even, densely covered with small spindle-shaped holes or spots. Texture hard and fragile; fracture granular at the outer part, fibrous at the inner part. Odour, slight; taste, bitter.

Stem bark: Irregular plates or pieces, varying in size, 0.5-2 cm thick. Outer surface greyish-black, very rough and deeply fissured.

Identification (1) Powder of root bark: Pale greyish-yellow. Stone cells numerous, subrounded, subsquare or irregular, 24-96 μm in diameter, walls thickened, or thicker on three sides and thinner on one side, some containing prisms of calcium oxalate. Fibres 20-40 μm in diameter, walls extremely thickened and lignified. Prisms of calcium oxalate 11-48 μm in diameter; clusters up to 48 μm in diameter. Starch granules subspherical or ovoid, 3-13 μm in diameter.

Powder of stem bark: Greyish-yellow. Fragments of cork cells numerous, clusters of calcium oxalate occasionally present, starch granules absent.

(2) To 2 g of the powder add 20 ml of ether, ultrasonicate for 15 minutes, filter, expel the filtrate to dryness. dissolve the residue in 1 ml of ethanol as the test solution. Prepare a solution with 2 g of Cortex Ailanthi reference drug in the same manner as the reference drug solution. Carry out the method for thin layer chromatography (Appendix Ⅵ B), using silica gel G as the coating substance and a mixture of petroleum ether (60-90℃) and ethyl acetate (4 : 1) as the mobile phase. Apply separately to the plate 10 μl of each of the above two solutions. After developing and removal of the plate, dry in air, and examine under ultraviolet light at 365 nm. The fluorescent spots in the chromatogram obtained with the test solution correspond in position and colour to the spots in the chromatogram obtained with the reference drug solution.

Water Not more than 13.0 per cent (Appendix Ⅸ H, method 1).

Total ash Not more than 11.0 per cent (Appendix Ⅸ K).

Acid-insoluble ash Not more than 1.0 per cent (Appendix Ⅸ K).

Extractives Carry out the method for determination of ethanol-soluble extractives (Appendix Ⅹ A, the hot extraction method), using dilute ethanol TS as the solvent, not less than 5.0 per cent.

Processing *Cortex Ailanthi* Eliminate foreign matter, wash clean, soften thoroughly, cut into slivers or sections, and dry.

Cortex Ailanthi (*stir-baked with bran*) Stir-bake the slivers of Cortex Ailanthi as described under the method for stir-baking with bran (Appendix Ⅱ D) until a slightly yellow colour is produced.

Action To remove *damp-heat* and arrest discharge (leukorrhea, diarrhea and hemorrhage).

Indications Morbid leukorrhea; diarrhea caused by *damp-heat*; chronic diarrhea, chronic dysentery; hematochezia, abnormal uterine bleeding.

Usage and dosage 6-9 g.

Storage Preserve in a ventilated and dry place, protected from moth.

Cortex Albiziae
(合欢皮，Hehuanpi)

Silktree Albizia Bark

Silktree Albizia Bark is the dried stem bark of *Albizia julibrissin* Durazz. (Fam. Leguminosae). The drug is collected in summer and autumn, and dried in the sun.

Description Quilled or semi-quilled, 40-80 cm long, 1-3 mm thick. Outer surface greyish-brown, somewhat longitudinally wrinkled, some shallowly fissured, with dense and distinct transversal elliptical lenticels, brown or brownish-red, occasionally showing prominent transversal ribs or some large rounded branch scars, and often covered with patches of lichens; inner surface pale yellowish-brown or yellowish-white, smooth, with fine and dense longitudinal striations. Texture hard and fragile, easily broken, fracture fibrously laminated, pale yellowish-brown or yellowish-white. Odour, slightly aromatic; taste, weak, slightly astringent and slightly irritating, with a disagreeable sensation in the throat afterwards.

Identification (1) Powder: Greyish-yellow. Stone cells suboblong, subrounded, rectangular, slat-shaped or irregular, 16-58 μm in diameter, walls relatively thickened, pit canals distinct, some branched. Fibres slender, 7-22 μm in diameter, usually in bundles, surrounded by parenchymatous cells containing prisms of calcium oxalate, forming crystal fibres, the walls of cells containing crystals unevenly thickened, lignified or slightly lignified. Prisms of calcium oxalate 5-26 μm in diameter. Parenchymatous cells of phloem relatively small, walls slightly thickened with rounded pits in radial sectional view, some aggregated to pit groups; the walls somewhat beaded in tangential sectional view.

(2) To 1 g of the powder add 30 ml of methanol, ultrasonicate for 30 minutes, filter, and evaporate the filtrate to dryness. Dissolve the residue in dehydrated ethanol as the test solution. Prepare a solution, with 1 g of Cortex Albiziae reference drug in the same manner as the reference drug solution. Carry out the method for thin layer chromatography (Appendix Ⅵ B), using silica gel G mixed with sodium carboxymethylcellulose as the coating substance and a mixture of chloroform, methanol and formic acid (6 : 0.5 : 0.1) as the mobile phase. Apply separately to the plate 3 μl of each of the above two solutions. After developing and removal of the plate, dry in air, and expose to iodine vapour to the spots clear. The spots in the chromatogram obtained with the test solution correspond in position and colour to the spots in the chromatogram obtained with the reference drug solution.

Water Not more than 10.0 per cent (Appendix Ⅸ H, method 1).

Total ash Not more than 6.0 per cent (Appendix Ⅸ K).

Acid-insoluble ash Not more than 1.0 per cent (Appendix Ⅸ K).

Extractives Carry out the method for determination of ethanol-soluble extractives (Appendix Ⅹ A, the hot extraction method), using dilute ethanol TS as the solvent, not less than 12.0 per cent.

Processing Eliminate foreign matter, wash clean, soften thoroughly, cut into slivers or pieces, and dry.

Action To ease the mind and indue tranquillization, and cause subsidence of swelling by activating blood circulation.

Indications Distractibility, melancholy and insomnia; lung abscess; sores and traumatic injuries.

Usage and dosage 6-12 g; for external use, appropriate quantity is ground into powder, mixed with liquid and applied topically.

Storage Preserve in a ventilated and dry place.

Cortex Cinnamomi (肉桂, Rougui)

Cassia Bark

Cassia Bark is the dried stem bark of *Cinnamomum cassia* Presl (Fam. Lauraceae). The drug is frequently collected in autumn, and dried in the shade.

Description Channelled or quilled, 30-40 cm long, 3-10 cm wide or in diameter, 2-8 mm thick. Outer surface greyish-brown, slightly rough, with irregular fine wrinkles and transverse protruding lenticels, some showing greyish-white streaks; inner surface reddish-brown, somewhat even, with fine longitudinal striations and exhibiting oily trace on scratching. Texture hard and fragile, easily broken, fracture uneven, outer layer brown and relatively rough, inner layer reddish-brown and oily, showing a yellowish-brown line between two layers. Odour, strongly aromatic; taste, sweet and pungent.

Identification (1) Transverse section: Cork cells several layers, the innermost layer of cells with thickened and lignified outer walls. Cortex scattered with stone cells and secretory cells. Pericycle stone cells in groups arranged in an interrupted ring, accompanied by fibre bundles at outer side, the outer walls of stone cells usually thinner. Phloem rays 1-2 cells wide, containing minute needle crystals of calcium oxalate; fibres usually 2-3 in bundles; oil cells scattered throughout. Parenchymatous cells containing starch granules.
Powder: Reddish-brown. Most of fibres singly scattered, long fusiform, 195-920 μm long, up to 50 μm in diameter, walls thickened and lignified, pits indistinct. Stone cells subsquare or subrounded, 32-88 μm in diameter, walls thickened, some thin at one side. Oil cells subrounded or oblong, 45-108 μm in diameter. Needle crystals minute, scattered in ray cells. Cork cells polygonal, containing reddish-brown contents.
(2) Macerate 0.5 g of the powder with 10 ml of ethanol for 20 minutes with frequent shaking in a stopper flask and filter, use the filtrate as the test solution. Dissolve cinnamic aldehyde CRS in ethanol to prepare a solution containing 1 μl per ml as the reference solution. Carry out the method for thin layer chromatography (Appendix Ⅵ B), using silica gel G-as the coating substance, and a mixture of petroleum ether (60-90℃) and ethyl acetate (17 : 3) as the mobile phase. Apply separately to the plate 2-5 μl of the test solution and 2 μl of the reference solution. After developing and removal of the plate, dry in air, spray with ethanolic 2,4-dinitrophenylhydrazine TS. The spot in the chromatogram obtained with the test solution corresponds in position and colour to the spot in the chromatogram obtained with the reference solution.

Water Not more than 15.0 per cent (Appendix Ⅸ H, method 2).

Total ash Not more than 5.0 per cent (Appendix Ⅸ K).

Assay ***Volatile oil*** Carry out the method for determination of volatile oil (Appendix Ⅹ D, method B).
It contains not less than 1.2 per cent (ml/g) of volatile oil.

Cinnamic aldehyde Carry out the method for high performance liquid chromatography (Appendix Ⅵ D).

Chromatographic system and system suitability Use octadecylsilane bonded silica gel as the stationary phase and a mixture of acetonitrile and water (35 : 75) as the mobile phase. As detector a spectrophotometer set at 290 nm. The number of theoretical plates of the column is not less than 3000, calculated with reference to the peak of cinnamic aldehyde.

Reference solution Dissolve a quantity of cinnamic aldehyde CRS, weighed accurately, in methanol to prepare a solution containing 10 μg per ml.

Test solution Weigh accurately 0.5 g of the powder (through No. 3 sieve) in a stopper conical flask, add accurately 25 ml of methanol, weigh, ultrasonicate (power 350 W, frequency 35 kHz) for 10 minutes, stand overnight, ultrasonicate in the same manner, weigh again, compensate the loss of the weight with methanol, mix well and filter. Measure accurately 1 ml of the successive filtrate in a 25 ml volumetric flask, add methanol to volume, and mix well.

Procedure Inject accurately 10 μl of each of the reference solution and the test solution, respectively, into the column, and calculate the content.
It contains not less than 1.5 per cent of cinnamic aldehyde (C_9H_8O), calculated with reference to the dried drug.

Processing Eliminate foreign matter and rough bark. Pound to pieces before use.

Action To reinforce *yang*, and lead the *fire* back to the kidney, dispel *cold* and relieve pain, and activate blood circulation and stimulate menstrual discharge.

Indications Impotence, frigidity, feeling of cold and pain in the loins and knees; dyspnea in deficiency of the kidney; dizziness, inflammation of the eyes and sore throat due to *yang-deficiency*; precordial and abdominal pain with cold sensation, vomiting and diarrhea in *deficiency-cold* syndrome; neurosis with a feeling of gas rushing up through the chest to the throat from the lower abdomen; amenorrhea, dysmenorrhea.

Usage and dosage 1-4.5 g.

Precaution Used with caution in the patients with bleeding tendency or pregnancy. Incompatible with Halloysitum Rubrum.

Storage Preserve in a cool and dry place.

Cortex Dictamni (白鲜皮, Baixianpi)

Densefruit Pittany Root-bark

Densefruit Pittany Root-bark is the dried root bark of

Dictamnus dasycarpus Turcz. (Fam. Rutaceae). The root is collected in spring and autumn, removed from soil and rough bark. The root bark is stripped off and dried.

Description Quilled, 5-15 cm long, 1-2 cm in diameter, 2-5 mm thick. Outer surface greyish-white or pale greyish-yellow, with fine longitudinal wrinkles and rootlet scars, frequently with small protruding granular dots; inner surface almost white, with fine longitudinal striations. Texture fragile, dusting on breaking, fracture uneven and somewhat lamellar, when outer layer peeled off, numerous glittering small spots observed on exposing to light. Odour, muttony; taste, slightly bitter.

Identification (1) Transverse section: Cork cells 10 or more layers. Cortex narrow, fibres mostly scattered singly, yellow, 25-100 μm in diameter, walls thickened and obviously striated. Phloem broad, rays 1-3 cells wide; fibres singly scattered. Parenchyma containing abundant clusters of calcium oxalate, 5-30 μm in diameter.
(2) To 1 g of the powder add 50 ml of ethanol, ultrasonicate for 30 minutes, filter, evaporate the filtrate to dryness. dissolve the residue in 1 ml of methanol as the test solution. Prepare a solution with 1 g of Cortex Dictamni reference drug in the same manner as the reference drug solution. Dissolve fraxinellon in methanol to prepare a solution containing 1 mg per ml as the reference solution. Carry out the method for thin layer chromatography (Appendix Ⅵ B), using silica gel G as the coating substance and a mixture of petroleum ether (60-90℃) and ethyl acetate (10 : 1) as the mobile phase. Apply separately to the plate 5 μl of each of the above three solutions. After developing and removal of the plate, dry in air. Spray with 10% sulfuric acid in ethanol, heat at 105℃ to the spots clear. The spots in the chromatogram obtained with the test solution correspond in position and colour to the spots in the chromatogram obtained with the reference drug solution and the reference solution.

Water Not more than 14.0 per cent (Appendix Ⅸ H, method 1).

Acid-insoluble ash Not more than 1.0 per cent (Appendix Ⅸ K).

Extractives Carry out the method for determination of water-soluble extractives (Appendix Ⅹ A, the cold maceration method), not less than 20.0 per cent.

Assay Carry out the method for high performance liquid chromatography (Appendix Ⅵ D).

Chromatographic system and system suitability Use octadecylsilane bonded silica gel as the stationary phase and a mixture of methanol and water (62 : 38) as the mobile phase. As detector a spectrophotometer set at 218 nm. The number of theoretical plates of the column is not less than 3000, calculated with reference to the peak of fraxinellon.

Reference solution Dissolve a quantity of fraxinellon CRS, weighed accurately, in methanol to prepare a solution containing 60 μg per ml.

Test solution Weigh accurately 0.5 g of the coarse powder (dried at 60℃, through No. 4 sieve) to a flat-bottomed flask, add 50 ml of ethanol, ultrasonicate (power 220 W, frequency 50 kHz) for 30 minutes, filter. Add 50 ml of ethanol to the residue, ultrasonicate again, and filter. Combine the filtrates, recover ethanol in vaccum, dissolve the residue in methanol and transfer to a 5 ml volumetric flask, add methanol to volume, mix well.

Procedure Inject accurately 20 μl of each of the reference solution and the test solution, respectively, into the column, and calculate the content.
It contains not less than 0.030 per cent of fraxinellon ($C_{12}H_{14}O_3$), calculated with reference to the dried drug.

Processing Eliminate foreign matter, wash clean, soften briefly, cut into thick slices, and dry.

Action To remove *damp-heat* and *toxicity* and dispel *wind*.

Indications Skin inflammation with yellowish watery discharge, eczema, rubella, tinea, scabies; acute rheumatic arthritis; jaundice with dark urine.

Usage and dosage 4.5-9 g; for external use, appropriate quantity is decocted for washing or ground into powder for topical application.

Storage Preserve in a ventilated and dry place.

Cortex Eucommiae (杜仲, Duzhong)

Eucommia Bark

Eucommia Bark is the dried stem bark of *Eucommia ulmoides* Oliv. (Fam. Eucom-miaceae). The drug is collected from April to June, removed from the coarse bark, piled up until the inner surface becomes purplish-brown, and dried in the sun.

Description Flat pieces, or two edges somewhat curved inwards, varying in size, 3-7 mm thick. Outer surface pale brown or greyish-brown, markedly wrinkled or fissured and channelled longitudinally; some barks relatively thin, showing distinct lenticels when the coarse bark unscraped; inner surface dark purple, smooth. Texture fragile, easily broken, fracture linked up by fine, dense, silvery and elastic rubber threads. Odour, slight; taste, slightly bitter.

Identification (1) Powder: Brown. Rubber threads stripe-shaped or twisted into masses, surface granular. Stone cells numerous, mostly in groups, subrectangular, subrounded, elongated-rectangular or irregular, 20-80 μm in diameter, up to 180 μm long, thick-walled, some containing rubber masses. Cork cells polygonal in surface view, 15-40 μm in diameter, with unevenly thickened, lignified and finely pitted walls; rectangular in lateral view, walls thickened on three sides and relatively thin on one side, pit canals distinct.
(2) Macerate 1 g of the powder in 10 ml of chloroform for 2 hours and filter. Evaporate the filtrate to dryness, add 1 ml of ethanol; an elastic film is produced.

Extractives Carry out the method for determination of ethanol-soluble extractives (Appendix Ⅹ A, the hot extraction method), using 75% ethanol as the solvent, not less than 11.0 per cent.

Assay Carry out the method for high performance liquid chromatography (Appendix Ⅵ D).

Chromatographic system and system suitability Use octadecyl-silane bonded silica gel as the stationary phase and a mixture of methanol and water (25 : 75) as the mobile phase. As detector a spectrophotometer set at 277 nm. The number of the theoretical plates of the column is not less than 1000, calculated with reference to the peak of pinoresinol diglu-coside.

Reference solution Dissolve a quantity of pinoresinol diglucoside CRS, accurately weighed, in methanol to produce a solution containing 0.5 mg per ml, and mix well.

Test solution Take about 3 g of the drug, cut into pieces

and knead into flock. Transfer 2 g, accurately weighed, to a Soxhlet's extractor, add a quantity of chloroform, and heat under reflux for 6 hours. Discard the chloroform solution, expel chloroform of the residue, and transfer again to a Soxhlet's extractor, add a quantity of methanol and heat under reflux for 6 hours. Concentrate the methanol extract to an appropriate volume, then transfer to a 10 ml volumetric flask, add methanol to volume, shake well, and filter.

Procedure Inject accurately 10 μl of each of the reference solution and the test solution, respectively, into the column, and calculate the content.
It contains not less than 0.10 per cent of pinoresinol diglucoside ($C_{32}H_{42}O_{16}$).

Processing *Cortex Eucommiae* Scrap off the remains of coarse bark, wash clean, cut into pieces or slivers, and dry.

Cortex Eucommiae (processed with salt) Stir-bake the pieces or slivers of Cortex Eucommiae as described under the method for stir-baking with salt-water (Appendix Ⅱ D) until the rubber threads broken off and the surface charred. Pieces or slivers, externally charred. Elasticity of the rubber threads weak when broken. Taste, slight salty. Perform the determination of extractives in the same manner as described above, not less than 12.0 per cent.

Action To tonify the liver and the kidney, to strengthen the tendons and bones, and prevent miscarriage.

Indications Deficiency condition of the kidney marked by lumbago and lack of strength; threatened abortion; hypertension.

Usage and dosage 6-9 g.

Storage Perserve in a ventilated and dry place.

Cortex Fraxini
(秦皮, Qinpi)

Ash Bark

Ash Bark is the dried branch bark or stem bark of *Fraxinus rhynchophylla* Hance, *Fraxinus chinen-sis* Roxb., *Fraxinus szaboana* Lingelsh. or *Fraxinus stylosa* Lingelsh. (Fam. Oleanaceae). The drug is collected in spring and autumn, dried in the sun.

Description *Branch bark* Quilled or channelled, 10-60 cm long, 1.5-3 mm thick. Outer surface greyish-white, greyish-brown to blackish-brown, or alternated in patches, even or slightly rough, with greyish-white and rounded dotted lenticels, and fine oblique wrinkles, some with branch scars; inner surface yellowish-white or brown, smooth. Texture hard and fragile, fracture fibrous, yellowish-white. Odour, slight; taste, bitter.

Stem bark Slat pieces, 3-6 mm thick. Outer surface greyish-brown, with rimose furrows and reddish-brown rounded or transversal lenticels. Texture hard, fracture relatively fibrous.

Identification (1) Macerate the drug in hot water, the extract shows a bright blue fluorescence in daylight.
(2) Transverse section: Cork cells 5-10 layers. Phelloderm consisting of several layers of polygonal collenchymatous cells. Cortex relatively wide, fibres and stone cells scattered singly or in groups. The annular band composed of stone cells and fibre bundles occurring in pericycle, occasionally interrupted. Phloem rays 1-3 cells wide; fibre bundles and some stone cells arranged in layers, intercrossed with rays in "#" shape. Parenchymatous cells containing sandy crystals of calcium oxalate.
(3) Heat under reflux 1 g of the powder with 10 ml of methanol for 10 minutes, cool, filter and use the filtrate as the test solution. Dissolve aesculin CRS, aesculetin CRS and fraxetin CRS in methanol to produce a mixture containing 2 mg of each per ml as the reference solution. Carry out the method for thin layer chromatography (Appendix Ⅵ B), using silica gel GF_{254} as the coating substance and a mixture of chloroform, methanol and formic acid (6 : 1 : 0.5) as the mobile phase. Apply separately to the plate 10 μl of each of the above two solutions. After developing and removal of the plate, dry in air, and examine under ultraviolet light at 365 nm. The spots in the chromatogram obtained with the test solution correspond in position and colour to the spots in the chromatogram obtained with the reference solution; spray with a mixture of ferric chloride TS and potassium ferricyanide TS (1 : 1), the spots turn dark blue.

Water Not more than 7.0 per cent (Appendix Ⅸ H, method 1).

Total ash Not more than 8.0 per cent (Appendix Ⅸ K).

Extractives Carry out the method for determination of ethanol-soluble extractives (Appendix Ⅹ A, the hot extraction method), using ethanol as the solvent, not less than 8.0 per cent.

Assay Carry out the method for high performance liquid chromatography (Appendix Ⅵ D).

Chromatographic system and system suitability Use octadecylsilane bonded silica gel as the stationary phase and a mixture of acetonitrile and 0.1% phosphoric acid (12 : 88) as the mobile phase. As detector a spectrophotometer set at 334 nm. The number of theoretical plates of the column is not less than 5000, calculated with reference to the peak of aesculetin.

Reference solution Weigh accurately 10 mg of each of aesculin CRS and aesculetin CRS, dried to constant weight at 80℃, in a 50 ml volumetric flask, add separately methanol to dissolve and dilute to volume, mix well. Measure accurately 5 ml of aesculin, 3 ml of aesculetin to a 10 ml volumetric flask separately, add methanol to volume, and mix well (aesculin: 0.1 mg per ml; aesculetin: 60 μg per ml).

Test solution Weigh accurately 0.5 g of the powder (through No. 3 sieve) in a stopper conical flask, add accurately 50 ml of methanol, weigh, heat under on a water bath for 60 minutes, cool, weigh again, compensate the loss of the weight with methanol, mix well, filter through microporous filter membrane (0.45 μm), and use the successive filtrate.

Procedure Inject accurately 10 μl of each of the reference solution and the test solution, respectively, into the column, and calculate the content.
It contains not less than 1.0 per cent of the total amount of aesculin ($C_{15}H_{16}O_9$), and aesculetin ($C_9H_6O_4$), calculated with reference to the dried drug.

Processing Eliminate foreign matter, wash clean, soften thoroughly, cut into slices, and dry in the sun.

Action To remove *damp-heat*, arrest discharge, and improve eyesight.

Indications Acute dysentery and diarrhea; morbid leukorrhea; inflammation of the eyes; nebula.

Usage and dosage 6-12 g; for external use, appropriate quantity is decocted for washing.

Storage Preserve in a ventilated and dry place.

Cortex Illicii
(地枫皮, Difengpi)

Difengpi Bark

Difengpi Bark is the dried stem bark of *Illicium difengpi* K. I. B. et K. I. M. (Fam. Magnoliaceae). The drug is collected in spring and autumn, and dried in the sun or at a low temperature.

Description Quilled or channelled, 5-15 cm long, 1-4 cm in diameter, 2-3 mm thick. Outer surface greyish-brown to dark-brown, some showing greyish-white patches of lichens, coarse bark easily exfoliated or fallen off, the exposed layer brownish-red. Inner surface brown or brownish-red, with distinct fine longitudinal wrinkles. Texture lax and fragile, easily broken, fracture granular. Odour, slightly aromatic; taste, slightly astringent.

Identification (1) Transverse section: Cork consisting of several layers of cells, the inner walls relatively thickened, containing reddish-brown substances. Cortex scattered with groups of stone cells, parquet with a few fibre bundles; secretory cells present. Phloem rays 1 cell wide, also occurring secretory cells, but smaller than those in cortex. Parenchymatous cells containing reddish-brown substances and starch granules.
(2) To 2 g of the coarse powder add 5 ml of chloroform, shake, macerate for 30 minutes, and filter. Spot the filtrate to filter paper. After drying, examine under ultraviolet at light 254 nm, a scarlet to pale scarlet fluorescence is produced.

Processing Eliminate foreign matter, wash clean, break to pieces, and dry in the sun.

Action To relieve rheumatic condition, and promote the flow of *qi* and relieve pain.

Indications Rheumatic arthralgia, lumbar muscle strain.

Usage and dosage 6-9 g.

Storage Preserve in a dry place.

Cortex Lycii
(地骨皮, Digupi)

Chinese Wolfberry Root-bark

Chinese Wolfberry Root-bark is the dried root bark of *Lycium chinense* Mill. or *Lycium barbarum* L. (Fam. Solanaceae). The root is collected in early spring or late autumn, and washed clean. Then the root bark is stripped off, and dried in the sun.

Description Quilled or channelled, 3-10 cm long, 0.5-1.5 cm wide, 1-3 mm thick. Outer surface greyish-yellow to brownish-yellow, rough, with irregular longitudinal fissures, easily exfoliated. Inner surface yellowish-white to greyish-yellow, relatively even, with fine longitudinal striations. Texture light and fragile, easily broken, fracture uneven, outer layers yellowish-brown and inner layers greyish-white. Odour, slight; taste, sweetish and then bitter.

Identification Transverse section: Cork consisting of 4-10 or more layers of cells, with relatively thick rhytidome outside. Most phloem rays 1 cell wide; fibres singly scattered, or 2 to several in bundles. Parenchymatous cells containing sandy crystals of calcium oxalate and numerous starch granules.

Total ash Not more than 11.0 per cent (Appendix Ⅸ K).

Processing Eliminate foreign matter and the remains of wood, wash clean, and dry in the sun.

Action To reduce *heat* in blood, relieve consumptive fever, and remove *heat* from the lung.

Indications Afternoon fever and night sweating in consumptive diseases; cough, hemoptysis and epistaxis due to *heat* in the lung; wasting-thirst caused by internal *heat*.

Usage and dosage 9-15 g.

Storage Preserve in a dry place.

Cortex Magnoliae Officinalis
(厚朴, Houpo)

Officinal Magnolia Bark

Officinal Magnolia Bark is the dried stem bark, root bark or branch bark of *Magnolia officinalis* Rehd. et Wils. or *Magnolia officinalis* Rehd. et Wils. var. *biloba* Rehd. et Wils. (Fam. Magnoliaceae). The drug is collected from April to June. The root bark and the branch bark are dried in the shade. The stem bark is slightly decocted in boiling water and piled up in a wet place until its inner surface purplish-brown or dark brown, softened by steaming, rolled and dried.

Description *Stem bark* Quilled singly or double quilled, 30-35 cm long, 2-7 mm thick, commonly known as "Tongpo"; stem bark near the root with one end spread out like a bell, 13-25 cm long, 3-8 mm thick, commonly known as "Xuetongpo". Outer surface greyish-brown, rough, sometimes scaly, easily exfoliated, with distinct elliptical lenticels and longitudinal wrinkles, appearing yellowish-brown when the coarse bark peeled; inner surface purplish-brown or dark purplish-brown, relatively smooth, with fine and dense longitudinal striations and exhibiting oily trace on scratching. Texture hard, uneasily broken, fracture granular, greyish-brown in the outer layer and purplish-brown or brown in the inner layer, oily, sometimes numerous small bright spots visible. Odour, aromatic; taste, pungent and slightly bitter.

Root bark (*Genpo*) Quilled singly or pieced irregularly, some curved like chicken intestines, commonly known as "Jichangpo". Texture hard, easily broken, fracture fibrous.

Branch bark (*Zhipo*) Quilled singly, 10-20 cm long, 1-2 mm thick. Texture fragile, easily broken, fracture fibrous.

Identification (1) Transverse section: Cork consisting of over 10 layers of cells, sometimes rhytidome observed. The outer side of cortex showing a ring of stone cells and the inner side scattered with numerous oil cells and groups of stone cells. Phloem rays 1-3 cells wide; fibres mostly several in bundles; oil cells scattered.
Powder: Brown. Fibres numerous, 15-32 μm in diameter, walls strongly thickened, sometimes undulate or serrate at one side, lignified, pit canals indistinct. Stone cells subsquare, elliptical, ovate, or irregularly branched, 11-65 μm in diameter, sometimes striations visible. Oil cells elliptical or subrounded, 50-85 μm in diameter, containing yellowish-brown oily contents.
(2) To 0.5 g of the powder add 5 ml of methanol, stopper

well, shake for 30 minutes, filter and use the filtrate as the test solution. Dissolve magnolol CRS and honokiol CRS in methanol to produce a mixture containing 1 mg of each per ml as the reference solution. Carry out the method for thin layer chromatography (Appendix Ⅵ B), using silica gel G as the coating substance and a mixture of benzene and methanol (27 : 1) as the mobile phase. Apply separately to the plate 5 μl of each of the above two solutions. After developing and removal of the plate, dry in air. Spray with a 1% solution of vanillin in sulfuric acid, heat at 100℃ to the spots clear. The spots in the chromatogram obtained with the test solution correspond in position and colour to the spots in the chromatogram obtained with the reference solution.

Assay Carry out the method for high performance liquid chromatography (Appendix Ⅵ D).

Chromatographic system and system suitability Use octadecylsilane bonded silica gel as the stationary phase and a mixture of methanol and water (78 : 22) as the mobile phase. As detector a spectrophotometer set at 294 nm. The number of the theoretical plates of the column is not less than 3800, calculated with reference to the peak of magnolol.

Reference solution Weigh accurately a quantity of magnolol CRS and honokiol CRS, add methanol to produce two solutions containing 40 μg of magnolol and 24 μg of honokiol per ml respectively.

Test solution Weigh accurately 0.2 g of the powder (through No. 3 sieve) in a stopper conical flask, accurately add 25 ml of methanol, shake well, stopper tightly, macerate for 24 hours, and filter. Measure accurately 5 ml of the successive filtrate to a 25 ml volumetric flask, add methanol to volume, mix well as the test solution.

Procedure Inject accurately 4 μl of each of the above two reference solutions respectively, and 3-5 μl of the test solution into the column, and calculate the content.
It contains not less than 2.0 per cent of the total amount of magnolol ($C_{18}H_{18}O_2$) and honokiol ($C_{18}H_{18}O_2$), calculated with reference to the dried drug.

Processing *Cortex Magnoliae officinalis* Scrape off the coarse bark, wash clean, soften thoroughly, cut into slivers, and dry in the sun.
The slivers curved, fracture fibrous, outer surface yellowish-brown, inner surface dark purplish-brown.

Cortex Magnoliae officinalis (baked with ginger) Stir-bake the slivers of Cortex Magnoliae Officinalis as described under the method for stir-baking with ginger juice (Appendix Ⅱ D) to dryness.
The slivers curved, fracture fibrous and purplish-brown.

Action To eliminate *damp* and relieve distension.

Indications Accumulation of *damp* in the spleen and the stomach marked by epigastric stuffiness, vomiting and diarrhea; abdominal distension and constipation due to retention of undigested food; cough and dyspnea caused by retained *damp*.

Usage and dosage 3-9 g.

Storage Preserve in a ventilated and dry place.

Cortex Meliae
(苦楝皮, Kulianpi)

Szechwan Chinaberry Bark

Szechwan Chinaberry Bark is the dried stem bark or root bark of *Melia toosendan* Sieb. et Zucc. or *Melia azedarach* L. (Fam. Meliaceae). The drug is collected in spring and autumn, dried in the sun or dried in the sun after removal of the coarse bark.

Description Irregularly tabular, channelled or semiquilled, varying in length and width, 2-6 mm thick. Outer surface greyish-brown, rough, with interwoven longitudinal wrinkles and greyish-brown dotted lenticels, pale yellow when the coarse bark is peeled; inner surface almost white or pale yollow. Texture flexible, uneasily broken, fracture fibrous, laminated, easily separated. Odour, slight; taste, bitter.

Identification (1) Choose a section of the drug, fold and rub with hands, it may be laminated, the lamination appearing alternately yellow and white layers, each lamina minutely reticulated.
(2) Macerate about 1 g of the powder with 10 ml of ether for 2 hours with frequent shaking, and filter. Evaporate 1 ml of the filtrate to dryness, add several drops of *p*-dimethylaminobenzaldehyde TS; a red colour is produced. Evaporate another 1 ml of the filtrate to dryness in a test tube, add 1 ml of acetic anhydride, stir, add several drops of sulfuric acid along the tube wall; a green colour in acetic anhydride layer and a red to purplish-red colour in sulfuric acid layer are produced.
(3) To 2 g of the powder add 25 ml of acetone, ultrasonicate for 25 minutes, filter and evaporate the filtrate to dryness. Dissolve the residue in 1 ml of methanol as the test solution. Prepare a solution with 2 g of Cortex Meliae reference drug in the same manner as the reference drug solution. Carry out the method for thin layer chromatography (Appendix Ⅵ B), using silica gel G as the coating substance and a mixture of benzene and acetone (40 : 1) as the mobile phase. Apply separately to the plate 5 μl of each of the above two solutions. After developing and removal of the plate, dry in air and examine under ultraviolet light at 365 nm. The fluorescent spots in the chromatogram obtained with the test solution correspond in position and colour to the spots in the chromatogram obtained with the reference drug solution.

Processing Eliminate foreign matter, wash clean, soften thoroughly, cut into slivers, and dry.

Action To repel worms and cure dermatosis.

Indications Ascariasis, oxyuriosis, abdominal pain due to intestinal parasitosis. External use for scabies and tinea.

Usage and dosage 4.5-9 g; for external use, appropriate quantity is ground into powder and applied topically after mixed with lard.

Precaution Used with caution in the patients with hepatitis or nephritis.

Storage Preserve in a ventilated and dry place, protected from moisture.

Cortex Mori
(桑白皮, Sangbaipi)

White Mulberry Root-bark

White Mulberry Root-bark is the dried root bark of *Morus alba* L. (Fam. Moraceae). The root is collected in late autumn while leaf falling off and in early spring before germination, removed from the yellowish-brown coarse bark, cut longi-tudinally. The root bark is stripped off, and dried in the sun.

Description Quilled, channelled or flat pieced, twisted, varying in length and width, 1-4 mm thick. Outer surface white or pale yellowish-white, relatively even, some with orange-yellow or brownish-yellow remains of scaly bark; inner surface yellowish-white or greyish-yellow, with fine longitudinal striations. Texture light and tenacious, strongly fibrous, uneasily broken, but easily stripped longitudinally, dusting on stripping. Odour, slight; taste, slightly sweet.

Identification (1) Transverse section: Phloem rays 2-6 cells wide; laticiferous tubes scattered; fibres scattered singly or in bundles, unlignified or slightly lignified; parenchymatous cells containing starch granules, some containing prisms of calcium oxalate. The groups of sclerenchymatous cells mixed with stone cells, scattered in the older root bark, most cells containing prisms.
Powder: Pale greyish-yellow. Fibres numerous, mostly broken, 13-26 μm in diameter, walls thickened, unlignified to slightly lignified. Prisms of calcium oxalate 11-32 μm in diameter. Stone cells subrounded, subsquare or irregular, 22-52 μm in diameter, walls relatively thickened or extremely thickened, with distinct pits and pit-canals, some containing prisms. Crystal-containing sclerenchymatous cells present. Starch granules numerous, subrounded, 4-16 μm in diameter.
(2) To 2 g of the powder add 20 ml of saturated sodium carbonate solution, ultrasonicate for 20 minutes, filter and adjust the pH value of the filtrate to 1-2 with dilute hydrochloric acid, allow to stand for 30 minutes, and filter. Extract the filtrate with two 10-ml quantities of ethyl acetate, combine the ethyl acetate extracts and evaporate to dryness. Dissolve the residue in 1 ml of methanol as the test solution. Prepare a solution with 2 g of Cortex Mori reference drug in the same manner as the reference drug solution. Carry out the method for thin layer chromatography (Appendix Ⅵ B), using polyamide as the coating substance and acetic acid as the mobile phase. Apply separately to the film 5 μl of each of the above two solutions. After developing (about 10 cm) and removal of the film, dry in air and examine under ultraviolet light at 365 nm. Two main fluorescent spots in the chromatogram obtained with the test solution correspond in position and colour to the spots in the chromatogram obtained with the reference drug solution.

Processing *Cortex Mori* Wash clean, soften briefly, cut into slivers, and dry.

Cortex Mori (*processed with honey*) Stir-bake the slivers of Cortex Mori as described under the method for stir-baking with honey (Appendix Ⅱ D) until it is no more sticky to fingers.

Action To remove *heat* from the lung, relieve asthma, and induce urination.

Indications Cough and asthma caused by *heat* in the lung; anasarca with oliguria.

Usage and dosage 6-12 g.

Storage Preserve in a ventilated and dry place, protected from moisture and moth.

Cortex Moutan
(牡丹皮, Mudanpi)

Tree Peony Bark

Tree Peony Bark is the dried root bark of *Paeonia suffruticosa* Andr. (Fam. Ranunculaceae). The root is collected in autumn, removed from rootlets and soil, the root bark is stripped off, and dried in the sun.

Description Quilled or semiquilled, longitudinally fissured, somewhat involute or opened, 5-20 cm long, 5-12 mm in diameter, 1-4 mm thick. Outer surface greyish-brown or yellowish-brown, showing numerous transverse lenticel-like prominences and rootlet scars, the exposed surface where cork fallen off appearing pink; inner surface pale greyish-yellow or pale brown, with obvious fine longitudinal striations, usually showing bright crystals. Texture hard and fragile, easily broken, fracture relatively even, mealy, pale pink. Odour, aromatic; taste, slightly bitter and astringent.

Identification (1) Powder: Pale reddish-brown. Starch granules fairly abundant, simple granules subrounded or polygonal, 3-16 μm in diameter, hilum pointed, cleft or V-shaped, compound granules of 2-6 components. Clusters of calcium oxalate 9-45 μm in diameter, sometimes crystal cells jointed, arranged in rows, or several clusters in one cell. Cork cells rectangular, slightly thick-walled, pale red.
(2) Shake 1 g of the powder with 10 ml of ether for 10 minutes and filter. Evaporate the filtrate to dryness, dissolve the residue in 2 ml of acetone as the test solution. Dissolve paeonol CRS in acetone to produce a solution containing 5 mg per ml as the reference solution. Carry out the method for thin layer chromatography (Appendix Ⅵ B), using silca gel G as the coating substance and a mixture of cyclohexane and ethyl acetate (3 : 1) as the mobile phase. Apply separately to the plate 10 μl of each of the above two solutions. After developing and removal of the plate, dry in air. Spray with a 5% solution of ferric chloride in ethanol acidified with hydrochloric acid, and heat to the spots clear. A bluish-brown spot in the chromatogram obtained with the test solution corresponds in postion and colour to the spot in the chromatogram obtained with the reference solution.

Water Not more than 13.0 per cent (Appendix Ⅸ H, method 2).

Total ash Not more than 5.0 per cent (Appendix Ⅸ K).

Acid-insoluble ash Not more than 1.0 per cent (Appendix Ⅸ K).

Extractives Carry out the method for determination of ethanol-soluble extractives (Appendix Ⅹ A, the hot extraction method), using ethanol as the solvent, not less than 15.0 per cent.

Assay Carry out the method for high performance liquid chromatography (Appendix Ⅵ D).

Chromatographic system and system suitability Use octadecylsilane bonded silica gel as the stationary phase and a mixture of methanol and water (45 : 55) as the mobile phase. As detector a spectrophotometer set at 274 nm. The number of theoretical plates of the column is not less than 5000, calculated with reference to the peak of paeonol.

Reference solution Dissolve a quantity of paeonol CRS, weighed accurately, in methanol to prepare a solution containing 20 μg per ml.

Test solution Weigh accurately 0.5 g of the coarse powder to a stopper conical flask, add accurately 50 ml of methanol, weigh, ultrasonicate (power 300 W, frequence 50 kHz) for 30 minutes, cool, weigh again, compensate the loss of the weight with methanol, mix well, and filter. Measure accurately 1 ml of the successive filtrate to a 10 ml volumetric flask, add methanol to volume, mix well.

Procedure Inject accurately 10 μl of each of the reference solution and the test solution, respectively, into the

column, and calculate the content.
It contains not less than 1.2 per cent of paeonol ($C_9H_{10}O_3$), calculated with reference to the dried drug.

Processing Wash clean rapidly, soften, cut into thin slices, and dry in the sun.

Action To remove *heat* from blood, activate blood circulation and eliminate blood stasis.

Indications Eruptions in epidemic diseases; spitting of blood, epistaxis; consumptive fever occurring at night and subsiding in the morning without sweating; amenorrhea, dysmenorrhea; carbuncles and sores; traumatic injuries.

Usage and dosage 6-12 g.

Storage Preserve in a cool and dry place.

Cortex Periplocae (香加皮, Xiangjiapi)

Chinese Silkvine Root-bark

Chinese Silkvine Root-bark is the dried root bark of *Periploca sepium* Bge. (Fam. Asclepiadaceae). The root is collected in spring and autumn, the root bark is stripped off, and dried in the sun.

Description Quilled or channelled, a few pieced irregularly, 3-10 cm long, 1-2 cm in diameter, 2-4 mm thick. Outer surface greyish-brown or yellowish-brown, cork soft and loose, often scaly, easily exfoliated; inner surface pale yellow or pale yellowish-brown, relatively smooth, with fine longitudinal striations. Texture light and fragile, easily broken, fracture uneven, yellowish-white. Odour, characteristic and aromatic; taste, bitter.

Identification (1) Powder: Pale brown. Prisms of calcium oxalate rare, 9-20 μm in diameter. Stone cells rectangular or subpolygonal, 24-70 μm in diameter. Laticiferous tubes containing colourless oily granules. Cork cells brownish-yellow. Starch granules numerous, simple granules subrounded or oblong, 3-11 μm in diameter; compound granules of 2-6 components.
(2) Distill 10 g of the powder with 150 ml of water in a 250 ml flask, the odour of distillate characteristic and aromatic. Transfer 10 ml of the distillate to two test tubes. To one test tube add 1 drop of 1% ferric chloride solution, a brownish-red colour is produced. To another tube add 5 ml of saturated solution of hydrazine sulfate and a few crystals of sodium acetate, warm gently and cool, a pale yellowish-green precipitate is produced. Examine under ultraviolet light at 365 nm, showing a strong yellow fluorescence.
(3) Heat under reflux 1 g of the powder with 10 ml of ethanol for 1 hour, filter. Transfer the filtrate to a 25 ml volumetric flask, and dilute with ethanol to volume, shake well. Transfer 1 ml of the ethanol solution to a 20 ml volumetric flask, dilute with ethanol to volume, shake well. Carry out the method for ultraviolet spectrophotometry and colourimetry (Appendix V A), the absorption exhibits a maximum at 278 nm.
(4) To 2 g of the powder add 30 ml of methanol, heat under reflux for 1 hour, and filter. Evaporate the filtrate to dryness, and dissolve the residue in 2 ml of methanol as the test solution. Dissolve 4-methoxy salicylic aldehyde CRS in methanol to prepare a solution containing 1 mg per ml as the reference solution. Carry out the method for thin layer chromatography (Appendix VI B), using silica gel G as the coating substance and a mixture of petroleum ether (60-90℃), ethyl acetate and glacial acetic acid (20 : 3 : 0.5) as the mobile phase. Apply separately to the plate 2 μl of each of the above two solutions. After developing and removal of the plate, dry in air. Spray with dinitrophenylhydrazine TS. The spot in the chromatogram obtained with the test solution corresponds in position and colour to the spot in the chromatogram obtained with the reference solution.

Assay Carry out the method for high performance liquid chromatography (Appendix VI D).

Chromatographic system and system suitability Use octadecylsilane bonded silica gel as the stationary phase and a mixture of methanol, water and acetic acid (70 : 30 : 2) as the mobile phase. As detector a spectrophotometer set at 278 nm. The number of theoretical plates of the column is not less than 1000, calculated with reference to the peak of 4-methoxyl salicylic aldehyde.

Internal standard solution Dissolve a quantity of *n*-butyl-*p*-hydroxybenzoate, accurately weighed, in 60% methanol to produce a solution containing 6 mg per ml as the internal standard solution.

Procedure Weigh accurately a quantity of 4-methoxyl salicylic aldehyde CRS in a brown volumetric flask, dissolve and dilute with 60% methanol to produce a solution containing 1 mg per ml. Accurately transfer 4 ml of the above solution and 2 ml of the internal standard solution to a 25 ml volumetric flask, dilute with 60% methanol to volume, and mix well. Inject accurately 20 μl into the column and plot the chromatogram. Accurately weigh 250-500 mg of the coarse powder, dried at 60℃ for 4 hours, in a 50 ml flask. Add 15 ml of 60% methanol, heat under reflux for 1.5 hours, and filter. Transfer the filtrate to a 25 ml volumetric flask, wash the container with 60% methanol, filter the washings to the same flask, add accurately 2 ml of the internal standard solution, dilute with 60% methanol to volume, and mix well. Filter with a 0.5 μm membrane filter and use the filtrate as the test solution. Inject 20 μl into the column, measure the peak area and calculate the content with corrected internal standard method.
It contains not less than 0.20 per cent of 4-methoxyl salicylic aldehyde ($C_8H_8O_3$) on the dried basis at 60℃ for 4 hours.

Processing Eliminate foreign matter, wash clean, soften thoroughly, cut into thick slices, and dry in the sun.

Action To relieve rheumatic conditions and strengthen tendons and bones.

Indications Rheumatic arthritis with aching and weakness of the loins and knees, cardiac palpitation, shortness of breath and edema of the lower extremities.

Usage and dosage 3-6 g.

Precaution Overdosage should be avoided because of its toxicity.

Storage Preserve in a cool and dry place.

Cortex Phellodendri Amurensis (关黄柏, Guanhuangbo)

Amur cork-tree

Amur Cork-tree is the dried bark of *Phellodendron amurense* Rupr. (Fam. Rutaceae). The drug is collected, removed from coarse bark, and dried in the sun.

Description Tabular or shallowly channeled, varying in length and width, 2-4 mm thick. Outer surface yellowish-green or pale brownish-yellow, relatively even, with irregular longitudinal fissures, lenticel scars small and

infrequently visible, occasionally remaining greyish-white coarse bark. Inner surface yellow or yellowish-brown. Texture light and relatively hard, fracture fibrous, showing lobelike layers, bright yellow or yellowish-green. Odour, slight; taste, very bitter, viscous on chewing.

Identification (1) Powder: Greenish-yellow or yellow. Fibres bright yellow, 16-38 μm in diameter, often in bundles, surrounded by parenchymatous cells containing prisms of calcium oxalate, forming crystal fibres; the walls of crystal cells lignified and thickened. Stone cells bright yellow, subrounded or fusiform, 35-80 μm in diameter, some branched, walls thickened, with distinct striations. Prisms of calcium oxalate 24 μm in diameter.
(2) Heat under reflux 0.1 g of the powder with 5 ml of methanol for 15 minutes and filter, add methanol to about 5 ml as the test solution. Prepare a solution with 0.1 g of Cortex Phellodendri Amurensis reference drug in the same manner as the reference drug solution. Dissolve berberine hydrochloride CRS in methanol to prepare a solution containing 0.5 mg per ml as the reference solution. Carry out the method for thin layer chromatography (Appendix Ⅵ B), using silica gel G as the coating substance and a mixture of ethyl acetate, butanone, formic acid and water (10 : 6 : 1 : 1) as the mobile phase. Apply separately to the plate 1 μl of each of the above three solutions. After developing in a chamber saturated with ammonia vapour and removal of the plate, dry in air and examine under ultraviolet light at 365 nm. The fluorescent spots in the chromatogram obtained with the test solution correspond in position and colour to the spots in the chromatogram obtained with the reference drug solution and the reference solution.

Water Not more than 12.0 per cent (Appendix Ⅸ H, method 1).

Total ash Not more than 8.5 per cent (Appendix Ⅸ K).

Assay Carry out the method for high performance liquid chromatography (Appendix Ⅵ D).

Chromatographic system and system suitability Use octadecylsilane bonded silica gel as the stationary phase and a mixture of acetonitrile and 0.1% phosphoric acid (50 : 50) (to each of 100 ml add 0.1 g of sodium dodecylsulfonate) as the mobile phase. As detector a spectrophotometer set at 265 nm. The number of theoretical plates of the column is not less than 4000, calculated with reference to the peak of berberine hydrochloride.

Reference solution Weigh accurately a quantity of berberine hydrochloride CRS, previously dried at 100℃ for 5 hours, dissolve in the mobile phase to prepare a solution containing 0.1 mg per ml.

Test solution Weigh accurately 0.5 g of the powder (through No. 3 sieve) in a stopper conical flask, add accurately 50 ml of the mobile phase, weigh, ultrasonicate (power, 250 W; frequency, 40 kHz) for 40 minutes, cool, weigh again, compensate the loss of the weight with the mobile phase, mix well, filter, and use the successive filtrate.

Procedure Inject accurately 5 μl of each of the reference solution and the test solution, respectively, into the column, and calculate the content.
It contains not less than 0.60 per cent of berberine hydrochloride ($C_{20}H_{17}NO_4 \cdot HCl$), calculated with reference to the dried drug.

Processing *Cortex Phellodendri Amurensis* Eliminate foreign matter, spray with water, soften thoroughly, cut into slivers and dry.

Cortex Phellodendri Amurensis (processed with salt) Stir-bake the slivers of Cortex Phellodendri Amurensis as described under the method for stir-baking with salt water (Appendix Ⅱ D) to dryness.

Cortex Phellodendri Amurensis (carbonized) Stir-bake the slivers of Cortex Phellodendri Amurensis as described under the method for carbonizing by stir-baking (Appendix Ⅱ D) until the surface becomes charred-black.

Action To clear *heat* and *dampness*, purge *fire* and eliminate steaming of bone, relieve *toxicity* and cure sores.

Indications Diarrhea or dysentery, jaundice, morbid leukorrhea, stranguria, beriberi, joint or muscular disorders with pain due to wind, cold or dampness and flaccidity of limbs, steaming of bone with hectic fever, night sweat, seminal emission, pyocutaneous diseases, eczema with pruritus.

Stir-baked Cortex Phellodendri with salt To nourish yin to lessen fire. Night sweat and steaming of bone due to flaming of fire from yin deficiency.

Usage and dosage 3-12 g; appropriate quantity for external use.

Storage Preserve in a ventilated and dry place, protected from moisture.

Cortex Phellodendri Chinensis (黄柏, Huangbo)

Chinese Cork-tree

Chinese Cork-tree is the dried bark of *Phellodendron chinensis* Schneid. (Fam. Rutaceae). The drug is commonly called "Chuanhuangbo". The drug is collected, removed from coarse bark, and dried in the sun.

Description Tabular or shallowly channelled, varying in length and width, 1-6 mm thick. Outer surface yellowish-brown, even or longitudinally furrowed, some showing scars of lenticels, and remains of greyish-brown coarse bark, inner surface dark yellow or pale brown, with fine longitudinal ridges. Texture light and hard, fracture fibrous, showing lobelike layers, dark yellow. Odour, slight; taste, very bitter, viscous on chewing.

Identification (1) Powder: bright yellow. Fibres bright yellow, 16-38 μm in diameter, often in bundles, surrounded by parenchymatous cells containing prisms of calcium oxalate, forming crystal fibres; the walls of crystal cells lignified and thickened. Stone cells bright yellow, subrounded, 35-128 μm in diameter, some branched, sharp at the top, walls thickened, with distinct striations; sometimes large fibrous stone cells visible, up to 900 μm in length. Prisms of calcium oxalate numerous.
(2) Heat under reflux 0.1 g of the powder with 5 ml of methanol for 15 minutes and filter, add methanol to 5 ml as the test solution. Prepare a solution with 0.1 g of Cortex Phellodendri Chinensis reference drug in the same manner as the referenc drug solution. Dissolve berberine hydrochloride CRS in methanol to produce a solution containing 0.5 mg per ml as the reference solution. Carry out the method for thin layer chromatography (Appendix Ⅵ B), using silica G as the coating substance and a mixture of toluene, ethyl acetate, methanol, isopropanol and water (6 : 3 : 2 : 1.5 : 0.3) as the mobile phase. Apply separately to the plate 1 μl of each of the above three solutions. After developing about 8 cm in a chamber pre-equilibrated with the above mobile phase and concentrated ammonia vapour for 15 min and removal of the plate, dry in

air and examine under ultraviolet light at 365 nm. The fluorescent spots in the chromatogram obtained with the test solution correspond in position and colour to the spots in the chromatogram obtained with the reference drug solution and the reference solution.

Water Not more than 12.0 per cent (Appendix Ⅸ H, method 1).

Total ash Not more than 8.0 per cent (Appendix Ⅸ K).

Extractives Carry out the method for determination of ethanol-soluble extractives (Appendix Ⅹ A, the cold maceration method), using dilute ethanol TS as the solvent, not less than 14.0 per cent.

Assay Carry out the method for high performance liquid chromatography (Appendix Ⅵ D).

Chromatographic system and system suitability Use octadecylsilane bonded silica gel as the stationary phase and a mixture of acetonitrile and 0.1% phosphoric acid (50 : 50) (to each of 100 ml add 0.1 g of sodium dodecylsulfonate) as the mobile phase. As detector a spectrophotometer set at 265 nm. The number of theoretical plates of the column is not less than 4000, calculated with reference to the peak of berberine hydrochloride.

Reference solution Dissolve a quantity of berberine hydrochloride CRS, heated previously at 100℃ for 5 hours, weighed accurately, in the mobile phase to prepare a solution containing 0.1 mg per ml.

Test solution Weigh accurately 0.1 g of the powder (through No. 3 sieve) to a 100 ml volumetric flask, add 80 ml of the mobile phase, ultrasonicate (power, 250 W; frequency, 40 kHz) for 40 minutes, cool, dilute with the mobile phase to volume, mix well, filter, and use the successive filtrate.

Procedure Inject accurately 5 μl of the reference solution and 5-20 μl of the test solution into the column, and calculate the content.

It contains not less than 3.0 per cent of berberine hydrochloride ($C_{20}H_{17}NO_4 \cdot HCl$), calculated with reference to the dried drug.

Processing *Cortex Phellodendri Chinensis* Eliminate foreign matter, spray with water, soften thoroughly, cut into slivers and dry.

Cortex Phellodendri Chinensis (*processed with salt*) Stir-bake the slivers of Cortex Phellodendri Chinensis as described under the method for stir-baking with salt water (Appendix Ⅱ D) to dryness.

Cortex Phellodendri Chinensis (*carbonized*) Stir-bake the slivers of Cortex Phellodendri Chinensis as described under the method for carbonizing by stir-baking (Appendix Ⅱ D) until the surface becomes charred-black.

Action To remove *damp-heat*, quench *fire*, counteract *toxicity*, and relieve consumptive fever.

Cortex Phellodendri Chinensis (*processed with salt*) To nourish *yin* and reduce *fire*.

Indications Dysentery, jaunice and morbid leukorrhea caused by *damp-heat*; urinary infectious; weakness and edema of legs; consumptive fever and night sweating; seminal emission; sores and skin infection with local redness and swelling; eczema with itching.

Cortex Phellodendri Chinensis (*processed with salt*) Night sweating and consumptive fever due to exuberant *fire* secondary to deficiency *of yin*.

Usage and dosage 3-12 g; appropriate quantity for external use.

Storage Preserve in a ventilated and dry place, protected from moisture.

Cortex Pseudolaricis (土荆皮, Tujingpi)

Golden Larch Bark

Golden Larch Bark is the dried root bark or stem bark near the root of *Pseudolarix kaempferi* Gord. (Fam. Pinaceae). The drug is collected in summer, and dried in the sun.

Description Root bark irregularly long slat-shaped, twisted and slightly rolled, varying in size, 2-5 mm thick. Outer surface greyish-yellow, rough, with wrinkes and greyish-white transverse lenticel-like prominences, the rugged external tissues frequently scaling off, with reddish-brown exposed surface. Inner surface yellowish-brown to reddish-brown, even, with fine longitudinal striations. Texture flexible, fracture splintery, easily detachable in flakes. Odour, slight; taste, bitter and astringent.

Stem bark in flat pieces, up to about 8 mm thick, the rugged external tissues relatively thick. Outer surface cracked and inner surface relatively rough.

Identification (1) Powder: Pale brown or brownish-red. Stone cells abundant, subrectangular, subrounded or irregularly branched, 30-96 μm in diameter, containing yellowish-brown masses. Most sieve cells in bundles, 20-40 μm in diameter, numerous elliptical sieve areas scattered over the side walls, Mucilage cells subrounded, 100-300 μm in diameter. Resin cells longitudinally connected into tubeform, containing reddish-brown to yellowish-brown resinous matter, sometimes embedded with prisms of calcium oxalate. Walls of cork cells slightly thickend, sometimes lignified and pitted.

(2) To 1 g of the powder add 20 ml of methanol, ultrasonicate for 20 minutes, allow to cool, filter, and use the filtrate as the test solution. Prepare a solution with 1 g of Cortex Pseudolaricis reference drug in the same manner as the reference drug solution. Dissolve pseudolaric acid CRS in methanol to prepare a solution containing 0.2 mg per ml as the reference solution. Carry out the method for thin layer chromatography (Appendix Ⅵ B), using silica gel G as the coating substance and a mixture of toluene, ethyl acetate and formic acid (14 : 4 : 0.5) as the mobile phase. Apply separately to the plate 5 μl of each of the above three solutions. After developing and removal of the plate, dry in air. Spray with 10% sulfuric acid in ethanol, and heat at 105℃ to the spots clear. Examine under ultraviolet light at 365 nm. The fluorescent spots in the chromatogram obtained with the test solution correspond in position and colour to the spots in the chromatogram obtained with the reference drug solution and the reference solution.

Water Not more than 13.0 per cent (Appendix Ⅸ H, method 1).

Total ash Not more than 6.0 per cent (Appendix Ⅸ K).

Acid-insoluble ash Not more than 2.0 per cent (Appendix Ⅸ K).

Extractives Carry out the method for determination of ethanol-soluble extractives (Appendix Ⅹ A, the hot extraction method), using 75% ethanol as the solvent, not less than 15.0 per cent.

Assay Carry out the method for high performance liquid chromatography (Appendix Ⅵ D).

Chromatographic system and system suitability Use octylsilane bonded silica gel as the stationary phase and a mixture

of methanol and 1% acetic acid solution (50 : 50) as the mobile phase. As detector a spectrophotometer set at 260 nm. The number of theoretical plates of the column is not less than 5000, calculated with reference to the peak of pseudolaric acid.

Reference solution Dissolve a quantity of pseudolaric acid CRS, weighed accurately, in methanol to prepare a solution containing 45 μg per ml as the reference solution.

Test solution Weigh accurately 0.2 g of the powder (through No. 3 sieve) to a stopper conical flask, add accurately 25 ml of methanol, weigh, heat on a water bath for 1 hour, cool, weigh again, compensate the loss of the weight with methanol, mix well, filter, and use the successive filtrate.

Procedure Inject accurately 10 μl of each of the reference solution and the test solution, respectively, into the column, and calculate the content.
It contains not less than 0.25 per cent of pseudolaric acid ($C_{23}H_{28}O_8$), calculated with reference to the dried drug.

Processing Wash clean, soften slightly, cut into slivers, and dry in the sun.

Action To kill parasites and relieve itching.

Indications Scabies and tinea.

Usage and dosage Appropriate quantity soaked with vinegar or wine, or ground into powder and mixed with water for topical application.

Storage Preserve in a dry place.

Crinis Carbonisatus (血余炭, Xueyutan)

Carbonized Hair

Carbonized Hair is made of the human hair. The hair is removed from foreign matter, washed with soda water, rinsed clean with water, dried in the sun, carbonized by calcining, cooled in air.

Description In irregular pieces, black, lustrous, with many fine pores. Texture light and fragile. Odour, scorching on burning; taste, bitter.

Acid-insoluble ash Not more than 10 per cent (Appendix Ⅸ K).

Action To arrest bleeding and remove blood stasis.

Indications Hematemesis, epistaxis, hematuria, abnormal uterine bleeding, traumatic bleeding.

Usage and dosage 4.5-9 g.

Storage Preserve in a dry place.

Endoconcha Sepiae (海螵蛸, Haipiaoxiao)

Cuttlebone

Cuttlebone is the dried internal shell of *Sepiella maindroni* de Rochebrune or *Sepia esculenta* Hoyle (Fam. Sepiidae). The drug is collected, washed clean, and dried.

Description *Internal shell of Sepiella maindroni* Flattened oblong, thick in the central part and thin at the edge, 9-14 cm long, 2.5-3.5 cm wide, and about 1.3 cm thick. The dorsal surface bearing a porcelain white ridge-like protuberance, both sides somewhat reddish, with indistinct minute tubercles. The ventral surface white, with fine and dense undulate transverse striations from the caudal end to the middle portion. Horny margin translucent; the caudal portion relatively wide and even, without bony spine. Texture light and lax, easily broken. Fracture powdery, showing loose striations. Odour, slightly stinking; taste, slightly salty.

Internal shell of Sepia esculenta 13-23 cm long, up to about 6.5 cm wide. The dorsal surface with distinct tubercles, somewhat laminated arranged. The ventral surface mostly covered by the fine and dense undulate transverse striations, and a longitudinal shallow groove in the middle. The horny margin of the caudal portion gradully widen and curved ventrally, with a bony spine at the end of the caudal portion, usually broken and fallen off.

Identification (1) Powder: whitish. Irregular transparent thin slices abundant, some with fine striations; some in irregular broken pieces, with reticulate or dotted striations on the surface.
(2) To the powder add dilute hydrochloric acid, bubbles are produced.

Processing Eliminate foreign matter, wash clean, dry, break to small pieces.
Mostly in irregular or subrectangular small pieces; whitish or slightly yellowish; taste, weak.

Action To stop bleeding, arrest seminal discharge or leukorrhea, inhibit gastric secretion, and promote the healing of wound.

Indications Gastric pain with acid regurgitation; spitting of blood, epistaxis, abnormal uterine bleeding, hematochezia; seminal emission, spermatorrhea; morbid leukorrhea; external use for traumatic bleeding and wound with purulent discharge.

Usage and dosage 5-9 g; for external use, appropriate quantity to be ground into powder and applied topically.

Storage Preserve in a dry place.

Endothelium Corneum Gigeriae Galli (鸡内金, Jineijin)

Chicken's Gizzard-skin

Chicken's Gizzard-skin is the dried inner wall of the gizzard of *Gallus gallus domesticus* Brisson (Fam. Phasianidae). The gizzard is collected after the chicken is killed. The inner wall of the gizzard is

peeled off immediately, washed clean, and dried.

Description In irregular rolled slices, about 2 mm in thickness. Externally yellow, yellowish-green or yellowish-brown, thin and translucent, with prominent streak-shaped wrinkles. Texture fragile, easily broken, fracture horny, lustrous. Odour, slightly stinking; taste, slightly bitter.

Water Carry out the method for determination of water (Appendix Ⅸ H, method 1), not more than 15.0 per cent.

Total ash Not more than 2.0 per cent (Appendix Ⅸ K).

Acid-insoluble ash Not more than 1.0 per cent (Appendix Ⅸ K).

Extractives Carry out the method for determination of ethanol-soluble extractives (Appendix Ⅹ A, the hot extraction method), using dilute ethanol TS as the solvent, not less than 7.5 per cent.

Processing *Endothelium Corneum Gigeriae Galli* Wash clean, and dry.

Endothelium Corneum Gigeriae Galli (*Stir-baked*) Stir-bake the clean Endothelium Corneum Gigeriae Galli as described under the method for simple stir-baking or scalding (Appendix Ⅱ D) to swell.
Externally dark yellowish-brown to charring yellow, granular or fine bubble-shaped under magnifying glass, broken when bend gently, fracture lustrous.

Endothelium Corneum Gigeriae Galli (*processed with vinegar*) Stir-bake the clean Endothelium Corneum Gigeriae Galli as described under the method for simple stir-baking (Appendix Ⅱ D) to swell, spray with vinegar, take out, and dry. To each 100 kg of Endothelium Corneum Gigeriae Galli add 15 kg of vinegar.

Action To promote digestion, arrest seminal emission, and cure enuresis.

Indications Vomiting and diarrhea due to indigestion, malnutrition due to improper feeding, and enuresis in children; seminal emission.

Usage and dosage 3-9 g.

Storage Preserve in a dry place, protected from moth.

Eupolyphaga seu Steleophaga (土鳖虫, Tubiechong)

Ground Beetle

Ground Beetle is the dried body of female, *Eupolyphaga sinensis* Walker or *Steleophaga plancyi* (Boleny) (Fam. Corydiidae). The drug is collected, scalded to death by boiling water, and dried in the sun or by heat.

Description *Body of Eupolyphaga sinensis* Flattened ovoid, 1.3-3 cm long, 1.2-2.4 cm wide. Anterior end relatively narrow, posterior end relatively broad, dorsal side purplish-brown, lustrous, wingless. Dorsal plate of prothorax fairly developed, covering the head; dorsal plate of abdomen consisiting of 9 segments, imbricating. Ventral surface reddish-brown. Head relatively small, with a pair of filiform antennae, usually sheded. Thorax bearing 3 pairs of legs with fine hairs and spines. Abdomen with transversely annular segments. Texture lax and fragile, easily broken. Odour, stinking and foul; taste, slightly salty.

Body of Steleophaga plancyi 2.2-3.7 cm long, 1.4-2.5 cm wide. Dorsal side blackish-brown, usually with pale yellowish-brown specks and black spots near the edges.

Identification (1) Powder: Greyish-brown. Fragments of the body wall deep brown or yellow, irregular striation in surface view, setae short thick or slender thin, usually adhered to the surface, setae pits visible, formed by setae fallen off, rounded, 5-32 μm in diameter; setae brownish-yellow or yellow, sharply pointed or blunt at the tip, 12-270 μm long, 10-32 μm in diameter, some with longitudinal straight striations. Striated muscle fibers colourless or light yellow, usually broken, with dense transverse stripes, straight or slight undulated, the light bands wider than the dark bands.
(2) To 1 g of the power add 25 ml of methanol, ultrasonicate for 30 minutes, filter, evaporate the filtrate to dryness. Dissolve the residue in 5 ml of methanol as the test solution. Prepare a solution of 1 g of Eupolyphage seu Steleophaga reference drug in the same manner as the reference drug solution. Carry out the method for thin layer chromatography (Appendix Ⅵ B), using silica gel G as the coating substance and a mixture of toluene, dichloromethane and acetone (5 : 5 : 0.5) as the mobile phase. Apply separately to the plate 10 μl of the above two solutions. After developing and removal of the plate, dry in air. Examine under ultraviolet light at 365 nm. The fluorescent spots in the chromatogram obtained with the test solution correspond in position and colour to the spots in the chromatogram obtained with the reference drug solution. Spray with TS of vanillin in sulfuric acid, and heat at 105℃ to spots clear. The spots in the chromatogram obtained with the test solution correspond in position and colour to the spots in the chromatogram obtained with the reference drug solution.

Foreign matter Not more than 5.0 per cent (Appendix Ⅸ A).

Water Carry out the method for determination of water (Appendix Ⅸ H, method 1), not more than 10.0 per cent.

Total ash Not more than 13.0 per cent (Appendix Ⅸ K).

Acid-insoluble ash Not more than 5.0 per cent (Appendix Ⅸ K).

Extractives Carry out the method for determination of water-soluble extractives (Appendix Ⅹ A, the hot extraction method), not less than 22.0 per cent.

Action To remove blood stasis with powerful effect, and promote the healing of bone fracture.

Indications Bone fracture; amenorrhea and formation of masses in the abdomen due to blood stasis.

Usage and dosage 3-9 g.

Precaution Contraindicated in pregnancy.

Storage Preserve in a ventilated dry place, protected from moth.

Exocarpium Benincasae (冬瓜皮, Dongguapi)

Chinese Waxgourd Peel

Chinese Waxgourd Peel is the dried exocarp of *Benincasa hispida* (Thunb.) Cogn. (Fam. Cucurbitaceae). The fruit is washed clean, and the exocarp is collected, and dried in the sun.

Description Irregular pieces, frequently involute, varying in size. The outer surface greyish-green or yellowish-white,

glaucous, sometimes smooth; the inner surface relatively rough, sometimes the veins of vascular bundles visible. Texture light and fragile. Odour, slight; taste, weak.

Identification Powder: Brownish-yellow to yellowish-green. Epiderm cells of the pericarp subpolyangular in surface view, anticlinal walls smooth and straight; stomata anomocytic, subsidiary cells 5-7. Stone cells aggregated, sub-rounded or polyangular, 10-56 μm in diameter, pits and pit canals distinct. Spiral vessels numerous, 16-54 μm in diameter.

Water Carry out the method for determination of water (Appendix Ⅸ H, method 1). It contains not more than 12.0 per cent.

Total ash Not more than 12.0 per cent (Appendix Ⅸ K).

Processing Eliminate foreign matter, wash clean, cut into pieces or wide slivers, dry in the sun.

Action To cause urination.

Indications Edema with oliguria; thirsty and scanty dark urine due to *summer-heat*.

Usage and dosage 9-30 g.

Storage Preserve in a dry place.

Exocarpium Citri Grandis (化橘红, Huajuhong)

Pummelo Peel

Pummelo Peel is the dried exocarp of unripe or almost ripe *Citrus grandis* "Tomentosa" or *Citrus grandis* (L.) Osbeck (Fam. Rutaceae). The former is commonly known as "Maojuhong", and the latter "Guangqizhua" or "Guangwuzhua". The drug is collected in summer when the fruit is unripe, treated with boiling water for a moment, and the exocarp is cut into five or seven valves, removed from the emergence and parts of mesocarp, compressed to a definite shape, and dried.

Description *Exocarp of Citrus grandis* "Tomentosa" Opposite-foldly septangular-shaped or spreadly star-shaped, the single piece willow-leaf-shaped. When whole, 15-28 cm in diameter, when spread, 2-5 mm thick. Outer surface yellowish-green, densely pubescent, with wrinkles and small oil cavities; inner surface yellowish-white or pale yellowish-brown, with veins striations. Texture fragile, easily broken, fracture uneven, with one row of uneven and sunken oil cavities in the outer border, the inner part slightly soft and elastic. Odour, aromatic; taste, bitter and slightly pungent.

Exocarp of Citrus grandis Outer surface yellowish-green to yellowish-brown, glabrous.

Identification (1) Powder: Dark green to brown. Parenchymatous cells of mesocarp irregular, walls unevenly thickened, some beaded or extremely thickened at corners. Epidermal cells of pericarp polygonal, subsquare or rectangular in surface view, anticlinal walls thickened. Stomata subrounded, 18-31 μm in diameter, with 5-7 subsidiary cells, covered with cuticle layer in lateral view the outer radial walls thickened. Fracture of nonglandular hairs visible occasionally, cells of fragments up to over ten, about 33 μm in diameter at the widest position, walls warty or outer walls smooth and inner walls rough, lumina containing pale yellow or brown granular masses. Prisms of calcium oxalate polyhedral, rhombic, rhomboid-prismatic, rectangular or irregular, 1-32 μm in diameter, 5-40 μm long, occurring in parenchymatous cells of mesocarp, abundantly or in rows. Vessels spiral or reticulated. Stone cells and fibres visible occasionally.

(2) To 1 g of the powder add 10 ml of methanol, heat under reflux for 20 minutes, cool and filter. To 1 ml of the filtrate add about 5 mg of potassium tetrahydroborate, mix well and add several drops of hydrochloric acid; a cherry-red or purple colour is produced.

(3) Use the filtrate obtained from Identification (2) as the test solution. Dissolve naringin CRS in methanol to produce a solution containing 0.4 mg per ml as the reference solution. Carry out the method for thin layer chroma tography (Appendix Ⅵ B), using silica gel G as the coating substances and the upper layer of ethyl acetate, formic acid and water (10 : 2 : 3) as the mobile phase. Apply to the plate 10 μl of each of two solutions. After developing and removal of the plate, dry in air, spray with aluminium chloride TS and examine under ultraviolet light at 365 nm. The fluorescent sopts in the chromatogram obtained with the test solution correspond in position and colour to the spots in the chromatogram obtained with the reference solution.

Assay Carry out the method for high performance liquid chromatography (Appendix Ⅵ D).

Chromatographic system and system suitability Use octadecylsilane bonded silica gel as the stationary phase and methanol, acid acetic and water (35 : 4 : 61) as the mobile phase. The wavelength of the detector is 283 nm. The number of theoretical plates for the column is not less than 1000, calculated with the reference to the peak of naringin.

Reference solution Weigh accurately 20 mg of naringin CRS, in a 100 ml volumetric flask, dilute with methanol to volume, and mix well. Accurately measure 3ml in a 10 ml volumetric flask, dilute with methanol to volume, and mix well (containing 60 μg of naringin per ml).

Test solution Weigh accurately 1 g of the coarse powder, in a Soxhlet's extractor, add 80 ml of petroleum ether (60-90℃), heat under reflux on a water bath for 2-3 hours. Discard the petroleum ether extract and expel solvent remained in the residue, add 80 ml of methanol, further heat under reflux on a water bath for 3 hours until the extract is colourless, cool, and filter. Transfer the filtrate to a 100 ml volumetric flask, wash the container with a small quantity of methanol for several times, filter the washings to the same flask, dilute with methanol to volume, and mix well. Measure accurately 5 ml in a 25 ml volumetric flask, dilute with methanol to volume, and mix well.

Procedure Inject accurately 5 μl of the reference solution and 3-20 μl (varying according to the content) of the test solution into the column, and calculate the content.

It contains not less than 1.5 per cent of naringin ($C_{27}H_{32}O_{14} \cdot 2H_2O$), calculated with reference to the dried drug.

Processing Eliminate foreign matter, wash clean; soften thoroughly, cut into slivers or pieces, and dry in the sun.

Action To dispel *cold*, eliminate *damp* and *phlegm*, and promote qi flow.

Indications Cough, itching of the throat and profuse expectoration due to *cold*; nausea, vomiting and epigastric distension caused by improper diet or excessive drinking.

Usage and dosage 3-6 g.

Storage Preserve in a cool and dry place, protected from moth.

Exocarpium Citri Rubrum (橘红, Juhong)

Red Tangerine Peel

Red Tangerine Peel is the dried exocarp of *Citrus reticulata* Blanco and its cultivars (Fam. Rutaceae). The ripe fruit is collected in late autumn and early winter, the exocarp is splited and collected, dried in the sun or in the shade.

Description Long stripes or irregular thin slices, margin shrunken and curved inward. The outer surface yellowish-brown or orange-red, becoming dark brown on storage, with numerous yellowish-white oil cavities. The inner surface yellowish-white, with numerous sunken and transparent small spots. Texture fragile, easily broken. Odour, aromatic; taste, slightly bitter and numb.

Identification (1) Powder: Pale yellowish-brown. Epidermal cells of the pericarp polygonal, subsquare or rectangular in surface view, anticlinal walls thickened, stomata subrounded, 18-26 μm in diameter, subsidiary cells indistinct; covered with cuticle in side view and the outer part of radial walls thickened. The walls of parenchymatous cells surrounding the fragments of oil cavities slightly thickened. Parenchymatous cells containing prisms of calcium oxalate.

(2) To 0.3 g of the powder add 10 ml of methanol, heat under reflux for 20 minutes, concentrate 5 ml of the filtrate to 1 ml as the test solution. Dissolve hesperidin CRS in methanol to produce a saturated solution as the reference solution. Carry out the method for thin layer chromatography (Appendix Ⅵ B) using silica gel G as the coating substance and a mixture of ethyl acetate, methanol, and water (100 : 17 : 3) as the mobile phase. Apply separately 2 μl of each of the two solutions to the plate. After developing (about 3 cm) and removal of the plate, dry in air. And then use a mixture of toluene, ethyl acetate, formic acid, and water (20 : 10 : 1 : 1, supernatant) as the mobile phase, after developing (about to 8 cm) and removal of the plate, dry in air, spray with aluminium chloride, examine under ultraviolet light at 365 nm. The fluorescent spot in the chromatogram obtained with the test solution corresponds in colour and position to spot in the chromatogram obtained with the reference solution.

Assay Carry out the method for high performance liquid chromatography (Appendix Ⅵ D).

Chromatographic system and system suitability Use octadecylsilane bonded silica gel as the stationary phase and methanol and water (40 : 60) as the mobile phase. The wavelength of the detector is 284 nm. The number of theoretical plates of the column is not less than 2000, calculated with the reference to the peak of hesperidin.

Reference solution Weigh accurately a quantity of hesperidin CRS, dissolve in methanol to produce a solution containing 60 μg per ml as the reference solution.

Test solution Weigh accurately about 0.2 g of the powder (through No. 4 sieve), add 20 ml of methanol, heat and reflux for 1 hour, allow to cool, transfer to a 50 ml volumetric flask, wash the container and the residue with a little of methanol for several times, add the washings to the same volumetric flask, add methanol to the volume, mix well, filter, collect the successive filtrate as the test solution.

Procedure Inject accurately 10 μl of each of the reference solution and the test solution respectively into the column, determine and calculate the content.

It contains not less than 1.7 per cent of hesperidin ($C_{28}H_{34}O_{15}$), calculated with reference to the dried drug.

Processing Eliminate foreign matter, cut into slices.

Action To dispel *cold*, eliminate *dampness* and *phlegm*, and promote *qi* flow.

Indications Cough, itching of the throat and profuse expectoration of phlegm due to *cold*; nausea, vomiting and epigastric distension caused by improper diet or excessive cold drinks.

Usage and dosage 3-9 g.

Storage Preserve in a cool and dry place, protected from moth.

Note: The main cultivaries are *Citrus reticulata* 'Dahongpao' and *Citrus reticulata* 'Tangerina'.

Flos Albiziae
(合欢花，Hehuanhua)

Albizia Flower

Albizia Flower is the dried inflorescence of *Albizia julibrissin* Durazz. (Fam. Leguminosae). The drug is collected when flowering on fine days in summer, and dried in the sun in time.

Description Capitulum crumpled to masses. The whole pedicel 3-4 cm long, sometimes separated from capitulum, yellowish-green, with striations, covered with sparse hairs. The whole flower densely covered with tomenta, slender and curved, 0.7-1 cm long, pale yellow or yellowish-brown, without or almost without pedicel. Calyx tubular, 5-toothed at the apex. Corolla tube about 2 times in length of calyx tube, 5-lobed at the apex, lobes lanceolate. Stamens numerous, filaments slender, yellowish-brown, accreted at the lower part and separated at the upper part, longexerted. Odour, slightly aromatic; taste, weak.

Identification (1) Powder: Greyish-yellow. Non-glandular hairs unicellular, 81-447 μm long. Prisms of calcium oxalate frequently occurring in the parenchymatous cells, 3-31 μm in diameter. Compound pollen grains oblate, 16 polysomic, 81-146 μm in diameter, the central 8 monosomic arranged in cruciform and surrounded by the other 8 monosomic; individual monosomic subsquare or long-spherical.
(2) To 1 g of the powder add 10 ml of ether, stand for 1 hour, filter, evaporate the filtrate to dryness, dissolve the residue in 0.5 ml of ethyl acetate as the test solution. Prepare a solution of Flos Albiziae reference drug in the same manner as the test solution. Carry out the method for thin layer chromatography (Appendix Ⅵ B) using silica gel G as the coating substance and a mixture of *n*-hexane and ethyl acetate (17 : 3) as the mobile phase. Apply separately 6 μl of each of the above two solutions to the plate. After developing and removal of the plate, dry in air, spray with 5% solution of vanillin in sulfuric acid, dry with hot air until the colour of spots appear clearly. The spot in the chromatogram obtained with the test solution corresponds in colour and position to the spot in the chromatogram obtained with the reference drug solution.

Foreign matter Not more than 2 per cent (Appendix Ⅸ A).

Water Not more than 15.0 per cent (Appendix Ⅸ H, Method 1).

Total ash Not more than 10.0 per cent (Appendix Ⅸ K).

Acid-insoluble ash Not more than 3.0 per cent (Appendix Ⅸ K).

Extractives Carry out the hot extraction method for determination of ethanol-soluble extractives (Appendix Ⅹ A), using dilute ethanol as the solvent, not less than 25.0 per cent.

Action To ease the mind and induce tranquilization.

Indications Anxiety, depression and insomnia.

Usage and dosage 4.5-9 g.

Storage Preserve in a ventilated and dry place.

Flos Buddlejae
(密蒙花，Mimenghua)

Pale Butterflybush Flower

Pale Butterflybush Flower is the dried flower bud and its inflorescence of *Buddleja officinalis* Maxim. (Fam. Loganiaceae). The drug is collected in spring before flowering, removed from foreign matter, and dried.

Description Mainly small branches of inflorescence bearing dense flower buds, irregularly conical, 1.5-3 cm long. Externally greyish-yellow or brownish-yellow, densely pubescent. Flower buds clavate, with the upper side slightly larger. 0.3-1 cm long, 0.1-0.2 cm in diameter; calyx campanulate with 4 terminal teeth; corolla tubular, as long as calyx or longer, with 4 terminal lobes, lobes ovate; stamens 4, inserted on the middle of corolla tube. Texture soft. Odour, slightly aromatic; taste, slightly bitter and pungent.

Identification Calyx and corolla in surface view: The lower epidermis densely covered with non-glandular hairs, usually 4-celled, at the base 2-celled, uniseriate; at the apex 2-celled, biseriate, each cell 2-forked, forks 250-500 μm long, walls extremely thick, lumen linear. The upper epidermis of corolla with few non-glandular hairs, unicellular, 200-600 μm long, walls with numerous spiny emergences. Pollen grains globose, 13-20 μm in diameter, exine smooth, with 3 germinal pores.

Assay Carry out the method for high performance liquid chromatography (Appendix Ⅵ D).

Chromatographic system and system suitability Use octadecylsilane bonded silica gel as the stationary phase and a mixture of methanol, water and acetic acid (45 : 54.5 : 0.5) as the mobile phase. As detector a spectrophotometer set at 326 nm. The number of theoretical plates of the column is not less than 1000, calculated with reference to the peak of buddleoside.

Reference solution Dissolve 10 mg of buddleoside CRS, accurately weighed, in a 100 ml volumetric flask, dilute with methanol to volume, shake thoroughly to produce a solution of 0.1 mg per ml.

Test solution Weigh accurately 0.5 g of the powder in a Sohxlet's extractor, add 100 ml of petroleum ether (60-90℃), heat under reflux for 2 hours, discard petroleum ether and expel, add 100 ml of methanol and heat under reflux for 4 hours, concentrate the extracts to a quantity on an evaporating dish, transfer to a 50 ml volumetric flask, add methanol to volume.

Procedure Inject separately 10 μl of the reference solution and 5-10 μl of the test solution, accurately measured, into the column, determine and calculate the content. It contains not less than 0.50 per cent of buddleoside ($C_{28}H_{32}O_{14}$).

Action To remove *heat*, replenish the liver and remove nebula to improve vision.

Indications Inflammation of eyes with lacrimation and photophobia; blurred vision due to deficiency of the *liver*; nebula.

Usage and dosage 3-9 g.

Storage Preserve in a ventilated and dry place, protected from moisture.

Flos Campsis
(凌霄花, Lingxiaohua)

Trumpetcreeper Flower

Trumpetcreeper Flower is the dried flower of *Campsis grandiflora* (Thunb.) K. Schum. or *Campsis radicans* (L.) Seem. (Fam. Bignoniaceae). The drug is collected at flowering in summer and autumn, and dried.

Description *Flower of Campsis grandiflora* Frequently shrunken and curved, yellowish-brown to dark brown, the whole one, 4-5 cm long. Calyx tube campanulate, 2-2.5 cm long, 5-lobed, up to the middle of calyx tube, bearing 5 longitudinal lines from the base of calyx tube to the apex of calyx tooth. Corolla 5-lobed at the apex, lobes hemicircular, connected at the lower part, funnel-shaped, with fine striations on the surface, relatively distinct on the inner surface. Stamens 4, didynamous, inserted on the corolla tube, anthers-shaped, style 1, stigma flat. Odour, slightly aromatic; taste, slightly bitter and sour.

Flower of Campsis radicans The whole one, 6-7 cm long. Calyx tube 1.5-2 cm long, coriaceous, 5-toothed at the apex, the teeth short triangular, about 1/3 in length of calyx tube, longitudinal lines on the outer surface of calyx tube indistinct. The inner surface of corolla tube bearing distinct, dark brown striations.

Identification (1) Powder: Yellowish-brown. Pollen grains subrounded, 24-31 μm in diameter, with 3 furrows, surface bearing extremely fine reticulate strations. Glandular hairs yellowish or yellowish-brown, head ellipsoid, subrounded or oval, 1-2 layer of cells palisade-like arranged in lateral view, stalk 1-3 celled. Epidermal cells of corolla subpolygonal, spiral vessels visible.

(2) To 0.5 g of the powder add 15 ml of petroleum ether (60-90℃), sonicate for 15 minutes, filter, discard the filtrate. To the drug residue add 15 ml of methanol, sonicate for 15 minutes, filter and evaporate the filtrate to dryness. Dissolve the residue in 1 ml of methanol as the test solution. Prepare the reference drug solution using 0.5 g of Flos Campsis reference drug treated in the same manner. Carry out the method for thin-layer chromatography (Appendix Ⅵ B), using silica gel G containing sodium carboxymethylcellulose as the coating substance and a mixture of chloroform and methanol (9 : 1) as the mobile phase. Apply separately to the plate 1 μl of each of the above two solutions. After developing and removal of the plate, dry in air, treat it with idiom vapour until clear spots appear. The spot in the chromatogram obtained with the test solution corresponds in position and colour to the spot obtained with the reference drug solution.

Action To remove *heat* from the blood, remove blood stasis and dispel *wind*.

Indications Abnormal menstruation, amenorrhea with abdominal masses; swelling breast after childbirth; rubella red in colour; itching; acne.

Usage and dosage 5-9 g.

Precaution Be cautious about pregnant women.

Storage Preserve in a ventilated and dry place, protected from moisture.

Flos Carthami
(红花, Honghua)

Safflower

Safflower is the dried flower of *Carthamus tinctorius* L. (Fam. Compostiae). The drug is collected in summer when its colour turns from yellow to red, and dried in shade or in the sun.

Description The drug consisting of tubular flowers without ovaries, 1-2 cm long. Externally reddish-yellow or red. Corolla tubes slender, 5-lobed at the apex, the lobes narrowly belt-shaped, 5-8 mm long. Stamens 5, anthers aggregated to a tube, yellowish-white. Stigma long cylindrical, slightly 2-cleft. Texture pliable. Odour, slightly aromatic; taste, slightly bitter.

Identification (1) Powder: Orange-yellow. The fragments of corolla, filament and stigma frequently visible. Long tubular secretory cells present, generally accompanied by vessels, up to 66 μm in diameter, containing yellowish-brown to reddish-brown secretion. Outer walls of terminal epidermal cells of corolla lobes projecting to be tomentellate. Upper epidermal cells of stigma and style differentiated into conical unicellular hairs, acuminate or slightly obtuse at the apex. Pollen grains subrounded, elliptical or olivary, up to 60 μm in diameter, with 3 germinal pores, exine dentate-spinose. Prisms of calcium oxalate occurring in parenchymatous cells, 2-6 μm in diameter.

(2) To 0.5 g of the powder add 5 ml of 80% acetone solution, stopper tightly, shake constantly for 15 minutes and allow to stand; the supernatant liquid is used as the test solution. Prepare the reference drug solution in the same manner using 0.5 g of Flos Carthami reference drug. Carry out the method for thin layer chromatography (Appendix Ⅵ B), using silica gel H containing carboxymethylcellulose sodium as the coating substance and a mixture of ethyl acetate, formic acid and water-methanol (7 : 2 : 3 : 0.4) as the mobile phase. Apply separately to the plate 5 μl of each of the solutions. After developing and removal of the plate, dry in air. The spots in the chromatogram obtained with the test solution correspond in position and colour to the spots obtained with the reference drug solution.

Foreign matter Not more than 2% (Appendix Ⅸ A).

Water Not more than 13.0 per cent (Appendix Ⅸ H, Method 1).

Total ash Not more than 15.0 per cent (Appendix Ⅸ K).

Acid-insoluble ash Not more than 5.0 per cent (Appendix Ⅸ K).

Absorbance *Red pigment* Dry the drug in a desiccator over silica gel for 24 hours and grind into a fine powder. Macerate warmly about 0.25 g of the fine powder, accurately weighed, with 50 ml of 80% acetone solution in a conical flask at 50℃ on a water bath for 90 minutes, cool, filter through a sintered glass funnel (No. 3) into a 100 ml volumetric flask, wash the residue with 25 ml of 80% acetone solution in portions. Transfer the washings into the volumetric flask, add 80% acetone solution to the volume, and mix well. Carry out the method for ultraviolet spectrophotometry and colourimetry (Appendix Ⅴ A), measure the absorbance of the solution at 518 nm, not less than 0.20.

Extractives Carry out the cold maceration method for determination of water-soluble extractives (Appendix Ⅹ

A), not less than 30.0 per cent.

Assay Hydroxysafflor yellow A Carry out the method for high performance liquid chromatography (Appendix Ⅵ D).

Chromatographic system and system suitability Use octadecylsilane bonded silica gel as the stationary phase and a mixture of methanol, acetonitrile and 0.7% phosphate acid solution (26 : 2 : 72) as the mobile phase. As detector a spectrophotometer set at 403 nm. The number of theoretical plates of the column is not less than 3000, calculated with reference to the peak of hydroxysafflor yellow A CRS.

Reference solution Dissolve a quantity of hydroxysafflor yellow A CRS, accurately weighed, in 25% methanol to produce a solution of 0.13 mg per ml.

Test solution Weigh accurately 0.4 g of the powder (through No. 3 sieve) in a conical flask with stopper, add 50 ml of 25% methanol, accurately measured, weigh accurately and ultrasonicate (power, 300 W; frequency, 50 kHz) for 40 minutes, allow it to cool and weigh again, replenish the loss of the solvent with 25% methanol, and mix well. Filter and use the successive filtrate as the test solution.

Procedure Inject accurately 10 μl of each of the two solutions into the column, and calculate the content.
It contains not less than 1.0 per cent of hydroxysafflor yellow A ($C_{27}H_{30}O_{15}$), calculated with reference to the dried drug.

Kaempferol Carry out the method for high performance liquid chromatography (Appendix Ⅵ D).

Chromatographic system and system suitability Use octadecylsilane bonded silica gel as the stationary phase and a mixture of methanol and 0.4% phosphate acid solution (52 : 48) as the mobile phase. As detector a spectrophotometer set at 367 nm. The number of theoretical plates of the column is not less than 3000, calculated with reference to the peak of kaempferol CRS.

Reference solution Dissolve a quantity of kaempferol CRS, accurately weighed, in methanol to produce a solution of 9 μg per ml.

Test solution Weigh accurately 0.5 g of the powder (through No. 3 sieve) in a conical flask with stopper, add 25 ml of methanol, accurately measured, weigh accurately and heat under reflux for 30 minutes, allow it to cool and weigh again, replenish the loss of the solvent with methanol, mix well and filter. Measure accurately 15 ml of the successive filtrate to a flat bottom flask, add 5 ml of hydrochloric acid (15→37), mix well and heat to hydrolysis on a water bath for 30 minutes, cool immediately, transfer to a 25 ml volumetric flask, dilute with methanol to volume and mix well.

Procedure Inject accurately 10 μl of each of the two solutions into the column, and calculate the content.
It contains not less than 0.050 per cent of kaempferol CRS ($C_{15}H_{10}O_6$), calculated with reference to the dried drug.

Action To activate blood circulation and stimulate menstrual discharge, and to remove blood stasis and relieve pain.

Indications Amenorrhea, dysmenorrhea; retention of lochia; abdominal masses; traumatic injuries, sores and ulcers with swelling and pain.

Usage and dosage 3-9 g.

Precaution Be cautious about pregnant women.

Storage Preserve in a cool and dry place, protected from moisture and moth.

Flos Caryophylli
(丁香, Dingxiang)

Clove

Clove is the dried flower bud of *Eugenia caryophyllata* Thunb. (Fam. Myrtaceae). The drug is collected when it turns from green to brick-red, and dried in the sun.

Description Pestle-shaped, 1-2 cm long. Corolla globular, 0.3-0.5 cm in diameter, petals 4, imbricated, dark brown to brownish-yellow, enclosing stamens and style. After rubbing into pieces, numerous yellow and granular anthers visible. Calyx tube cylindrical, slightly flattened, sometimes slightly curved, 0.7-1.4 cm long, 0.3-0.6 cm in diameter, reddish-brown or dark brown, sepals 4, triangular, occurring at the upper part, separating in cruciform. Texture hard, oily. Odour, strongly aromatic; taste, pungent and numb.

Identification (1) Transverse section of the middle of calyx tube: Epidermal cells 1 row, with relatively thick cuticle. Oil cavities 2-3 rows, longitudinally elongated-elliptical, 150-200 μm long, scattered in the outer part of cortex. 20-50 small bicollateral vascular bundles underneath, arranged in an interrupted ring and surrounded by few pericyclic fibres, with thickened and lignified walls. Aerenchyma consisting of several layers of parenchymatous cells, occurring in the inner part, with large intercellular space. Numerous small vascular bundles scattered in the stele parenchyma. Parenchymatous cells consisting of numerous fine clusters of calcium oxalate.
Powder: Dark reddish-brown. Fibres spindle-shaped, apex obtusely rounded, with thickened walls. Pollen grains numerous, triangular in polar view and two convex lense-shaped in equatorial surface view, with 3 furrows. Clusters of calcium oxalate numerous, 4-26 μm in diameter, occurring in relatively small parenchymatous cells. Oil cavities frequently broken, dividing lines of secretory cells indistinct, containing yellow oil.
(2) To 0.5 g of the powder add 5 ml of ether, shake for several minutes, filter, the filtrate is used as the test solution. Dissolve eugenol CRS in ether to produce a solution containing 16 μl per ml as the reference solution. Carry out the method for thin layer chromatography (Appendix Ⅵ B), using silica G as the coating substance and a mixture of petroleum ether (60-90℃)-ethyl acetate (9 : 1) as the mobile phase. Apply 5 μl of each of the two solutions to the plate. After developing and removal of the plate, dry in air, spray with 5% solutions of vanillin in sulfuric acid and heat at 105℃. The spot in the chromatogram obtained with the test solution corresponds in position and colour to the spot obtained with the reference solution.

Foreign matter Not more than 4 per cent (Appendix Ⅸ A).

Water Not more than 12.0 per cent (Appendix Ⅸ H, method 1).

Assay Carry out the method for gas chromatography (Appendix Ⅵ E).

Chromatographic system and system suitability Use 10% polyethylene glycol (PEG)-20M as the stationary phase and maintain the column temperature at 190℃. The number of theoretical plates of the column is not less than 1500, calculated with reference to the peak of eugenol.

Reference solution Dissolve a quantity of eugenol CRS,

accurately weighed, in hexane to produce a solution of 2 mg per ml.

Test solution To about 0.3 g of the powder (through No. 2 sieve), accurately weighed, add 20 ml of hexane, accurately measured, weigh and ultrasonicate for 15 minutes, allow to cool to room temperature and weigh again, replenish the loss of the solvent with hexane, mix well, and filter.

Procedure Inject accurately 1 μl of each of the two solutions into the column. Calculate the content of $C_{10}H_{12}O_2$.
It contains not less than 11.0 per cent of eugenol ($C_{10}H_{12}O_2$).

Processing Eliminate foreign matter and sift the dust. Pound to pieces before use.

Action To warm the *middle-energizer*, check adverse rise of the *stomach-qi*, and restore the *kidney yang*.

Indications Hiccuping, vomiting, poor appitite, diarrhea and epigastric and abdominal pain with cold sensation in *deficiency-cold* syndromes of the spleen and stomach; impotence due to *deficiency* of the kidney.

Usage and dosage 1-3 g.

Precaution Incompatible with Radix Curcumae.

Storage Preserve in a cool and dry place.

Flos Celosiae Cristatae (鸡冠花, Jiguanhua)

Cockcomb Flower

Cockcomb Flower is the dried capitulum of *Celosia cristata* L. (Fam. Amaranthaceae). The drug is collected on flowering in autumn, and dried in the sun.

Description Spike mostly flat and fleshy, cockcomb-shaped, 8-25 cm long, 5-20 cm wide. The upper margin broad, bearing folds and dense linear scales, narrowed towards the base, often with remaining flat stem. Externally red, purplish-red or yellowish-white; aggregating numerous florets below the middle. Persistent bracts and perianth-segment of the florets membranous. Fruit dehiscent by lid, seeds oblate, kidney-shaped, black, lustrous. Texture light and pliable. Odour, slight; taste, weak.

Identification To 2 g of the chips add 30 ml of ethanol, heat under reflux for 30 minutes, filter and evaporate the filtrate to dryness. Dissolve the residue in 2 ml of ethanol as the test solution. Prepare the reference drug solution using 2 g of Flos Celosiae Cristatae reference drug treated in the same manner. Carry out the method for thin-layer chromatography (Appendix Ⅵ B), using silica gel G as the coating substance and a mixture of cyclohexane and acetone (5 : 1) as the mobile phase. Apply separately to the plate 2 μl of each of the above two solutions. After developing and removal of the plate, dry in air, spray with a 5% solution of vanillin in sulfuric acid and heat to the spots clear. The spots in the chromatogram obtained with the test solution corresponds in position and colour to the spots obtained with the reference drug solution.

Processing *Flos Celosiae Cristatae* Eliminate foreign matter and remains of stems, cut into sections.

Flos Celosiae Cristatae (carbonized) Stir-bake the sections of Flos Celosiae Cristatae as described under the method for carbonizing by stir-baking (Appendix Ⅱ D) until it becomes charred-black.

Action To arrest discharge (bleeding, leukorrhea and diarrhea) as an astringent.

Indications Hematemesis, metrorrhagia and metrostaxis, hematochezia, hemorrhoidal bleeding, morbid leukorrhea, chronic dysentery with persistent diarrhea.

Usage and dosage 6-12 g.

Storage Preserve in a ventilated dry place.

Flos Chrysanthemi (菊花, Juhua)

Chrysanthemun Flower

Chrysanthemum Flower is the dried capitulum of *Chrysanthemum morifolium* Ramat. (Fam. Compositae). The drug is collected in batches in September to November on flowering, dried in shade or by baking or dried in the sun after fuming and steaming. It is classified into "Boju", "Chuju", "Gongju" and "Hangju" according to different localities of production and variations in processing methods.

Description *Boju* Obconical or cylindrical, sometimes slightly compressed to fan-shape, 1.5-3 cm in diameter, separated. Involucre dish-shaped; bracts 3-4 layers, ovate or elliptical, herbaceous, yellowish-green or brownish-green, the outer surface covered with white hairs, margin membranous. Receptacle hemispherical, without paleas or palea hairs. Ligulate florets several rows, female, marginal, whitish, strongly straight and upward, longitudinally folded and wrinkled. Golden glandular spots scattered; tubular florets abundant, hermaphrodite, occurring in the centre, concealed by the ligulate florets, yellow, with 5 terminal teeth. Achenes undeveloped, pappus absent. Texture light and soft, lax and brittle when dried. Odour, pleasant and aromatic; taste, sweet, slightly bitter.

Chuju Irregularly spherical or oblate, 1.5-2.5 cm in diameter; ligulate florets whitish, irregularly twisted, curved inward, margin wrinkled, sometimes pale brown glandular spots visible; tubular florets mostly concealed.

Gongju Obiate or irregularly spherical, 1.5-2.5 cm in diameter; ligulate florets white or whitish, obliquely upward, the upper part folded outward, margin slightly curved inward and wrinkled, glandular spots usually absent; tubular florets few, exposed.

Hangju Dish-shaped or oblate, 2.5-4 cm in diameter, often several connected forming plates, ligulate florets whitish or yellow, spread flatly or folded slightly, agglutinated to each other, glandular spots usually absent; tubular florets abundant, exposed.

Identification To 1 g of the chips add 20 ml of petroleum ether (30-60℃), ultrasonicate for 10 minutes, discard petroleum ether, evaporate the drug residue to dryness, add 1 ml of dilute hydrochloric acid and 50 ml of ethyl acetate, ultrasonicate for 30 minutes, filter and evaporate the filtrate to dryness. Dissolve the residue in 2 ml of methanol as the test solution. Dissolve chlorogenic acid CRS in ethanol to produce a solution of 0.5 mg per ml as the reference solution. Carry out the method for thin-layer chromatography (Appendix Ⅵ B), using polyamide membrane as the coating substance and the upper layer of a

mixture of toluene-ethyl acetate-formic acid-glacial acetic acid-water (2 : 30 : 2 : 2 : 4) as the mobile phase. Apply separately to the plate 0.5-1 μl of each of the above two solutions After developing and removal of the plate, dry in air, and examine under ultra-violet light at 365 nm. The spot in the chromatogram obtained with the test solution corresponds in position and colour to the spot obtained with the reference solution.

Assay Carry out the method for high performance liquid chromatography (Appendix Ⅵ D).

Chromatographic system and system suitability Use octadecylsilane bonded silica gel as the stationary phase and a mixture of 0.1 mol/L sodium dihydrogen phosphate buffer [Dissolve 15.6 g of sodium dihydrogen phosphate ($NaH_2PO_4 \cdot 2H_2O$) in water to produce 1000 ml, add a quantity of phosphoric acid to adjust pH to 2.7] and methanol (70 : 30) as the mobile phase. As detector a spectrophotometer set at 328 nm. The number of theoretical plates of the column is not less than 2500, calculated with reference to the peak of chlorogenic acid.

Reference solution Dissolve a quantity of chlorogenic acid CRS, accurately weighed, in water in an amber coloured volumetric flask, to produce a solution of 0.1 mg per ml. (Stored at the temperature below 10℃.)

Test solution Weigh accurately 1 g of the powder (through No. 1 sieve) in a conical flask, add 50 ml of methanol, accurately measured, weigh accurately to 0.01 g and heat under reflux for 2 hours, allow it to cool and weigh again, make up the loss in weight with methanol to the initial weight and mix well. Filter, measure accurately 10 ml of the successive filtrate and evaporate to dryness. To the residue add 5 ml of chloroform, macerate for 3 minutes, discard the chloroform layer. Expel chloroform, dissolve the residue in a quantity of water, transfer to a 5 ml volumetric flask, add water to volume and shake thoroughly. The test solution should be tested within day.

Procedure Inject 10 μl of each of the two solutions, both accurately measured, into the column and calculate the content.

It contains not less than 0.20 per cent of chlorogenic acid ($C_{16}H_{18}O_9$), calculated with reference to the dried drug.

Action To dispel *wind-heat*, pacify hyperactivity of the liver, and improve eyesight.

Indications *wind-heat* due to common cold, headache and dizziness; inflammation of the eyes; blurred vision.

Usage and dosage 5-9 g.

Storage Preserve in well closed containers, stored in a cool and dry place, protected from mould and moth.

Flos Chrysanthemi Indici (野菊花, Yejuhua)

Wild Chrysanthemum Flower

Wild Chrysanthemum Flower is the dried capitulum of *Chrysanthemum indicum* L. (Fam. Compositae). The drug is collected at the early stage of flowering in autumn and winter, and dried in the sun or dried after steaming.

Description Subspherical, 0.3-1 cm in diameter, brownish-yellow. Involucre consisting of 4-5 rows of bracts, the outer bracts oval or strip-shaped, the middle part of the outer surface greyish-green or pale brown in the centre, often covered with white hairs, margin scarious; the inner bracts elongated-elliptical, scarious, hairs absent on the outer surface. Remaining pedicel at the base of involucre. Ligulate florets 1 whorl, yellow, crumpled and rolled; tubular florets numerous, deep yellow. Texture light. Odour, aromatic; taste, bitter.

Identification To 0.3 g of the powder add 15 ml of methanol, ultrasonicate for 30 minutes, cool and filter, use the filtrate as the test solution. Prepare a solution of 0.3 g of Flos Chrysanthemi Indici reference drug in the same manner as the reference drug solution. Dissolve buddleoside CRS in methanol to produce a solution of 0.2 mg per ml as the reference solution. Carry out the method for thin-layer chromatography (Appendix Ⅵ B), using polyamide membrane as the coating substance and a mixture of ethyl acetate-butanone-chloroform-formic acid-water (15 : 15 : 6 : 4 : 1) as the mobile phase. Apply separately to the plate 3 μl of each of the above three solutions. After developing and removal of the plate, dry in hot air, spray with 2% aluminium muriate, dry in hot air and examine under ultra-violet light at 365 nm. The fluorescent spot in the chromatogram obtained with the test solution corresponds in position and colour to the spot obtained with the reference drug solution and the spot obtained with the reference solution.

Water Not more than 14.0 per cent (Appendix Ⅸ H, method 1).

Total ash Not more than 9.0 per cent (Appendix Ⅸ K).

Acid-insoluble ash Not more than 2.0 per cent (Appendix Ⅸ K).

Assay Carry out the method for high performance liquid chromatography (Appendix Ⅵ D).

Chromatographic system and system suitability Use octadecylsilane bonded silica gel as the stationary phase and a mixture of methanol, water and glacial acetic acid (52 : 46 : 2) as the mobile phase. As detector a spectrophotometer set at 334 nm. The number of theoretical plates of the column is not less than 3000, calculated with reference to the peak of buddleoside CRS.

Reference solution Dissolve a quantity of buddleoside CRS, dried previously over phosphorous pentoxide in vacuum (50℃) to constant weight and weighed accurately, in methanol (heat if necessary) to produce a solution of 25 μg per ml.

Test solution Weigh accurately 0.25 g of the powder (through No. 3 sieve) in a conical flask with stopper, add 100 ml of methanol, accurately measured, weigh accurately and heat under reflux for 3 hours, allow to cool and weigh again, replenish the loss of the solvent with methanol, and mix well. Filter with a microporous filter membrane of 0.45 μm and use the successive filtrate as the test solution.

Procedure Inject accurately 20 μl of each of the two solutions into the column, and calculate the content.

It contains not less than 0.80 per cent of buddleoside ($C_{28}H_{32}O_{14}$), calculated with reference to the dried drug.

Action To remove toxic *heat*.

Indications Boils, carbuncles, inflammation of the eyes, headache and dizziness.

Usage and dosage 9-15 g; for external use, appropriate quantity to be made into decoction for washing or made into ointment for topical application.

Storage Preserve in a cool and dry place, protected from moisture and moth.

Flos Daturae
(洋金花, Yangjinhua)

Datura Flower

Datura Flower is the dried flower of *Datura metel* L. (Fam. Solanaceae). The drug is collected in April to November at the beginning of flowering, dried in the sun or at a low temperature.

Description Usually crumpled and strip-shaped, when whole, 9-15 cm long. Calyx tubular, 2/5 in length of corolla, greyish-green or greyish-yellow, apex 5-lobed, with 5 longitudinal veins at the base, surface slightly pubescent; corolla trumpet-shaped, pale yellow or yellowish-brown, apex slightly 5 lobed, lobes short acuminate, with 3 distinct longitudinal veins below the acumination, slightly sunken between two lobes; stamens 5, filaments adnate to the corolla tube, 3/4 in length of corolla; pistil 1, stigma stick-shaped. Texture of samples by heat dried, pliable; odour, characteristic. That of sun-dried sample, fragile. Odour, slight; taste, slightly bitter.

Identification (1) Powder: Pale yellow. Pollen grains subspherical or oblong, 42-65 μm in diameter, with striate sculptures. Non-glandular hairs of calyx 1-3 celled, with warts on the walls. Glandular hairs each with a 1-5 celled head and a 1-5 celled stalk. Non-glandular hairs on the edge of corolla lobe, 1-10 celled, with slightly warty prominences on the walls. Non-glandular hairs on the base of filament, thick, 1-5 celled, up to 128 μm in diameter at the base, apex obtusely rounded. Sand crystals, prisms and clusters of calcium oxalate occurring in the parenchymatous cells of corolla and calyx.

(2) To 1 g of the powder add 1 ml of concentrated ammonia TS, mix well, add 25 ml of chloroform, stir well. Allow to stand over night, filter, evaporate the filtrate to dryness. Dissolve the residue in 1 ml of chloroform, use the solution as the test solution. Dissolve atropine sulfate CRS and scopolamine hydrobromide CRS in methanol to produce a solution containing 4 mg each per ml as the reference solution. Carry out the method for thin-layer chromatography (Appendix Ⅵ B), using silica gel G as the coating substance and a mixture of ethyl acetate-methanol-concentrated ammonia TS (17 : 2 : 1) as the mobile phase. Apply 10 μl of each of the two solutions to the plate. After developing and removal of the plate, dry in air, spray with dilute potassium iodobismuthate TS. The spots due to atropine and scopolamine in the chromatogram obtained with the test solution correspond in position and colour to those obtained with the reference solution.

Water Not more than 11.0 per cent (Appendix Ⅸ H, method 1).

Total ash Not more than 11.0 per cent (Appendix Ⅸ K).

Acid-insoluble ash Not more than 2.0 per cent (Appendix Ⅸ K).

Extractives Carry out the hot extraction method for determination of ethanol-soluble extractives (Appendix Ⅹ A), not less than 9.0 per cent.

Assay Carry out the method for high performance liquid chromatography (Appendix Ⅵ D).

Chromatographic system and system suitability Use octadecylsilane bonded silica gel as the stationary phase and a mixture of acetonitrile and 0.07 mol/L sodium phosphate buffer (containing 0.0175 mol/L sodium dodecyl sulfonate, adjust pH to 6.0 with phosphoric acid) (50 : 100) as the mobile phase. As detector a spectrophotometer set at 216 nm. The number of theoretical plates of the column is not less than 3000, calculated with reference to the peak of scopolamine hydrobromide.

Reference solution Weigh accurately a quantity of scopolamine hydrobromide CRS and dissolve in the mobile phase to produce a solution of 0.5 mg per ml (The weight of scopolamine equals to that of scopolamine hydrobromide divided by 1.445).

Test solution Weigh accurately 1 g of the powder (through No. 3 sieve) in a conical flask, add 10 ml of 2 mol/L hydrochloric acid, and ultrasonicate (power, 250 W; frequency, 40 kHz) for 30 minutes, cool and filter, wash the residue and the filter with 10 ml of 2 mol/L hydrochloric acid in portions, combine the filtrates and washings, adjust pH to 9.0 with concentrated ammonia TS, extract by shaking with four 10-ml quantities of chloroform, combine the chloroform extracts, recover chloroform to dryness. Dissolve the residue in the mobile phase, transfer to a 5 ml volumetric flask, dilute to volume and mix well.

Procedure Inject accurately 10 μl of each of the two solutions into the column and calculate the content.

It contains not less than 0.15 per cent of scopolamine ($C_{17}H_{21}NO_4$), calculated with reference to the dried drug.

Action To relieve asthma and cough, alleviate pain, and arrest spasm.

Indications Asthma and cough; epigastric pain with cold sensation; rheumatic arthralgia; chronic infantile convulsions; anesthesia for surgical operation.

Usage and dosage 0.3-0.6 g, mostly used in pills or powder. It can be put into a cigarette-like roll for smoking (daily dose not exceeding 1.5 g). Appropriate quantity for external use.

Precaution Contraindicated in patients with cough and asthma caused by afflications from exterior pathogenic feature or *phlegm-heat*, glaucoma, hypertension, or tachycardia.

Storage Preserve in a dry place, protected from mould and moth.

Flos Eriocauli
(谷精草, Gujingcao)

Pipewort Flower

Pipewort Flower is the dried capitulum with peduncle of *Eriocaulon buergerianum* Koern. (Fam. Eriocaulaceae). The drug is collected in autumn, the capitulum is picked up with peduncle, and dried in the sun.

Description Capitulum hemispherical, 4-5 mm in diameter. Bracts densely arranged in numerous layers at the base, pale yellowish-green, lustrous, densely pubescent at the upper margin. The top of the capitulum greyish-white. After rubbing, numerous black anthers and fine, yellowish-green, unripe fruits visible. Peduncles slender, varying in length, less than 1 mm in diameter, pale yellowish-green, bearing numerous twisted ridges. Texture pliable. Odour, slight; taste, weak.

Identifcation (1) Powder: Yellowish-green. The head of glandular hair long elliptical, 1-4 celled, surface bearing densely fine reticulate striations; Stalk unicellular, Non-glandular hairs extremely long, 2-4 celled. Epidermal cells of seed coat flat-long-haxagonal in surface view, walls bearing derivative umbrella-shaped pillar. Epidermal cells of

peduncle stripe-shaped in surface view, surface bearing longitudinal cutin striations, stomata sub-rectangular. Pericarp cells subpolygonal in surface view, anticlinal walls bead-like thickened. Pollen grains subrounded, bearing spiral-shaped germinal aperture.

(2) To 1 g of the powder add 30 ml of ethanol, ultrasonicate for 30 minutes, filter and evaporate the filtrate to dryness. Dissolve the residue in 1 ml of ethanol as the test solution. Prepare a solution of 1 g of Flos Eriocauli reference drug in the same manner as the reference drug solution. Carry out the method for thin-layer chromatography (Appendix Ⅵ B), using silica gel G containing sodium carboxymethylcellulose as the coating substance and a mixture of toluene-acetone (10 : 0.6) as the mobile phase. Apply separately to the plate 5 μl of each of the above two solutions. After developing and removal of the plate, dry in air, and examine under ultraviolet light at 365 nm. The fluorescent spots in the chromatogram obtained with the test solution corresponds in position and colour to the spots obtained with the reference drug solution.

Processing Eliminate foreign matter, cut into sections.

Action To disperse *wind-heat*, improve vision and remove nebula.

Indications Inflammation of the eyes with photophobia and headache caused by *wind-heat*, nebula.

Usage and dosage 4.5-9 g.

Storage Preserve in a ventilated and dry place.

Flos Farfarae (款冬花, Kuandonghua)

Common Coltsfoot Flower

Common Coltsfoot Flower is the dried flower bud of *Tussilago farfara* L. (Fam. Compositae). The drug is collected in December or before the ground is frozen while the flower is still under the ground, removed from pedicels and soil, and dried in shade.

Description Long clavate. Solitary or 2-3 accreted at the base, 1-2.5 cm long, 0.5-1 cm in diameter. The upper part broader and the lower part gradually slender or pedicelled, enclosed by numerous scaly bracts. The outer surface of bracts purplish-red or pale red, inner surface densely covered with white flocky hairs. Light, showing white hairs after ripping. Odour, aromatic; taste, slightly bitter and pungent.

Processing *Flos Farfarae* Eliminate foreign matter and residual pedicels.

Flos Farfarae (processed with honey) Stir-bake the clean Flos Farfarae as described under the method for stir-baking with honey (Appendix Ⅱ D) until it is no longer sticky to fingers.

Action To relieve cough and resolve phlegm, moisture the lung, cheek adverse rise of the *lurg-qi*.

Indications Acute or chronic cough with dyspnea and copious expectoration of phlegm; hemoptysis in consumptive diseases.

Usage and dosage 5-9 g.

Storage Preserve in a dry place, protected from moisture and moth.

Flos Genkwa (芫花, Yuanhua)

Lilac Daphne Flower Bud

Lilac Daphne Flower Bud is the dried flower bud of *Daphne genkwa* Sieb. et Zucc. (Fam. Thymelaeaceae). The drug is collected in spring before flowering, removed from foreign matter, and dried.

Description Usually 3-7 flowers, subtended by 1-2 bracts, in clusters on shoots, mostly fallen off and a single flower remained, clavate, frequently curved, 1-1.7 cm long, about 1.5 mm in diameter; perianth tube purplish or greyish-green externally, densely pubescent, 4-lobed at the apex, lobes purplish or yellowish-brown. Texture soft. Odour, slight; taste, sweet and slightly pungent.

Identification (1) In surface view: Pollen grains yellow, subspherical, 23-45 μm in diameter, exine with distinct reticulate sculptures. Lower surface of perianth bearing non-glandular hairs, unicellular, usually curved, 88-780 μm long, 15-23 μm in diameter, walls relatively thick, slightly warty.

(2) To 1 g of the powder add 20 ml of petroleum ether (30-60℃), ultrasonicate for 30 minutes, filter and evaporate the filtrate to dryness. Dissolve the residue in 1 ml of ethanol as the test solution. Prepare the reference drug solution using 1 g of Flos Genkwa reference drug treated in the same manner. Carry out the method for thin-layer chromatography (Appendix Ⅵ B), using silica gel G as the coating substance and a mixture of benzene and ethyl acetate (10 : 1) as the mobile phase. Apply separately to the plate 5 μl of each of the above two solutions. After developing and removal of the plate, dry in air, and examine under ultra-violet light at 365 nm. The sapphire fluorescent spot in the chromatogram obtained with the test solution corresponds in position and colour to the spot obtained with the reference drug solution.

Processing *Flos Genkwa* Eliminate foreign matter.

Flos Genkwa (processed with vinegar) Stir-bake the clean Flos Genkwa as described under the method for sitr-baking with vinegar (Appendix Ⅱ D) until vinegar is absorbed entirely, using 30 kg of vinegar per 100 kg of Flos Genkwa.

Action To cause drastic purgation and expel the retained fluid, and remove the toxic substance from the interior of the body and eliminate fungi.

Indications Anasarca, hydrothorax and ascites with dyspnea, constipation and oliguria; external use for scabies, tinea and frostbite.

Usage and dosage 1.5-3 g.
Flos Genkwa (processed with vinegar) To be ground into powder, 0.6-0.9 g, once a day.

Precaution Contraindicated in pregnancy. Incompatible with Radix Glycyrrhizae.

Storage Preserve in a ventilated dry place, protected from mould and moth.

Flos Inulae
(旋覆花, Xuanfuhua)

Inula Flower

Inula Flower is the dried capitulum of *Inula japonica* Thunb. or *Inula britannica* L. (Fam. Compositae). The drug is collected in summer and autumn at flowering, removed from foreign matter, and dried in the shade or in the sun.

Description Oblate or subspherical, 1-2 cm in diameter. Involucre consisting of numerous bracts, imbricated; bracts lanceolate or strip-shaped, greyish-yellow, 4-11 mm long; Sometimes pedicels remaining at the base of involucre, surfaces of the bracts and pedicel covered with white hairs. Ligulate florets 1 row, yellow, about 1 cm long, mostly rolled, often fallen, with 3 terminal teeth; tubular florets numerous, brownish-yellow, about 5 mm long, with 5 terminal teeth; numerous white pappi occurring at the apex of ovary, 5-6 mm long. Small elliptical achene sometimes visible. Texture light, easily broken and separated. Odour, slight; taste, slightly bitter.

Identification (1) Surface view of various parts: Non-glandular hairs of bracts 1-8 celled, base of the multicellular ones large and the apical cell especially long; the inner rows of bracts bearing 2-3 celled seriate non-glandular hairs. Pappus consisting of multiseriate non-glandular hairs, margin cells slightly convex. Epidermal cells of ovary containing cylindrical crystals of calcium oxalate, up to 48 μm long, 2-5 μm in diameter; non-glandular hairs of ovary biserrated, one unicellular and the other often bicellular, 90-220 μm long. Glandular hairs of bracts and corolla clavate, with a multi-cellular head, mostly biseriate, covered with cuticle sac; stalk multicellular, biseriate. Pollen grains subspherical, 22-33 μm in diameter, exine spiny, about 3 μm long, with 3 germinal pores.
(2) To 2 g of the powder in a conical flask with stopper add 30 ml of petroleum ether (60-90℃), stopper tightly and macerate for 1 hour, heat under reflux for 30 minutes, cool, filter and concentrate the filtrate to nearly dryness. Dissolve the residue in 2 ml of petroleum ether (60-90℃) as the test solution. Prepare the reference drug solution using 2 g of Flos Inulae reference drug treated in the same manner. Carry out the method for thin-layer chromatography (Appendix Ⅵ B), using silica gel G as the coating substance and a mixture of petroleum ether (60-90℃) and ethyl acetate (5 : 1) as the mobile phase. Apply separately to the plate 5 μl of each of the above two solutions. After developing and removal of the plate, dry in air, spray with a 5% solution of vanillin in sulfuric acid and heat to the spots clear. The principal spot in the chromatogram obtained with the test solution corresponds in position and colour to the spot obtained with the reference drug solution.

Processing *Flos Inulae* Eliminate pedicels, leaves and other foreign matter.

Flos Inulae (*processed with honey*) Stir-bake the clean Flos Inulae as described under the method for stir-baking with honey (Appendix Ⅱ D) until it is no longer sticky to fingers.

Action To bring *qi* down, eliminate phlegm, promote diuresis, and arrest vomiting.

Indications Cough in common cold; cough with dyspnea and copious expectoration due to accumulation of phlegm; belching, nausea and vomiting with stuffiness sensation in the chest and epigastric region.

Usage and dosage 3-9 g, decoeted with wrapping.

Storage Preserve in a dry place, protected from moisture.

Flos Lonicerae
(山银花, Shanyinhua)

Honeysuckle Flower

Honeysuckle Flower is the dried flower bud or opening flower of *Lonicera hypoglauca* Miq., *Lonicera confusa* DC., or *Lonicera macranthoides* Hand.-Mazz. (Fam. Caprifoliaceae). The drug is collected before flowering in early summer, and dried.

Description *Flower of Lonicera macranthoides* Clavate, slightly curved, 3-4.5 cm long, about 2 mm in diameter in upper part and 1 mm in diameter in lower part. Externally greenish-brown or yellowish-white. Flowers grouped in clusters, the length of lobes of corolla shorter than the 1/2 of the whole length of opened flowers. Texture slightly hard and springy. Odour, delicately aromatic; taste, slightly bitter and sweet.

Flower of Lonicera confusa 1.6-3.5 cm long, 0.5-2 mm in diameter. Calyx tube and corolla densely covered with grayish-white hairs. Ovary hairy.

Flower of Lonicera hypoglauca 2.5-4.5 cm long, 0.8-2 mm in diameter. externally yellowish-white to yellowish-brown, glabrous of sparsely pubescent. Calyx tube glabrous, 5-lobed at the apex, lobes long-triangular, pubescent. The lower lip of corolla recurved when open. Style glabrous.

Identification To 0.2 g of the powder add 5 ml of methanol, macerate for 12 hours, filter, the filtrate is used as test solution. Dissolve chlorogenic acid CRS in methanol to produce a solution containing 1 mg per ml as the reference solution. Carry out the method for thin layer chromatography (Appendix Ⅵ B), using silica gel H containing sodium carboxymethylcellulose as the coating substance and the upper layer of the mixture of butylacetate, formic acid and water (7 : 2.5 : 2.5) as the mobile phase. Apply separately to the plate 10-20 μl of the test solution and 10 μl of the reference solution. After developing and removal of the plate, dry in air, and examine under ultraviolet light at 365 nm. The fluorescent spot in the chromatogram obtained with the test solution corresponds in position and colour to the fluorescent spot obtained with the reference solution.

Water Carry out the method for the determination of water (Appendix Ⅸ H, method 1), not more than 15.0 per cent.

Total ash Not more than 10.0 per cent (Appendix Ⅸ K).

Acid-insoluble ash Not more than 3.0 per cent (Appendix Ⅸ K).

Assay Carry out the method for high performance liquid chromatography (Appendix Ⅵ D).

Chromatographic system and system suitability Use octadecylsilane bonded silica gel as the stationary phase, a mixture of acetonitrile and 0.4% phosphoric acid solution (12 : 88) as the mobile phase. As detector a spectrophotometer set at 327 nm. The number of theoretical plates of the column is not less than 1000, calculated with the reference to the peak of chlorogenic acid CRS.

Reference solution Weigh accurately a quantity of chlorogenic

acid CRS in an amber volumetric flask, add 50% methanol to produce a solution containing 40 μg per ml as the reference solution.

Test solution Weigh accurately 0.5 g of the coarse powder (pass through No. 4 sieve) to a stopper conical flask, add accurately 50 ml of 50% methanol, weigh and ultrasonicate for 30 minutes (power, 250 W; frequency, 35 kHz), cool, weigh again and restore the originat weight with 50% methanol to the initial weight, and mix well. Filter, measure accurately 5 ml of the successive filtrate in a 25 ml amber volumetric flask, add 50% methanol to add 10 ml of methanol to the residue, extract again for one time as the same manner. Transfer the filtrate to a 25 ml volumetric flask, wash the container with a quantity of methanol for two times, filter the washings to the same flask, dilute with methanol to volume. Mix well, filter through millipore membrane (0.45 μm), use the successive filtrate as the test solution.

Procedure Inject accurately 10 μl of the reference solution and the test solution into the column respectively, determine, and calculate the content.
It contains not less than 0.080 per cent of l-pulegone ($C_{10}H_{16}O$), calculated with reference to the dried drug.

Action To clear toxic *heat*, eliminate *wind-heat* with herbs cool in property.

Indications Carbuncles and sores, laryngalgia, erysipelas, bloody dysentery due to *toxic-heat*, common cold due to *wind-heat* and warm diseases.

Usage and dosage 6-15g.

Storage Preserve in a cool and dry place, protected from moisture and moth.

Flos Lonicerae Japonicae (金银花, Jinyinhua)

Japanese Honeysuckle Flower

Honeysuckle Flower is the dried flower bud or opening flower of *Lonicera japonica* Thunb. (Fam Capri-foliaceae). The drug is collected before flowering in early summer, and dried.

Description Clavate, stout in upper part and tapered downwards, slightly curved, 2-3 cm long, about 3 mm in diameter in upper part and 1.5 mm in diameter in lower part. Externally yellowish-white or greenish-white, gradually darken on keeping, densely pubescent. Foliaceous bracts occasionally visible. Calyx green, 5-lobed at the apex, lobes pubescent, about 2 mm long. Corolla tubular when open, apex 2-lipped; stamens 5, epipetalous, yellow; pistil 1, ovary glabrous. Odour, delicately aromatic; taste, weak and slightly bitter.

Identification To 0.2 g of the powder add 5 ml of methanol, macerate for 12 hours, filter, the filtrate is used as test solution. Dissolve chlorogenic acid CRS in methanol to produce a solution containing 1 mg per ml as the reference solution. Carry out the method for thin layer chromatography (Appendix Ⅵ B), using silica gel H containing sodium carboxymethylcellulose as the coating substance and the upper layer of butylacetate-formic acid-water (7∶2.5∶2.5) as the mobile phase. Apply separately to the plate 10-20 μl of the test solution and 10 μl of the reference solution. After developing and removal of the plate, dry in air, and examine under ultraviolet light at 365 nm. The fluorescent spot in the chromatogram obtained with the test solution corresponds in position and colour to the fluorescent spot obtained with the reference solution.

Water Not more than 12.0 per cent (Appendix Ⅸ H, method 1).

Total ash Not more than 10.0 per cent (Appendix Ⅸ K).

Acid-insoluble ash Not more than 3.0 per cent (Appendix Ⅸ K).

Heavy metal Carry out the limit test for Pb, Ge, As, Hg and Cu (Appendix Ⅸ B), not more than 5 ppm for Pb; not more than 3 ppb for Ge; not more than 2 ppm for As; not more than 2 ppb for Hg; not more than 20 ppm for Cu.

Assay ***Chlorogenic acid*** Carry out the method for high performance liquid chromatography (Appendix Ⅵ D).

Chromatographic system and system suitability Use octadecylsilane bonded silica gel as the stationary phase and a mixture of acetonitrile and 0.4% phosphoric acid solution (13∶87) as the mobile phase. As detector a spectrophotometer set at 327 nm. The number of theoretical plates of the column is not less than 1000, calculated with reference to the peak of chlorogenic acid CRS.

Reference solution Weigh accurately a quantity of chlorogenic acid CRS in an amber volumetric flask, add 50% methanol to produce a solution of 40 μg per ml.

Test solution Weigh accurately 0.5 g of the powder (through No. 4 sieve) in a conical flask with stopper, add 50 ml of 50% methanol, accurately measured, weigh and ultrasonicate (power, 250 W; frequency, 35 kHz) for 30 minutes; cool, weigh again and restore the original weight with 50% methanol to the initial weight and mix well. Filter, measure accurately 5 ml of the successive filtrate in a 25 ml amber volumetric flask, add 50% methanol to volume and mix well.

Procedure Inject accurately 5-10 μl of each of the two solutions into the column and calculate the content.
It contains not less than 1.5 per cent of chlorogenic acid ($C_{16}H_{18}O_9$), calculated with reference to the dried drug.

Luteolin-7-O-glucoside Carry out the method for high performance liquid chromatography (Appendix Ⅵ D).

Chromatographic system and system suitability Use octadecylsilane bonded silica gel as the stationary phase, acetonitrile as the mobile phase A, 0.5% glacial acetic acid solution as the mobile phase B, elute in gradient as the following:

Time (min)	Mobile phase A (per cent V/V)	Mobile phase B (per cent V/V)
0-30	10→30	90→70

As detector a spectrophotometer set at 350 nm. The number of theoretical plates of the column is not less than 2000, calculated with reference to the peak of luteolin-7-*O*-glucoside CRS.

Reference solution Dissolve a quantity of luteolin-7-*O*-glucoside CRS, accurately weighed, in 70% ethanol to produce a solution of 40 μg per ml.

Test solution Weigh accurately 3 g of the fine powder (through No. 4 sieve) in a conical flask with stopper, add 50 ml of 70% ethanol, accurately measured, weigh and ultrasonicate (power, 250 W; frequency, 35 kHz) for 1 hour; cool, weigh again and restore the original weight with 70% ethanol to the initial weight and mix well. Filter and use the successive filtrate as the test solution.

Procedure Inject accurately 10 μl of each of the two solutions

into the column and calculate the content.
It contains not less than 0.10 per cent of luteolin-7-*O*-glucoside ($C_{21}H_{20}O_{11}$), calculated with reference to the dried drug.

Action To remove toxic *heat* and dispel *wind-heat*.

Indications Carbuncles, boils, erysipelas, acute dysentery, pharyngitis, upper respiratory infection, epidemic febrile diseases.

Usage and dosage 6-15 g.

Storage Preserve in a cool and dry place, protected from moisture and moth.

Flos Magnoliae (辛夷, Xinyi)

Biond Magnolia Flower

Biond Magnolia Flower is the dried flower bud of *Magnolia biondii* Pamp., *Magnolia denudata* Desr. or *Magnolia sprengeri* Pamp. (Fam. Magnoliaceae). The drug is collected in late winter and early spring before flowering, removed from branchlet, and dried in the shade.

Description *Flower of Magnolia biondii* Long ovoid, like the tip of a writing brush, 1.2-2.5 cm long, 0.8-1.5 cm in diameter. Mostly the base with a pedicel, about 5 mm long, exhibiting whitish dotted lenticels. Bracts 2-3 layers, each layer 2 segments, bearing small scaly buds between 2 layers of bracts, outer surface of bract densely covered with greyish-white or greyish-green tomenta, inner surface brownish, glabrous. Perianth-segments 9, brownish, outer ones 3, stripe-shaped, about 1/4 in length of the inner ones, sepaloid, inner ones 6, arranged in 2 whorls of 3. Staments and pistils numerous, spirally arranged. Texture light and fragile. Odour, aromatic; taste, pungent, cool and slightly bitter.

Flower of Magnolia denudata 1.5-3 cm long, 1-1.5 cm in diameter. Base with a stouter pedicel, lenticels brownish. Outer surface of bract densely covered with greyish-white or greyish-green hairs. Perianth-segments 9, outer whorls and inner whorls homogeneous.

Flower of Magnolia sprengeri 2-4 cm long, 1-2 cm in diameter. Pedicels stout, lenticels red-brown. Outer surface of bract densely covered with yellowish or yellowish-green tomenta, sometimes the outermost bracts appearing blackish-brown after the hairs fallen off. Perianth-segments 10-12-15, less differentiated between the outer and inner whorls.

Identification (1) Powder: greyish-green or slightly yellowish-green. Non-glandular hairs numerous, scattered and frequently broken. 2-4 celled when whole, unicellular also exist, 4-13 μm thick, the basal cells short and thick, obviously inflated, heavily thick-walled, like stone cells. Stone cells grouped, elliptical, irregular or branched, 4-20 μm thick, with obliterated pit canals; brownish-yellow secretion contained in cell. Oil cells, numerous, subrounded, some containing little oil droplets. Epidermal cells of perianth-segments flat-squared, anticlinal wall beaded.
(2) To 1 g of the coarse powder add 10 ml of chloroform, stopper tightly and ultrasonicate for 30 minutes, filter and evaporate the filtrate to dryness. Dissolve the residue in 2 ml of chloroform as the test solution. Dissolve magnolin CRS in methanol to produce a solution of 1 mg per ml as the reference solution. Carry out the method for thin-layer chromatography (Appendix VI B), using silica gel H containing sodium carboxymethylcellulose as the coating substance and a mixture of chloroform and ether (5 : 1) as the mobile phase. Apply separately to the plate 2-10 μl of each of the above two solutions. After developing and removal of the plate, dry in air, spray with a 10% sulfuric acid in ethanol, heat at 90℃ to the spots clear. The purplish-red spot in the chromatogram obtained with the test solution corresponds in position and the colour to the spot obtained with the reference solution.

Water Not more than 18.0 per cent (Appendix IX H, method 4).

Assay ***Volatile oil*** Carry out the method for determination of volatile oil (Appendix X D).
It contains not less than 1.0 per cent (ml/g) of volatile oil.

Magnolin Carry out the method for high performance liquid chromatography (Appendix VI D).

Chromatographic system and system suitability Use octylsilane bonded silica gel as the stationary phase and a mixture of acetonitrile, tetrahydrofuran and water (35 : 1 : 64) as the mobile phase. As detector a spectrophotometer set at 278 nm. The number of theoretical plates of the column is not less than 9000, calculated with reference to the peak of magnolin.

Reference solution Weigh accurately a quantity of magnolin CRS, previously dried in vacuum to constant weight at 60℃, add methanol to produce a solution of 0.1 mg per ml.

Test solution To about 1 g of the coarse powder, accurately weighed, in a conical flask with stopper, add 20 ml of ethyl acetate, accurately measured, weigh and macerate for 30 minutes, ultrasonicate (power, 250 W; frequency, 33 kHz) for 30 minutes, cool and weigh again, make up the loss in weight with methanol to the initial weight, mix well. Filter and transfer 3 ml of the successive filtrate, accurately measured, to the pretreated neutral aluminium oxide column (100-200 mesh, 2 g, 9 mm in internal diameter, filled with the neutral aluminium oxide using wet method, washed previously with 5 ml of ethyl acetate). Elute with 15 ml of methanol, collect the elute in a 25 ml volumetric flask; add methanol to volume and mix well, filter with a microporous filter membrane of 0.45 μm and use the filtrate as the test solution.

Procedure Inject 4-10 μl of each of the reference solution and the test solution respectively, accurately measured, into the column, determine and calculate the content.
It contains not less than 0.40 per cent of magnolin ($C_{23}H_{28}O_7$), calculated with reference to the dried drug.

Action To dispel *wind-cold* and relieve nasal obstruction.

Indications Headache and nasal obstruction due to exterior *wind-cold*; sinusitis with purulent discharge.

Usage and dosage 3-9 g; appropriate quantity for external use.

Storage Preserve in a cool and dry place.

Flos Magnoliae Officinalis (厚朴花, Houpohua)

Officinal Magnolia Flower

Officinal Magnolia Flower is the dried flower bud of *Magnolia officinalis* Rehd. et Wils. or *Magnolia officinalis* Rehd. et Wils. var. *biloba* Rehd. et

Wils (Fam. Magnoliaceae). The drug is collected in spring before flowering, steamed briefly, and dried in the sun or at a low temperature.

Description Long conical, 4-7 cm long, 1.5-2.5 cm in diameter at the base. Reddish-brown to brown. Usually perianth-segments 12, fleshy, the ones of outer whorle rectangular-obovate, the ones of inner whorle spatulate. Stamens numerous, anthers linear, yellowish-brown, filaments broad and short. Carpels numerous, free, spirally aggregated on a conical receptacle. Pedicels 0.5-2 cm long, densely covered with greyish-yellow tomenta, occasionally glabrous. Texture fragile, breakable. Odour, aromatic; taste, weak.

Identification (1) Powder: Reddish-brown. Epidermal cells of perianth-segments polygonal or elliptical, surface densely warty and some finely striated. Stone cells numerous, irregularly branched, with distinctly pitted walls, 7-13 μm thick, and a large lumen. Oil cells subrounded or elliptical, 37-85 μm in diameter, slightly thick-walled, containing yellowish-brown contents. Pollen grains elliptical, 48-68 μm in long diameter, 37-48 μm in short diameter, anasulcate, exine with fine reticulate sculptures. Non-glandular hairs consisting of 1-3 cells, 820-2300 μm long, the walls heavily thickened, sometimes surface showing spiral-cuticular striations, unicellular hairs acuminate at the apex, slightly inflated at the base; the basal cells of multicellular hairs relatively short or obviously inflated, thin-walled.

(2) To 1 g of the powder add 8 ml of methanol, stopper tightly and shake for 30 minutes, filter, use the filtrate as the test solution. Dissolve magnolol CRS and honokiol CRS in methanol to produce a solution containing 1 mg of each per ml as the reference solution. Carry out the method for thin layer chromatography (Appendix Ⅵ B) using silica gel G as the coating substance and a mixture of benzene and methanol (27 : 1) as the mobile phase. Apply separately 5 μl of each of the above two solutions to the plate. After developing and removal of the plate, dry in air, spray with 1% solution of vanillin in sulfuric acid, dry at 100℃ for about 10 minutes. The spots in the chromatogram obtained with the test solution correspond in colour and position to the spots in the chromatogram obtained with the reference solution.

Assay Carry out the method for high performance liquid chromatography (Appendix Ⅵ D)

Chromatographic system and system suitability Use octadecylsilane bonded silica gel as the stationary phase and a mixture of methanol, acetonitrile and water (50 : 20 : 30) as the mobile phase. As detector a spectrophotometer set at 294 nm. The number of theoretical plates of the column is not less than 1500, calculated with reference to the peak of magnolol.

Reference solution Dissolve a quantity of magnolol CRS and honokiol CRS, accurately weighed, in methanol to produce two solutions containing 60 μg of magnolol and 40 μg of honokiol per ml respectively.

Test solution Weigh accurately 1 g of the coarse powder in a conical flask with stopper, add 25 ml of methanol, accurately measured, stopper tightly and weigh, ultrasonicate for 30 minutes, allow it to cool and weigh again, make up the loss in weight with methanol to the initial weight and mix well, and allow to stand for 30 minutes. Filter the supernatant liquid with a microporous filter membrane of 0.45 μm and use the filtrate as the test solution.

Procedure Inject 10 μl of each of the two reference solutions and the test solution, accurately measured, into the column. Calculate the total content of magnolol ($C_{18}H_{18}O_2$) and honokiol ($C_{18}H_{18}O_2$).

It contains not less than 0.20 per cent of the total amount of magnolol ($C_{18}H_{18}O_2$) and honokiol ($C_{18}H_{18}O_2$).

Action To regulate *qi* flow and resolke *damp*.

Indications Feeling of stuffiness and distension in the chest and epigastrium with loss of appetite.

Usage and dosage 3-9 g.

Storage Preserve in a dry place, protected from mould and moth.

Flos Mume
(梅花, Meihua)

Plum Flower

Plum Flower is the dried flower bud of *Prunus mume* (Sieb.) Sieb. et Zucc. (Fam. Rosaceae). The drug is collected before flowering in early spring, and dried in time at a low temperature.

Description Subspherical, 3-6 mm in diameter, with short pedicle. Bracts consisting of numerous layers, scaly, brown. Calyx 5, greyish-green or brownish-red. Petals 5 or numerous, yellowish-white or pale pink. Stamens numerous; pistil 1, ovary densely pubescent. Texture light. Odour, delicately aromatic; taste, slightly bitter and astringent.

Action To regulate the stomach and spleen function and soothe the *liver-qi*, resolve *phlegm*, and counteract *toxicity*.

Indications Depression with fidget; epigastric pain due to stagnation of the *liver-qi* or *stomach-qi*; globus hystericus; scrofula, ulcers.

Usage and dosage 3-5 g.

Storage Preserve in a cool and dry place, protected from mould and moth.

Flos Rhododendri Mollis
(闹羊花, Naoyanghua)

Yellow Azalea Flower

Yellow Azalea Flower is the dried flower of *Rhododendron molle* G. Don (Fam. Ericaceae). The drug is collected at the early stage of flowering in April and May, and dried in the shade or in the sun.

Description Several flowers aggregated at a peduncle, mostly fallen off and a single flower remained, greyish-yellow to yellowish-brown, shrunken. Sepals 5-lobed, hemirounded to triangular, margins with slender hairs. Corolla campanulate, tube relatively long, up to 2.5 cm long, with contortuplicate, 5-lobed apex. Petals broadly ovate, with obtuse or retuse apex. Stamens 5, filaments curved, as long as or slightly longer than corolla, pubescent below the middle part, anthers reddish-brown, poricidal. Pistil 1, stigma cephaloid. Pedicel 1-2.8 cm long, brown, pubescent. Odour, slight; taste, slightly numb.

Identification (1) Powder: Yellowish-brown. Pollen grains tetrahedral, 58-97 μm in diameter, with 3 germinal pores. Non-glandular hairs of calyx multicellular, crossed in several rows, 29-68 μm in diameter. Non-glandular hairs of corolla

unicellular, 10-20 μm in diameter, up to 400 μm long, walls thin, sometimes warts visible. Epidermal cells of microdiodanges subpolygonal or subrounded, 13-31 μm in diameter, arranged regularly and closely, walls slightly thickened, sometimes with distinct pits, cells containing yellowish-brown contents. Epidermal cells of corolla rectangular, subsquare or irregular, 26-78 μm in diameter, with thin and sinuous walls.

(2) To 1 g of the powder add 50 ml of water saturation solution in n-butyl alcohol, ultrasonicate for 30 minutes, filter and evaporate the filtrate to dryness. Dissolve the residue in 2 ml of anhydrous ethanol as the test solution. Prepare a solution of 1 g of Flos Rhododendri Mollis reference drug in the same manner as the reference drug solution. Carry out the method for thin-layer chromatography (Appendix Ⅵ B), using silica gel G containing sodium carboxymethylcellulose as the coating substance and a mixture of toluene, ethyl acetate and methanol (5 : 4 : 0.5) as the mobile phase. Apply separately to the plate 5 μl of each of the above two solutions. After developing and removal of the plate, dry in air, spray with 10% antimony trichlorine chloroform solution and heat at 105℃ until clear spots appear. The spots in the chromatogram obtained with the test solution corresponds in position and colour to the spots obtained with the reference drug solution.

Water Not more than 13.0 per cent (Appendix Ⅸ H, method 1).

Total ash Not more than 10.0 per cent (Appendix Ⅸ K).

Acid-insoluble ash Not more than 4.0 per cent (Appendix Ⅸ K).

Action To relieve rheumatic conditions, and to eliminate blood stasis and alleviate pain.

Indications Rheumatic arthralgia; traumatic injuries; chronic eczema and neutro dermatitis.

Usage and dosage 0.6-1.5 g, to be made into infusion with wine or into pills or powder; for external use, appropriate quantity to be decocted for washing or the fresh flower to be pounded into paste for topical application.

Precaution Overdosage or long-term administration should be avoided. Contraindicated in debility and pregnancy.

Storage Preserve in a dry place, protected from moisture.

Flos Rosae Chinensis (月季花, Yuejihua)

Chinese Rose Flower

Chinese Rose Flower is the dried flower of *Rosa chinensis* Jacq. (Fam. Rosaceae). The drug is collected all year round, starting from the early stage of flowering, and dried in the shade or at a low temperature.

Description Subspherical, 1.5-2.5 cm in diameter. receptacle oblong; calyx 5, dark green, with acuminate apex; petals imbricated, sometimes fallen off, oblong, purplish-red or pale purplish-red; stamens numerous, yellow. Texture light and fragile. Odour, delicately aromatic; taste, weak and slightly bitter.

Action To promote blood circulation and regulate menstruation.

Indications Menstrual disorders, dysmenorrhea.

Usage and dosage 1.5-4.5 g.

Storage Preserve in a cool and dry place, protected from press and moth.

Flos Rosae Rugosae (玫瑰花, Meiguihua)

Rose Flower

Rose Flower is the dried flower bud of *Rosa rugosa* Thunb. (Fam. Rosaceae). The drug is collected in batches before flowering in late spring and early summer, and dried in time at a low temperature.

Description Nearly hemispherical or irregularly massed, 0.7-1.5 cm in diameter. Remaining pedicle pubescent, receptacle hemispherical, accreted with calyx at the base. Calyx 5, lanceolate, yellowish-green or brownish-green, pubescent. Petals frequently crumpled, broadly ovate when unfolded, imbricated, purplish-red, sometimes yellowish-brown. Stamens numerous, yellowish-brown. Style numerous, stigma cephaloid at the receptacle. Texture light and fragile. Odour, strongly aromatic; taste, slightly bitter and astringent.

Identification Surface view of calyx: Non-glandular hairs densely covered, unicellular, frequently curved, 136-680 μm long, with thickened and lignified walls. Glandular hairs, with a multicellular head, oblate, 64-180 μm in diameter, and a multiseriated stalk, 50-340 μm long, sometimes showing unicellular branches at the base. Clusters of calcium oxalate 9-25 μm in diameter.

Water Not more than 12.0 per cent (Appendix Ⅸ H, method 1).

Total ash Not more than 7.0 per cent (Appendix Ⅸ K).

Extractives Carry out the hot extraction method for determination of ethanol-soluble extractives (Appendix Ⅹ A), using 20% ethanol as the solvent, not less than 28.0 per cent.

Action To relieve stagnation of *qi*, regulate blood circulation, and kill pain.

Indications Epigastric pain, loss at appitite, nausea and vomiting caused by the stagnated *liver-qi* and *stomach-qi*; menstrual disorders; traumatic pains.

Usage and dosage 1.5-6 g.

Storage Preserve in well closed containers, stored in a cool and dry place.

Flos Sophorae (槐花, Huaihua)

Pagodatree Flower

Pagodatree Flower is the dried flower and flower bud of *Sophora japonica* L. (Fam. Legu-minosae). The drug is collected in summer at flowering or when flower buds are forming, dried in time and removed from branch, pedicel and foreign matter. The former is known as "Huaihua", and the later "Huaimi".

Description *Huaihua* Crumpled and rolled, petals mostly fallen off. When whole, calyx campanulate, yellowish-green, 5-lobed at the apex. Petals 5, yellow or yellowish-white, 1 larger, subrounded, the apex retuse, the other 4 oblong. Stamens 10, 9 accreted at the base. Filaments

slender. Pistil cylindrical, curved. Texture light. Odour, slight; taste, slightly bitter.

Huaimi Ovoid and ellipsoidal, 2-6 mm long, about 2 mm in diameter. Calyx with several longitudinal striations at the lower part. Petals yellowish-white, unflowering, occurring above the calyx. Pedicels slender. Texture light, broken after rubbing. Odour, slight; taste, slightly bitter and astringent.

Identification (1) Powder: Yellowish-green. Pollen grains subspherical or obtusely triangular, 14-19 μm in diameter, with 3 pores. Non-glandular hairs consisting of 1-3 cells, 86-660 μm long. Stomata, anomocytic, with 4-8 subsidiary cells. Prisms of calcium oxalate infrequently visible.
(2) To 0.1 g of the powder add 10 ml of ethanol, heat for 5 minutes and filter. To 1 ml of the filtrate, add a small quantity of magnesium powder and 2-3 drops of hydrochloric acid; a cherry red colour is produced.
(3) Shake 0.2 g of the powder with 5 ml of methanol for 10 minutes, and filter, use the filtrate as the test solution. Dissolve rutin CRS in methanol to produce a solution containing 4 mg per ml as the reference solution. Carry out the method for thin layer chromatograhy (Appendix Ⅵ B), using silica G as the coating substance and a mixture of ethyl acetate, formic acid and water (8 : 1 : 1) as the mobile phase. Apply separately to the plate 10 μl of each of the two solutions. After developing and removal of the plate, dry in air and spray with 1% aluminium chloride TS. Allow to evaporate ethanol and examine under ultra-violet light at 365 nm. The fluorescent spot due to rutin in the chromatogram obtained with the test solution corresponds in position and colour to the fluorescent spot obtained with the reference solution.

Water Not more than 11.0 per cent (Appendix Ⅸ H, method 1).

Total ash Not more than 14.0 per cent for *Huaihua*, and not more than 9.0 per cent for *Huaimi* (Appendix Ⅸ K).

Acid-insoluble ash Not more than 8.0 per cent for *Huaihua*, and not more than 3.0 per cent for *Huaimi* (Appendix Ⅸ K).

Extractives Carry out the hot extraction method for the determination of ethanol-soluble extractives (Appendix Ⅹ A), using 30% methanol as the solvent, not less than 37.0 per cent for *Huaihua*, and not less than 43.0 per cent for *Huaimi*.

Assay ***Total flavonoids***

Reference solution Weigh accurately 50 mg of rutin CRS dried previously in vacuum to constant weight at 120℃, to a 25 ml volumetric flask and dissolve in a quantity of methanol by warming gently on a water bath. Allow to cool, add methanol to volume, mix well. Measure accurately 10 ml of the solution into a 100 ml volumetric flask, dilute with water to volume, mix well (containing 0.2 mg of anhydrous rutin per ml).

Calibration standard Measure accurately 1, 2, 3, 4, 5 and 6 ml of the reference solution respectively into a 25 ml volumetric flask, add water to 6.0 ml and add 1 ml of 5% sodium nitrite solution, mix well. Allow to stand for 6 minutes, add 1 ml of 10% aluminium nitrate solution, mix well, allow to stand for 6 minutes, add 10 ml of sodium hydroxide TS, dilute with water to volume, mix well, and allow to stand for 15 minutes. Carry out the method for ultraviolet spectrophotometry and colourimetry (Appendix Ⅴ A), using the corresponding solvent as a blank, measure the absorbance at 500 nm and plot the standard curve, using absorbance as ordinate and concentration as abscissa.

Procedure Weigh accurately 1 g of the coarse powder, to a Soxhlet's extractor, add a quantity of ether and heat under reflux until the extract is colourless. Allow to cool, and discard ether solvent, Add 90 ml of methanol, heat under reflux until the extract is colourless. Transfer the extract to a 100 ml volumetric flask, wash the flask with a small quantity of methanol, combine the washing into the volumetric flask, add methanol to volume and mix well. Measure accurately 10 ml to a 100 ml volumetric flask, add water to volume and mix well. Measure accurately 3 ml to a 25 ml volumetric flask. Proceed as described under calibration standard, beginning at the words "add water to 6.0 ml...", Measure the absorbance, read out the weight (μg) of anhydrous rutin in the test solution from the standard curve and calculate the content of $C_{27}H_{30}O_{16}$.
It contains not less than 8.0 per cent of anhydrous rutin ($C_{27}H_{30}O_{16}$) for *Huaihua* and not less than 20.0 per cent of anhydrous rutin ($C_{27}H_{30}O_{16}$) for *Huaimi*, calculated with reference to the dried drug.

Rutin Carry out the method for high performance liquid chromatography (Appendix Ⅵ D).

Chromatographic system and system suitability Use octadecylsilane bonded silica gel as the stationary phase and a mixture of methanol and 1% glacial acetic acid solution (32 : 68) as the mobile phase. As detector a spectrophotometer set at 257 nm. The number of theoretical plates of the column is not less than 2000, calculated with reference to the peak of rutin.

Reference solution Weigh accurately a quantity of rutin CRS dried previously in vacuum to constant weight at 120℃, add methanol to produce a solution of 0.1 mg per ml.

Test solution Weigh accurately a quantity of the coarse powder (0.2 g of *Huaihua* and 0.1 g of *Huaimi*) in a conical flask with stopper, add 50 ml of methanol, accurately measured, weigh and ultrasonicate (power, 250 W; frequency, 25 kHz) for 30 minutes; cool, weigh again, replenish the loss of the solvent with methanol, and mix well. Filter, measure accurately 2 ml of the successive filtrate in a 10 ml volumetric flask, add methanol to volume and mix well.

Procedure Inject 10 μl of each of the two solutions, accurately measured, into the column, and calculate the content.
It contains not less than 6.0 per cent of anhydrous rutin ($C_{27}H_{30}O_{16}$) for *Huaihua* and not less than 15.0 per cent of anhydrous rutin ($C_{27}H_{30}O_{16}$) for *Huaimi*, calculated with reference to the dried drug.

Processing *Flos Sophorae* Eliminate foreign matter.

Flos Sophorae (*stir-baked*) Stir-bake the clean Flos Sophorae as described under the method for simple stir-baking (Appendix Ⅱ D) until a dark yellow colour is produced externally.

Flos Sophorae (*carbonized*) Stir-bake the clean Flos Sophorae as described under the method for carbonizing by stir-baking (Appendix Ⅱ D) until a charred brown colour is produced externally.

Action To arrest bleeding by reducing *heat* in blood, and quench excessive *fire* in the liver.

Indications Hematochezia, hemorrhoidal bleeding, dysentery with bloody stools, abnormal uterine bleeding, spitting of blood, epistaxis; bloodshot eyes, headache and dizziness due to excessive *fire* in the liver.

Usage and dosage 5-9 g.

Storage Preserve in a dry place, protected from moisture and moth.

Fluoritum
(紫石英，Zishiying)

Fluorite

Fluorite is a mineral of fluorides of fluorite group, containing mainly calcium fluoride (CaF_2). The drug is collected, and removed from foreign matter.

Description Aggregates of granules or masses. In irregular pieces with angularities, purple or green, uneven in colour, streak white. Translucent to transparent, with glassy lustre. Externally often with crevices. Texture hard and fragile, easily broken. Odour, slight; taste, weak.

Identification (1) To 0.1 g of the fine powder add 2 ml of hydrochloric acid and 5 ml of 4% boric acid solution, heat to boil gently to dissolve. To 1 drop of the solution on a slide add 1 drop of sulfuric acid solution (1→4), allow to stand for a moment, and examine under a microscope. The needle crystals are observed.
(2) Examine the drug under ultraviolet light at 365 nm, a bright purple or purple to bluish-purple fluorescence is shown.
(3) Mix well 20 mg of the fine powder with 15 mg of the powder of silicon dioxide, transfer to a dry test tube with a rubber stopper wrapped with tin foil, add 10 drops of sulfuric acid. Insert a fine glass tube with a drop of water at the lower opening through the rubber stopper to 3.5 cm from the bottom of the test tube. Heat on an asbestos board carefully, while the water-drop moves upward and downward, stop heating for about 1 minute, then heat again, until a dense white fume is produced. Stand for 2-3 minutes, take out the stopper and the glass tube, wash the lower end of the tube with 2-3 drops of water to a crucible, add 1 drop of the solution of ammonium molybdate [dissolve 3 g of ammonium molybdate in 60 ml of water, add 20 ml of nitric acid solution (1→2), mix well], heat briefly, a pale yellow colour is produced. Allow to stand for 1-2 minutes, add 1 drop of 1% solution of benzidine (dissolve 1 g of benzidine in 100 ml of 10% solution of acetic acid) and 1-2 drops of a saturated solution of sodium acetate, a blue colour or a blue precipitate is produced immediately.

Assay Dissolve about 0.1 g of the fine powder, accurately weighed, in 2 ml of hydrochloric acid and 5 ml of 4% boric acid solution in a conical flask by heating. Add 300 ml of water, 10 ml of 10% triethanolamine solution and 1 drop of methyl red IS, then add dropwise 10% potassium hydroxide solution until the solution turns to yellow. Add an excess of 15 ml, and about 30 mg of calcein indicator mixture, titrate with disodium edetate (0.05 mol/L) VS until the yellowish-green fluorescence disappears and turns to orange. Each ml of disodium edetate (0.05 mol/L) VS is equivalent to 3.904 mg of calcium fluoride (CaF_2).
It contains not less than 85.0 per cent of calcium fluoride (CaF_2).

Processing *Fluoritum* Eliminate foreign matter, break to pieces.

Fluoritum (calcined with vinegar) Calcine the clean pieces of fluoritum as described under the method for calcining openly (Appendix Ⅱ D) to red thoroughly, quench with vinegar, using 30 kg of vinegar per 100 kg of Fluoritum.

Action To induce sedation, and warm the lung and the uterus.

Indications Insomnia, dreamfulness sleep and palpitation; cough and dyspnea due to *deficiency* of the lung; infertility.

Usage and dosage 9-15 g, crushed into pieces and decocted first.

Storage Preserve in a dry place.

Folium Aconiti Kusnezoffii
(草乌叶，Caowuye)

Kusnezoff Monkshood Leaf

Kusnezoff Monkshood Leaf, a habitually used drug of the Mongol nationality, is the dried leaf of *Aconitum kusnezoffii* Reichb. (Fam. Ranunculaceae). The drug is collected in summer when foliage growing luxuriantly before flowering, removed from foreign matter, and dried immediately.

Description Mostly crumpled, rolled and broken, when whole, ovate, 3-divided, 5-12 cm long, 10-17 cm wide, greyish-green or yellowish-green. The middle lobe rhombic, acuminate, subpinnatipartite, the lateral lobes 2-partite; lobules lanceolate or ovate-lanceolate. Upper surface slightly pubescent, lower surface glabrous. Petioles 2-6 cm long. Texture fragile. Odour, slight; taste, slightly salty and pungent.

Identification (1) Surface view of leaf: Anticlinal walls of upper epidermal cells slightly sinuous, the outer periclinal walls sometimes with sparsely striated cuticle. Non-glandular hairs unicellular, mostly sickle-shaped, curved, up to 468 μm long, 44 μm in diameter, with warty walls. Anticlinal walls of lower epidermal cells strongly sinuous; stomata numerous, anomocytic, with 3-5 subsidiary cells.
(2) To 5 g of the powder add 25 ml of chloroform, shake thoroughly. Add 2 ml of sodium carbonate TS, shake for 30 minutes, filter. Add 4 ml of dilute hydrochloric acid TS to the filtrate, shake, separate the acid solution and filter. Transfer the filtrate into two test tubes, add 2 drops of potassium iodobismuthate TS to one test tube, a brownish-yellow precipitate is produced; add 2 drops of silitungsten acid TS to another test tube, a greyish-white precipitate is produced.

Action To remove toxic *heat*, and relieve pain.

Indications Fever in febrile diseases; diarrhea and abdominal pain, headache, toothache.

Usage and dosage 1-1.2 g; generally used in making pills and powder.

Precaution Be cautious about pregnant women.

Storage Preserve in a dry place.

Folium Apocyni Veneti
(罗布麻叶，Luobumaye)

Dogbane Leaf

Dogbane Leaf is the dried leaf of *Apocynum venetum* L. (Fam. Apocynaceae). The drug is collected in summer, removed from foreign matter, and dried.

Description Mostly crumpled and rolled, some broken, when whole, elliptical-lanceolate or ovate-lanceolate, 2-5 cm long, 0.5-2 cm wide, pale green or greyish-green, apex obtuse and mucronate, base obtuse or cuneate, margin

serrulate, usually recurved, glabrous on both surfaces, veins on lower surface prominent; petioles thin, about 4 mm long. Texture fragile. Odour, slight; taste, weak.

Identification (1) Surface view of leaf: Upper and lower epidermal cells polygonal, anticlinal walls straight, with granular cuticular striations on surface; stomata paracytic. Transverse section: Epidermal cells flattened, with convex outer walls. Mesophyll consisting of upper and lower palisade tissues, usually with 2 layers of palisade cells under upper epidermis, and 1 layer under lower epidermis, the cells very short; spongy tissue of 2-4 layers of cells, containing brown contents. Vascular bundle of midrib bicollateral, laticiferous tubes scattered in its surroundings and in phloem.
(2) To 1 g of the powder add 50 ml of ether, heat under reflux for 1 hour, cool, filter, discard the ether solution, add 25 ml of water to the residue, heat under reflux for 1 hour, cool, filter, extract the filtrate with two 20-ml quantities of ethyl acetate, combine the ethyl acetate extracts, evaporate to dryness, dissolve the residue in 1 ml of methanol as the test solution. Prepare a solution with 1 g of Folium Apocyni Veneti reference drug in the same manner as the reference drug solution. Carry out the method for thin layer chromatography (Appendix Ⅵ B), using silica gel G as the coating substance and the lower layer of a mixture of chloroform, methanol and water (13 : 7 : 2) allowed to stand previously overnight below 10℃ as the mobile phase. Apply separately to the plate 3 μl of each of the above two solutions. After developing and removal of the plate, dry in air, spray with 3% aluminum chloride in ethanol, heat at 105℃ to the spots clear, and examine under ultraviolet light at 365 nm. The fluorescent spots in the chromatogram obtained with the test solution correspond in position and colour to the spots in the chromatogram obtained with the reference drug solution.
(3) To 0.5 g of the powder add 50 ml of 80% methanol, heat under reflux for 1 hour, cool, filter, evaporate to dryness, dissolve the residue in 20 ml of water, extract with two 20-ml quantities of ether, discard the ether solutions, add 5 ml of hydrochloric acid to the water solution, heat under reflux for 1 hour, remove, cool immediately, extract with two 20-ml quantities of ether, combine the ether extracts, wash with 10 ml of water, discard the water solution, filter the ether solution through a filter paper paved with a quantity of anhydrous sodium sulfate, expel the filtrate to dryness, dissolve the residue in 1 ml of ethanol as the test solution. Dissolve quercetin CRS and kaempferol CRS in ethanol to prepare two solutions containing 0.5 mg of each per ml as the reference solutions. Carry out the method for thin layer chromatography (Appendix Ⅵ B), using silica gel G as the coating substance and the lower layer of a mixture of hexane, ethyl acetate and formic acid (7 : 5 : 0.8) as the mobile phase. Apply separately to the plate 5 μl of the test solution and 2 μl of each of the reference solutions. After developing and removal of the plate, dry in air, spray with 3% aluminum chloride in ethanol, heat at 105℃ to the spots clear. The spots in the chromatogram obtained with the test solution correspond in position and colour to the spots in the chromatogram obtained with the reference solutions; examine under ultraviolet light at 365 nm, the fluorescent spots in the chromatogram obtained with the test solution correspond in position and colour to the spots in the chromatogram obtained with the reference solutions.

Water Not more than 11.0 per cent (Appendix Ⅸ H, method 1).

Extractives Carry out the method for determination of ethanol-soluble extractives (Appendix Ⅹ A, the hot extraction method), using 75% ethanol as the solvent, not less than 20.0 per cent.

Assay Carry out the method for high performance liquid chromatography (Appendix Ⅵ D).

Chromatographic system and system suitability Use octadecylsilane bonded silica gel as the stationary phase and a mixture of methanol and 0.4% phosphoric acid (50 : 50) as the mobile phase; maintain the column temperature at 30℃. As detector a spectrophotometer set at 360 nm. The number of theoretical plates of the column is not less than 4000, calculated with reference to the peak of quercetin.

Reference solution Dissolve a quantity of quercetin CRS, weighed accurately, in 80% methanol to prepare a solution containing 30 μg per ml.

Test solution Weigh accurately 0.5 g of the powder (through No. 3 sieve) to a stopper conical flask, add accurately 50 ml of 80% methanol, weigh, heat on a water bath for 1 hour, cool, weigh again, compensate the loss of the weight with 80% methanol, mix well and filter. Measure accurately 10 ml of the successive filtrate, add 1 ml of hydrochloric acid, heat under reflux on a water bath at 90℃ for 60 minutes, cool immediately, transfer to a 25 ml volumetric flask, dilute with 80% methanol to volume, mix well.

Procedure Inject accurately 10 μl of each of the reference solution and the test solution, respectively, into the column, and calculate the content.
It contains not less than 0.60 per cent of quercetin ($C_{15}H_{11}O_7$), calculated with reference to the dried drug.

Action To pacify hyperactivity of the liver and soothe the mind, remove *heat* and diuresis.

Indications Dizziness, palpitation and insomnia, and edema due to hyperactivity of the liver; hypertension; neurasthenia; nephritic edema.

Usage and dosage 6-12 g.

Storage Preserve in a cool and dry place.

Folium Artemisiae Argyi (艾叶, Aiye)

Argy Wormwood Leaf

Argy Wormwood Leaf is the dried leaf of *Artemisia argyi* Lévl. et Vant. (Fam. Compositae). The drug is collected in summer before flowering, removed from foreign matter, and dried in the sun.

Description Mostly crumpled and broken, short petioled. When whole, ovate-elliptical, pinnatipartite, segments elliptical-lanceolate, margin irregularly dentate; upper surface greyish-green or dark yellowish-green, sparsely pubescent and glandular-punctate, lower surface densely greyish-white tomentose. Texture soft. Odour, delicately aromatic; taste, bitter.

Identification Powder: Greenish-brown. Non-glandular hairs occurring in two types: one type T-shaped, with a elongated and bent apical cell, unequally 2-armed and a 2-4 celled stalk; the other type of uniseriate, 3-5 celled, with a very long and twisted apical cell, frequently broken. Glandular hairs paramecium-like in surface view, consisting of 4 or 6 oppositely-overlapped cells, devoid of stalk. Clusters of calcium oxalate 3-7 μm in diameter, occurring in mesophyll cells.

Processing *Folium Artemisiae Argyi* Eliminate foreign matter and petioles, and sift.

Folium Artemisiae Argyi (carbonized and processed with

vinegar) Stir-bake clean Folium Artemisiae Argyi as described under the method of carbonizing by stir-baking (Appendix Ⅱ D) until the surface is charred, then spray with vinegar and stir-bake to dryness.
To each 100 kg of Folium Artemisiae Argyi add 15 kg of vinegar.

Action To dispel *cold*, relieve pain, warm the meridians and arrest bleeding.

Folium Artemisiae Argyi (*carbonized and processed with vinegar*) To arrest excessive menstrual discharge.

Indications Cold pain in the lower abdomen; menstrual disorders caused by cold; infertility; spitting of blood, epistaxis, uterine bleeding in pregnancy, excessive menstrual flow or prolonged menstruation; external use for itching.

Folium Artemisiae (*carbonized and processed with vinegar*) hemorrhage in *deficiency-cold* condition.

Usage and dosage 3-9 g; appropriate quantity is used in moxibustion or fumigation and wash.

Storage Preserve in a cool and dry place.

Folium Crataegi (山楂叶, Shanzhaye)

Hawthorn Leaf

Hawthorn Leaf is the dried leaf of *Crataegus pinnatifida* Bge. var. major N. E. Br. or *Crataegus pinnatifida* Bge. (Fam. Rosaceae). The drug is collected in summer and autumn, and dried in the air.

Description Mostly broken, when whole, broadly ovate, 6-12 cm long, 5-8 cm wide. Green to brownish-yellow, apex acuminate, base broadly cuneate, 2-6 pinnate-lobed margin acutely biserrate; petiole 2-6 cm long, stipule ovate to ovate-lanceolate. Odour, slight; taste, astringent, slightly bitter.

Identification (1) Powder: Green to brownish-yellow. Clusters of calcium oxalate 10-30 μm in diameter, prisms of calcium oxalate, 15-30 μm in diameter, scattered or accompanied by leaf trace bundle or vascular bundle. Spiral vessels 20-40 μm in diameter. Non-glandular hairs unicellular, long conical, base 30-40 μm in diameter. Fibres in bundle, 15 μm in diameter, with thickened walls.
(2) To 2 g of the powder add 50 ml of dilute ethanol TS, heat under reflux for 1.5 hours, cool, filter, evaporate the filtrate until no ethanol remained, add 10 ml of water, wash with two 20-ml quantities of petroleum ether (30-60℃), discard the petroleum ether solutions, extract the water solution with two 20-ml quantities of ethyl acetate, combine the ethyl acetate extracts, evaporate to dryness, dissolve the residue in 2 ml of ethanol as the test solution. Dissolve rutin CRS and hyperoside CRS in ethanol to prepare two solutions containing 0.1 mg of each per ml as the reference solutions. Carry out the method for thin layer chromatography (Appendix Ⅵ B), using polyamide as the coating substance and a mixture of ethanol, acetone and water (7 : 5 : 6) as the mobile phase. Apply separately to the film 1-2 μl of each of the above three solutions. After developing and removal of the film, dry in air, spray with aluminum chloride in ethanol TS, heat under a current of hot air to dryness, and examine under ultraviolet light at 365 nm. The fluorescent spots in the chromatogram obtained with the test solution correspond in position and colour to the spots in the chromatogram obtained with the reference solutions.

Water Not more than 12.0 per cent (Appendix Ⅸ H, method 1).

Acid-insoluble ash Not more than 3.0 per cent (Appendix Ⅸ K).

Extractives Carry out the method for determination of ethanol-soluble extractives (Appendix Ⅹ A, the cold maceration method), using dilute ethanol TS as the solvent, not less than 20.0 per cent.

Assay ***Total flavonoids***

Reference solution Weigh accurately 25 mg of rutin CRS, dried previously to constant weight at 120℃, in a 50 ml volumetric flask, add a quantity of ethanol, ultrasonicate to dissolve, cool, add ethanol to volume and mix well. Measure accurately 20 ml of the solution to a 50 ml volumetric flask, add water to volume and mix well (containing 0.2 mg of anhydrous rutin per ml).

Calibration standard Measure accurately 1, 2, 3, 4, 5 and 6 ml of the reference solution, respectively, into a 25 ml volumetric flask, add water to 6 ml, add 1 ml of 5% sodium nitrate, mix well, allow to stand for 6 minutes, add 1 ml of 10% aluminum nitrate, mix well, allow to stand for 6 minutes, add 10 ml of sodium hydroxide solution, add water to volume, mix well, allow to stand for 15 minutes. Carry out the method for ultraviolet spectrophotometry and colourimetry (Appendix Ⅴ A), using the corresponding solvent as a blank, immediately measure the absorbance at 500 nm and plot the standard curve, using absorbance as ordinate and concentration as abscissa.

Procedure Weigh accurately 1 g of the fine powder into a Soxhlet's extractor, add chloroform, and heat under reflux until the extract colourless. Discard the chloroform extract and expel solvent remained in the residue, add methanol, heat under reflux for about 4 hours until the extract colourless, and evaporate the methanol extract to dryness. Dissolve the residue in dilute ethanol TS, transfer to a 50 ml volumetric flask, add dilute ethanol TS to volume, mix well as the stock solution. Filter the stock solution, measure accurately 5 ml of the successive filtrate to a 25 ml volumetric flask, dilute with water to volume and mix well.
Measure accurately 2 ml of the solution to a 25 ml volumetric flask, carry out the procedure as described under the calibration standard beginning at the words "add water to 6 ml..." to "measure the absorbance at 500 nm", read out the weight of rutin in the test solution from the standard curve, and calculate the content.
It contains not less than 7.0 per cent of total flavonoids, calculated as anhydrous rutin ($C_{27}H_{30}O_{16}$) with reference to the dried drug.

Hyperoside Carry out the method for high performance liquid chromatography (Appendix Ⅵ D).

Chromatographic system and system suitability Use octadecylsilane bonded silica gel as the stationary phase and a mixture of acetonitrile, methanol, tetrahydrofuran and 0.5% glacial acetic acid (1 : 1 : 19.4 : 78.6) as the mobile phase. As detector a spectrophotometer set at 363 nm. The number of theoretical plates of the column is not less than 3000, calculated with reference to the peak of hyperoside.

Reference solution Dissolve a quantity of hyperoside CRS, weighed accurately, in dilute ethanol TS to prepare a solution containing 20 μg per ml.

Test solution Measure the stock solution obtained under the Assay of total flavonoids, filter through microporous filter membrane (0.45 μm), and use the successive filtrate.

Procedure Inject accurately 10 μl of each of the reference

solution and the test solution, respectively, into the column, and calculate the content.
It contains not less than 0.050 per cent of hyperoside ($C_{21}H_{20}O_{12}$), calculated with reference to the dried drug.

Action To activate blood circulation to remove blood stagnation, and regulate *qi* flow to activate meridians.

Indications Constriction in the chest, palpitation, amnesia, vertigo and tinnitus due to stagnation of *qi* and blood.

Usage and dosage 3-10 g; or taken after soaked in boiling water.

Storage Preserve in a dry place.

Folium Eriobotryae (枇杷叶, Pipaye)

Loquat Leaf

Loquat Leaf is the dried leaf of *Eriobotrya japonica* (Thunb.) Lindl. (Fam. Rosaceae). The drug is collected all year round, tired up in small bundles after partial drying, and dried in the sun.

Description Oblong or obovate, 12-30 cm long, 4-9 cm wide. Apex acute, base cuneate, margin sparsely serrate and entire near base. Upper surface greyish-green, yellowish-brown or reddish-brown, relatively smooth; lower surface densely yellow tomentose, midrib on lower surface distinctly prominent, lateral veins pinnate; petioles very short, brownish-yellow tomentose. Texture leathery and fragile, easily broken. Odour, slight; taste, slightly bitter.

Identification Transverse section: Upper epidermal cells rectangular, covered with thick cuticle; lower epidermis bearing numerous unicellular non-glandular hairs, usually curved into a V-form near midrib, stomata visible. Palisade tissue 3-4 layers of cells, spongy tissue loose, all containing prisms and clusters of calcium oxalate. Vascular bundle of midrib collateral, nearly ringed; pericycle fibre bundles, arranged in an interrupted ring, with lignified walls, surrounded by parenchymatous cells containing prisms, forming crystal fibres; mucilage cells and prisms of calcium oxalate scattered in parenchyma.

Extractives Carry out the method for detemination of water-soluble extractives (Appendix Ⅹ A, the hot extraction method), not less than 10.0 per cent.

Processing *Folium Eriobotryae* Eliminate the hairs, spray with water to soften, cut into slivers and dry.

Folium Eriobotryae (*processed with honey*) Stir-bake the slivers of Folium Eriobotryae as described under the method for stir-baking with honey (Appendix Ⅱ D) until it is no more sticky to fingers, using 20 kg of refined honey per 100 kg of the slivers of Folium Eriobotryae.

Action To remove *heat* from the lung and stomach, and to relieve cough and vomiting.

Indications Cough and dyspnea caused by *heat* in the lung; vomiting, fever and thirst caused by *heat* in the stomach.

Usage and dosage 6-9 g.

Storage Preserve in a dry place.

Preparation Loquat Leaf Extracts.

Folium et Cacumen Murrayae (九里香, Jiulixiang)

Murraya Jasminorage

Murraya Jasminorage is the dried leaf and young foliferous branch of *Murraya exotica* L. or *Murraya paniculata* (L.) Jack (Fam. Rutaceae). The drug is collected all year round, removed from old branch, and dried in shade.

Description *Leaf and cacumen of Murraya exotica* Young branches cylindrical, 1-5 mm in diameter, externally greyish-brown, longitudinally wrinkled. Texture compact and flexible, uneasily broken, fracture uneven. Leaves pinnately compound, leaflets 3-9, mostly fallen off, obovate or subrhombic, the widest part above the middle, 3 cm long, 1.5 cm wide; apex obtuse, acute or retuse, base slightly oblique, margin entire; yellowish-green, texture thin leathery, the upper surface bearing transparent glandular dots, leaflets short petioled or nearly sessile, the lower part sometimes pubescent. Odour, aromatic; taste bitter, pungent and numb.

Leaf and cacumen of Murraya paniculata Leaflets ovate or elliptical, the widest part at or under the middle, 2-8 cm long, 1-3 cm wide, acuminate or short acute.

Identification (1) Transverse section: Upper and lower epidermis of 1 layer of cells respectively, rectangular, bearing unicellular non-glandular hairs, 30-70 (100) μm long, 9-15 μm in diameter, mesophyll tissue bifacial, palisade tissue of 2-3 layers of cells, not through the midrib; vascular bundle of midrib bicollateral, lignified fibres occurring above and under the vascular bundle; mesophyll tissue containing numerous clusters of calcium oxalate, 9-25 μm in diameter, sometimes prisms visible; oil cavities numerous, rounded, 80-120 μm in diameter, containing yellow oil droplets.
(2) To 2 g of the coarse powder add 20 ml of ethanol, heat under reflex for 30 minutes, and filter. Evaporate 5 ml of the filtrate to dryness, and dissolve the residue in 2 ml of ethyl acetate. Transfer to a test tube, add 2-3 drops of each of a freshly prepared a 7% solution of hydroxylamine hydrochloride in methanol and a 10% solution of potassium hydroxide in methanol, mix well, heat gently, cool, adjust the pH value to 3-4 with dilute hydrochloric acid TS. Add a 1% solution of ferric chloride in ethanol, a purplish-red colour is produced.

Action To promote the flow of *qi*, relieve pain, and resolve blood stasis.

Indications Stomach-ache, rheumatic arthralgia; external application for toothache, traumatic swelling and pain, snake or insect.

Usage and dosage 6-12 g; appropriate quantity of the fresh drug to be pounded into paste for topical application.

Storage Preserve in a dry place.

Folium Eucommiae (杜仲叶, Duzhongye)

Eucommia Leaf

Eucommia Leaf is the dried leaf of *Eucommia ulmoides* Oliv. (Fam. Eucommiaceae). The drug

is collected in summer and autumn when foliage branch growing luxuriantly, dried in the sun or at a lower temperature.

Description Mostly broken, when whole, elliptical or ovate, 7-15 cm long, 3.5-7 cm wide. Surface yellowish-green or yellowish-brown, somewhat lustrous, apex acuminate, base rounded or broadly cuneate, margin dentate, short-petioled. Texture fragile, easily broken on rubbing, fracture linked up by a few of silvery and elastic rubber threads. Odour, slight; taste, slightly bitter.

Identification Use the test solution obtained under the Assay as the test solution. To 1 g of Folium Eucommiae reference drug add 25 ml of methanol, heat under reflux for 1 hour, cool, filter, and use the filtrate as the reference drug solution. Dissolve chlorogenic acid CRS in methanol to prepare a solution containing 1 mg per ml as the reference solution. Carry out the method for thin layer chromatography (Appendix Ⅵ B), using silica gel H mixed with sodium carboxymethylcellulose as the coating substance and the upper layer of a mixture of ethyl acetate, formic acid and water (7 : 2.5 : 2.5) as the mobile phase. Apply separately to the plate 5-10 μl of each of the above three solutions. After developing and removal of the plate, dry in air, and examine under ultraviolet light at 365 nm. The fluorescent spots in the chromatogram obtained with the test solution correspond in position and colour to the spots in the chromatogram obtained with the reference drug solution and reference solution.

Water Not more than 15.0 per cent (Appendix Ⅸ H, method 1).

Extractives Carry out the method for determination of ethanol-soluble extractives (Appendix Ⅹ A, the hot extraction method), using dilute ethanol TS as the solvent, not less than 16.0 per cent.

Assay Carry out the method for high performance liquid chromatography (Appendix Ⅵ D).

Chromatographic system and system suitability Use octadecylsilane bonded silica gel as the stationary phase and a mixture of acetonitrile and 0.4% phosphoric acid (13 : 87) as the mobile phase. As detector a spectrophotometer set at 327 nm. The number of theoretical plates of the column is not less than 2000, calculated with reference to the peak of chlorogenic acid.

Reference solution Weigh accurately a quantity of chlorogenic acid CRS to an amber volumetric flask, dissolve in 50% methanol to prepare a solution containing 50 μg per ml.

Test solution Weigh accurately 1 g of the powder (through No. 3 sieve) in a stopper conical flask, add accurately 25 ml of 50% methanol, weigh, heat on a water bath for 30 minutes, cool, weigh again, compensate the loss of the weight with 50% methanol, mix well, filter through microporous filter membrane (0.45 μm), and use the successive filtrate.

Procedure Inject accurately 10 μl of each of the reference solution and the test solution, respectively, into the column, and calculate the content.
It contains not less than 0.080 per cent of chlorogenic acid ($C_{16}H_{18}O_9$), calculated with reference to the dried drug.

Action To reinforce the liver and kidney, and tone up bones and muscles.

Indications Dizziness, aching pain of the lower back and knees, flaccidity of limbs.

Usage and dosage 10-15 g.

Storage Preserve in a dry place.

Folium Ginkgo
(银杏叶, Yinxingye)

Ginkgo Leaf

Ginkgo Leaf is the dried leaf of *Ginkgo biloba* L. (Fam. Ginkgoaceae). The drug is collected in autumn when leaf green, and dried immediately.

Description Mostly crumpled or broken. When whole, fan-shaped, 3-12 cm long, 5-15 cm wide, yellowish-green or pale brownish-yellow. Upper margin irregularly sinuous, some retuse at the middle, deep to the 4/5 length of leaf. Veins dichotomous-parallel, fine and dense, glabrous, easily torn longitudinally. Base truncate, petioles 2-8 cm long. Texture light. Odour, slight; taste, slightly bitter.

Identification (1) To 1 g of the powder add 10 ml of methanol, heat under reflux for 10 minutes, cool, filter, and use the filtrate as the test solution. Prepare a solution with 1 g of Folium Ginkgo reference drug in the same manner as the reference drug solution. Carry out the method for thin layer chromatography (Appendix Ⅵ B), using silica gel G mixed with 4% sodium acetate as the coating substance and a mixture of ethyl acetate, butanone, formic acid and water (5 : 3 : 1 : 1) as the mobile phase. Apply separately to the plate 6 μl of each of the above two solutions. After developing and removal of the plate, dry in air, spray with 3% aluminum chloride in ethanol, dry in hot air, and examine under ultraviolet light at 365 nm. The main fluorescent spots in the chromatogram obtained with the test solution correspond in position and colour to the spots in the chromatogram obtained with the reference drug solution.
(2) To 1 g of the powder add 40 ml of 50% acetone solution, heat under reflux for 3 hours, filter, evaporate the filtrate to dryness, dissolve the residue in 20 ml of water, extract with two 20-ml quantities of ethyl acetate, combine the ethyl acetate solutions, evaporate to dryness, dissolve the residue in 5 ml of 15% ethanol and apply to a polyamide column (30-60 mesh, 1 g, 1 cm in interdiameter, packed using water as the solvent by wet method), elute with 40 ml of 5% ethanol, collect the eluate, expel the ethanol on a water bath, extract the solution remained with two 20-ml quantities of ethyl acetate, combine the extracts, evaporate to dryness, dissolve the residue in 1 ml of acetone as the test solution. Dissolve ginkgolide A CRS, ginkgolide B CRS, ginkgolide C CRS and bilobalide CRS in acetone to prepare a mixture containing 0.5 mg of each of ginkgolides A, B, C and 1 mg of bilobalide per ml as the reference solution. Carry out the method for thin layer chromatography (Appendix Ⅵ B), using silica gel G mixed with sodium carboxymethylcellulose containing 4% sodium acetate solution as the coating substance and a mixture of toluene, ethyl acetate, acetone and methanol (10 : 5 : 5 : 0.6) as the mobile phase. Apply separately to the plate 5 μl of each of the above two solutions. After developing below 15℃ and removal of the plate, dry in air, fumigate with acetic anhydride vapour for 15 minutes, heat at 140-160℃ for 30 minutes, and examine under ultraviolet light at 365 nm. The fluorescent spots in the chromatogram obtained with the test solution correspond in position and colour to the spots in the chromatogram obtained with the reference solution.

Foreign matter Not more than 2 per cent (Appendix Ⅸ A).

Water Not more than 12.0 per cent (Appendix Ⅸ H, method 1).

Total ash Not more than 10.0 per cent (Appendix Ⅸ K).

Acid-insoluble ash Not more than 2.0 per cent (Appendix Ⅸ K).

Extractives Carry out the method for determination of ethanol-soluble extractives (Appendix Ⅹ A, the hot extraction method)), using dilute ethanol TS as the solvent, not less than 25.0 per cent.

Assay ***Total flavonol glycosides*** Carry out the method for high performance liquid chromatography (Appendix Ⅵ D).

Chromatographic system and system suitability Use octadecylsilane bonded silica gel as the stationary phase and a mixture of methanol and 0.4% phosphoric acid (50 : 50) as the mobile phase. As detector a spectrophotometer set at 360 nm. The number of theoretical plates of the column is not less than 2500, calculated with reference to the peak of quercetin.

Reference solution Weigh accurately a quantity of quercetin CRS, kaempferol CRS, isorhamnetin CRS, previously dried overnight over phosphorous pentoxide, dissolve in methanol to prepare a mixture containing 30 μg of each of quercetin and kaempferol and 20 μg of isorhamnetin per ml as the reference solution.

Test solution Weigh accurately 1 g of the medium powder into a Soxhlet's extractor, add chloroform and heat under reflux for 2 hours. Discard the chloroform solution, evaporate the residue to dryness, add methanol, heat under reflux for 4 hours, and evaporate the extract to dryness. Dissolve the residue in 25 ml of a mixture of methanol and 25% hydrochloric acid (4 : 1), heat under reflux for 30 minutes, cool, transfer to a 50 ml volumetric flask, add methanol to volume, and mix well.

Procedure Inject accurately 10 μl of each of the reference solution and the test solution, respectively, into the column, and calculate the contents of quercetin, kaempferol and isorhamnetin, respectively. Calculate the content of total amount of flavonol glycosides using the following equation.
The content of total amount of flavonol glycosides = (the content of quercetin + the content of kaempferol + the content of isorhamnetin) × 2.51.
It contains not less than 0.40 per cent of total amount of flavonol glycosides, calculated with reference to the dried drug.

Terpenoid lactones Carry out the method for high performance liquid chromatography (Appendix Ⅵ D).

Chromatographic system and system suitability Use octadecylsilane bonded silica gel as the stationary phase and a mixture of methanol, tetrahydrofuran and water (25 : 10 : 65) as the mobile phase. Use an evaporative light scattering detector. The number of theoretical plates of the column is not less than 3000, calculated with reference to the peak of bilobalide.

Reference solution Weigh accurately a quantity of ginkgolide A CRS, ginkgolide B CRS, ginkgolide C CRS and bilobalide CRS, previously dried overnight over phosphorous pentoxide, add 50% methanol to prepare a mixture containing 0.18 mg of ginkgolide A, 0.08 mg of ginkgolide B, 0.10 mg of ginkgolide C and 0.20 mg of bilobalide per ml as the reference solution.

Test solution Weigh accurately 1.5 g of the medium powder into a Soxhlet's extractor, add petroleum ether (30-60℃) and heat under reflux on a water bath at 70℃ for 1 hour. Discard the petroleum ether (30-60℃) solution, evaporate the residue and the filter paper to dryness at 60℃ in an oven, add methanol, heat under reflux for 6 hours, evaporate the extract to dryness, dissolve the residue in methanol, transfer accurately to a 10 ml volumetric flask, ultrasonicate for 30 minutes, cool, add methanol to volume, mix well, and allow to stand. Measure accurately 5 ml of the supernatant and apply to an acidic aluminium oxide column (200-300 mesh, 3 g, 1 cm in interdiameter, packed using methanol as the solvent by wet method), elute with 25 ml of methanol, collect the eluate, evaporate to dryness, dissolve the residue in 5 ml of methanol, transfer to a 10 ml volumetric flask, add 4.5 ml of water, ultrasonicate (power 300 W, frequency 50 kHz) for 30 minutes, cool, add methanol to volume, mix well and filter.

Procedure Inject accurately 10 μl and 20 μl of the reference solution and 10-20 μl of the test solution, respectively, into the column, and calculate the content of ginkgolide A, ginkgolide B, ginkgolide C and bilobalide, respectively, using a calibration equation of logarithm alteration of two external standards.
It contains not less than 0.25 per cent of total amount of ginkgolide A ($C_{20}H_{24}O_9$), ginkgolide B ($C_{20}H_{24}O_{10}$), ginkgolide C ($C_{20}H_{24}O_{11}$) and bilobalide ($C_{15}H_{18}O_8$), calculated with reference to the dried drug.

Processing Eliminate foreign matter and sift off soil.

Action To astringe the *lung-qi* and relieve dyspnea, to aetivate blood circulation and eliminate the *blood stasis*, and to relieve pain.

Indications *Deficiency of lung* marked by cough and aetivate; coronary heart disease, angina pectoris, and hyperlipemia.

Usage and dosage 9-12 g.

Precaution Contraindicated in patients with exterior pathogenic factors.

Storage Preserve in a ventilated and dry place.

Folium Ginseng
(人参叶, Renshenye)

Ginseng Leaf

Ginseng Leaf is the dried leaf of *Panax ginseng* C. A. Mey. (Fam. Araliaceae). The drug is collected in autumn, and dried in the air or baked.

Description Usually in small bundles, sheaf-shaped or fan-shaped, 12-35 cm long. Leaves palmately compound, long petioled, dark green, 3-6 verticillate. Leaflets usually 5, occasionally 7 or 9, ovate or obovate, the basal ones 2-8 cm long, 1-4 cm wide; the upper ones similar in size, 4-16 cm long, 2-7 cm wide, cuneate at the base, acuminate at the apex, margin serrulate and bristly, veins on the upper surface bristly, and veins on the lower surface prominent. Texture papery, easily broken. Odour, delicately aromatic; taste, slightly bitter and sweet.

Identification (1) Powder: Yellowish-green. Upper epidermal cells irregular, nearly rectangular, 35-92 μm long, 32-60 μm wide, with sinuous or deep sinuous anticlinal walls. Lower epidermal cells similar to upper epidermal cells, relatively small, stomata anomocytic, subsidiary cells 31-35 μm long. Palisade tissue absent, mesophyll consisting of 4 layers of subrounded parenchymatous cells, 18-29 μm in diameter, containing chloroplasts or clusters of calciun oxalate, 12-40 μm in diameter, acutangular.
(2) Moisten 0.2 g of the powder in a 10 ml stopper test tube with 1 ml of water, add 5 ml of *n*-butanol saturated with water, mix well by shaking, stand at room temperature for 48 hours. To 1 portion of the supernatant add 3 portions of water saturated with *n*-butanol, mix well by shaking, allow to stand until two layers separated (centrifuge if necessary),

use the supernatant as the test solution. Disslove ginsenoside Rg_1 CRS and ginsenoside Re CRS in methanol to produce a mixture containing 2.5 mg of each per ml as the reference solution. Carry out the method for thin layer chromatography (Appendix Ⅵ B), using silica gel G as the coating substance and the upper layer of *n*-butanol, ethyl acetate and water (4 : 1 : 5) as the mobile phase. Apply separately to the plate 10 μl of each of the above two solutions. After developing and removal of the plate, dry in air. Spray with sulfuric acid solution (1→10), heat at 105℃ to the spots clear. The spots in the chromatogram obtained with the test solution correspond in colour and position to the spots in the chromatogram obtained with the reference solution.

Assay Carry out the method for high performance liquid chromatography (Appendix Ⅵ D).

Chromatographic system and system suitability Use octadecylsilane bonded silica gel as the stationary phase and a mixture of acetonitrile and 0.05% phosphoric acid (100 : 400) as the mobile phase. As detector a spectrophotometer set at 203 nm. The number of theoretical plates of the column is not less than 1500, calculated with reference to the peak of ginsenoside Re.

Reference solution Weigh accurately a quantity of ginsenoside Rg_1 CRS and ginsenoside Re CRS respectively, add methanol to produce two solutions containing 0.25 mg of ginsenoside Rg_1 and 0.5 mg of ginsenoside Re per ml respectively.

Test solution Weigh accurately 0.2 g of the powder to a Soxhlet's extractor, add 30 ml of chloroform, heat under reflux for 1 hours. Discard the chloroform solution, expel chloroform of the residue, add 30 ml of methanol, heat under reflux for 3 hours, evaporate the extract to dryness. Dissolve the residue in 10 ml of water, extrace with two 10-ml quantities of petroleum ether (30-60℃), discard the petroleum ether extracts, apply the water solution to a column packed with D101 macroporous resin (1.5 cm in inner diameter, 15 cm in length), elute with 50 ml of water, discard the water eluate, elute again with 50 ml of 20% ethanol, discard the 20% ethanol eluate, elute successively with 80 ml of 80% ethanol, collect 70 ml of the eluate and evaporate to dryness. Dissolve the residue in methanol and transfer accurately to a 10 ml volumetric flask, add methanol to volume, mix well.

Procedure Inject accurately 10 μl of each of the reference solutions and the test solution into the column, respectively, and calculate the content.

It contains not less than 2.25 per cent of the total amount of ginsenoside Rg_1 ($C_{42}H_{72}O_{14}$) and ginsenoside Re ($C_{48}H_{82}O_{18}$).

Action To nourish general *qi* and lung, expel summer-heat, and promote production of body fluids.

Indications Cough caused by *qi deficiency*, dysphoria due to summer-heat, thirst due to fluids deficiency, dizziness, weakness of the limbs.

Usage and dosage 3-9 g.

Precaution Incompatible with Rhizoma et Radix Veratri.

Storage Preserve in a cool and dry place, protected from moisture.

Folium Ilicis Cornutae
(枸骨叶, Gouguye)

Chinese Holly Leaf

Chinese Holly Leaf is the dried leaf of *Ilex cornuta* Lindl. ex Paxt. (Fam. Aquifoliaceae). The drug is collected in autumn, removed from foreign matter, and dried in the sun.

Description Subrectangular, oblong-rectangular, occasionally long-ovate, 3-8 cm long, 1.5-4 cm wide. Apex with 3 relatively big hard spines, the apical one usually recurved; base truncate or broadly cuneate, sometimes each of both sides with 1-3 spines, edges somewhat recurved; long-ovate leaves usually free from spines. Upper surface yellowish-green or greenish-brown, lustrous; lower surface greyish-yellow or greyish-green. Veins pinnate; short-petioled. Texture leathery, hard and thick. Odour, slight; taste, slightly bitter.

Identification Transverse section at the base of leaf: Upper epidermal cells subsquare, thick-walled, covered with a thick cuticle, bearing unicellular non-glandular hairs near midrib. Lower epidermal cells relatively small, stomata visible. Palisade tissue of 2-4 layers of cells; spongy tissue loose. 1 to several layers of collenchymatous cells occurring inside the upper and lower epidermis at midrib. Vascular bundle of midrib collateral, with lignified fibre groups above and below the vascular bundle, Collenchymatous cells, stone cells in semi-ring and lignified fibre groups sequently occurring inside the epidermis of margin; several layers of collenchymatous cells at the margin near the petiole; absent above the base. Stone cells occasionally occurring in the collenchyma inside the epidermis of margin and the lower epidermis of midrib, and outside the fibre groups below the phloem. Parenchyma and lower epidermal cells frequently containing clusters of calcium oxalate.

Action To remove *heat*, to pacify the hyperactivity of the liver, and replenish the *kidney-yin*.

Indications Hemoptysis and afternoon fever in phthisis; dizziness, and bluned vision hypertension.

Usage and dosage 9-15 g.

Storage Preserve in a dry place.

Folium Isatidis
(大青叶, Daqingye)

Dyers Woad Leaf

Dyers Woad Leaf is the dried leaf of *Isatis indigotica* Fort. (Fam. Cruciferae). The drug is collected 2-3 times in summer and autumn, removed from foreign matter, and dried in the sun.

Description Mostly crumpled and rolled, sometimes broken. When whole, long-elliptical to oblong-oblanceolate, 5-20 cm long, 2-6 cm wide, upper surface dark greyish-green, sometimes small deeper coloured prominences present; apex obtuse, margin entire or slightly undulate, base attenuate and decurrent into the petiole appearing wing-shaped; petioles 4-10 cm long, pale brownish-yellow. Texture fragile. Odour, slight; taste, slightly sour, bitter and astringent.

Identification (1) Powder: Greenish-brown. Anticlinal walls of lower epidermal cells slightly sinuous and somewhat beaded; stomata anomocytic, with 3-4 subsidiary cells. Palisade tissue and spongy tissue indistinctly differentiated.

(2) To 0.5 g of the powder add 20 ml of chloroform, heat under reflux for 1 hour, filter and evaporate the filtrate to 1 ml as the test solution. Dissolve indigotin CRS and indirubin CRS in chloroform to produce a mixture containing 1 mg of

each per ml as the reference solution. Carry out the method for thin layer chromatography (Appendix Ⅵ B), using silica gel G as the coating substance and a mixture of benzene, chloroform and acetone (5 : 4 : 1) as the mobile phase. Apply separately to the plate 5 μl of each of the above two solutions. After developing and removal of the plate, dry in air. The blue spot and pale purplish-red spot in the chromatogram obtained with the test solution correspond in position and colour to the spots in the chromatogram obtained with the reference solution.

Water Not more than 13.0 per cent (Appendix Ⅸ H, method 1).

Extractives Carry out the method for determination of ethanol-soluble extractives (Appendix Ⅹ A, the hot extraction method), using ethanol as the solvent, not less than 16.0 per cent.

Assay Carry out the method for high performance liquid chromatography (Appendix Ⅵ D).

Chromatographic system and system suitability Use octadecylsilane bonded silica gel as the stationary phase and a mixture of methanol and water (75 : 25) as the mobile phase. As detector a spectrophotometer set at 289 nm. The number of theoretical plates of the column is not less than 4000, calculated with reference to the peak of indirubin.

Reference solution Dissolve a quantity of indirubin CRS, weighed accurately, in methanol to prepare a solution containing 2 μg per ml.

Test solution Weigh accurately 0.25 g of the fine powder to a Soxhlet's extractor, add appropriate quantity of chloroform to macerate for 15 hours, heat under reflux to the extract colourless. Recover the solvent to dryness, dissolve the residue in methanol and transfer to a 100 ml volumetric flask, add methanol to volume and mix well.

Procedure Inject accurately 20 μl of each of the reference solution and the test solution, respectively, into the column, and calculate the content.
It contains not less than 0.020 per cent of indirubin ($C_{16}H_{10}N_2O_2$), calculated with reference to the dried drug.

Processing Eliminate foreign matter, wash rapidly, cut into pieces, and dry.

Action To remove toxic *heat*, cool blood, to reduce eruptions.

Indications High fever with impairment of consciousness and skin eruptions in epidemic diseases; jaundice; acute dysentery; mumps; inflammation of the throat, erysipelas, carbuncles.

Usage and dosage 9-15 g.

Storage Preserve in a ventilated and dry place, protected from mould.

Folium Mori
(桑叶, Sangye)

Mulberry Leaf

Mulberry Leaf is the dried leaf of *Morus alba* L. (Fam. Moraceae). The drug is collected at the early frost season, removed from foreign matter, and dried in the sun.

Description Mostly crumpled and broken. When whole, petioled, ovate or broadly ovate, 8-15 cm long, 7-13 cm wide; apex acuminate, base truncate, round or cordate, margin dentate or obtuse-dentate, some irregularly partite. Upper surface yellowish-green or pale yellowish-brown, some with small warty protrudings; lower surface relatively light in colour, veins prominent, lateral veins reticulate, sparsely pubescent on the veins, cluster of hairs occurring at the vein base. Texture fragile. Odour, slight; taste, weak, slightly bitter and astringent.

Identification (1) Powder: Yellowish-green or yellowish-brown. The upper epidermis occurring large crystal cells, containing cystolith, 47-77 μm in diameter. Stomata in lower epidermis anomocytic, with 4-6 subsidiary cells. Non-glandular hairs unicellular, 50-230 μm long. Clusters of calcium oxalate 5-16 μm in diameter; prisms occasionally visible.
(2) To 2 g of the powder add 30 ml of petroleum ether (60-90℃), heat under reflux for 30 minutes, discard the petroleum ether solution, evaporate the residue to dryness, add 30 ml of ethanol, ultrasonicate for 20 minutes, filter and evaporate the filtrate to dryness. Dissolve the residue in 10 ml of hot water, heat on a water bath at 60℃, stir to dissolve, filter and evaporate the filtrate to dryness. Dissolve the residue in 1 ml of methanol as the test solution. Prepare a solution with 2 g of Folium Mori reference drug in the same manner as the reference drug solution. Carry out the method for thin layer chromatography (Appendix Ⅵ B), using silica gel G mixed with sodium carboxymethylcellulose as the coating substance and the upper layer of toluene, ethyl acetate and formic acid (5 : 2 : 1) as the mobile phase. Apply separately to the plate 5 μl of each of the above two solutions. After developing (about 8 cm) in a chamber pre-equilibriated with the mobile phase for 10 minutes and removal of the plate, dry in air, and examine under ultraviolet light at 365 nm. The fluorescent spots in the chromatogram obtained with the test solution correspond in position and colour to the spots in the chromatogram obtained with the reference drug solution.

Water Not more than 15.0 per cent (Appendix Ⅸ H, method 1).

Acid-insoluble ash Not more than 4.5 per cent (Appendix Ⅸ K).

Extractives Carry out the method for determination of ethanol-soluble extractives (Appendix Ⅹ A, the hot extraction method), using dehydrated ethanol as the solvent, not less than 5.0 per cent.

Assay Carry out the method for high performance liquid chromatography (Appendix Ⅵ D).

Chromatographic system and system suitability Use octadecylsilane bonded silica gel as the stationary phase, methanol as the mobile phase A, 0.5% phosphoric acid as the mobile phase B, elute in gradient as the following:

Time(min)	Mobile phase A (per cent V/V)	Mobile phase B (per cent V/V)
0-5	30	70
5-10	30→35	70→65
10-15	35→40	65→60
15-18	40→50	60→50

As detector a spectrophotometer set at 358 nm. The number of theoretical plates of the column is not less than 5000, calculated with reference to the peak of rutin.

Reference solution Weigh accurately a quantity of rutin CRS, dried previously to constant weight at 120℃ in vacuum, dissolve in methanol to prepare a solution containing 0.1 mg per ml.

Test solution Weigh accurately 1 g of the powder (through No. 3 sieve) to a round-bottom flask, add 50 ml of methanol, heat under reflux for 30 minutes, filter, extract the residue with two 50-ml quantities of methanol and combine the filtrates. Recover the solvent in vacuum, dissolve the residue in methanol, transfer to a 25 ml volumetric flask, dilute to volume, and mix well.

Procedure Inject accurately 10 μl of each of the reference solution and the test solution, respectively, into the column, and calculate the content.
It contains not less than 0.10 per cent of rutin ($C_{27}H_{30}O_{16}$), calculated with reference to the dried drug.

Processing Eliminate foreign matter, rub to break, remove the petioles, sift off the dust.

Action To dispel *wind-heat* and remove *heat* from the lung, to subdue hyperactivity of the liver and improve eyesight.

Indications Common cold due to *wind-heat*, dry cough due to *heat* in the lung dizziness, headache, inflammation of the eye, blurred vision.

Usage and dosage 5-9 g.

Storage Preserve in a dry place.

Folium Nelumbinis (荷叶, Heye)

Lotus Leaf

Lotus Leaf is the dried leaf of *Nelumbo nucifera* Gaertn. (Fam. Nymphaeaceae). The drug is collected in summer and autumn, dried in the sun to remove most of water, removed from the petioles, folded to semicircular or plicate, and dried again.

Description Semicircular or plicate, subrounded when spread, 20-50 cm in diameter, margin entire or slightly sinuous. Upper surface dark green or yellowish-green, relatively rough, lower surface pale greyish-brown, relatively smooth, with 21-22 thick veins, radiating from the centre to the border, with convex remains of petiole in the centre. Texture fragile, easily broken. Odour, slightly aromatic; taste, slightly bitter.

Identification Powder: Greyish-green. Upper epidermal cells polygonal, with papillary or short tomentose protuberances; stomata, anomocytic, subsidiary cells 5-8. Anticlinal walls of lower epidermal cells slightly sinuous, sometimes beaded. Clusters of calcium oxalate numerous, up to 40 μm in diameter.

Water Not more than 15.0 per cent (Appendix Ⅸ H, method 1).

Total ash Not more than 12.0 per cent (Appendix Ⅸ K).

Acid-insoluble ash Not more than 1.5 per cent (Appendix Ⅸ K).

Extractives Carry out the method for determination of ethanol-soluble extractives (Appendix Ⅹ A, the hot extraction method), using 70% ethanol as the solvent not less than 10.0 per cent.

Assay Carry out the method for high performance liquid chromatography (Appendix Ⅵ D).

Chromatographic system and system suitability Use octadecylsilane bonded silica gel as the stationary phase and a mixture of acetonitrile, water, triethylamine and glacial acetic acid (27 : 70.6 : 1.6 : 0.78) as the mobile phase. As detector a spectrophotometer set at 270 nm. The number of theoretical plates of the column is not less than 2000, calculated with reference to the peak of nuciferine.

Reference solution Dissolve a quantity of nuciferine CRS, weighed accurately, in methanol to prepare a solution containing 16 μg per ml.

Test solution Weigh accurately 0.5 g of the coarse powder to a stopper cornical flask, add accurately 50 ml of methanol, weigh, heat on a water bath for 2.5 hours, cool, weigh again, compensate the loss of the weight with methanol, mix well, and filter. Measure accurately 5 ml of the successive filtrate to a 10 ml volumetric flask, dilute with water to volume, and mix well.

Procedure Inject accurately 20 μl of each of the reference solution and the test solution, respectively, into the column, and calculate the content.
It contains not less than 0.10 per cent of nuciferine ($C_{19}H_{21}NO_2$), calculated with reference to the dried drug.

Processing *Folium Nelumbinis* Spray with water, soften briefly, cut into slivers and dry.

Folium Nelumbinis (*carbonized*) Carbonize the clean Folium Nelumbinis as described under the method for carbonizing by calcining (Appendix Ⅱ D).

Action To relieve summer-heat, invigorate the spleen function and arrest bleeding by reducing *heat* in blood.

Folium Nelumbinis (*carbonized*): To arrest bleeding, remove *blood stasis*.

Indications Dire thirst caused by *summer-heat* with dire thirst; diarrhea caused by *summer-damp* or *deficiency* of the spleen; spitting of blood, epistaxis, hematochezia and abnormal uterine bleeding caused by *heat* in blood.

Folium Nelumbinis (*carbonized*): Various kind of bleeding and massive postpartum hemorrhage.

Usage and dosage 3-9 g; 15-30 g for fresh Folium Nelumbinis; 3-6 g of Folium Nelumbinis (carbonized).

Storage Preserve in a ventilated and dry place, protected from moth.

Folium Perillae (紫苏叶, Zisuye)

Perilla Leaf

Perilla Leaf is the dried leaf (or bearing young branch) of *Perilla frutescens* (L.) Britt. (Fam. Labiatae). The drug is collected in summer when foliage branch growing luxuriantly, removed from foreign matter, and dired in the sun.

Description Mostly crumpled, rolled and broken, when whole, ovate, 4-11 cm long, 2.5-9 cm wide. Apex acuminate or acute, base rounded or broadly cuneate, margin crenate. Both surfaces purple or the upper green and the lower purple, scattered with greyish-white hairs, and occurring numerous dotted glandular scales on the lower surface. Petioles 2-7 cm long, purple or purplish-green. Texture fragile. Young branches, 2-5 mm in diameter; purplish-green, with a pith in the centre of fracture. Odour, delicately aromatic; taste, slightly pungent.

Identification (1) Surface view of leaf: Some epidermal cells containing purple pigment. A red colour is produced

immediately on adding 10% hydrochloric acid solution; or a bright green colour is produced on adding 5% potassium hydroxide solution, subsequently changed to yellowish-green.
(2) To 0.7 g of the coarse powder in a round-bottom flask add 250 ml of water, mix well, connect the flask with a volatile oil determination apparatus, add water from the top of the apparatus until it reaches the mark and overflows to the flask, add 1.5 ml of petroleum ether (60-90℃) and connect the flask to a reflux condenser, heat to boil and keep in gentle boiling for 2 hours, cool, and separate the petroleum ether layer as the test solution. Prepare a solution with 0.7 g of Folium Perillae reference drug in the same manner as the reference drug solution. Carry out the method for thin layer chromatography (Appendix Ⅵ B), using silica gel G as the coating substance and a mixture of petroleum ether (60-90℃) and ethyl acetate (19 : 1) as the mobile phase. Apply separately to the plate 10 μl of each of the above two solutions. After developing (about 15 cm) and removal of the plate, dry in air. Spray with dinitrophenylhydrazine TS, and allow to stand. The spots in the chromatogram obtained with the test solution correspond in position and colour to the spots in the chromatogram obtained with the reference drug solution.

Processing Eliminate foreign matter and old branches; or spray with water, cut into pieces and dry.

Action To induce perspiration and dispel *cold*, and regulate the stomach function.

Indications Common cold with cough and nausea; morning sickness; fish or crab poisoning.

Usage and dosage 5-9 g.

Storage Preserve in a cool and dry place.

Folium Polygoni Tinctorii (蓼大青叶, Liaodaqingye)

Indigoplant Leaf

Indigoplant Leaf is the dried leaf of *Polygonum tinctorium* Ait. (Fam. Polygonaceae). The drug is collected twice in summer and autumn when foliage branch growing luxuriantly, removed from stem and foreign matter, and dried.

Description Mostly crumpled and broken, when whole, elliptical, 3-8 cm long, 2-5 cm wide, bluish-green or blackish-blue, apex obtuse, base attenuate, margin entire. Veins pale yellowish-brown, slightly prominent on the lower surface. Petioles flattened, occasionally with membranaceous ochrea. Texture fragile. Odour, slight; taste, slightly astringent and bitter.

Identification (1) Surface view of leaf: Epidermal cells polygonal, anticlinal walls straight or slightly sinuous; stomata paracytic, a few anomocytic. Glandular hairs with a 4-8 celled head, and a bicellular or multicellular stalk, biseriate or multiseriate. Non-glandular hairs multiseriate, with lignified and thickened walls, frequently occuring on the edge and midrib of leaf. Mesophyll tissue containing numerous blue to bluish-black pigment granules. Clusters of calcium oxalate numerous, 12-80 μm in diameter.
(2) Concentrate 10 ml of the chloroform solution obtained under the Assay to 1 ml as the test solution. Dissolve indigo CRS in chloroform to produce a solution containing 1 mg per ml as the reference solution. Carry out the method for thin layer chromatography (Appendix Ⅵ B), using silica gel G as the coating substance and a mixture of benzene, chloroform and acetone (5 : 4 : 1) as the mobile phase. Apply separately to the plate 5 μl of each of the above two solutions. After developing and removal of the plate, dry in air. The blue spot in the chromatogram obtained with the test solution corresponds in position and colour to the spot in the chromatogram obtained with the reference solution.

Assay Carry out the method for high performance liquid chromatography (Appendix Ⅵ D).

Chromatographic system and system suitability Use octadecylsilane bonded silica gel as the stationary phase and a mixture of methanol and water (6 : 4) as the mobile phase. As detector a spectrophotometer set at 604 nm. The number of theoretical plates of the column is not less than 1800, calculated with reference to the peak of indigo.

Reference solution Dissolve 2.5 mg of indigo CRS, accurately weighed, in a 250 ml volumetric flask, add about 200 ml of a 2% solution of chloral hydrate in chloroform (weigh 2.0 g of chloral hydrate, previously dried over silica gel in a desiccator for 24 hours, add chloroform to 100 ml, allow to stand until the solution is turbid, dehydrate with anhydrous sodium sulfate and filter), ultrasonicate (power 250 W, frequency 33 kHz) for 1.5 hours, allow to cool, dilute with a 2% solution of chloral hydrate in chloroform to volume, and mix well (containing 10 μg of indigo per ml).

Test solution Weigh accurately 25 mg of the fine powder in a 25 ml volumetric flask, add about 20 ml of a 2% solution of chloral hydrate in chloroform, ultrasonicate (power, 250 W; frequency, 33 kHz) for 1.5 hours, allow to cool, dilute with a 2% solution of chloral hydrate in chloroform to volume, mix well and filter. Use the successive filtrate as the test solution.

Procedure Inject accurately 4-10 μl of each of the reference solution and the test solution, respectively, into the column, and calculate the content.
It contains not less than 0.50 per cent of indigo ($C_{16}H_{10}N_2O_2$).

Action To remove toxic *heat*, and to reduce eruptions by reducing *heat* in blood.

Indications Fever and eruptions in epidemic diseases; cough and dyspnea due to *heat* in the lung; inflammation of the throat, mumps, erysipelas, carbuncles.

Usage and dosage 9-15 g; for external use, appropriate quantity of the fresh leaves to be pounded into paste and applied topically.

Storage Preserve in a ventilated and dry place.

Folium Pyrrosiae (石韦, Shiwei)

Shearer's Pyrrosia Leaf

Shearer's Pyrrosia Leaf is the dried leaf of *Pyrrosia sheareri* (Bak.) Ching, *Pyrrosia lingua* (Thunb.) Farwell or *Pyrrosia petiolosa* (Christ) Ching (Fam. Polypodiaceae). The drug is collected all year round, removed from rhizome and root, and dried in the sun or in the shade.

Description *Leaf of Pyrrosia sheareri* Fronds slightly crumpled, when whole, lanceolate, 10-25 cm long, 3-5 cm wide, apex acuminate, base auriculate oblique, margin entire, edges usually rolled inwards. Upper surface yellowish-green or greyish-green, sparsely black rounded-pitted; lower surface densely covered with reddish-brown stellate hairs, sometimes the area between the lateral veins

completely covered with brown rounded-spotted sori. Stipes with 4 ribs, 10-20 cm long, 1.5-3 mm in diameter, slightly twisted, grooved longitudinally. Fronds leathery. Odour, slight; taste, slightly astringent and bitter.

Leaf of Pyrrosia lingua Fronds lanceolate or oblong-lanceolate, 8-12 cm long, 1-3 cm wide, base cuneate and symmetrical. Sori closely and regularly arranged between the lateral veins. Stipes 5-10 cm long, about 1.5 mm in diameter.

Leaf of Pyrrosia petiolosa Fronds mostly rolled into a quill, when whole, oblong or ovate-oblong, 3-8 cm long, 1-2.5 cm wide, base cuneate and symmetrical. Lower surface with indistinct lateral veins and completely covered with sori. Stipes 3-12 cm long, about 1 mm in diameter.

Identification Powder: Yellowish-brown. Stellate hairs with a 7-12 celled body, showing a radiate arrangement of upper and lower layers, cells lanceolate, apex acute, some with longitudinal or irregular reticulate striations on the surface; and a 1-9 celled stalk. Spores ellipsoidal in polar view and reniform in equatorial view, with warty walls. Lower epidermal cells of leaf polygonal, with beaded anticlinal walls and subrounded stomata. Fibres long fusiform, filled with reddish-brown or brown masses.

Foreign matter Not more than 3 per cent (Appendix Ⅸ A).

Water Not more than 13.0 per cent (Appendix Ⅸ H, method 1).

Total ash Not more than 7.0 per cent (Appendix Ⅸ K).

Acid-insoluble ash Not more than 0.8 per cent (Appendix Ⅸ K).

Extractives Carry out the method for determination of ethanol-soluble extractives (Appendix Ⅹ A, the hot extraction method), using dilute ethanol TS as the solvent, not less than 18.0 per cent.

Assay Carry out the method for high performance liquid chromatography (Appendix Ⅵ D).

Chromatographic system and system suitability Use octadecylsilane bonded silica gel as the stationary phase and a mixture of acetonitrile and 0.5% phosphoric acid (11 : 89) as the mobile phase. As detector a spectrophotometer set at 326 nm. The number of theoretical plates of the column is not less than 2000, calculated with reference to the peak of chlorogenic acid.

Reference solution Weigh accurately a quantity of chlorogenic acid CRS to an amber volumetric flask, dissolve in 50% methanol to prepare a solution containing 40 μg per ml.

Test solution Weigh accurately 0.2 g of the powder (through No. 2 sieve) to a stopper cornical flask, add accurately 25 ml of 50% methanol, weigh, ultrasonicate (power 300 W, frequency 25 kHz) for 45 minutes, cool, weigh again, compensate the loss of the weight with 50% methanol, mix well, filter, and use the successive filtrate.

Procedure Inject accurately 10 μl of each of the reference solution and the test solution, respectively, into the column, and calculate the content.

It contains not less than 0.30 per cent of chlorogenic acid ($C_{16}H_{18}O_9$), calculated with reference to the dried drug.

Processing Eliminate foreign matter, wash clean, cut into sections, dry in the sun and sift.

Action To induce urination, relieve dysuria, remove *heat* and arrest bleeding.

Indications Urinary infection and urolithiasis with difficult painful urination; spitting of blood, epistaxis, hematuria, abnormal uterine bleeding; cough and asthma due to *heat* in the lung.

Usage and dosage 6-12 g.

Storage Preserve in a ventilated and dry place.

Folium Rhododendri Daurici (满山红, Manshanhong)

Dahurian Rhododendron Leaf

Dahurian Rhododendron Leaf is the dried leaf of *Rhododendron dauricum* L. (Fam. Ericaceae). The drug is collected in summer and autumn, and dried in the shade.

Description Mostly recurved and tubular, sometimes crumpled and broken. When whole, elliptical or long-obovate, 2-7.5 cm long, 1-3 cm wide; apex obtuse, base subrounded or broadly cuneate, margin entire; upper surface dark green to brownish-green, scattered with pale yellow glandular scales; lower surface greyish-green, glandular scales numerous. Petioles 3-10 mm long. Texture nearly leathery. Odour, aromatic and characteristic; taste, relatively bitter and slightly pungent.

Identification (1) Transverse section: Upper epidermal cells rectangular, covered with cuticle, bearing glandular scales at the sunken places; lower epidermal cells subrounded, with sinuous walls, stomata and glandular scales present. Palisade tissue of 2-3 layers of cells, spongy cells subrounded. Vascular bundle of midrib bicollateral pericyclic fibres arranged in an interrupted ring, numerous layers of collenchymatous cells occurring inside the upper and lower epidermis, the upper epidermis of midrib bearing unicellular non-glandular hairs. Parenchymatous cells and spongy cells containing clusters of calcium oxalate.

(2) To 5 g of the coarse powder add 50 ml of ethanol, ultrasonicate for 15 minutes, filter and evaporate the filtrate to dryness. Dissolve the residue with three 10-ml quantities of 40% ethanol by heating on a water bath, filter when hot, combine the filtrates and evaporate to dryness. Extract the water solution with two 15-ml quantities of ether, combine the ether extracts and evaporate to dryness. Dissolve the residue in 1 ml of methanol as the test solution. Prepare a solution with 5 g of Folium Rhododendri Daurici reference drug in the same manner as the reference drug solution. Dissolve farrerol CRS in methanol to produce a solution containing 1 mg per ml as the reference solution. Carry out the method for thin layer chromatography (Appendix Ⅵ B), using silica gel G as the coating substance and the upper layer of toluene, ethyl acetate and formic acid (7 : 2 : 0.5) as the mobile phase. Apply separately to the plate 5 μl of each of the above three solutions. After developing in a chamber pre-equilibrated with the mobile phase for 15 minutes and removal of the plate, dry in air. Spray with aluminium chloride TS, heat to the spots clear, and examine under ultraviolet light at 365 nm. The fluorescent spots in the chromatogram obtained with the test solution correspond in position and colour to the spots in the chromatogram obtained with the reference solution and the reference drug solution.

Water Not more than 9.0 per cent (Appendix Ⅸ H, method 2).

Total ash Not more than 8.0 per cent (Appendix Ⅸ K).

Acid-insoluble ash Not more than 3.0 per cent (Appendix Ⅸ K).

Extractives Carry out the method for determination of ethanol-soluble extractives (Appendix Ⅹ A, the hot extraction method), using 60% ethanol as the solvent, not

less than 20.0 per cent.

Assay Carry out the method for high performance liquid chromatography (Appendix Ⅵ D).

Chromatographic system and system suitability Use octadecylsilane bonded silica gel as the stationary phase and a mixture of methanol and water (60 : 40) as the mobile phase. As detector a spectrophotometer set at 295 nm. The number of theoretical plates of the column is not less than 2000, calculated with reference to the peak of farrerol.

Reference solution Dissolve a quantity of farrerol CRS, weighed accurately, in methanol to prepare a solution containing 60 μg per ml.

Test solution Weigh accurately 1 g of the fine powder to a stopper conical flask, add accurately 50 ml of 60% methanol, weigh, ultrasonicate (power 250 W, frequency 33 kHz) for 15 minutes, cool, weigh again, compensate the loss of the weight with 60% methanol and filter. Measure accurately 25 ml of the successive filtrate, evaporate to dryness, dissolve the residue in 60% methanol, transfer to a 5 ml volumetric flask, dilute with 60% methanol to volume, mix well.

Procedure Inject accurately 10 μl of each of the reference solution and the test solution, respectively, into the column, and calculate the content.
It contains not less than 0.080 per cent of farrerol ($C_{17}H_{16}O_5$), calculated with reference to the dried drug.

Action To arrest cough and expectoration of phlegm.

Indications Acute and chronic bronchitis.

Usage and dosage 25-50 g, then take the medicated preparation; 6-12 g, macerated with 40% ethanol.

Storage Preserve in a cool and dry place, protected from moisture and heat.

Folium Sennae
(番泻叶, Fanxieye)

Senna Leaf

Senna Leaf is the dried leaflet of *Cassia angustifolia* Vahl or *Cassia acutifolia* Delile (Fam. Leguminosae).

Description *Leaf of Cassia angustifolia* Elongated ovate or ovate-lanceolate, 1.5-5 cm long, 0.4-2 cm wide, margin entire, apex acute, base slightly asymmetrical. Upper surface yellowish-green, lower surface pale yellowish-green, glabrous or nearly glabrous, veins slightly prominent. Texture leathery. Odour, slight and characteristic; taste, slightly bitter and mucilaginous.

Leaf of Cassia acutifolia Lanceolate or elongated ovate, slightly rolled, apex mucronate or slightly convex, base asymmetrical, both surfaces covered with fine and short hairs.

Identification (1) Powder: Pale green or yellowish-green. Crystal fibres numerous, prisms of calcium oxalate 12-15 μm in diameter. Non-glandular hairs unicellular, 100-350 μm long, 12-25 μm in diameter, with thickened and warty walls. Clusters of calcium oxalate occurring in parenchymatous cells of mesophyll, 9-20 μm in diameter. Epidermal cells of both surfaces polygonal in surface view, with straight anticlinal walls; stomata occurring on both surfaces, mostly paracytic, subsidiary cells mostly 2, sometimes 3.
(2) To 25 mg of the powder add 50 ml of water and 2 ml of hydrochloric acid, heat on a water bath for 15 minutes, allow to cool. Extract with 40 ml of ether, separate the ether layer and dehydrate with anhydrous sodium sulfate and filter. Evaporate 5 ml of the filtrate to dryness, allow to cool, add 5 ml of ammonia TS, a yellow or orange colour is produced, changing to purplish-red when heated on a water bath for 2 minutes.
(3) To 0.5 g of the powder add 3 ml of a mixture solution of equal quantities of ethanol and water, ultrasonicate for 30 minutes, centrifuge, use the supernatant as the test solution. Prepare a solution with 0.5 g of Folium Sennae reference drug in the same manner as the reference drug solution. Carry out the method for thin layer chromatography (Appendix Ⅵ B), using silica gel G as the coating substance and a mixture of ethyl acetate, *n*-propanol and water (4 : 4 : 3) as the mobile phase. Apply separately in strip to the plate 10 μl of each of the above two solutions. After developing and removal of the plate, dry in air and examine under ultraviolet light at 365 nm. The fluorescent spots in the chromatogram obtained with the test solution correspond in position and colour to the spots in the chromatogram obtained with the reference drug solution. Spray with 20% nitric acid solution, heat at 120℃ for 10 minutes, allow to cool, spray again with a 5% solution of potassium hydroxide in dilute ethanol TS, examine in daylight. The spots in the chromatogram obtained with the test solution correspond in position and colour to the spots in the chromatogram obtained with the reference drug solution.

Foreign matter Not more than 6 per cent (Appendix Ⅸ A).

Water Not more than 10.0 per cent (Appendix H, method 1).

Assay Protect from light throughout the assay, all reagents must be freshly prepared.
Weigh accurately 0.15 g of the fine powder to a round-bottom flask, add 30 ml of water, shake thoroughly, weigh, heat under reflux on a water bath for 15 minutes. Allow to cool, weigh and compensate the loss of the weight with water, shake well. Centrifuge and transfer accurately 20 ml of the supernatant to a 150 ml separator. Add 0.1 ml of hydrochloric acid (2 mol/L), extract with three 15-ml quantities of chloroform, allow to separate and discard the chloroform layer. Add 0.1 g of sodium bicarbonate to the water layer, shake for 3 minutes. Centrifuge and transfer accurately 10 ml of the supernatant to a 100 ml round-bottom flask. Add 20 ml of 10.5% ferric chloride solution, mix well, heat under reflux on a water bath for 20 minutes, the level of water in water bath must be higher than that of liquid in flask. Add immediately 1 ml of hydrochloric acid again and continue heating for 20 minutes with frequent shaking until the precipitate is dissolved completely, the time must be controlled strictly. Allow to cool, transfer the mixture to a separator, extract with three 25-ml quantities of ether. Wash the combined ether extracts with two 15-ml quantities of water and discard the washings. Filter the ether extracts through dry filter paper to a 100 ml amber coloured volumetric flask and wash the filter with ether. Combine the washings with ether extracts, then add ether to volume. Measure accurately 10 ml of the ether solution and evaporate carefully to dryness by gentle heating, dissolve the residue in 10 ml of a 0.5% solution of magnesium acetate in methanol, accurately measured. Carry out the method for ultraviolet spectrophotometry and colourimetry (Appendix Ⅴ A), using methanol as a blank. Immediately measure the absorbance at 515 nm. Calculate the content of sennoside B, taking 240 as the value of A (1%, 1 cm).
It contains not less than 2.5 per cent of total sennosides, calculated as sennoside B ($C_{42}H_{38}O_{20}$).

Action To purge *heat*, relax the bowels and induce urination.

Indications Accumulation of *heat* marked by constipation

and abdominal pain; edema.

Usage and dosage 2-6 g, added when the decoction is nearly done, or taken after soaked in boiling water.

Precaution Be cautious about pregnant women.

Storage Preserve in a ventilated and dry place, protected from light.

Folium Viticis Negundo (牡荆叶, Mujingye)

Hempleaf Negundo Chastetree Leaf

Hempleaf Negundo Chastetree Leaf is the fresh leaf of *Vitex negundo* L. var. *cannabifolia* (Sieb. et Zucc.) Hand.-Mazz. (Fam. Verbenaceae). The drug is collected in summer and autumn when foliage growing luxuriantly, removed from stem and branch.

Description Leaves digitately compound, leaflets 5 or 3, lanceolate or elliptical-lanceolate, the middle leaflet 5-10 cm long, 2-4 cm wide, the lateral leaflets relatively small, apex acuminate, base cuneate, margin dentate. Upper surface green, lower surface pale green, both surfaces pubescent along veins, relatively dense on the lower surface of young leaf. Petioles 2-6 cm long, with a shallow groove, densely covered with greyish-white pubescences. Odour, aromatic; taste, pungent, slightly bitter.

Identification Transverse section: Upper epidermal cells arranged regularly, pubescent on both surfaces and more prominent on the lower surface. Palisade tissue of 3-4 layers of cells; spongy tissue loose. Vascular bundles of midrib collateral, U-shaped, with 1-5 small vascular bundles in the hollow of U-shaped part, pits visible on surrounding parenchymatous cells, several layers of collenchymatous cells occurring inside the upper epidermis and lower epidermis.
Surface view of leaf: Upper epidermal cells subpolygonal or irregular, with sinuous anticlinal walls; Non-glandular hairs 1-4-celled, apical cells elongated, with warty prominences; Glandular scales with a 4-celled head, up to 55 μm in diameter, and an unicellular stalk; Small glandular hairs few, with a 1-4-celled head, up to 25 μm in diameter, and a 1-3-celled stalk, very short. Lower epidermal cells relatively small, 17-30 (45) μm long, 12-25 μm in diameter, with slightly sinuous or straight anticlinal walls; stomata anomocytic, 15-20 μm in diameter, with 3-6 subsidiary cells; Non-glandular hairs, glandular scales and small glandular hairs numerous.

Action To induce expectoration, relieve cough and asthma.

Indications Chronic bronchitis with cough and asthma.

Usage and dosage Fresh Oleum Viticis Negundo for the extraction of volatile oil.

Storage Preserve in a cool place.

Fructus Akebiae (预知子, Yuzhizi)

Akebia Fruit

Akebia Fruit is the dried nearly ripe fruit of *Akebia quinata* (Thunb.) Decne., *Akebia trifoliata* (Thunb.) Koidz. or *Akebia trifoliata* (Thunb.) Koidz. var. *australis* (Diels) Rehd. (Fam. Lardizabalaceae). The drug is collected in summer or autumn when the fruit turned greenish-yellow, dried in the sun or treated in boiling water for a moment, then dried in the sun.

Description Reniform or prolate-ellipsoidal, slightly curved, 3-9 cm long, 1.5-3.5 cm in diameter. Externally yellowish-brown or blackish-brown, with deep irregular wrinkles. Apex obtuse, exhibiting a fruit stalk scar at the base. Texture hard, sarcocarp pale yellow or yellowish-brown; seeds numerous, flattened and prolate-ovoid, yellowish-brown or purplish-brown, lustrous, and linearly striated. Odour, slightly aromatic; taste bitter.

Processing Wash clean, dry in the sun. Break to pieces before use.

Action To regulate the flow of the *liver-qi*, promote blood circulation and relieve pain, and promote diuresis.

Indications Epigastric and hypochondriac distension and pain; amenorrhea, dysmenorrhea; oliguria; snake-and insect bite.

Usage and dosage 3-9 g.

Storage Preserve in a ventilated and dry place.

Fructus Alpiniae Oxyphyllae (益智, Yizhi)

Sharpleaf Glangal Fruit

Sharpleaf Glangal Fruit is the dried ripe fruit of *Alpinia oxyphylla* Miq. (Fam. Zingiberaceae). The drug is collected in summer and autumn when the fruit turns from green to red, dried in the sun or at a low temperature.

Description Ellipsoidal, with both ends slightly acute 1.2-2 cm long, 1-1.3 cm in diameter. Externally brown or greyish-brown, with 13-20 longitudinal, uneven and prominent lines on the surface, remains of perianth on the apex and fruit stalk at the base. Pericarp thin and slightly tenacious, adhering closely to seeds. Seeds gathered in groups and divided to three valves by septum with 6-11 seeds in each valve. Individual seed irregularly oblate, with slightly obtuse ribs, about 3 mm in diameter, externally greyish-brown or greyish-yellow, covered with pale brown membranous aril. Texture, hard, endosperm white. Odour, characteristically aromatic; taste, pungent and slightly bitter.

Identification (1) Transverse section of seed: Parenchymatous cells sometimes remained. Epidermal cells of testa subrounded, subsquare or rectangular, slightly radially elongated, relatively thick-walled. Hypodermis consisting of 1 row of parenchymatous cells, containing yellowish-brown contents. Oil cells 1 row, subsquare or rectangular, containing yellow oil droplets; pigment layer consisting of several rows of yellowish-brown cells, scattered with 1-3 rows of relatively large subrounded oil cells containing yellow oil droplets. Tegmen consisting of 1 row of palisade sclerenchyma cells, yellowish-brown or reddish-brown, the inner and lateral walls extremely thick, lumina small, containing a silica body. Perisperm cells filled with starch granules. Endosperm cell contain aleurone grains and fatty oil droplets.
Powder: Yellowish-brown. Epidermal cells of testa strap-shaped in surface view, up to 29 μm in diameter, walls slightly thickened, often vertical with hypodermis. Cells of pigment layer wrinkled, indistinctly bordered, containing

reddish-brown and dark brown contents, most cells broken to irregular pigment fragments. Oil cells subsquare, rectangular or scattered among the cells of pigment layer. Sclerenchymatous cells of tegmen yellowish-brown or brown, polygonal in surface view, walls thickened and unlignified, containing silica bodies; in section view, showing 1 row of palisade-like cells, the inner and lateral walls extremely thickened, lumina eccentric, containing silica bodies. Perisperm cells filled with starch masses, aggregated of fine starch granules. Endosperm cells containing aleurone grains and fatty oil droplets.

(2) Dissolve a quantity of volatile oil obtained under Assay in dehydrated ethanol to produce a solution containing 10 μl per ml as the test solution. Produce a solution of Fructus Alpiniae Oxyphyllae reference drug in the same manner used as the reference solution. Carry out the method for thin layer chromatography (Appendix Ⅵ B), using silica gel GF_{254} as the coating substance and a mixture of *n*-hexane-ethyl acetate (9 : 1) as the mobile phase. Apply separately 5-10 μl of each of the two solutions to the plate. After developing and removal of the plate, dry in air, and examine under ultraviolet light at 254 nm. The dark spot in the chromatogram obtained with the test solution corresponds in position and colour to the spot in the chromatogram obtained with the reference solution, then spray with dinitrophenylhydrazine dilute TS, and the spots become gradually orange-red for a moment.

Assay Carry out the method for determination of volatile oil (Appendix Ⅹ D).

The seeds contain not less than 1.0% (ml/g) of volatile oil.

Processing *Semen Alpiniae Oxyphyllae* Eliminate foreign matter and pericarp, break to pieces before use.

Semen Alpiniae Oxyphyllae (processed with salt) Stir-bake the Semen Alpiniae Oxyphyllae as described under the method for stir-baking with salt (Appendix Ⅱ D) to dryness, break to pieces before use.

Action To warm the spleen, relieve diarrhea and arrest excessive discharge of saliva, warm the kidney, and arrest seminal emission and polyaria.

Indications Diarrhea, abdominal pain with cold sensation *cold* syndrome of the *kidney* characterized by, and salivation due to spleen *deficiency* in *cold* condition; enuresis, frequent urination, seminal emission and whitish discharge from urethra due to *kidney-yang deficiency*.

Usage and dosage 3-9 g.

Storage Preserve in a cool and dry place.

Fructus Amomi (砂仁, Sharen)

Villous Amomum Fruit

Villous Amomum Fruit is the dried ripe fruit of *Amomum villosum* Lour., *Amomum villosum* Lour. var. *xanthioides* T. L. Wu et Senjen or *Amomum longiligulare* T. L. Wu (Fam. Zingiberaceae). The drug is collected between summer and autumn when ripe, and dried in the sun or at a low temperature.

Description *Fruit of Amomum villosum and Amomum villosum* var. *xanthioides* Ellipsoidal or ovoid, indistinctly 3-ridged, 1.5-2 cm long, 1-1.5 cm in diameter. Externally brown, densely covered with spiny protrudings, apex with remains of perianth, and base often bearing a fruit stalk. Pericarp thin and soft. Seeds agglutinated into a mass, 3-ridged obtusely, divided into 3 groups by white septa, and each group containing 5-26 seeds. Seeds irregularly polyhedral, 2-3 mm in diameter; externally brownish-red or dark brown, finely wrinkled, covered with pale brown membranous aril; texture hard, endosperm greyish-white. Odour, strongly aromatic; taste, pungent, cool and slightly bitter.

Fruit of Amomum longiligulare Long ellipsoidal or ovoid, distinctly 3-ridged distinctly, 1.5-2 cm long, 0.8-1.2 cm in diameter. Externally with flaky and branched soft spines, base showing a scar of fruit stalk. Pericarp thickened and hard. Masses of seeds relatively small, each group containing 3-24 seeds, 1.5-2 mm in diameter. Odour and taste slightly weak.

Identification (1) Transverse section of seed of Fructus Amomum villosum: Sometimes remains of aril present. Epidermal cells of testa 1 row, radially elongated, slightly thick-walled; hypodermal cells 1 row, containing brown or reddish-brown contents. Oil cells in 1 row 76-106 μm long, 16-25 μm wide, containing yellow oil droplets. Pigment layer consisting of several rows of brown cells, polygonal, and irregularly arranged. Endotesta consisting of 1 row of palisade-like thick-walled cells, yellowish-brown, small, with heavily thickened inner and lateral walls, containing a silica body. Cells of perisperm containing starch granules and a few fine prisms of calcium oxalate. Cells of endosperm containing small aleurone grains and fatty oil droplets.

Powder: Greyish-brown. Thick-walled cells of endotesta reddish-brown or yellow-brown, polygonal in surface view, with thickened and non-lignified walls, lumen containing a silica body; showing 1 row of palisade cells in section view with heavily thickened inner and lateral walls, lumen inclined to the outer side and containing a silica body. Epidermal cells of testa pale yellow, stripe-shaped in surface view, usually vertically arranged with hypodermal cells in an upper and lower layered pattern; hypodermal cells containing brown or reddish-brown contents. Cells of pigment layer shrivelled with indistinct boarder, containing reddish-brown or dark brown contents. Cells of perisperm subrectangular or irregular, filled with starch masses formed by aggregation of small starch granules, some containing small prisms of calcium oxalate. Cells of endosperm containing minute aleurone grains and fatty oil droplets. Oil cells colourless, thin-walled and scattered with oil droplets occasionally.

(2) Dissolve the volatile oil obtained under the Assay in ethanol to produce a solution containing 20 μl per ml as the test solution. Dissolve bornyl acetate CRS in ethanol to produce a solution containing 10 μl per ml as the reference solution. Carry out the method for thin layer chromatography (Appendix Ⅵ B), using silica gel G as the coating substance and a mixture of cyclohexane-ethyl acetate (22 : 1) as the mobile phase. Apply separately to the plate 1 μl of each of the two solutions. After developing and removal of the plate, dry in air, spray with a 5% solution of vanillin in surfuric acid, heat until the colour of the spot cleared up. A purplish-red spot in the chromatogram obtained with the test solution corresponds in position and colour to the spot in the chromatogram obtained with the reference solution.

Water Carry out the method for the determination of water (Appendix Ⅸ H, method 2), not more than 15.0 per cent.

Assay Carry out the method for the determination of volatile oil (Appendix Ⅹ D).

Masses of seeds of Amomum Villosum contain not less than 3.0% of volatile oil (ml/g).

Masses of seeds of Amomum Longiligulare contain not less than 1.0% of volatile oil (ml/g).

Processing Eliminate foreign matter. Break to pieces before

use.

Action To eliminate *damp* and improve appetite, warm the spleen and check diarrhea, and prevent abortion.

Indications Accumulation of *damp* in the *spleen* and the stomach marked by epigastric stuffiness and loss at appitite; vomiting and diarrhea due to *deficiency-cold* of the spleen and the stomach; morning sickness; threatened abortion.

Usage and dosage 3-6 g, added when the decoction is nearly done.

Storage Preserve in a cool and dry place.

Fructus Amomi Rotundus (豆蔻, Doukou)

Round Cardamon Fruit

Round Cardamon Fruit is the dried ripe fruit of *Amomum kravanh* Pirre ex Gagnep. or *Amomum compactum* Soland ex Maton (Fam. Zingiberaceae). It can be classified as "Protogenic Round Cardamon Fruit" and "Indonesian Round Cardamon Fruit" according to the different localities of production.

Description *Protogenic Round Cardamon Fruit* Subspherical, 1.2-1.8 cm in diameter. Externally yellowish-white to pale yellowish-brown, with 3 relatively deep longitudinal furrows, apex possessing a prominent stylopodium, base with a dented scar of fruit stalk, both ends bearing pale brown pubescences. Texture of pericarp light and brittle, easily broken longitudinally, 3 loculi, each containing about 10 seeds; seeds irregularly polyhedral, dorsal surface slightly raised, 3-4 mm in diameter, externally dark brown, with wrinkles and remains of aril. Odour, aromatic; taste, pungent and cool, slightly camphor-like.

Indonesian Round Cardamon Fruit Relatively small, externally yellowish-white, sometimes slightly purplish-brown, testa relatively thin, seeds thin and blighted. Odour, relatively weak.

Identification Take the volatile oil obtained under the Assay as the test solution, and a solution of cineol CRS as the reference solution (both can be diluted with an appropriate quantity of ethanol if necessary). Carry out the method for thin layer chromatography (Appendix Ⅵ B), using silica gel G as the coating substance and benzene-ethyl acetate (9.5 : 0.5) as the mobile phase. Apply 10 μl each of the two solutions to the plate. After developing and removal of the plate, dry in air, spray with a 5% solution of vanillin in sulfuric acid, heat at 105℃ for 5-10 minutes and examine immediately. The spot in the chromatogram obtained with the test solution corresponds in position and colour to the spot in the chromatogram obtained with the reference solution.

Foreign matter Not more than 1 per cent for Protogenic Round Cardamon Fruit, and not more than 2 per cent for Indonesian Round Cardamon Fruit (Appendix Ⅸ A).

Water Carry out the method for determination of water (Appendix Ⅸ H, method 2), not more than 11.0 per cent of water for Protogenic Round Cardamon Fruit, and not more than 12.0 per cent of water for Indonesian Round Cardamon Fruit.

Assay ***Volatile oil*** Take 30-50 g of broken seeds, carry out the method for determination of volatile oil (Appendix Ⅹ D). It contains not less than 5.0 per cent (ml/g) of volatile oil for Protogenic Round Cardamon Seeds, and not less than 4.0 per cent (ml/g) of volatile oil for Indonesion Round Cardamon seed.

Cineole Carry out the method for gas chromatography (Appendix Ⅵ E).

Chromatographic system and system suitability Use 10% SE-54 as the stationary phase; maintain the column temperature at 110℃. The number of theoretical plates of the column is not less than 1000, calculated with the reference to the peak of cineole.

Reference solution Dissolve a quantity of cineole CRS, accurately weighed, in n-hexane to produce a solution of 25 mg per ml.

Test solution Weigh accurately 5 g of the powder (through No. 3 sieve) in a round-bottom flask, add 200 ml of water, connect the apparatus for determination of volatile oil, add water to 3 ml volume, add 2-3 ml of n-hexane, connect the condenser, heat to boil slightly for 2 hours, cool, separate n-hexane layer and allow to filter through the funnel containing 1 g of dehydrated sodium sulfate into a 5 ml volumetric flask, wash the flask with a small quantity of n-hexane, combine the washings to the volumetric flask and dilute with n-hexane to volume and mix well.

Procedure Inject accurately 1 μl of the reference solution and the test solution, respectively, into the column, and calculate the content.

It contains not less than 3.0 per cent of cineole ($C_{10}H_{18}O$), calculated with reference to the dried drug.

Processing Eliminate foreign matter. Break to pieces before use.

Action To resolve *damp*, remove retained food, promote the flow of *qi* and warm the spleen and stomach to promote digestion.

Indications Loss of appetite due to accumulation of *damp* in the spleen and stomach; feeling of suffocation in the chest with loss of appitite at the early stage of *damp-warm* syndromes; nausea, vomiting, distending pain in the chest and abdomen, caused by *cold-damp*; indigestion.

Usage and dosage 3-6 g, added when the decoction is nearly done.

Storage Preserve in well closed containers, stored in a cool and dry place, protected from moth.

Fructus Anisi Stellati (八角茴香, Bajiaohuixiang)

Chinese Star Anise

Chinese Star Anise is the dried ripe fruit of *Illcium verum* Hook. f. (Fam. Magnoliaceae). The drug is collected in autumn and winter when the fruit turns from green to yellow, and dried after treated with boiling water for a moment or dried directly.

Description Mostly aggregate fruit of 8 follicles radiated from the central axis. Follicles 1-2 cm long, 0.3-0.5 cm wide, 0.6-1 cm high; outer surface reddish-brown, irregularly wrinkled, summit beaked, upper part mostly dehiscent; inner surface pale brown, smooth and lustrous. Texture hard and brittle. Fruit stalk 3-4 cm long, connected to the base of the fruit, curved, usually deciduous. Each follicle containing a compressed-ovoid seed, about 6 mm long, reddish-brown or yellowish-brown, lustrous, with a hilum at the acute end; endosperm white, oily. Odour, aromatic; taste, pungent and

sweet.

Identification (1) Powder: Reddish-brown. Palisade cells of endocarp column-shaped, 200-546 μm long, walls slightly thick with cross or V-shaped pits. Stone cells of testa yellow, subpolygonal in surface view, walls strongly thickened, undulate, lumina branched, containing brownish-black contents; rectangular in lateral view with unevenly thickened walls. Stone cells of pericarp subrectangular, oblong or branched with thickened walls. Fibres long, scattered singly or in bundles, 29-60 μm in diameter, walls lignified and pitted. Cells of mesocarp reddish-brown, with oil cells scattered. Cells of endosperm polygonal, containing oil droplets and aleurone grains.

(2) to 1 g of the coarse powder add 15 ml of petroleum ether (60-90℃) -ether (1 : 1), stopper tightly, shake for 15 minutes, and filter. Evaporate the filtrate on a water bath to dryness, and dissolve the residue in 2 ml of dehydrated ethanol as the test solution. Apply 2 μl of the test solution to a thin-layer chromatographic plate coated with silica gel G containing sodium carboxymethyl cellulose, dry in air, and then apply about 2 μl of phloroglucinol in hydrochloric acid TS: a pink and violet-red cycle line is exhibited.

(3) Transfer accurately 10 μl of the test solution obtained under Identification test (2) to a 10 ml volumetric flack, dilute with dehydrated ethanol to volume, and mix well. Carry out the method for ultraviolet spectrophotometry and colourimetry (Appendix Ⅴ A). The light absorbance of the solution exhibits a maximum at 259 nm.

(4) Prepare a solution of 1 g of the coarse powder of Fructus Anisi Stellati reference drug in the same manner as described under Identification as test (2) the reference drug solution. Dissolve anisaldehyde CRS in 2 ml of dehydrated ethanol to produce a solution containing 20 μl per ml as the reference solution. Carry out the method for thin layer chromatography (Appendix Ⅵ B), using silica gel G containing carboxymethyl-cellulose sodium as the coating substance and a mixture of petroleum ether (30-60℃)-acetone-ethyl acetate (19 : 1 : 1) as the mobile phase. Apply separately 5-10μl each of the test solution obtained as described under Identification test (2) and the above two solutions to the plate. After developing and removal of the plate, dry in air. Spray with phloroglucinol in hydrochloric acid TS. The spots in the chromatogram obtained with the test solution correspond in position and colour to the spots in the chromatogram obtained with the reference drug solution, and the orange to orange-red spot in the chromatogram obtained with the test solution corresponds in position and colour to the spot in the chromatogram obtained with the reference solution.

Assay Carry out the method for determination of volatile oil (Appendix Ⅹ D).

It contains not less than 4.0 per cent (ml/g) of the volatile oil.

Action To dispel *cold* and warm *yang*, regulate the flow of *qi* to relieve pain.

Indications Abdominal colic; lumbago due to *deficiency* of the kidney; vomiting, cold pain in the epigastrium and abdomen due to cold of the stomach.

Usage and dosage 3-6 g.

Storage Preserve in a cool and dry place.

Fructus Arctii
(牛蒡子, Niubangzi)

Great Burdock Achene

Great Burdock Achene is the dried ripe fruit of *Arctium lappa* L. (Fam. Compositae). The infructescence is collected in autumn when ripe, and dried in the sun, the fruit is tapped out, removed from foreign matter, and dried again in the sun.

Description Long-obovate, slightly flattened, somewhat curved, 5-7 mm long, 2-3 mm wide. Externally greyish-brown, purplish-black mottled, with several longitudinal ribs, usually 1-2 middle ribs relatively distinct. Summit obtuse-rounded, slightly broad, with a circular ring at the top, and a pointed remain of style in the center; base slightly narrowed, bearing surface pale in colour. Pericarp relatively hard, cotyledons 2, yellowish-white, oily. Odour, slight; taste, bitter, slightly pungent and numb.

Identification (1) Powder: Greyish-brown. Stone cells of endocarp slightly flattened, tapering-fusiform, long-elliptical or tapering-ovate, closely mosaic in surface view; 70-224 μm long, 13-70 μm wide, the walls up to 20 μm thick, lignified, with transversely elongated pits. Reticulate cells of mesocarp polygonal in transverse sectional view, anticlinal walls spotted-thickened; cells elongated in longitudinal sectional view, the walls with fine and dense crisscross striations. Prisms of calcium oxalate 3-9 μm in diameter, occurring abundantly in yellow parenchymatous cells of mesocarp, borders of crystal cells indistinct. Cells of cotyledons filled with aleurone grains, some containing small clusters and oil droplets.

(2) To 0.5 g of the powder add 20 ml of ethanol, ultrasonicate for 30 minutes, filter and evaporate the filtrate to dryness. Dissolve the residue in 2 ml of methanol as the test solution. Prepare a solution of 0.5 g reference drug of Fructus Arctii in the same manner as the reference drug solution. Dissolve arctiin CRS in ethanol to produce a solution containing 5 mg per ml as the reference solution. Carry out the method for thin-layer chromatography (Appendix Ⅵ B), using silica gel G as the coating substance and a mixture of chloroform-methanol-water (40 : 8 : 1) as the mobile phase. Apply separately 3 μl each of the three solutions to the plate. After developing and removal of the plate, dry in air. Spray with a 10% solution of sulphuric acid in ethanol and heat to the spot distinct. The spot in the chromatogram obtained with the test solution corresponds in position and colour to the spots in the chromatogram obtained with the reference solution and the reference drug solution.

Total ash Not more than 7.0 per cent (Appendix Ⅸ K).

Acid-insoluble ash Not more than 2.0 per cent (Appendix Ⅸ K).

Assay Carry out the method for high performance liquid chromatography (Appendix Ⅵ D).

Chromatographic system and system suitability Use octadecylsilane bonded silica gel as the stationary phase and methanol-water (1 : 1.1) as the mobile phase. The wavelength of the detector is 280 nm. The number of theoretic plates of the column is not less than 1500, calculated with the reference to the peak of arctiin.

Reference solution Weight accurately arctiin CRS, in methanol to produce a solution containing 0.5 mg per ml and mix well.

Test solution Weight accurately 0.5 g of the powder (through No. 3 sieve) in a 50 ml of volumetric flask, add 45 ml of methanol, ultrasonicate (power, 150 W; frequency, 20 kHz) for 20 min, supply with methanol to the volume, mix well and filter. Use the successive filtrate as the test solution.

Procedure Inject accurately 10 μl each of the reference solution and the test solution, separately, into the column, determine and calculate the content.
It contains not less 5.0 per cent arctiin ($C_{27}H_{34}O_{11}$).

Processing *Fructus Arctii* Eliminate foreign matter, wash and dry. Break to pieces before use.

Fructus Arctii (*stir-baked*) Stir-bake the clean Fructus Arctii as described under the method for simple stir-baking (Appendix Ⅱ D) until it becomes inflated and slightly scented. Break to pieces before use.

Action To dispel *wind-heat*, ventilate the lung and promote eruption, clear *heat-toxicity*, and to soothe sore throat.

Indications Cough and expectoration in influenza or upper respiratory infection due to *wind-heat*; measles; rubella; sore throat; mumps; erysipelas, carbuncles and sores.

Usage and dosage 6-12 g.

Storage Preserve in a ventilated and dry place.

Fructus Aristolochiae (马兜铃, Madouling)

Dutohmanspipe Fruit

Dutohmanspipe Fruit is the dried ripe fruit of *Aristolochia contorta* Bge. or *Aristolochia debilis* Sieb. et Zucc. (Fam. Aristolochiaceae). The drug is collected in autumn when the fruit turns from green to yellow, and dried.

Description Ovoid, 3-7 cm long, 2-4 cm in diameter. Outer surface yellowish-green, greyish-green or brown, with 12 longitudinal ribs, from which extending numerous horizontal parallel veinlets. Apex flattened and obtuse, base with a slender fruitstalk. Pericarp light and fragile, easily divided into 6 valves, fruit stalk also divided into 6 splittings. Inner surface of pericarp smooth and lustrous, with dense transverse veins. Fruit 6-locular, containing many seeds in each locule, overlapped and arranged regularly. Seeds flattened and thin, obtuse-triangular or fan shaped, 6-10 mm long, 8-12 mm wide, winged all around, pale brown. Odour, characteristic; taste, slightly bitter.

Identification To 3 g of the powder add 50 ml of ethanol, heat under reflux on a water bath for 1 hour, filter. Evaporate the filtrate to dryness, dissolve the residue in 5 ml of ethanol as the test solution. Extract the reference drug of Fructus Aristolochiae in the same manner, use the extract as the reference solution (1); use a 0.5 mg per ml solution of aristolochic acid CRS in ethanol as the reference solution (2). Carry out the method for thin layer chromatography (Appendix Ⅵ B), using silica gel G as the coating substance and the upper layer of toluene-ethyl acetate-water-formic acid (20 : 10 : 1 : 1) as the mobile phase. Apply in strip separately 5 μl each of the three solutions to the plate. After developing and removal of the plate, dry in air, and examine under ultraviolet light at 365 nm. The fluorescent strips in the chromatogram obtained with the test solution correspond in position and colour to the strips in the chromatogram obtained with the two reference solutions.

Processing *Fructus Aristolochiae* Eliminate foreign matter, sift, and rub the fruit to pieces.

Fructus Aristolochiae (*processed with honey*) Stir-bake the clean Fructus Aristolochiae as described under the method of stir-baking with honey (Appendix Ⅱ D) until not sticky to fingers.

Action To remove *heat* from the lung and relieve cough and dyspnea, and remove *heat* from the large intestine (rectum) to treat hemorrhoid.

Indications Dyspnea asthma, cough and bloody sputum due to *heat* in the lung; bleeding, swollen and painful hemorrhoids due to *heat* in the large intestine.

Usage and dosage 3-9 g.

Storage Preserve in a dry place.

Fructus Aurantii (枳壳, Zhiqiao)

Orange Fruit

Orange Fruit is the dried, immature fruit of *Citrus aurantium* L. and its cultivated varieties (Fam. Rutaceae). The drug is collected in July when the fruit is green yet. Cut in the middle into two parts, dried in the sun or at a low temperature.

Description Semispheroidal, 3-5 cm in diameter. Exocarp dark brown or brown, with granular convexes and sunken oil cavity spots at the apex; remains of style or fruit stalk scar distinct. Mesocarp in transverse section yellowish-white, smooth and slightly prominent, 0.4-1.3 cm thick, with 1-2 rows of oil cavaties at the outer part of pericarp. Texture hard, uneasily broken. Pulp vesicles 7-12, a few up to 15, juice vesicles dried and shrunken, brown to dark brown, containing seeds. Odour, aromatic; taste, bitter and slightly sour.

Identification (1) Powder: Yellowish-white or brownish-yellow, cells of mesocarp subrounded or irregular, most cell walls unevenly thickened and beaded. Epidermal cells of pericarp polygonal, subsquare or rectangular in surface view; stomata subrounded, 16-34 μm in diameter, subsidiary cells 5-9, covered with cuticle in lateral view. Juice vesicle tissues pale yellow or colourless, membranous, epidermal cells narrow and long in surface view, shrunken, crisscross with cells of pericarp and juice vesicle, prisms of calcium oxalate existing in cells of pericarp and juice vesicle, abundant in the cells adjacent to epidermis, rhombic, polygonal or biconical, 3-30 μm in diameter. Spiral and reticulated vessels and tracheids small.
(2) To 0.5 g of the powder add 10 ml of methanol, heat under reflux for 10 minutes, filter. To 1 ml of the filtrate add about 5 mg of potassium tetrahydroborate, mix well, add several drops of hydrochloric acid; a cherry red to purplish-red colour is produced.

Total ash Not more than 7.0 per cent (Appendix Ⅸ K).

Assay Carry out the method for high performance liquid chromatography (Appendix Ⅵ D).

Chromatographic system and system suitability Use octadecylsilane bonded silica gel as the stationary phase and acetonitrile-water (21.5 : 80.5, adjust pH=3 with phosphoric acid) as the mobile phase. As detector a spectrophotometer set at 283 nm. The number of theoretical plates of the column is not less than 2000, calculated with the reference to

the peak of naringin.

Reference solution Weigh accurately 15 mg of naringin CRS (dried to constant weight after decompression) to a 50 ml of volumetric flask, add methanol to volume, mix well and use as the reference solution.

Test solution Weigh accurately about 0.2 g of the powder in a stopper conical flask, add accurately 50 ml of methanol, stopper tightly and weigh, heat and reflux for 1.5 hour, allow to cool, stopper tightly, weigh again, replenish the loss of the solvent with methanol, mix well, filter, discard the initial filtrate, collect accurately 10 ml of the successive filtrate, evaporate to dryness, dissolve the residue with 3-5 ml of water, allow to cool, add to a column of polyamide (50-80 mesh, 2 g, 1.8 cm in inner diameter, in wet-way), wash with 25 ml of water, discard the water. Wash again with 50 ml of methanol, collect the eludes, transfer to a 50 ml volumetric flask, mix well, as the test solution.

Procedure Inject accurately 20 μl of each of the reference solution and the test solution respectively into the column, determine and calculate the content.

It contains not less than 4.0 per cent of naringin ($C_{27}H_{32}O_{14} \cdot 2H_2O$).

Processing *Fructus Aurantii* Irregular arciform and strip-shaped slices, long to 5 cm, wide to 1.3 cm. Transverse section, exocarp brown to dark brown, mesocarp yellowish-white to yellowish-brown, with 1-2 rows of dotted oil cavaties at the outer part of pericarp, sometimes with a few purplish-brown pulp vesicles. Texture hard. Odour, aromatic; taste, bitter and slightly sour.

Fructus Aurantii (stir-baked with bran) Irregular arciform and strip-shaped slices, relatively dark colour, sometimes with charred spots, odour, slightly aromatic.

Action To regulate the flow of *qi*, remove its stagnation, and alleviate distension.

Indications Distending pain in the chest and hypo-chondriac regions due to stagnation of *qi*; indigestion with retention of *phlegm* and *fluid*; gastroptosis, prolapse of the rectum, prolapse of the uterus.

Usage and dosage 3-9 g.

Precaution Be cautious about pregnant women.

Storage Preserve in a cool and dry place, protected from moth.

Note: The main cultivated varieties are *Citrus aurantium* 'Huangpi', *Citrus aurantium* 'Daidai', *Citrus aurantium* 'Chuluan' and *Citrus aurantium* 'Tangcheng'.

Fructus Aurantii Immaturus (枳实, Zhishi)

Immature Orange Fruit

Immature Orange Fruit is the dried young fruit of *Citrus aurantium* L. and its cultivars or *Citrus sinensis* Osbeck (Fam. Rutaceae). The fallen fruit is collected in May and June, removed from foreign matter, cut transversely in the middle into two parts, dried in the sun or at a low temperature; the small fruit dried similarly without cutting.

Description Semispheroidal, a few spheroidal, 0.5-2.5 cm in diameter. Exocarp dark green or dark brownish-green, with granular protrudings and wrinkles, remains of style or fruit stalk scar distinct. Mesocarp in transverse section slightly expanded, yellowish-white or yellowish-brown, 0.3-1.2 cm thick, with 1-2 rows of oil cavities on the outer part, endocarp and juice vesicles brown. Texture hard. Odour, aromatic; taste, bitter and slightly sour.

Identification (1) Powder: Pale yellow or brownish-yellow. Cells of mesocarp subrounded or irregular, most cell walls unevenly thickened and beaded. Epidermal cells of pericarp polygonal, subsquare or rectangular in surface view, stomata subrounded, 18-26 μm in diameter, subsidiary cells 5-9; covered with cuticle in lateral view. Prisms of calcium oxalate existing in cells of pericarp and juice vesicles mostly visible in cells adjacent to epidermis, rhombic, polygonal or biconical, 2-24 μm in diameter. Parenchymatous cells containing yellow or colourless hesperidin crystals, in rounded or amorphous masses, some with radial striations. Fragments of oil cavity abundant, secretory cells slender and curved. Spiral and reticulated vessels and tracheids small.

(2) To 0.5 g of the powder add 10 ml of methanol, ultrasonicate for 20 minutes, filter, evaporate the filtrate to dryness. Dissolve the residue with 0.5 ml of methanol as the test solution. Dissolve synephrine CRS in methanol to produce a solution containing 0.5 mg per ml as the reference solution. Carry out the method for thin layer chromatography (Appendix Ⅵ B), using silica gel G containing a mixture of 1% solution of sodium hydroxide and sodium carboxymethylcellulose as the coating substance and a mixture of *n*-butanol-acetic acid-water (4 : 1 : 5) as the mobile phase. Apply separately 2 μl each of the two solutions to the plate. After developing and removal of the plate, dry in air. Spray with a mixed solution of 0.5% ninhydrin TS in ethanol and heat at 105℃ to the spot clear. The spot in the chromatogram obtained with the test solution corresponds in position and colour to the spot in the chromatogram obtained with the reference solution.

Water Not more than 15.0 per cent (Appendix Ⅸ H, Method 2).

Total ash Not more than 7.0 per cent (Appendix Ⅸ K).

Acid-insoluble ash Not more than 3.0 per cent (Appendix Ⅸ K).

Extractives Carry out the hot extraction method for determination of ethanol-soluble extractives (Appendix Ⅸ A), using 70% ethanol as the solvent, not less than 12.0 per cent.

Assay Carry out the method for high performance liquid chromatography (Appendix Ⅵ D).

Chromatographic system and system suitability Use octadecylsilane bonded silica gel as the stationary phase and a mixture of methanol and mono potassium phosphate solution (dissolve 0.6 g of mono potassium phosphate, 1.0 g of sodium dodecyl sulfate, 1 ml of glacial acetic acid in water and dilute to 1000 ml) (50 : 50) as the mobile phase. As detector a spectrophotometer set at 275 nm. The number of theoretical plates of the column is not less than 2000, calculated with the reference to the peak of synephrine.

Reference solution Dissolve a quantity of synephrine CRS in water, accurately weighed, to produce a solution containing 30 μg per ml as the reference solution.

Test solution Weigh accurately 1 g of the powder in a conical flask with stopper, add 50 ml of methanol, weigh accurately and heat under reflux for 1.5 hours, cool and weigh again, make up the loss in weight with methanol to the initial weight, mix well and filter. Measure accurately 10 ml of the successive filtrate and evaporate to dryness. Dissolve the residue in 10 ml of water, mix well, apply to a column (1.5 cm I.D.) packed with polyamide (60-90 mesh, 2.5 g). Elute with 25 ml of water and collect the eluates, transfer to a 25 ml volumetric flask. Dilute with water to volume and mix well. Filter with a microporous

filter membrane of 0.45 μm and use the successive filtrate as the test solution.

Procedure Inject accurately 10-20 μl of the reference solution and the test solution, respectively, into the column, and calculate the content.
It contains not less than 0.30 per cent of synephrine ($C_9H_{13}NO_2$), calculated with reference to the dried drug.

Processing *Immature Orange Fruit* Eliminate the foreign matter, wash clean, soften thoroughly, cut into thick slices, and dry.
Irregularly strip or circular slices, 2.5 cm long, 1.2 cm wide, 0.3-1.5 cm in diameter. Exocarp in transverse section black-green or dark brown, mesocarp yellowish-white or yellowish-brown, with 1-2 rows of oil cavities on the outer part, endocarp and juice vesicles brown.

Immature Orange Fruit (stir-baked with bran) Stir-bake the slices of Immature Orange Fruit as described under the method for stir-baking with bran (Appendix Ⅱ D) until a deep colour is produced.
Irregularly strip or circular slices; dark colour, some dark spots.

Action To resolve stognacy or *phlegm* and relieve stuffiness sensation in the chest and abdomen.

Indications Stagnation of *qi* marked by indigestion, fullness and distending pain, tenesmus in dysentery, or constipation; pectoral pain and stuffiness sensation due to stagnation of *phlegm* and *qi*; thoracic accumulation gastroptosis, prolapse of the rectum, prolapse of the uterus.

Usage and dosage 3-9 g.

Precaution Be cautious about pregnant women.

Storage Preserve in a cool and dry place, protected from moth.

Note: The cultivated varieties are the same as described under Fructus Aurantii.

Fructus Broussonetiae (楮实子, Chushizi)

Papermulberry Fruit

Papermulberry Fruit is the dried ripe fruit of *Broussonetia papyrifera* (L.) Vent. (Fam. Moraceae). The drug is collected in autumn when ripe, washed clean, dried in the sun, removed from greyish-white, membranous persistent calyx and foreign matter.

Description Somewhat spherical or ovoid, slightly flattened, about 1.5 mm in diameter. Externally reddish-brown, showing reticulated wrinkles or grandular prominences, with ridges on one side and furrows on the other side, some bearing fruit stalk. Texture hard and brittle, easily broken by pressing. Endosperm almost white, oily, Odour, slight; taste, weak.

Identification Powder: Reddish-brown. Palisade cell walls of pericarp mucilaginous, remaining denticulate striate-thickened part, fine awn-like in shape. Crystalliferous sclerenchymatous cells abundant, brownish-yellow, subpolygonal in surface view, containing clusters of calcium oxalate; subrectangular in section view, inner walls extremely thickened, lumina situated along outside, clusters oblong. Sclerenchymatous cells of endocarp extremely flattened, frequently overlapped in many layers with indistinct boundary. Epidermal cells of testa polygonal in surface view, with slightly beaded, unlignified walls and yellowish-brown content containing lumina.

Water Not more than 9.0 per cent (Appendix Ⅸ H, method 1).

Total ash Not more than 8.0 per cent (Appendix Ⅸ K).

Acid-insoluble ash Not more than 1.2 per cent (Appendix Ⅸ K).

Action To replenish the kidney, remove *heat* from the liver, nebula, and promote urination.

Indications Aching and weakness of the loins and knees, consumptive fever, dizziness and blurred vision; nebula; edema.

Usage and dosage 6-12 g.

Storage Preserve in a dry place, protected from moth.

Fructus Bruceae (鸦胆子, Yadanzi)

Java Brucea Fruit

Java Brucea Fruit is the dried ripe fruit of *Brucea javanica* (L.) Merr. (Fam. Simarubaceae). The drug is collected in autumn when ripe, removed from foreign matter, and dried in the sun.

Description Ovoid, 6-10 mm long, 4-7 mm in diameter. Externally black or brown, with raised reticulate wrinkles, lumina irregularly polygonal, obviously ribbed at both sides. Apex acuminate, base having a dented fruit stalk scar, shell hard and brittle. Seeds ovoid, 5-6 mm long, 3-5 mm in diameter, externally whitish or yellowish-white, with reticulate; testa thin, cotyledons milky white, oily. Odour, slight; taste, extremely bitter.

Identification Powder of pericarp: Brown. Epidermal cells polygonal, containing brown contents. Parenchymatous cells polygonal, containing clusters of calcium oxalate, up to 30 μm in diameter, and prisms. Stone cells subrounded or polygonal, 14-38 μm in diameter.
Powder of seed: Yellowish-white. The cells of testa polygonal, slightly elongated. The cells of endosperm and cotyledon containing aleurone grains.

Processing Eliminate the shells and other foreign matter.

Action To remove toxic *heat*, to stop malarial attacks, to relieve dysentery, and to cauterize vegetations.

Indications Dysentery, malaria; external use for vegetation, corn.

Usage and dosage 0.5-2 g to be taken after wrapped in Arillus Longan or in capsules; appropriate quantity for external use.

Storage Preserve in a dry place.

Fructus Canarii (青果, Qingguo)

Chinese White Olive

Chinese White Olive is the dried ripe fruit of *Canarium album* Raeusch. (Fam. Bruseraceae). The drug is collected in autumn when ripe, and dried.

Description Fusiform, both ends obtusely acute, 2.5-4 cm long, 1-1.5 cm in diameter. Externally brownish-yellow or blackish-brown, with irregular wrinkles. Sarcocarp greyish-brown or dark brown, texture hard. Kernel fusiform, dark

reddish-brown, with longitudinal ribs; 3 loculi, each containing 1 seed. Odour, slight; taste of sarcocarp, astringent, slightly sweet on chewing.

Identification Transverse section of pericarp: Exocarp consisting of 1 row of sclerenchymatous cell, containing yellowish-brown contents, and covered with a cuticle. Parenchymatous cell of mesocarp about 10 layers, with vascular bundles scattered, oil cavities mostly scattering at the outside of vascular bundles. Endocarp consisting of some rows of stone cells. Parenchymatous cells containing clusters or prisms of calcium oxalate.

Processing Eliminate foreign matter, wash clean, and dry in the sun. Break into pieces before use.

Action To remove *heat* and cure sore throat, to promote the production of body fluid, and counteract toxicity.

Indications Pain and swelling of the throat, cough; dire thirst; fish or crab poisoning.

Usage and dosage 4.5-9 g.

Storage Preserve in a dry place, protected from moth.

Fructus Cannabis (火麻仁, Huomaren)

Hemp Seed

Hemp Seed is the dried ripe fruit of *Cannabis sativa* L. (Fam. Moraceae). The drug is collected in autumn when ripe, removed from foreign matter, and dried in the sun.

Description Ovoid. 4-5.5 mm long. 2.5-4 mm in diameter. Externally greyish-green or greyish-yellow, with fine and white or brown reticulations, ribbed at both sides, somewhat acute at the apex, with round fruit stalk scar at the base. Pericarp thin and brittle, easily broken. Testa green, cotyledons 2, milky-white and oily. Odour, slight; taste, weak.

Identification To 2 g of the powder add 50 ml of ether, heat under reflux for 1 hour, filter, wash the residue with 20 ml of ether for one time, discard the ether, add 30 ml of methanol to the residue, heat under reflux for 1 hour, filter, evaporate the filtrate to dryness. Dissolve the residue in 2 ml of methanol as the test solution. Prepare a solution of 2 g reference drug of Fructus Cannabis in the same manner as the reference drug solution. Carry out the method for thin layer chromatography (Appendix Ⅵ B), using silica gel GF_{254} as the coating substance and a mixture of toluene-ethyl acetate-formic acid (15 : 1 : 0.3) as the mobile phase. Apply separately 2 μl each of the two solutions to the plate. After developing and removal of the plate, dry in air. Spray with a mixed solution of 1% vanillin in ethanol-sulphuric acid (1 : 1) and heat at 105℃ to the spots clear. The spots in the chromatogram obtained with the test solution correspond in position and colour to the spots in the chromatogram obtained with the reference drug solution.

Processing *Fructus Cannabis* Eliminate foreign matter and pericarp.

Fructus Cannabis (*stir-baked*) Stir-bake the Fructus Cannabis as described under the method for simple stir-baking (Appendix Ⅱ D) until it becomes yellow and scented.

Action To moisten intestines to loose bowel.

Indications Constipation due to *deficiency of* blood and intestinal fluid.

Usage and dosage 9-15 g.

Storage Preserve in a cool and dry place, protected from heat and moth.

Fructus Carotae (南鶴虱, Nanheshi)

Wild Carrot Fruit

Wild Carrot Fruit is the dried ripe fruit of *Daucus carota* L. (Fam. Umbelliferae). The fruit branch is cut in autumn when the fruit is ripe, dried in the sun. The fruit is tapped off, and removed from foreign matter.

Description Cremocarp ellipsoidal, mostly separated into mericarp. Mericarp 3-4 mm long, 1.5-2.5 mm wide. Externally pale greenish-brown or brownish-yellow, apex bearing remains of a style, base obtuse, dorsal surface raised, with 4 narrow-winged subribs, each rib densely covered with 1 row of yellowish-white hooks of each about 1.5 mm long. The dented portion between every 2 ribs having indistinct main ribs, scattered with short hairs. Commissural surface flattened, with 3 hairy veins. Kernel almost white, oily. Texture light. Odour, aromatic when rubbed; taste, slightly pungent and bitter.

Identification (1) Transverse section of mericarp: Cells of exocarp 1 layer, parts of the cells differentiating to unicellular non-glandular hairs at the rib, hairs 86-390 μm long. Large vittae occurring in mesocarp, 1 at the base of each subrib and 2 in the commissural surface. Vittae flattened-oblong, 50-120 μm in diameter, containing yellowish-brown oil droplets, inner side of mainribs with fine vascular bundles. Endocarp consisting of 1 layer of flattened parenchymatous cells. Cells of testa containing reddish-brown contents. Endosperm plump, parenchymatous cells polygonal, with slightly thickened walls, containing fatty oil and aleurone grains with a minute cluster of calcium oxalate. (2) To 1 g of the powder add 20 ml of ether, macerate over night, filter, evaporate the filtrate to dryness. Dissolve the residue in 1 ml of ether as the test solution. Prepare a solution of 1 g of Fructus Carotae reference drug in the same manner as the reference drug solution. Carry out the method for thin layer chromatography (Appendix Ⅵ B), using silica gel G as the coating substance and a mixture of benzene-ethyl acetate-formic acid (8 : 1 : 1) as the mobile phase. Apply separately to the plate 1-2 μl each of the two solutions. After developing and removal of the plate, dry in air. Examine under ultraviolet light at 365 nm, the fluorescent spot in the chromatogram obtained with the test solution corresponds in position and colour to the spot in the chromatogram obtained with the reference solution. Spray with 5% solution of vanillin in sulfuric acid and heat under a current of hot air to the spot distinct. The spot in the chromatogram obtained with the test solution corresponds in position and colour to the spot in the chromatogram obtained with the reference drug solution.

Action To kill worms, and to remove undigested food.

Indications Ascariasis, oxyuriasis, taeniasis, abdominal pain caused by intestinal parasitosis; malnutrition and retention of undigested food due to improper feeding.

Usage and dosage 3-9 g.

Storage Preserve in a ventilated and dry place.

Fructus Carpesii (鹤虱, Heshi)

Common Carpesium Fruit

Common Carpesium Fruit is the dried ripe fruit of *Carpesium abrotanoides* L. (Fam. Compositae). The drug is collected in autumn when ripe, removed from foreign matter, and dried in the sun.

Description Cylindrical, small, 3-4 mm long, less than 1 mm in diameter. Externally yellowish-brown or dark brown, with numerous longitudinal ridges. One end contracted, beak-shaped, and the apex spread to form a greyish-white ring; another end slightly acute, bearing inserted scars. Pericarp thin, fibrous, testa extremely thin and transparent, cotyledons 2, almost white, slightly oily. Odour, characteristic; taste, slightly bitter.

Identification Transverse section: Cells of epicarp 1 row, each containing columnar crystals of calcium oxalate. Several rows of brown parenchymatous cells of mesocarp, shrunken with indistinct bounds, fibre bundles occurring at the ribs, consisting of about ten of thickened and lignified-walled fibres, 1 row of endocarp cells dark brown. Cells of testa flattened, endosperm remained; parenchymatous cells of embryo filled with aleurone grains and fatty oil droplets, the outmost layer cells of cotyledon containing fine crystals of calcium oxalate.

Action To parasties worms, and remove undigested food.

Indications Ascarisis, oxyuriasis, taeniasis; abdominal pain or infantile malnutrition due to intestinal parasitosis.

Usage and dosage 3-9 g.

Storage Preserve in a cool and dry place.

Fructus Caryophylli (母丁香, Mudingxiang)

Clove Fruit

Clove Fruit is the dried fruit of *Eugenia caryophyllata* Thunb. (Fam. Myrtaceae). The drug is collected when nearly ripe, and dried in the sun.

Description Ovoid or oblong, 1.5-3.0 cm long, 0.5-1.0 cm in diameter. Surface yellowish-brown or dark brown, with fine wrinkles. Apex having four persistent calyxes, bended, hook-shaped, remain of a fruit stalk scar at the base. The seeds separated from the fruit shell, cotyledons 2, brown or dark brown, oily, with a longitudinal furrow in the center. Embryo fine pole-shaped. Odour, aromatic; taste, pungent and numb.

Identification (1) Powder: Dark brown. Starch granules numerous, simple granules long ovoid, conchoidal, round or irregular shaped, 14-35 μm in diameter. Fibres visible, single or forming fibre bundles, pale yellowish-brown, long shuttle-shaped, 9-41 μm in diameter. Stone cells singly scattered or grouped, pale yellowish-brown, elongated, sub-triangular or irregular shaped, and some branched visible occasionally, 14-88 μm, with dense striations and distinct pit canals. Clusters of calcium oxalate occurring in the parenchymatous cells, 7-43 μm in diameter, prisms of calcium oxalate occasionally visible. Oil cavities frequently broken.

(2) To 1.5 g of the powder add 5 ml of ether, shake for several minutes, filter, the filtrate is used as the test solution. Prepare a solution of 1.5 g of Fructus Caryophylli reference drug and 5 ml of ether in the same manner as the reference drug solution. Dissolve eugenol CRS in ether to produce a solution containing 0.5 mg per ml as the reference solution. Carry out the method for thin layer chromatography (Appendix Ⅵ B), using silica G as the coating substance and a mixture of petroleum ether (60-90℃) and ethyl acetate (9 : 1) as the mobile phase. Apply 5 μl of each of the three solutions to the plate. After developing and removal of the plate, dry in air, spray with 5% solution of vanillin in sulfuric acid and hear at 105℃. The spot in the chromatogram obtained with the test solution corresponds in position and colour to the spot obtained with the reference solution and the reference drug solution.

Water Carry out the method for the determination of water (Appendix Ⅸ H, method 2), not more than 12.0 per cent.

Total ash Not more than 4.0 per cent (Appendix Ⅸ K).

Extraction Carry out the hot extraction method for determination of ethanol-soluble extractives (Appendix Ⅹ A), using ethanol as the solvent, not less than 15.0 per cent.

Assay Carry out the method for high performance liquid chromatography (Appendix Ⅵ D).

Chromatographic system and system suitability Use octadecylsilane bonded silica gel as the stationary phase, a mixture of methanol and water (65 : 40) as the mobile phase. As detector a spectrophotometer set at 280 nm. The number of theoretical plates of the column is not less than 3000, calculated with the reference to the peak of eugenol CRS.

Reference solution Weigh accurately a quantity of eugenol CRS, dissolve in dehydrated ethanol to produce a solution containing 0.1 mg per ml as the reference solution.

Test solution Weigh accurately 0.3 g of the coarse powder (through No. 2 sieve) to a 25 ml volumetric flask, add dehydrated ethanol to volume, macerate for 24 hours. Mix well, filter, use the successive filtrate as the test solution.

Procedure Inject accurately 10 μl of the reference solution and the test solution into the column respectively, determine, and calculate the content.
It contains not less than 0.65 per cent of eugenol ($C_{10}H_{12}O_2$), calculated with reference to the dried drug.

Processing Eliminate foreign matter. Break to pieces before use.

Action To warm the *middle energizer* to descend adverserising *qi*, and reinforce the kidney to strengthen *yang*.

Indications Hiccuping vomiting, poor appetite, diarrhea, psychroalgia of the epigastrium and abdomen due to *cold* in the spleen and stomach in a *deficiency* syndrome, and impotence due to *deficiency* in the kidney.

Usage and dosage 1-3 g, taken orally or in powder form for external use.

Precaution Incompatible with to Radix Curcumae.

Storage Preserve in a cool and dry place.

Fructus Chaenomelis (木瓜, Mugua)

Common Floweringqince Fruit

Common Floweringqince Fruit is the dried nearly ripe fruit of *Chaenomeles speciosa* (Sweet) Nakai

(Fam. Rosaceae). The drug is collected in summer and autumn when the fruit turns greenish-yellow, boiled in water until the exocarp becomes greyish-white in colour, halved longitudinally, and dried in the sun.

Description Mostly in longitudinally oblong halves, 4-9 cm long, 2-5 cm wide, 1-2.5 cm thick. Externally purplish-red or reddish-brown, with irregular, deep wrinkles; edge of cut surface rolled inwards, pulp reddish-brown, central part dented, brownish-yellow. Seed long-triangular, mostly falling off. Texture hard. Odour, slightly aromatic; taste, sour.

Identification (1) Powder: Yellowish-brown or reddish-brown. Stone cells in group or isolated, colourless, pale yellow or orange, rounded, elliptical or subpolygonal, 20-82 μm in diameter, striation well-defined, pit-canal minute, lumen contain brown or orange substance. Exocarp cell polygonal or subpolygonal. 10-35 μm in diameter, lumen contain brown or reddish-brown substance. Mesocarp parenchymatous cell pale yellow or pale brown, subrounded, wrinkles, containing minute prisms or calcium oxalate.
(2) To 1 g of the powder add 25 ml of ether, heat under reflux for 1 hour, filter and evaporate the residue to dryness. Add 25 ml of ethanol, heat under reflux for 1 hour, cool and filter, evaporate the filtrate to dryness, and dissolve the residue in 1 ml of methanol as the test solution. Prepare a solution of 1 g of Fructus Chaenomelis reference drug in the same manner as the reference drug solution. Carry out the method for thin layer chromatography (Appendix Ⅵ B), using silica gel G as the coating substance and ethyl acetate-formic acid-water (8 : 1.5 : 1) as the mobile phase. Apply separately 3 μl of the test solution and the reference solution to the plate. After developing and removal of the plate, dry in air. Spray with 5% solution of aluminium chloride in ethanol and examine under ultraviolet light at 365 nm. The fluorescent spots in the chromatogram obtained with test solution correspond in position and colour to the spots in the chromatogram obtained with the reference drug solution.

Water Not more than 15.0 per cent (Appendix Ⅸ H, Method 1).

Total ash Not more than 5.0 per cent (Appendix Ⅸ K).

Acid-insoluble ash Not more than 0.6 per cent (Appendix Ⅸ K).

Acidity To 5 g of the powder add 50 ml of water, shake, allow to stand for 1 hour and filter. The pH value of the filtrate is 3.0-4.0 (Appendix Ⅶ G).

Extractives Carry out the hot extraction method for determination of ethanol-soluble extractives (Appendix Ⅹ A), using ethanol as the solvent, not less than 15.0 per cent.

Processing Wash clean, soften or steam thoroughly, cut into thin slices and dry in the sun.

Action To pacify *liver-yang* and lessen contracture, regulate stomach function and dispel *damp*.

Indications Arthritis with ankylosis , aching and heaviness sensation of the loins and knees; systremma due to vomiting and diarrhea; edema and weakness of the legs.

Usage and dosage 6-9 g.

Storage Preserve in a dry place, protected from moisture and moth.

Fructus Chebulae (诃子, Hezi)

Medicine Terminalia Fruit

Medicine Terminalia Fruit is the dried ripe fruit of *Terminalia chebula* Retz. or *Terminalia chebula* Retz. var. *tomentella* Kurt. (Fam. Combretaceae). The drug is collected in autumn and winter when ripe, removed from foreign matter, and dried in the sun.

Description Oblong or ovoid, 2-4 cm long, 2-2.5 cm in diameter. Externally yellowish-brown or dark brown, somewhat lustrous, marked with 5-6 longitudinal ribs and irregular wrinkles, base with a rounded fruit stalk scar. Texture compact. Sarcocarp 2-4 mm thick, yellowish-brown or dark yellowish-brown; kernels 1.5-2.5 cm long, 1-1.5 cm in diameter, pale yellow, rough and hard. Seeds narrowly fusiform, about 1 cm long, 2-4 mm in diameter; testa yellowish-brown, cotyledons 2, white, overlapping and convolute. Odour, slight; taste, sour, astringent, then sweet.

Identification To 3 g of the powder without the core add 10 ml of ethanol, ultrasonicate for 20 minutes, use the supernatant as the test solution. Dissolve gallic acid CRS in ethanol to produce a solution containing 0.5 mg of each per ml as the reference solution. Carry out the method for thin layer chromatography (Appendix Ⅵ B), using silica gel G as the coating substance and a mixture of chloroform-ethyl acetate-formic acid (6 : 4 : 1) as the mobile phase. Apply separately to the plate 3 μl each of the two solutions. After developing and removal of the plate, dry in air, spray with a 2% solution of iron trichloride in ethanol. The spots in the chromatogram obtained with the test solution correspond in position and colour to the spots in the chromatogram obtained with the reference solution.

Water Carry out the method as described under the determination of water (Appendix Ⅸ H, method 1), not more than 13.0 per cent.

Total ash not more than 5.0 per cent (Appendix Ⅸ K).

Acid-insoluble ash not more than 1.0 per cent (Appendix Ⅸ K).

Extractives Carry out the cold maceration method as described under the determination of water-soluble extractives (Appendix Ⅹ A), not less than 30.0 per cent.

Processing *Fructus Chebulae* Eliminate foreign matter, wash clean and dry. Break to pieces before use.

Sarcocarp of Fructus Chebulae Macerate clean Fructus Chebulae briefly, cover to soften, remove the kernels, and dry.

Action To check diarrhea and chronic cough, and soothe the sore throat.

Indications Protracted diarrhea with hematochezia or prolapse of the rectum; chronic cough with sore throat and hoarseness.

Usage and dosage 3-9 g.

Storage Preserve in a dry place.

Fructus Choerospondiatis (广枣, Guangzao)

Axillary Choerospondias Fruit

Axillary Choerospondias Fruit is the dried ripe fruit of *Choerospondias axillaris* (Roxb.) Burtt et Hill (Fam. Anacardiaceae), commonly used by the Mongol nationality. The drug is collected in autumn when ripe, removed from foreign matter and dried.

Description Ellipsoid or subovoid, 2-3 cm long, 1.4-2 cm in diameter. Externally blackish-brown or brown, somewhat lustrous, irregularly shrunken; showing a fruit stalk scar at the base. Pulp thin, brown. Texture hard and brittle. Kernel subovoid, yellowish-brown, apex having 5, occasionally 4 or 6, distinct small holes, each possessing a seed. Odour, slight taste, sour.

Identification (1) Powder: Brown. Stone cells of endocarp subrounded, elliptical, fusiform, retangular or irregular, some elonged to fibre-like or branched, 14-72 μm in diameter, 25-294 μm long, with thickened walls and distinct pit canals, lumina containing pale yellowish-brown contents. Fibers of endocarp lignified, with thickened or slightly thickened walls, crisscross arranged, and some of lumina containing yellowish-brown contents. Cells of exocarp subpolygonal in lateral view, containing brown contents, and subrectangular in lateral view, radially elongated, the outer and radial walls cutinized-thickened. Parenchymatous cells of mesocarp containing cluster and a few prisms of calcium oxalate, the clusters 17-42 μm in diameter, prisms rhomboid or irregular, 10-48 μm long, 7-27 μm in diameter.

(2) To 2 g of the powder, add 20 ml of 70% ethanol, heat under reflux for 15 minutes, filter, evaporate the filtrate to dryness, add 10 ml of ethyl acetate to dissolve, filter, transfer 1 ml of filtrate on a evaporating dish, evaporate to dryness, add 1 ml of saturated boric acid in acetone and 1 ml of 10% citric acid in acetone, respectively, a yellowish-green colour is produced, continually evaporate to dryness, examine under the ultraviolet light at 365 nm, a yellowish-green fluorescent is produced; add 1 ml of filtrate into the test tube, evaporate to dryness, add 1 ml of methanol to dissolve residue, add 3-4 drops of aluminium chloride TS, the colour of the solution somewhat turns dark, apply to filtering paper, examine under ultraviolet light at 365 nm, a yellowish-green fluorescent is produced.

(3) To 5 g of the powder add 30 ml of 70% ethanol, heat under reflux for 30 minutes, filter. Evaporate the filtrate to about 2 ml, add 5 ml of water to dissolve, extract with ether for 2 times, each of 15 ml, combine the ether solutions, evaporate to dryness, dissolve the residue with 1 ml of ethyl acetate as the test solution. Prepare a ethanol solution of gallic acid CRS containing 1 mg per ml as the reference solution. Carry out the method for thin layer chromatography (Appendix Ⅵ B), using silica gel G containing sodium carboxymethylcellulose as the coating substance and a mixture of chloroform-acetone-formic acid (7∶2∶1) as the mobile phase. Apply separately to the plate 5 μl each of the two solutions. After developing (to 15 cm) and removal of the plate, dry in air. Fumigate with free ammonia. The fluorescent spot in the chromatogram obtained with the test solution corresponds in position and colour to the spot in the chromatogram obtained with the reference solution.

Action To promote the flow of *qi* and blood, replenish the heart and ease the mind.

Indications Stagnation of *qi* and blood stasis marked by pectoral pain, palpitation and shortness of breath; restlessness.

Usage and dosage 1.5-2.5 g.

Storage Preserve in a cool and dry place.

Fructus Citri (香橼, Xiangyuan)

Citron Fruit

Citron Fruit is the dried ripe fruit of *Citrus medica* L. or *Citrus wilsonii* Tanaka (Fam. Rutaceae). The drug is collected in autumn when ripe, cut in fresh, dried in the sun or at a low temperature. The fruit of *Citrus wilsonii* can be used wholly or cut in the middle into two parts, dried in the sun or at a low temperature.

Description *Fruit of Citrus medica* Rounded or oblong slices, 4-10 cm in diameter, 0.2-0.5 cm thick. In transverse slices, the exocarp yellow or yellowish-green, the edge sinuous, scattering with sunken oil-spots; mesocarp 1-3 cm thick, yellowish-white, with irregular reticulated prominent vascular bundles; juice vesicles separated into 10-17 loculi. In longitudinal slices, the stele relatively thick. Texture soft and pliable. Odour, aromatic; taste, slightly sweet, bitter and pungent.

Fruit of Citrus wilsonii Subspherical, hemispherical or rounded slices, 4-7 cm in diameter. Externally blackish-green or yellowish-brown, with numerous sunken oil spots and reticulated wrinkles; remains of style and a prominent ring at the apex and remains of fruit stalk at the base. Texture hard. In cut surface or in transverse cut slices, oil spots distinct at the border, mesocarp about 0.5 cm thick, juice vesicles in 9-11 loculi, brown or pale reddish-brown, occasionally with yellowish-white seeds. Odour, aromatic; taste, sour and bitter.

Identification Macerate 0.25 g of the powder with 30 ml of petroleum ether (60-90℃) for 1 hour, ultrasonicate for 20 minutes, cool and filter. Evaporate the filtrate to dryness, and dissolve the residue in 1 ml of petroleum ether (60-90℃) as the test solution. Prepare a solution of 1 g of Fructus citri reference drug in the same manner as the reference drug solution. Carry out the method for thin layer chromatography (Appendix Ⅵ B), using silica gel G as the coating substance and a mixture of cyclohexane and ethyl acetate (5∶1) as the mobile phase. Apply separately 5-10 μl of the test solution and the reference drug solution to the plate. After developing and removal of the plate, dry in air. Spray with 3% solution of vanillin in sulfuric acid and heat to the spots clear. The spots in the chromatogram obtained with test solution correspond in position and colour to the spots in the chromatogram obtained with the reference drug solution.

Processing Break the whole one to pieces; soften the slices thoroughly, cut into slivers and dry in the air.

Action To regulate the *qi* flow the liver, spleen and stomach, and resolve *phlegm*.

Indications Stagnation of *qi* in the *liver* and stomach with manifestions of distending pain in the chest and hypochondria, fullness and stuffiness sensation in the epigastrium, vomiting and belching; cough with copious

expectoration.

Usage and dosage 3-9 g.

Storage Preserve in a cool and dry place, protected from mould and moth.

Fructus Citri Sarcodactylis (佛手, Foshou)

Finger Citron

Finger Citron is the dried fruit of *Citrus medica* L. var. *sarcodactylis* Swingle (Fam. Rutaceae). The drug is collected in autumn when the fruit is turning yellow, cut longitudinally into slices, dried in the sun or at a low temperature.

Description Subelliptical or ovate slices, usually wrinkled or curved. 6-10 cm long, 3-7 cm wide, 2-4 mm thick. The apex somewhat wide, frequently with 3-5 finger-shaped lobes, and the base somewhat narrow, sometimes a scar of fruit stalk visible. Exocarp yellowish-green or orange-yellow, with wrinkles and oil spots. Mesocarp yellowish-white, scattered with uneven, linear or pointed vascular bundles. Texture hard and fragile, but pliable when moistened. Odour, aromatic; taste, slightly sweet, then bitter.

Identification (1) Powder: Pale brownish-yellow. Parenchymatous cells of mesocarp numerous, irregular or subrounded, walls unevenly thickened. Epidermal cells of pericarp irregularly polygonal in surface view, stomata occationally visible. Parenchymatous cells containing numerous prisms of calcium oxalate with polygonal, rhombic or biconelike.

(2) To 1 g of the powder add 10 ml of dehydrated ethanol, ultrasonicate for 20 minutes, filter, evaporate the filtrate to dryness, dissolve it in 0.5 ml of dehydrated ethanol as the test solution. Prepare a solution of Fructus Citri Sarcodactylis reference drug in the same manner as the reference drug solution. Carry out the method for thin layer chromatography (Appendix Ⅵ B), using silica gel G as the coating substance and a mixture of *n*-cyclohexane-ethyl acetate (3 : 1) as the mobile phase. Apply separately 2 μl each of the above two solutions to the plate. After developing and removal of the plate, dry in air, examine under ultraviolet light at 365 nm. The spots in the chromatogram obtained with the test solution correspond in position and colour to the spots in the chromatogram obtained with the reference drug solution.

Water Carry out the method for determination of water (Appendix Ⅸ H); not more than 15 per cent.

Extractives Carry out the method for determination of ethanol soluble extractives, hot extraction method (Appendix Ⅹ A), using ethanol as the solvent; not less than 10.0 per cent.

Action To regulate the *qi* flow of the liver and stomach, and relieve pain.

Indications Stagnation of *qi* of the liver and stomach marked by distending pain in the chest and hypochondriac regions, stuffiness feeling in the stomach, poor appitite and vomiting.

Usage and dosage 3-9 g.

Storage Preserve in a dry place, protected from mould and moth.

Fructus Cnidii (蛇床子, Shechuangzi)

Common Cnidium Fruit

Common Cnidium Fruit is the dried ripe fruit of *Cnidium monnieri* (L.) Cuss. (Fam. Umbelliferae). The drug is collected in summer or autumn when ripe, removed from foreign matter, and dried in the sun.

Description Cremocarp, ellipsoidal, 2-4 mm long, about 2 mm in diameter. Externally greyish-yellow or greyish-brown; with 2 outcurved stylopods at the summit, and sometimes with a fine fruit stalk at the base. Dorsal surface of mericarps with five thin and longitudinal ridges, commissural surface flattened, with two brown and slightly raised longitudinal ribs. Pericarp lax and fragile, easily rubbed off, seed small, greyish-brown and oily. Odour, aromatic; taste, pungent, cool and numb.

Identification (1) Powder: Yellowish-green. Vittae frequently broken, inner walls containing golden yellow secretions, subrounded oil droplets visible. Epidermal cells subrectangular, anticlinal walls sinuous or beaded. Calcium oxalate clusters or subprisms, 3-6 μm in diameter. Parenchymatous cell subrounded, pale yellow or colourless, reticulated striations visible on surface.

(2) To about 0.3 g of the coarse powder, add 5 ml of ethanol, ultrasonicate for 5 minutes, lay aside for a while, and use the supernatant as the test solution. Dissolve osthol CRS with ethanol to produce a solution containing 1 mg per ml as the reference solution. Carry out the method for thin layer chromatography (Appendix Ⅵ B), using silica gel G containing sodium carboxymethylcellulose as the coating substance and a mixture of benzene-ethyl acetate-*n*-hexane (3 : 3 : 2) as the mobile phase. Apply separately 2 μl each of the two solutions to the plate. After developing and removal of the plate, dry in air, and examine it under ultraviolet light at 365 nm. The fluorescent spot in the chromatogram obtained with the test solution corresponds in position and colour to the spot obtained with the reference solution.

Water Not more than 13.0 per cent (Appendix Ⅸ H, Method 1).

Total ash Not more than 13.0 per cent (Appendix Ⅸ K).

Acid-insoluble ash Not more than 6.0 per cent (Appendix Ⅸ K).

Extractives Carry out the cold maceration method for determination of ethanol-soluble extractives (Appendix Ⅹ A), using ethanol as the solvent, not less than 7.0 per cent.

Assay Carry out the method for high performance liquid chromatography (Appendix Ⅵ D).

Chromatographic system and system suitability Use octadecylsilane bonded silica gel as the stationary phase and a mixture of acetonitrile and water (65 : 35) as the mobile phase. As detector a spectrophotometer set at 322 nm. The number of theoretical plates of the column is not less than 3000, calculated with the reference to the peak of osthole.

Reference solution Dissolve a quantity of osthole CRS, accurately weighed, in ethanol to produce a solution of 45 μg per ml.

Test solution Weigh accurately 0.1 g of the powder (through No. 3 sieve) in a conical flask with stopper, add 25

ml of dehydrated ethanol, accurately measured, weigh accurately, allow to stand for 2 hours and ultrasonicate (power, 300 W; frequency, 50 kHz) for 30 minutes, cool and weigh again, make up the loss in weight with dehydrated ethanol to the initial weight and mix well. Measure accurately 5 ml of the supernatant to a 10 ml volumetric flask, dilute with dehydrated ethanol to volume and mix well.

Procedure Inject accurately 10 μl of the reference solution and the test solution, respectively, into the column, and calculate the content.
It contains not less than 1.0 per cent of osthole ($C_{15}H_{16}O_3$), calculated with reference to the dried drug.

Action To warm the kidney and promote virility, remove *damp*, dispel *wind*, and kill microorganisms.

Indications Impotence, frigidity, excessive leukorrhea caused by *cold-damp*; lumbago due to attack of *damp*; external use for eczema, vulval itching, trichomonas vaginitis.

Usage and dosage 3-9 g; appropriate quantity to be made into hot decoction for fumigation and wash, or to be ground into powder for topical application after mix with liquid.

Storage Preserve in a dry place.

Fructus Corni (山茱萸, Shanzhuyu)

Asiatic Cornelian Cherry Fruit

Asiatic Cornelian Cherry Fruit is the dried ripe sarcocarp of *Cornus officinalis* Sieb. et Zucc. (Fam. Cornaceae). The fruit is collected in later autumn and early winter when the pericarp turns red, baked over a soft fire or treated with boiling water for a moment, removed from kern in time and dried.

Description Irregularly flaky or bladdery, 1-1.5 cm long and 0.5-1 cm wide. Externally purplish-red to purplish-black, shrunken, lustrous. Sometimes with a rounded scar of persistent calyx at the apex and a scar of fruit stalk at the base. Texture soft. Odour, slight; taste, sour, astringent and slightly bitter.

Identification (1) Powder: Reddish-brown. Epidermal cells of pericarp polygonal or subrectangular in surface view, 16-30 μm in diameter, anticlinal walls beaded, outer periclinal walls granularly cutinized and thickened, lumen containing pale orange-yellow contents. Cells of mesocarp orange-brown, mostly shrunken. Clusters of calcium oxalate rare 12-32 μm in diameter. Stone cells subsquare, ovoid or rectangular, pits obvious and with a large lumen.
(2) To 0.5 g of the powder, add 10 ml of ethyl acetate, ultrasonicate for 15 minutes, filter. Evaporate the filtrate to dryness. Dissolve the residue with 2 ml of dehydrated ethanol as the test solution. Dissolve ursolic acid CRS in dehydrated ethanol to produce a solution containing 1 mg per ml as the reference solution. Carry out the method for thin layer chromatography (Appendix Ⅵ B), using silica gel G as the coating substance and the mixture of toluene, ethyl acetate and formic acid (20 : 4 : 0.5) as the mobile phase. Apply separately 5 μl of each of two solutions to the plate. After developing and removal of the plate, dry in air, spray with a 10% sulfuric acid in ethanol and heat at 105℃ to the spot clear. Examine in daylight, a violet red spot in the chromatogram obtained with the test solution corresponds in position and colour to the spot in the chromatogram obtained with the reference solution. Examine under ultraviolet light at 365 nm, an orange fluorescent spot in the chromatogram obtained with the test solution corresponds in position and colour to the spot in the chromatogram obtained with the reference solution.

Foreign matter (kerns and fruit stalks) Not more than 3 per cent (Appendix Ⅸ A).

Water Carry out the method as described under the determination of water (Appendix Ⅸ H, method 1), not more than 16.0 per cent.

Total ash Not more than 6.0 per cent (Appendix Ⅸ K).

Acid-insoluble ash Not more than 0.5 per cent (Appendix Ⅸ K).

Extractives Carry out the cold maceration method as described under the determination of water-soluble extractives (Appendix Ⅹ A), not less than 50.0 per cent.

Assay Carry out the method for high performance liquid chromatography (Appendix Ⅵ D).

Chromatographic system and system suitability Use octadecylsilane bonded silica gel as the stationary phase and a mixture of acetonitrile and water (15 : 85) as the mobile phase. As detector a spectrophotometer set at 240 nm. The number of theoretical plates of the column is not less than 3000, calculated with the reference to the peak of loganin.

Reference solution Dissolve a quantity of loganin CRS, accurately weighed, in 80% methanol to prepare a solution containing 40 μg per ml as the reference solution.

Test solution Weigh accurately 0.1 g of the powder (through No. 3 sieve) in a stopper conical flask, add 25 ml of 80% methanol accurately and weigh, heat under reflux for 1 hour, cool and weigh accurately again, replenish the loss of the solvent with 80% methanol, mix well and filter.

Procedure Inject accurately 10 μl of the reference solution and 10 μl of the test solution into the column, respectively, and calculate the content.
It contains not less than 0.60 per cent of loganin ($C_{17}H_{26}O_{10}$), calculated with reference to the dried drug.

Processing *Pulp of Fructus Corni* Eliminate foreign matter and remained kerns.

Pulp of Fructus Corni (processed with wine) Stew or steam the pulp of Fructus Corni as described under the method for stewing with wine or steaming with wine (Appendix Ⅱ D) until the wine is absorbed entirely.

Action To replenish the liver and kidney, restrain seminal emission and relieve collapse.

Indications Dizziness, tinnitus, aching pain in the loins and knees, impotence, seminal emission, enuresis, frequent urination, metrorrhagia and metrostaxis and leukorrhea; collapse with profuse sweating; diabetes.

Usage and dosage 6-12 g.

Storage Preserve in a dry place, protected from moth.

Fructus Crataegi (山楂, Shanzha)

Hawthorn Fruit

Hawthorn Fruit is the dried ripe fruit of *Crataegus pinnatifida* Bge. var *major* N. E. Br., or *Crataegus pinnatifida* Bge. (Fam. Rosaceae).

The drug is collected in autumn when ripe, cut into slices, and dried.

Description Rounded slices shrunken and uneven, 1-2.5 cm in diameter, 2-4 mm thick. Externally red, wrinkled, with small greyish-white spots. Pulp dark yellow to pale brown. Transverse slices of the middle part showing 5 pale yellow kerns, mostly fallen off, and loculi hollowed. Some slices exhibiting a slender fruit stalk or remains of calyx. Odour, slightly aromatic; taste, sour and slightly sweet.

Identification To 1 g of the powder add 4 ml of ethyl acetate, ultrasonicate for 15 minutes, filter, use the filtrate as the test solution. Dissolve ursolic acid CRS in methanol to produce a solution containing 1 mg per ml as the reference solution. Carry out the method for thin layer chromatography (Appendix Ⅵ B), using silica gel G as the coating substance and a mixture of toluene-ethyl acetate-formic acid (20∶4∶0.5) as the mobile phase. Apply separately 4 μl each of the above two solutions to the plate. After developing and removal of the plate, dry in air. Spray with a solution of sulphuric acid in ethanol (3→10) and heat at 80℃ to the spot distinct. The violet-red spot under sunlight and orange-yellow spot under ultraviolet at 365 nm respectively, in the chromatogram obtained with the test solution correspond in position and colour to the spots in the chromatogram obtained with the reference solution.

Water Not more than 12.0 per cent (Appendix Ⅸ H, method 1).

Total ash Not more than 3.0 per cent (Appendix Ⅸ K).

Extractives Carry out the hot extraction method for determination of ethanol-soluble extractives (Appendix Ⅹ A), using ethanol as the solvent, not less than 21.0 per cent.

Assay Soak about 1 g of the fine powder, accurately weighed, in 100 ml of water, accurately measured, for 4 hours with occasional shaking, and filter. To 25 ml of the filtrate, accurately measured, add 50 ml of water, 2 drops of phenolphthalein IS, titrate with sodium hydroxide (0.1 mol/L) VS and calculate the content. Each ml of sodium hydroxide (0.1 mol/L) VS is equivalent to 6.404 mg of $C_6H_8O_7$.
It contains not less than 5.0 per cent of organic acids, calculated as citric acid ($C_6H_8O_7$), with reference to the dried drug.

Processing *Fructus Crataegi* Eliminate foreign matter and fallen kernels.

Fructus Crataegi (*stir-baked*) Stir-bake the clean Fructus Crataegi as described under the method for simple stir-baking (Appendix Ⅱ D) until darken in colour.
Pulp yellowish-brown, few dark spots. Odour, slightly aromatic; taste, sour and slightly sweet. Identification complies with the test for identification described under Fructus Crataegi. Assay carry out the test for assay described under Fructus Crataegi. It contains not less than 4.0 per cent of organic acids, calculated as citric acid ($C_6H_8O_7$) on the dried basis.

Fructus Crataegi (*charred*) Stir-bake the clean Fructus Crataegi as described under the method for simple stir-baking (Appendix Ⅱ D) until it becomes burnt-brown externally and yellowish-brown internally.
Burnt-brown externally and yellowish-brown internally. Odour, slightly aromatic; taste, sour and slightly sweet. Identification complies with the test for identification described under Fructus Crataegi. Assay carry out the test for assay described under Fructus Crataegi. It contains not less than 4.0 per cent of organic acids, calculated as citric acid ($C_6H_8O_7$) on the dried basis.

Action To stimulate digestion and promote the functional activity of the stomach, improve the normal flow of *qi* and dissipate *blood stasis*.

Indications Stagnation of undigested meat with epigastric distension, diarrhea and abdominal pain; amenorrhea due to *blood stasis*, epigastric pain or abdominal colic after childbirth; hernial pain; hyperlipemia.

Fructus Crataegi (*charred*) Has more digestant action and is particularly useful for stagnation of undigested meat and diarrhea with inadequate discharge from the bowels.

Usage and dosage 9-12 g.

Storage Preserve in a ventilated and dry place, protected from moth.

Fructus Crotonis (巴豆, Badou)

Croton Fruit

Croton Fruit is the dried ripe fruit of *Croton tiglium* L. (Fam. Euphorbiaceae). The drug is collected in autumn when ripe, piled up for 2-3 days, spread out, and dried.

Description Ovoid, usually 3-ribbed, 1.8-2.2 cm long, 1.4-2 cm in diameter. Externally greyish-yellow or slightly deep, with 6 longitudinal lines, apex truncate, base with a fruit stalk scar, 3 loculi in the shell each containing 1 seed. Seed slightly flattened-elliptical, 1.2-1.5 cm long, 7-9 mm in diameter; externally brown or greyish-brown, with a pointed hilum and a caruncle scar at one end, a slightly dented chalaza at other end, and a raphe between two ends; testa thin and brittle, tegmen white, membranous; kernels yellowish-white, oily. Odour, slight; taste pungent.

Identification To 0.1 g of the coarse powder of the kernels, add 10 ml of petroleum ether (30-60℃), ultrasonicate for 20 minutes, filter, use the filtrate as the test solution. Produce a solution of 0.1 g of Fructus Crotonis reference drug in the same manner as the reference drug solution. Carry out the method for thin layer chromatography (Appendix Ⅵ B), using silica gel G as the coating substance and the mixture of chloroform and petroleum ether (60-90℃) (2∶1) as the mobile phase. Apply separately to the plate 1-3 μl of the test solution and 2 μl of the reference drug solution. After developing and removal of the plate, dry in air, spray with 10% sulfuric acid in ethanol and heat at 105℃ to the spot clear. The spots in the chromatogram obtained with the test solution correspond in position and colour to the spots in the chromatogram obtained with the reference drug solution.

Water Carry out the method for the determination of water (Appendix Ⅸ H, method 1), not more than 12.0 per cent.

Total ash Not more than 5.0 per cent (Appendix Ⅸ K).

Acid-insoluble ash Not more than 1.0 per cent (Appendix Ⅸ K).

Assay Weigh accurately 1 g of the powder, to a Soxhlet's extractor, add a quantity of ether, and heat under reflux on a water bath for 8 hours until the fatty oil is fully extracted, transfer the extract to a evaporating dish dried previously to constant weight, evaporate the solvent at a low temperature on a water bath. Dry the residue for 1 hour at 100℃, transfer to a desiccator, cool for 30 min, and weigh accurately. It contains not less than 22.0 per cent of fatty oil, calculated with reference to the dried drug.

Processing *Fructus Crotonis* Remove the coats to take the kernels.

Action To cause corrosion by external use.

Indications Malignant ulcer, scabies, wart.

Usage and dosage Appropriate quantity to be ground into powder for topical application or pounded into paste and wrapped in a piece of gauze for rubbing onto the lesion.

Precaution Contraindicated in pregnancy. Incompatible with Semen Pharbitidis.

Storage Preserve in a cool and dry place.

Fructus Evodiae (吴茱萸, Wuzhuyu)

Medicinal Evodia Fruit

Medicinal Evodia Fruit is the dried and nearly ripe fruit of *Evodia rutaecarpa* (Juss.) Benth., *Evodia rutaecarpa* (Juss.) Benth. var. *officinalis* (Dode) Huang or *Evodia rutaecarpa* (Juss.) Benth. var. *bodinieri* (Dode) Huang (Fam. Rutaceae). The fruit spur is cut off from August to November when the fruit indehiscent, dried in the sun or at a low temperature, removed from shoot, leaf, fruit stalk and foreign matter.

Description Spheroidal or slightly flattened-pentagon spheroidal, 2-5 mm in diameter. Externally dark yellowish-green to brown, rough, with numerous spotted protrudings or depressed oil dots. A pentagon-stellate cleft present at the apex and a yellow-tomentose fruit stalk at the base. Texture hard and fragile. Transverse section showing 5-locular ovary, each locule possessing 1-2 yellowish seeds. Odour, strong aromatic; taste, pungent and bitter.

Identification (1) Powder: Brown. Non-glandular hairs 2-6 celled, 140-350 μm long, warts obvious, some lumina containing brownish-yellow to brownish-red contents. Glandular hairs with a 7-14 celled head, elliptical, usually containing yellowish-brown contents, and a 2-5 celled stalk. Clusters of calcium oxalate frequently found, 10-25 μm in diameter; prisms occasional found. Stone cells subrounded or rectangular, 35-70 μm in diameter, with large lumina. Pale yellow fragments of oil cavities sometimes visible.
(2) To 0.4 g of the powder, add 10 ml of ethanol, stand for 30 minutes, ultrasonicate for 30 minutes, filter, use the filtrate as the test solution. Prepare a solution of 0.4 g of Medicinal Evodia Fruit reference drug in the same manner as the reference drug solution. Dissolve rutaecarp CRS in ethanol to produce a solution containing 0.2 mg per ml as the reference solution. Carry out the method for thin layer chromatography (Appendix Ⅵ B), using silica gel G as the coating substance and a mixture of cyclohexane, ethyl acetate, methanol, and triethylamine (19 : 5 : 1 : 1) as the mobile phase. Apply separately to the plate 2 μl each of the three solutions. After developing and removal of the plate, spray with a solution of 10% sulfuric acid of ethanol, dry in air. Examine under ultraviolet light at 365 nm. The spots in the chromatogram obtained with test solution correspond in position and colour to the spots in the chromatogram obtained with the reference drug solution and the reference solution.

Foreign matter Not more than 7 per cent (Appendix Ⅸ A).

Water Not more than 15.0 per cent (Appendix Ⅸ H, method 1).

Total ash Not more than 10.0 per cent (Appendix Ⅸ K).

Acid-insoluble ash Not more than 1.0 per cent (Appendix Ⅸ K).

Assay Carry out the method for high performance liquid chromatography (Appendix Ⅵ D).

Chromatographic system and system suitability Use octadecylsilane bonded silica gel as the stationary phase and a mixture of acetonitrile-octyl sodium sulfonate (43 : 57) as the mobile phase. As detector a spectrophotometer set at 225 nm. The number of theoretical plates of the column is not less than 3000, calculated with the reference to the peak of evodiamine.

Reference solution Weigh accurately a quantity of evodiamine CRS and rutaecarpine CRS respectively, add ethanol to prepare a solution containing 10 μg respectively per ml and use as the reference solution.

Test solution Weigh accurately about 0.2 g of the powder, add 90 ml of ethanol, ultrasonicate for 40 minutes, allow to cool, add ethanol to the volume, mix well and use as the test solution.

Procedure Inject accurately 10 μl each of the reference solution and the test solution respectively into the column, determine and calculate the content.
It contains not less than 0.15 per cent of evodiamine ($C_{19}H_{17}N_3O$) and rutaecarpine ($C_{18}H_{13}N_3O$), calculated with reference to the dried drug.

Processing *Fructus Evodiae* Eliminate foreign matter.

Fructus Evodiae (prepared) Pound Radix Glycyrrhizae to pieces and decoct in a proper amount of water. Remove the residue, add clean Fructus Evodiae in a covered container to absorb the decoction entirely. Stir-bake until partially dry and then dry in the sun. To each 100 kg of Fructus Evodiae add 6 kg of Radix Glycyrrhizae in the processing.

Action To dispel *cold* and alleviate pain, relieve vomiting, and check diarrhea.

Indications Headache accompanied by retching and cold limbs; abdominal colic; weakness and edema of the legs; dysmenorrhea; epigastric distension and pain with vomiting and acid regurgitation; diarrhea occurring before dawn daily; hypertension. External use for ulcers on the mouth.

Usage and dosage 1.5-4.5 g; appropriate quantity for external use.

Storage Preserve in a cool and dry place.

Fructus Foeniculi (小茴香, Xiaohuixiang)

Fennel

Fennel is the dried ripe fruit of *Foeniculum vulgare* Mill. (Fam. Umbelliferae). The plant is cut in autumn when the fruit nearly ripe, dried in the sun, and then the drug is tapped off and removed from foreign matter.

Description Cremocarp, cylindrical, some slightly curved, 4-8 mm long, 1.5-2.5 mm in diameter. Externally yellowish-green or pale yellow, tapering slightly towards both ends, apex bearing remains of yellowish-brown projecting stylopodium, sometimes having a small fruit stalk at the base. Mericarp elongated-elliptical, with each dorsal

surface bearing five ribs and commissural surface flattened and broad. Transverse section showing a pentagonal, the four sides of dorsal surface nearly equal in length. Odour, characteristically aromatic; taste, slightly sweet and pungent.

Identification (1) Transverse section of mericarp: Exocarp consisting of 1 layer of flattened cells, covered cuticle at outside. Mesocarp with 5 ribs each containing a vascular bundle surrounded by numerous lignified reticulate cells. Vittae 6, of 4 situated in the dorsal, with a large, elliptical and brown vitta between every 2 ribs, and 2 commissural. Endocarp consisting of 1 layer of flattened thin-walled cells varying in length. The testa cells compressed and elongated, containing brown contents. Endosperm cells polygonal, filled with aleurone grains, each embedding a minute cluster of calcium oxalate.
(2) To 2 g of the powder add 20 ml of ether, ultrasonicate for 10 minutes, filter and evaporate the filtrate to dryness. Dissolve the residue in 1 ml of chloroform as the test solution. Dissolve anisic aldehyde CRS in ethanol to produce a solution containing 1 μg per ml as the reference solution. Carry out the method for thin layer chromatography (Appendix Ⅵ B), using silica gel G containing sodium carboxylmethylcellulose as the coating substance and a mixture of petroleum ether (60-90℃)-ethyl acetate (17 : 2.5) as the mobile phase. Apply separately 10 μl each of the two solutions to the plate. After developing to 8 cm and removal of the plate, dry in air. Spray with a solution of dinitrophenylhydrazine TS. The orange-red spot in the chromatogram obtained with the test solution corresponds in position and colour to the spot in the chromatogram obtained with the reference solution.

Foreign matter Not more than 4.0 per cent (Appendix Ⅸ A).

Total ash Not more than 10.0 per cent (Appendix Ⅸ K).

Assay Carry out the method for determination of volatile oil (Appendix Ⅹ D).
It contains not less than 1.5 per cent (ml/g) of volatile oil.

Processing *Fructus Foeniculi* Eliminate foreign matter.

Fructus foeniculi (*processed with salt*) Stir-bake the clean Fructus Foeniculi as described under the method for processing with salt-water (Appendix Ⅱ D) to yellowish.

Action To dispel *cold* and relieve pain, and regulate the stomach function.

Fructus foeniculi (*processed with salt*) To dispel *cold* from the interior and warm the *kidney*, and relieve pain.

Indications Abdominal cold pain and cold extremities; dysmenorrhea with cold pain in the abdomen; distending pain in the epigastrium with poor appitite, vomiting and diarrhea; hydrocele of tunica vaginalis.

Fructus Foeniculi (*processed with salt*) Abdominal cold pain and cold extremities; contracting pain of testis dysmenorrhea with abdominal pain caused by *cold*.

Usage and dosage 3-6 g.

Storage Preserve in a cool and dry place.

Fructus Forsythiae
(连翘, Lianqiao)

Weeping Forsythia Capsule

Weeping Forsythia Capsule is the dried fruit of *Forsythia suspensa* (Thunb.) Vahl (Fam. Oleaceae). The drug is collected in autumn when nearly ripe and still greenish, removed from foreign matter, steamed thoroughly and dried in the sun (known as "Qingqiao"); or the drug is collected when fully ripe, dried, and removed from foreign matter (known as "Laoqiao")

Description Long ovoid to ovoid, slightly compressed, 1.5-2.5 cm long, 0.5-1.3 cm in diameter. Externally with irregular longitudinal wrinkles, numerous raised small maculates, and a longitudinal furrow on each of the two surfaces. Apex acute, bearing a small fruit stalk or its scar at the base. "Qingqiao" mostly indehiscent, externally greenish-brown, with less small greyish-white maculates, texture hard; seeds numerous, yellowish-green, slender, winged at one side. "Laoqiao" dehiscent from apex or to two segments, outer surface yellowish-brown or reddish-brown, inner surface mostly pale yellowish-brown, smooth, with a longitudinal septum. Texture brittle; seeds brown, mostly fallen off. Odour, slightly aromatic; taste, bitter.

Identification (1) Transverse section of pericarp: Exocarp consisting of 1 row of epidermal cells, with thickened outer and lateral walls and covered with cuticle. Mesocarp composed of vascular bundles scattered in parenchyma at the outer side, and many layers of stone cells at the inner side, elongated, subrounded or oblong, wall thickness variable, mostly tangentially parqueted and extended to the cells of the septum; endocarp consisting of 1 layer of parenchymatous cells.
(2) To 1 g of the powder add 30 ml of chloroform, heat under reflux for 1 hour, filter, discard the filtrate, evaporate the residue to dryness. Add 40 ml of methanol, heat under reflux for 1 hour, filter, condense the filtrate to about 1 ml. Apply the filtrate to a column (1-1.2 cm I.D.) containing 3 g of polymer (14-30 mesh) pre-elute with 50 ml of water. Wash with 50 ml of water, discard the water washing, then wash with 100 ml of ethanol, collect the eluent, evaporate the eluent to dryness. Dissolve the residue with 30 ml of water, filter to a separator, extract with 20 ml of ethyl acetate for two times, combine the extracts, evaporate the extracts to dryness. Dissolve the residue with 1 ml of methanol as the test solution. Prepare a solution of 1 g reference drug of Fructus Forsythiae in the same manner as the reference drug solution. Carry out the method for thin layer chromatography (Appendix Ⅵ B), using silica gel G containing a mixture of 5% solution of sodium dihydrogen phosphate in sodium carboxymethylcellulose as the coating substance and a mixture of benzene-acetone-ethyl acetate-formic acid-water (20 : 25 : 30 : 3 : 3) as the mobile phase. Apply separately 2 μl of each of the two solutions to the plate, after developing and removal of the plate, dry in air. The fluorescence spots in the chromatogram obtained with the test solution correspond in position and colour to the spots with the reference solution under ultraviolet at 365 nm. Spray with a mixed solution of vanillin in sulfuric acid TS and heat to the spots distinct. The spots in the chromatogram obtained with the test solution correspond in position and colour to the spots in the chromatogram obtained with the reference drug solution.

Foreign matters Not more than 3 per cent for green Fructus Forsythiae (known as "Qingqiao"), not more than 9 per cent for brown Fructus Forsythiae (Known as "Laoqiao") (Appendix Ⅸ A).

Water Not more than 10.0 per cent (Appendix Ⅸ H, method 2).

Total ash Not more than 4.0 per cent (Appendix Ⅸ K).

Acid-insoluble ash Not more than 1.0 per cent (Appendix

Ⅸ K).

Extractives Carry out the cold maceration method for determination of extractives (Appendix Ⅹ A), using 65% ethanol as the solvent; not less than 30.0 per cent for green Fructose Forsythiae (known as "Qingqiao"); not less than 16.0 per cent for brown Fructus Forsythiae (known as "Laoqiao").

Assay Carry out the method for high performance liquid chromatography (Appendix Ⅵ D).

Chromatographic system and system suitability Use octadecylsilane bonded silica gel as the stationary phase and a mixture of acetonitrile-water (25 : 75) as the mobile phase. As detector a spectrophotometer set at 277 nm. The number of theoretic plates of the column is not less than 3000, calculated with the reference to the peak of forsythia side.

Reference solution Weigh accurately forsythia side CRS in methanol to produce a solution containing 0.2 mg per ml and mix well.

Test solution Weigh accurately 1 g of the powder in a conical flask with stopper, add accurately 15 ml of methanol and weigh. Allow to stand overnight, ultrasonicate for 25 minutes, cool and measure. Supply with methanol to the weight, mix well and filter. Measure accurately 5 ml of the successive filtrate, evaporate to nearly dryness, mix with neutral aluminum oxygen and then transfer to a column of neutral aluminium oxide (1 g, 100-120 mesh, 1-1.5 cm I. D.), elute with 80 ml of 70% ethanol solution. Collect the eluent, evaporate on water bath to dryness. Dissolve the residue with 50% ethanol solution in a 5 ml volumetric flask and add to the volume, mix well, filter with 0.45 μm microfilter.

Procedure Inject accurately 10 μl of each of the reference solution and the test solution, separately into the column, and calculate the content.
It contains not less 0.15 per cent forsythin ($C_{29}H_{36}O_{15}$), with reference to the dried basis.

Action To remove toxic *heat* to relieve swelling, and eliminate nodulation.

Indications Carbuncles, boils, lymphadenitis, mastitis, erysipelas; upper respiratory infection; febrile diseases at the early stage and at the stage with high fever, thirst, delirium and maculation; acute urinary infection with oliguria.

Usage and dosage 6-15 g.

Storage Preserve in a dry place.

Fructus Galangae (红豆蔻, Hongdoukou)

Galanga Galangal Fruit

Galanga Galangal Fruit is the fruit of *Alpinia galanga* Willd. (Fam. Zingiberaceae). The drug is collected in autumn when the fruit is turning red, removed from foreign matter, and dried in the sun.

Description Long spherical, slightly narrow in the middle, 0.7-1.2 cm long, 5-7 mm in diameter. Externally reddish-brown or dark red, somewhat shrunken, apex with yellowish-white tubular persistent calyx, base with a fruit stalk scar. Pericarp thin, easily broken. Seeds 6, oblate or triangular-polygonal, blackish-brown or reddish-brown, covered with a yellowish-white membranous aril, endosperm greyish-white. Odour, aromatic; taste, pungent.

Identification (1) Transverse section of seed: Aril consisting of 4-7 rows of cells, rounded or tangentially elongated, with slightly thickened walls. The outer part of testa consisting of 1-5 rows of unlignified and thick-walled fibres, rounded or polygonal, 13-45 μm in diameter, and 1 row of flattened, yellowish-brown or dark brown pigment cells beneath them; oil cells, 1 row, square or rectangular, 16-45 μm in diameter; pigment layer consisting of 3-5 rows of cells containing reddish-brown contents; tegmen consisting of 1 row of thick-walled palisade cells, about 65 μm long, 30 μm wide, yellowish-brown or reddish-brown, the inner walls and lateral walls adjacent to inner side strongly thickened, lumina containing a silica mass. The cells of perisperm filled with masses of starch granules and occasionally containing small prisms of calcium oxalate. The cells of endosperm containing aleurone grains and oil droplets.
(2) To 1 g of the pulverized sample, add 20 ml of ether, ultrasonicate for 10 minutes, and filter. Wash the residue with a quantity of 10 ml of ether, filter, combine the filtrates, and evaporate to dryness. Dissolve the residue with 1 ml of ethyl acetate as the test solution. Produce a solution of 1 g of Fructus Galangae reference drug in the same manner as the reference drug solution. Carry out the method for thin layer chromatography (Appendix Ⅵ B), using silica gel GF_{254} as the coating substance and a mixture of *n*-hexane-ethyl acetate (17 : 3) as the mobile phase. Apply separately to the plate 5-10 μl of each of the two solutions. After developing and removal of the plate, dry in air, and examine under ultraviolet light at 254 nm. The three spots with fluorescence in the chromatogram obtained with the test solution correspond in position and colour to the spots in the chromatogram obtained with the reference solution. Spray with a 5% solution of vanillin in sulfuric acid, and heat at 105℃ to the spots clear. The three spots in the chromatogram obtained with the test solution correspond in position and colour to the spots in the chromatogram obtained with the reference drug solution.

Assay Weigh accurately a quantity of seeds, carry out the method for determination of volatile oil (Appendix Ⅹ D). The seeds contain not less than 0.40 per cent (ml/g) of volatile oil.

Processing Eliminate foreign matter. Break to pieces before use.

Action To dispel *damp-cold*, invigorate the function of the spleen, and promote digestion.

Indications Epigastric pain accompanied by cold sensation; abdominal distension from retention of undigested food, vomiting and diarrhea; excessive alcohol drinking.

Usage and dosage 3-6 g.

Storage Preserve in a cool and dry place.

Fructus Gardeniae (栀子, Zhizi)

Cape Jasmine Fruit

Cape Jasmine Fruit is the dried ripe fruit of *Gardenia jasminoides* Ellis (Fam. Rubiaceae). The drug is collected from September to November when it turns reddish-yellow, removed from the fruit stalk and foreign matter, steamed thoroughly or treated with boiling water for a moment, then dried.

Description Prolate-ovoid or ellipsoid, 1.5-3.5 cm long, 1-

1.5 cm in diameter. The outer surface reddish-yellow or brownish-red, with 6 longitudinal winged ribs and a conspicuous longitudinal and branched vein between two ribs. Summit bearing remains of sepals, base somewhat tapering and having a remain of fruit stalk. Pericarp thin and brittle, somewhat lustrous; the inner surface relatively pale in colour, lustrous, with 2-3 raised false septa. Seeds numerous, flattened-ovoid, aggregated into a mass, deep red or reddish-yellow, with fine and dense warts on the surface. Odour, slight; taste, slightly sour and bitter.

Identification (1) Powder: Reddish-brown. Stone cells of pericarp subrectangular, fibres of pericarp long and thin, fusiform, about 10 μm in diameter, up to 110 μm long, obliquely mosaicarranged; crystal stone cells subrounded or polygonal, 17-31 μm in diameter, with thickened walls, lumina containing prisms of calcium oxalate, about 8 μm in diameter. Stone cells of testa yellow or pale brown, elongated-polygonal, rectangular or irregular in shape, 60-112 μm in diameter, up to 230 μm long, with large-pitted and thickened walls and brownish-red lumina. Clusters of calcium oxalate 19-34 μm in diameter.
(2) To 1 g of the powder add 10 ml of 50% methanol, ultrasonicate for 40 minutes, filter and use the filtrate as the test solution. Prepare a solution of 1 g of Fructus Gardeniae reference drug in the same manner as the reference drug solution. Dissolve jasminoidin CRS in ethanol to produce a solution containing 4 mg per ml as the reference solution. Carry out the method for thin layer chromatography (Appendix Ⅵ B), using silica gel G as the coating substance and a mixture of ethyl acetate-acetone-formic acid-water (5∶5∶1∶1) as the mobile phase. Apply separately to the plate 2 μl each of the three solutions. After developing and removal of the plate, dry in air. Spray with sulfuric acid solution (5→10) in ethanol, heat at 110℃ for about 10 minutes. The spots in the chromatogram obtained with the test solution correspond in position and colour to the spots in the chromatogram obtained with the reference drug solution and the reference solution.

Water Not more than 8.5 per cent (Appendix Ⅸ H, Method 1).

Total ash Not more than 6.0 per cent (Appendix Ⅸ K).

Assay Carry out the method for high performance liquid chromatography (Appendix Ⅵ D).

Chromatographic system and system suitability Use octadecylsilane bonded silica gel as the stationary phase and a mixture of acetonitrile-water (15∶85) as the mobile phase. As detector a spectrophotometer set at 238 nm. The number of theoretical plates of the column is not less than 1500, calculated with the reference to the peak of gardenoside.

Reference solution Weigh accurately a quantity of gardenoside CRS, dissolve in methanol to produce a solution containing 30 μg per ml as the reference solution.

Test solution Weigh accurately 0.1 g of the powder (through No. 4 sieve) in a stopper conical flask, add accurately 25 ml of methanol, weigh the quantity, ultrasonicate for 20 minutes, weigh again, add methanol to the initial weight, filter, transfer accurately 10 ml of the successive filtrate to a 25 ml volumetric flask, add methanol to the volume and use as the test solution.

Procedure Inject accurately 10 μl each of the reference solution and the test solution respectively into the column, and calculate the content.
It contains not less than 1.8 per cent of gardenoside ($C_{17}H_{24}O_{10}$), calculated with reference to the dried drug.

Processing *Fructus Gardeniae* Eliminate foreign matter and grind to pieces.

Fructus Gardeniae (*stir-baked*) Stir-bake the clean Fructus Gardeniae as described under the method for smiple stir-baking (Appendix Ⅱ D) until its outer part turns to yellowish-brown.

Action To reduce *fire* and ease the mind, eliminate *damp-heat*, and remove *heat-toxicity* from blood.

Indications Febrile diseases with restlessness; jaundice with dark urine; hematuria with difficult painful urination; hemoptysis and epistaxis caused by *heat* in the blood; inflammation of the eyes; boils and sores; external use for sprains and bruises.

Usage and dosage 6-9 g; for external use, appropriate quantity of unprocessed fruit to be ground into powder and applied topically after mixed with a liquid.

Storage Preserve in a ventilated and dry place.

Fructus Gardeniae Praeparatus (焦栀子, Jiaozhizi)

Charred cape Jasmine Fruit

The drug is the processed Fructus Gardeniae.

Processing Stir-bake the clean Fructus Gardeniae or break to pieces in a hot pot with middle heat as described under the method for simple stir-baking (Appendix Ⅱ D) until it becomes burnt-brown or burnt-black externally and the inner surface and seed coats yellowish-brown or dark brown, then take them out and cool.

Description Same as Fructus Gardeniae or irregular fragments, the outer surface burnt-brown or burnt-black. Pericarp thin and fragile, the inner surface brown, seed mass brown or dark brown. Odour, slight; taste, slightly sour and bitter.

Identification Carry out the method described under the determination of Fructus Gardeniae (2), have the same results.

Action To arrest bleeding by removing *heat* from blood.

Indications Hemoptysis, epistaxis, hematuria and abnormal uterine bleeding caused by *heat* in the blood.

Usage and dosage 6-9 g.

Storage Same as *Fructus Gardeniae*.

Fructus Gleditsiae Abnormalis (猪牙皂, Zhuyazao)

Chinese Honeylocust Abnormal Fruit

Chinese Honeylocust Abnormal Fruit is the dried sterile fruit of *Gleditsia sinensis* Lam. (Fam. Leguminosae). The drug is collected in autumn, removed from foreign matter, and dried.

Description Cylindrical, somewhat flattened and curved, 5-11 cm long, 0.7-1.5 cm wide. Externally purplish-brown, covered with greyish-white, waxy, frost-like powders, lustrous after rubbed away, and with fine warts and linear or reticulated fissures. Apex with a beak-shaped remain of stylopod, base with a scar of fruit stalk. Texture hard and fragile, easily broken; fracutre brownish-yellow, lax in the centre, with pale green or brownish-yellow filiform substances, occasionally bearing incomplete grown seeds.

Odour, slight and irritating; taste, sweet then pungent.

Identification (1) Powder: Brownish-yellow. Stone cells numerous, subrounded, oblong or irregular in shape, 15-53 μm in diameter. Fibres frequently in bundles, 15-25 μm in diameter, with slightly lignified walls surrounded by parenchymatous cells containing prisms of calcium oxalate and a few clusters, forming crystal fibres; fibre bundles often accompanied by subsquare, thick-walled cells. Prisms of calcium oxalate 6-15 μm long; clusters 6-14 μm in diameter. Parenchymatous cells numerous, lignified, pits and pit-canals distinct. Epidermal cells of pericarp reddish-brown, polygonal in surface view, walls relatively thickened, with granular, striated cuticle.
(2) To 1 g of the powder add 8 ml of ethanol, heat under reflux for 5 minutes, allow to cool, and filter. Evaporate 0.5 ml of the filtrate in a small porcelain dish to dryness and allow to cool, add 3 drops of acetic anhydride, stir well and add 2 drops of sulfuric acid along the wall of the dish; a reddish-purple colour is produced gradually.
(3) Boil about 1 g of the powder in 10 ml of water for 10 minutes, filter. Shake the filtrate vigorously, a persistent froth is produced over 15 minutes.

Water Not more than 14.0 per cent (Appendix Ⅸ H, method 1).

Total ash Not more than 5.0 per cent (Appendix Ⅸ K).

Processing Eliminate foreign matter, wash and dry in the sun. Break to pieces before use.

Action To dispel *phlegm*, restore consciousness, and reduce nodulation and relieve of swelling.

Indications Loss of consciousness in stroke and epilepsy; sore throat, dyspnea and cough with phlegm difficult to spit out; constipation; external use for subcutaneous pyogenic infections.

Usage and dosage 1-1.5 g, generally used in making pills or powders; for external use, appropriate quantity to be ground into powder for blowing into nostrils to induce sneezing or for topical application after mixed with liquid.

Precaution Contraindicated in pregnancy and patients with hemoptysis or hematemesis.

Storage Preserve in a dry place, protected from moth.

Fructus Hippophae (沙棘, Shaji)

Seabuckthorn Fruit

Seabuckthorn Fruit is the dried ripe fruit of *Hippophae rhamnoides* L. (Fam. Elaeagnaceae), used commonly by the Mongolia and Tibetan nationalities. The drug is collected in autumn and winter when ripe or frozen hard, removed from foreign matter, and dried or dried after steamed.

Description Subspheroidal or flattened-spheroidal, 5-8 mm in diameter, sometimes several fruit adhering together. Externally orange-yellow or brownish-red, shrunken, with a remains of style at the apex and a short fruit stalk or its scar at the base. Sarcocarp oily and soft. Seeds oblique-ovoid, about 4 mm long, 2 mm wide, externally brown, lustrous, with a longitudinal furrow in the middle; testa relatively hard, kernel milky-white, oily. Odour, slight; taste, sour and astringent.

Identification (1) Surface view of pericarp: Epidermal cells of pericarp polygonal, anticlinal walls slightly thickened. Peltate haris numerous on epidermis, consisting of more than 100 unicellular hairs, the terminal separated, each cell 80-220 μm long, about 5 μm in diameter. The scar of hair grouped with 7-8 rounded cells, with slightly thickened walls. Parenchymatous cells of sarcocarp containing numerous orange-red or orange-yellow granular contents. Bright-yellow oil droplets numerous.
(2) Measure 30 ml of the test solution as described under 'Assay' for isorhamnetin, concentrated to 5 ml, add 25 ml of water, and extract with two 20-ml quantities of ethyl acetate, combine the ethyl acetate extracts, evaporate the extracts to dryness, and dissolve the residue in 1 ml of methanol as the test solution. Dissolve isorhamnetin CRS and quercetin CRS in methanol to produce a mixture containing 1 mg of each per ml as the reference solution. Carry out the method for thin layer chromatography (Appendix Ⅵ B), using silica gel G containing 3% solution of sodium acetate as the coating substance and a mixture of methylbene-ethyl acetate-acetone-formic acid (5 : 2 : 1) as the mobile phase. Apply separately 2 μl of the test solution and the reference solution to the plate. After developing and removal of the plate, dry in air. Spray with aluminium trichloric TS. Examine under ultraviolet light at 365 nm. The fluorescent spots in the chromatogram obtained with test solution correspond in position and colour to the spots in the chromatogram obtained with the reference solution.

Foreign matter Not more than 4.0 per cent (Appendix Ⅸ A).

Water Carry out the method for determination of water (Appendix Ⅸ H, method 1), not more than 15.0 per cent.

Total ash Not more than 6.0 per cent (Appendix Ⅸ K).

Acid-insoluble ash Not more than 3.0 per cent (Appendix Ⅸ K).

Extractives Carry out the hot extraction method for determination of ethanol-soluble extractives (Appendix Ⅹ D), not less than 25.0 per cent.

Assay ***Total flavonoids*** *Reference solution* Weigh accurately 20 mg of rutin CRS, dried previously to constant weight at 120℃, in a 50 ml volumetric flask, dissolve with a quantity of 60% ethanol and heat slightly on a water bath, cool, dilute with 60% ethanol to volume, and mix well. Measure accurately 25 ml to a 50 ml volumetric flask, dilute with water to volume, and mix well to produce a solution containing 0.2 mg per ml as the reference solution.

Calibration standard Measure accurately 1.0、2.0、3.0、4.0、5.0 and 6.0 ml of the reference solution into a 25 ml volumetric flask, add 30% ethanol to 6.0 ml, add 1 ml of 5% sodium nitrite solution separately, mix well and allow to stand for 6 minutes, add 1 ml of 10% aluminium nitrate solution, mix well, allow to stand for 6 minutes. Add 10 ml of sodium hydroxide TS, dilute with 30% ethanol to volume, mix well, and allow to stand for 15 minutes. Carry out the method for ultraviolet spectrophotometry and colourimetry (Appendix Ⅴ A), using the corresponding solvent as a blank, measure the absorbance at 500 nm and plot the standard curve, using the absorbance as ordinate and the concentration as abscissa.

Procedure Weigh accurately 2 g of the coarse powder, add 30 ml of 60% ethanol, heat under reflux for 2 hours, cool and filter. Extract the residue with two 25-ml quantities of 60% ethanol heated under reflux for 1 hour respectively, filter, wash the residue with a small quantity of 60% ethanol, combine the filtrates and washing into a 100 ml volumetric flask, dilute with 60% ethanol to volume, and mix well. Measure accurately 3 ml to a 25 ml volumetric

flask, add 30% ethanol to 6.0 ml. Proceed as described under 'Calibration standard', beginning at the words "add 1 ml of 5% sodium nitrite solution", measure the absorbance. Perform a blank determination with 3 ml of test solution in the same manner except adding sodium hydroxide TS. Read out the weight of rutin (mg) in the test solution from the standard curve, and calculate the content of total flavonoids.
It contains not less than 1.5 per cent of total flavonoids, calculated as rutin ($C_{27}H_{30}O_{16}$) with reference to the dried drug.

Isorhamnetin Carry out the method for high performance liquid chromatography (Appendix Ⅵ D).

Chromatographic system and system suitability Use octadecylsilane bonded silica gel as the stationary phase and a mixture of methanol-0.4% phosphoric acid (58 : 42) as the mobile phase. As detector a spectrophotometer set at 370 nm. The number of theoretical plates of the column is not less than 3000, calculated with the reference to the peak of isorhamnetin.

Reference solution Dissolve a quantity of isorhamnetin CRS, accurately weighed, in methanol to produce a solution containing 10 μg per ml as the reference solution.

Test solution Weigh accurately 0.5 g of the powder (through No. 3 sieve) in a stopper conical flask, add 50 ml of ethanol, weigh accurately, heat under reflux for 1 hour, cool and weigh accurately again, replenish the loss of the solvent with ethanol, mix well, and filter. Measure accurately 25 ml of the successive filtrate to a stopper conical flask, add 3.5 ml of hydrochloric acid, heat on a water bath at 75℃ for 1 hour, cool immediately, transfer into a 50 ml volumetric flask, wash the conical flask with a quantity of ethanol, combine the washing to the flask, dilute with ethanol to volume, and mix well.

Procedure Inject accurately 10 μl of the reference solution and the test solution into the column respectively, and calculate the content.
It contains not less than 0.10 per cent of isorhamnetin ($C_{16}H_{12}O_7$), calculated with reference to the dried drug.

Action To relieve cough and promote expectoration, promote digestion and remove stagnancy of food, and promote blood circulation and remove blood stasis.

Indications Cough with profuse expectoration; indigestion, stagnancy of food with abdominal pain; amenorrhea due to blood stagnation; traumatic swelling and ecchymoses.

Usage and dosage 3-9 g.

Storage Preserve in a ventilated and dry place, protected from mould and moth.

Fructus Hordei Germinatus (麦芽, Maiya)

Germinated Barley

Germinated Barley is the dried germinated ripe fruit of *Hordeum vulgare* L. (Fam. Gramineae). The fruit is soaked in water at an appropriate temperature and moisture until the budlet grows up to about 5 mm long, and dried.

Description Fusiform, 8-12 mm long, 3-4 mm in diameter. Externally pale yellow, dorsally enveloped in lemma, 5-veined, with a long awn broken or fallen; ventrally subtended by palea, with a longitudinal furrow after removal of lemma and palea; the budlet and the fibrous root grown at the base of the radicle. the budlet long lanceolate-linear, about 5 mm long, the fibrous roots fine and curved. Texture hard, fracture white, starchy. Odour, slight; taste slightly sweet.

Identification To 10 g of the powder add 30 ml of dehydrated ethanol, ultrasonicate for 40 minutes, filter. To the filtrate add 1 ml of a 50% solution of potassium hydroxide, heat under reflux for 15 minutes, and cool on ice bath for 5 minutes. Move to a separator, wash the container with 20 ml of water for twice and combine the washing solution to the separator. Extract with petroleum ether (60-90℃) for 3 times, 10 ml per time. Combine the petroleum ether layer, evaporate it on a water bath at 45℃ to dryness. Dissolve the residue with 1 ml of ethyl acetate as the test solution. Prepare a solution of 10 g of Fructus Hordei Germinatus reference drug in the same manner as the reference drug solution. Carry out the method for thin layer chromatography (Appendix Ⅵ B), using silica gel G containing sodium carboxymethylcellulose as the coating substance and a mixture of benzene-chloroform (1 : 1) as the mobile phase. Apply separately 10 μl each of the two solutions to the plate. After developing and removal of the plate, dry it in air. Spray with a 15% solution of nitric acid in 50% ethanol. Heat at 100℃ to the spot distinct, examine under ultraviolet light at 365 nm. The fluorescent spot in the chromatogram obtained with the test solution corresponds in position and colour to the spot in the chromatogram obtained with the reference drug solution.

Budding rate Carry out the method for sampling of crude drugs (Appendix Ⅱ A), taking 10 g of the drug in two portions diagonally determine the amount of the budding grains and of the total grains, calculate the percentage of budding rate.
The budding rate is not less than 85%.

Processing *Fructus Hordei Germinatus* Eliminate foreign matter.

Fructus Hordei Germinatus (*stir-baked*) Stir-bake the clean Fructus Hordei Germinatus as described under the method for simple stir-baking (Appendix Ⅱ D) until its outer part becomes brown, cool and sift.

Fructus Hordei Germinatus (*charred*) Stir-bake the clean Fructus Hordei Germinatus as described under the method for simple stir-baking (Appendix Ⅱ D) until its outer part becomes dark brown.

Action *Fructus Hordei Germinatus* To invigorate the function of the spleen, and regulate the function of the stomach.

Fructus Hordei Germinatus (*stir-baked*) To promote digestion, and stop lactation.

Fructus Hordei Germinatus (*charred*) To stimulate digestion and remove the retention of undigested food.

Indications *Fructus Hordei Germinatus* Poor appitite due to deficiency of the spleen; galactostasis.

Fructus Hordei Germinatus (*stir-baked*) Indigestion; weaning a baby.

Fructurs Hordei Germinatus (*charred*) Retention of undigested food with epigastric distension and pain.

Usage and dosage 9-15 g; 60 g of Fructus Hordei Germinatus (stir-baked) for stopping lactation.

Storage Preserve in a ventilated and dry place, protected from moth.

Fructus Jujubae (大枣, Dazao)

Chinese Date

Chinese Date is the dried ripe fruit of *Ziziphus*

jujuba Mill (Fam. Rhamnaceae). The drug is collected in autumn when ripe, and dried in the sun.

Description Ellipsoidal or spheroidal, 2-3.5 cm long, 1.5-2.5 cm in diameter. Externally dark red, somewhat lustrous, irregularly wrinkled. Base dented, with a short fruit stalk. Exocarp thin, mesocarp brownish-yellow or pale brown, fleshy, soft, sugary and oily. Kernel fusiform, acute at the both ends, texture hard. Odour, slightly aromatic; taste, sweet.

Identification To 2 g of the powder add 10 ml of petroleum ether (60-90℃), macerate for 10 min and ultrasonicate for 10 min, filter and discard the petroleum ether, dry the residue in air. Add 20 ml of ether, macerate for 1 hour and ultrasonicate for 15 min, filter and concentrate to 2 ml as the test solution. Dissolve oleanolic acid CRS in ethanol to produce a solution containing 1 mg per ml as the reference solution. Carry out the method for thin layer chromatography (Appendix Ⅵ B), using silica gel G as the coating substance and a mixture of toluene-ethyl acetate-glacial acetic acid (14 : 4 : 0.5) as the mobile phase. Apply separately 10 μl each of the two solutions to the plate. After developing and removal of the plate, dry in air. Spray with a 10% solution of sulfuric acid in ethanol and heat to the spot distinct. The spot in the chromatogram obtained with the test solution corresponds in position and colour to the spot in the chromatogram obtained with the reference solution.

Total ash Not more than 2.0 per cent (Appendix Ⅸ K).

Processing Eliminate foreign matter, wash clean, dry in the sun. Cut or remove the kernel before use.

Action To tonify the spleen and replenish *qi*, nourish blood, and ease the mind.

Indications Loss of appitite, lassitude and loose stools in *deficiency* syndromes of the spleen; hysteria in women.

Usage and dosage 6-15 g.

Storage Preserve in a dry place, protected from moth.

Fructus Kochiae (地肤子, Difuzi)

Belvedere Fruit

Belvedere Fruit is the dried ripe fruit of *Kochia scoparia* (L.) Schrad. (Fam. Chenopodiaceae). The plant is collected in autumn when the fruit is ripe, dried in the sun, and the fruit is gathered, and removed from foreign matter.

Description Oblate-spheroidal, fie-pointed star shape, 1-3 mm in diameter, surrounded by a persistant perianth. Externally greyish-green or pale brown, with 5 membranous winglets, the centre of dorsal surface having a sightly prominent, pointed fruit stalk scar and 5-10 radial veins; membranous pericarp visible when the perianth stripped, translucent. Seeds flattened-ovoid, about 1 mm long, black. Odour, slight; taste, slightly bitter.

Identification (1) Powder: Brown. Epidermic cells of perianth polygonal, stomata anomocytic, parenchymatous cells containing clusters of calcium oxalate. Pericarp cells subrectangular or polygonal, thin-walled, sinuous, contining numerously small prisms of calcium oxalate. Testa cells brown, polygonal or subsquare, mostly crumpled.
(2) To 1 g of the powder add 10 ml of methanol, ultrasonicate for 30 minutes, filter and use the filtrate as the test solution. Dissolve kochioside IC CRS in methanol to produce a solution containing 0.5 mg per ml as the reference solution. Carry out the method for thin layer chromatography (Appendix Ⅵ B), using silica gel G mixed with sodium carbomethylcellulose as the coating substance and a mixture of chloroform-methanol-water (16 : 9 : 2) as the mobile phase. Apply separately 5 μl of the test solution and the reference solution to the plate. After developing and removal of the plate, dry in air. Spray with 10% sulfuric acid in ethanol and heat to the spots clear at 105℃. The purplish-red spot in the chromatogram obtained with the test solution corresponds in position and colour to the spot in the chromatogram obtained with the reference solution.

Water Not more than 14.0 per cent (Appendix Ⅸ H, Method 1).

Total ash Not more than 10.0 per cent (Appendix Ⅸ K).

Acid-insoluble ash Not more than 3.0 per cent (Appendix Ⅸ K).

Assay Carry out the method for high performance liquid chromatography (Appendix Ⅵ D).

Chromatographic system and system suitability Use octadecylsilane bonded silica gel as the stationary phase and a mixture of methanol, water and glacial acetic acid (85 : 15 : 0.2) as the mobile phase. Use an evaporative light scattering detector. The number of theoretical plates of the column is not less than 3000, calculated with the reference to the peak of kochioside Ic.

Reference solution Dissolve a quantity of kochioside Ic CRS, accurately weighed, in methanol to produce a solution containing 0.5 mg per ml as the reference solution.

Test solution Weigh accurately 0.5 g of the powder (through No. 3 sieve) in a conical flask with stopper, add 50 ml of methanol, accurately measured, and weigh accurately, allow to stand overnight, ultrasonicate for 30 minutes, cool and weigh again, make up the loss in weight with methanol to the initial weight and mix well.

Procedure Inject accurately 10 μl, 20 μl of the reference solution and 20 μl of the test solution into the column, respectively. Calculate the content with corrected logarithmic equation of external standard method.
It contains not less than 1.8 per cent of kochioside Ic ($C_{41}H_{64}O_{13}$), calculated with reference to the dried drug.

Action To remove *damp-heat*, dispel *wind*, and relieve itching.

Indications Painful and difficult urination; pruritus vulvae with leukorrhea; rubella, eczema, and cutaneous pruritus.

Usage and dosage 9-15 g; for external use, appropriate quantity to be decocted for fumigation and wash.

Storage Preserve in a ventilated and dry place, protected from moth.

Fructus Leonuri (茺蔚子, Chongweizi)

Motherwort Fruit

Motherwort Fruit is the dried ripe fruit of *Leonurus japonicus* Houtt. (Fam. Labiatae). The aerial parts of the plant is cut down in autumn when the fruit is ripe, and dried. The fruit is tapped out, and removed from foreign matter.

Description Trihedral, 2-3 mm long, about 1.5 mm wide.

Externally greyish-brown, with dark-coloured maculates, slightly broad and truncate at one end, gradually narrowed to be obtuse at the other end. Pericarp thin, cotyledons almost white, oily. Odour, slight; taste bitter.

Identification Powder: Yellowish-brown to deep brown. Cells of exocarp slightly radially elongated in transverse sectional view, variable in length, forming numerous raised ridges with yellow reticulated, unlignified cells; subpolygonal in surface view, striated-cuticulate, reticulated cells with striated-thickened walls. Sclerenchymatous cells of endocarp slightly tangentially elongated in transverse sectional view, with extremely thickened inner walls, but the outer walls relatively thin, eccentric lumina containing prisms of clacium oxalate; stellate in surface view or borders of cells indistinct, prisms obviously visible. Cells of mesocarp subpolygonal in surface view, with thin and sinuous walls. Epidermal cells of testa subsquare, with slightly thickened and sinuous walls, lumina containing pale yellowish-brown contents. Cells of endosperm containing fixed oil droplets and aleurone grains.

Total ash Not more than 10.0 per cent (Appendix Ⅸ K).

Processing *Fructus Leonuri* Eliminate foreign matter, wash and dry.

Fructus Leonuri (*stir-baked*) Stir-bake the clean Fructus Leonuri as described under the method for simple stir-baking (Appendix Ⅱ D) until it cracks.

Action To activate blood circulation and regulate menstruation, subdue hyperactivity of the liver, and clear nebula.

Indications Menstrual disorders, amenorrhea, hysmenorrhea, inflammation of the eyes, with nebula; dizziness and headache.

Usage and dosage 4.5-9 g.

Precaution Used with caution in pupil dilation.

Storage Preserve in a ventilated and dry place.

Fructus Ligustri Lucidi (女贞子, Nüzhenzi)

Glossy Privet Fruit

Glossy Privet Fruit is the dried ripe fruit of *Ligustrum lucidum* Ait. (Fam. Oleaceae). The drug is collected when ripe in winter, removed from branch and leaf, steamed or treated with boiling water for a moment, and dried, or dried directly.

Description Ovoid, elliptical or reniform, 6-8.5 mm long, 3.5-5.5 mm in diameter. Externally blackish-purple or greyish-black, shrunken and uneven, with a fruit stalk scar or persistent calyx and a short fruit stalk at the base. Texture light. Epicarp thin, mesocarp relatively lax and soft, easily stripped off, endocarp woody, yellowish-brown, with longitudinal ribs. Seed 1, reniform, purplish-black, oily. Odour, slight; taste, sweet but slightly bitter and astringent.

Identification To 0.5 g of the powder add 20 ml of methanol, heat under reflux for 30 minutes, filter, evaporate the filtrate to dryness. Dissolve the residue with a mixture of ethanol-chloroform (3 : 2) as the test solution. Dissolve oleanolic acid CRS in ethanol to produce a solution containing 1 mg per ml as the reference solution. Carry out the method for thin layer chromatography (Appendix Ⅵ B), using silica gel G as the coating substance and a mixture of cyclohexane-acetone-ethyl acetate (5 : 2 : 1) as the mobile phase. Apply separately 5 μl each of the two solutions to the plate. After developing and removal of the plate, dry in air. Spray with 10% sulfuric acid in ethanol and heat at 80℃ to the spot distinct. The spot in the chromatogram obtained with the test solution corresponds in position and colour to the spot in the chromatogram obtained with the reference solution.

Foreign matter Not more than 3 per cent (Appendix Ⅸ A).

Assay Weigh accurately 1 g of the coarse powder, add 50 ml of ethanol, heat under reflux for 30 min, cool and filter. Add same quantity of ethanol to the residue for reflux twice. Combine the filtrate and evaporate to dryness. Dissolve the residue in ethanol to a 10 ml volumetric flask, add ethanol to the volume, mix well, used as the test solution. Dissolve oleanolic acid CRS, accurately weighed, in ethanol to produce a solution containing 0.5 mg per ml as the reference solution. Carry out the method for thin layer chromatography (Appendix Ⅵ B), using silica gel G as the coating substance and a mixture of cyclohexine-acetone-ethyl acetate (5 : 2 : 1) as the mobile phase. Apply separately 2 μl of the test solution and 4 μl, 8 μl of the reference solution to the plate. After developing and removal of the plate, dry in air. Spray with 10% sulfuric acid in ethanol and heat at 100℃ to the spot distinct. Cover the plate with a piece of glass of the same size and fix the edge with tape. Carry out the method for thin layer chromatography (Appendix Ⅵ B thin layer chromatographic scanning method), scan at wavelengths of λ_S = 530 nm, and λ_R = 700 nm, measure the integrated value of the absorbance, calculate the content. It contains not less than 0.6 per cent of oleanolic acid ($C_{30}H_{48}O_3$).

Processing *Fructus Ligustri Lucidi* Eliminate foreign matter, wash and dry.

Fructus Ligustri Lucidi (*processed with wine*) Stew or steam the clean Fructus Ligustri Lucidi as described under the method for stewing with wine or steaming with wine (Appendix Ⅱ D) until the wine is entirely absorbed or steamed thoroughly.

Action To replenish the liver and kidney, improve vision and promote hair growth.

Indications Vertigo, tinnitus, aching weakness in the loins and knees, premature graying hair and impaired eyesight due to *deficient yin* of the liver and kidney.

Usage and dosage 6-12 g.

Storage Preserve in a dry place.

Fructus Liquidambaris (路路通, Lulutong)

Beautiful Sweetgum Fruit

Beautiful Sweetgum Fruit is the dried ripe infructescences of *Liquidambar formosana* Hance (Fam. Hamamelidaceae). The drug is collected in winter when the fruit is ripe, removed from foreign matter, and dried.

Description Collective fruit, composed of numerous small capsules, spheroidal, 2-3 cm in diameter, with a fruit stalk at the base. Externally greyish-brown or brown, bearing numerous acute spines and small beaked obtuse spines, 0.5-1 mm long, often broken. Small capsules acrocidal, showing small honeycomb-shaped holes. Texture light and hard, uneasily broken. Odour, slight; taste, weak.

Identification (1) Powder: Dark brown. Fibres mostly broken, 13-45 μm in diameter, the end subrounded, walls sinuous, lignified, lumen wide or narrow, usually containing yellowish-brown substance. Stone cells of pericarp subsquare, spidle-shaped, irregular or branched, 53-398 μm in diameter, with thickened walls, pit-canal branched. Epidermal cell rectangular in fracture view, 34-55 μm long; polygonal in surface view 6-17 μm in diameter, walls thickened, with pit-canal, containing yellowish-brown substance. Unicellular non-glandular hairs curved, 42-126 μm long; 34-55 μm at the base, containing yellowish-brown substance.
(2) To 2 g of the powder, add 50 ml of ethyl acetate, ultrasonicate for 30 minutes, and filter. Evaporate the filtrate to dryness, and dissolve the residue in 2 ml of ethyl acetate as the test solution. Dissolve liquidambaric acid CRS in ethyl acetate to produce a solution containing 4 mg per ml as the reference solution. Carry out the method for thin layer chromatography (Appendix Ⅵ B), using silica gel G mixed with sodium carboxymethyl cellulose as the coating substance and a mixture of petroleum ether (60-90℃)-ethyl acetate-glacial acetic acid (80 : 20 : 0.4) as the mobile phase. Apply separately 6 μl of the test solution and the reference solution to the plate. After developing and removal of the plate, dry in air. Spray with a 5% solution of vanillin in sulfuric acid and heat to the spots clear. The spots in the chromatogram obtained with test solution correspond in position and colour to the spots in the chromatogram obtained with the reference solution.

Water Carry out the method for determination of water (Appendix Ⅸ H, method 1), not more than 9.0 per cent.

Total ash Not more than 5.0 per cent (Appendix Ⅸ K).

Acid-insoluble ash Not more than 2.5 per cent (Appendix Ⅸ K).

Assay Carry out the method for high performance liquid chromatography (Appendix Ⅵ D).

Chromatographic system and system suitability Use octadecylsilane bonded silica gel as the stationary phase and a mixture of methanol-water-glacial acetic acid (83 : 13 : 0.1) as the mobile phase. Use an evaporative light scattering detector. The number of theoretical plates of the column is not less than 6000, calculated with the reference to the peak of liquidambaric acid CRS.

Reference solution Dissolve a quantity of liquidambaric acid CRS, accurately weighed, in mobile phase to produce a solution containing 0.3 mg per ml as the reference solution.

Test solution Weigh accurately 0.6 g of the powder (through No. 3 sieve) in a stopper conical flask, add 20 ml of dehydrated ethanol, and ultrasonicate for 15 minutes, cool and weigh accurately again, replenish the loss of the solvent with dehydrated ethanol, mix well, and filter. Measure accurately 10 ml of the successive filtrate and evaporate the filtrate to dryness. Dissolve the residue with dehydrated ethanol to a 2 ml volumetric flask, dilute with dehydrated ethanol to volume, and mix well.

Procedure Inject accurately 5 μl, 8 μl of the reference solution and 5 μl of the test solution, respectively, into the column, measure and calculate the content with corrected logarithmic equation of external standard method.
It contains not less than 0.15 per cent of liquidambaric acid ($C_{30}H_{46}O_3$), calculated with reference to the dried drug.

Action To dispel *wind* and remove obstruction from the *collaterals*, promote diuresis, and stimulate menstrual discharge.

Indications Arthralgia with numbness and muscular contracture; edema; lack of lactation; amenorrhea.

Usage and dosage 5-9 g.

Storage Preserve in a dry place.

Fructus Litseae
(荜澄茄, Bichengqie)

Mountain Spicy Fruit

Mountain Spicy Fruit is the dried ripe fruit of *Litsea cubeba* (Lour.) Pers. (Fam. Lauraceae). The drug is collected in autumn when ripe, removed from foreign matter, and dried in the sun.

Description Subspheroidal, 4-6 mm in diameter. Externally brown to blackish-brown, with reticulated wrinkles. Occasionally the base bearing a persistant calyx and a fine fruit stalk. A hard fragile kernel visible when removing the pericarp. Seed 1, cotyledons 2, yellowish-brown, oily. Odour, aromatic; taste, slightly pungent and slightly bitter.

Identification To 0.25 g of the powder add 10 ml of petroleum ether (60-90℃), ultrasonicate for 15 minutes, cool and filter, use the filtrate as the test solution. Prepare a solution of 3 g of Fructus Litseae reference drug in the same manner as the reference drug solution. Carry out the method for thin layer chromatography (Appendix Ⅵ B), using high performance silica gel G as the coating substance and the mixture of petroleum ether (60-90℃) and ether (3 : 2) as the mobile phase. Apply separately 5 μl of the test solution and the reference drug solution to the plate. After developing and removal of the plate, dry in air. Spray with 10% sulfuric acid in ethanol and heat at 105℃ to the spots clear. Examine under daylight and ultraviolet light at 365 nm. The spots or fluorescent spots in the chromatogram obtained with the test solution correspond in position and colour to the spots in the chromatogram obtained with the reference drug solution.

Water Not more than 10.0 per cent (Appendix Ⅸ H, Method 1).

Total ash Not more than 5.0 per cent (Appendix Ⅸ K).

Acid-insoluble ash Not more than 1.0 per cent (Appendix Ⅸ K).

Extractives Carry out the hot extraction method for determination of ethanol-soluble extractives (Appendix Ⅹ A), using ethanol as the solvent, not less than 28.0 per cent.

Action To warm the spleen and stomach to dispel *cold*, promote the flow of *qi* to relieve pain.

Indications Nausea and vomiting due to *cold* in the stomach, epigastric pain accompanied by feeling of cold; abdominal colic with cold sensition; turbid urine caused by *cold-damp*.

Usage and dosage 1.5-3 g.

Storage Preserve in a cool and dry place.

Fructus Lycii
(枸杞子, Gouqizi)

Barbary Wolfberry Fruit

Barbary Wolfberry Fruit is the dried ripe fruit of *Lycium barbarum* L. (Fam. Solanaceae). The drug is collected in summer and autumn when the fruit turns orange-red. After drying in the shade to make the

pericarp shrunken, the drug is exposed to strong sun light until the exocarp is dried and hard, and the pulp soft, removed from the fruit stalk.

Description Subfusiform or ellipsoid, 6-20 mm long, 3-10 mm in diameter. Externally scarlet or dark red, marked with a protrudent style scar at the apex, and a white fruit stalk scar at the base. Pericarp pliable and shrunken, sarcocarp fleshy, soft and viscous. Seeds 20-50, subreniform, flat and bent upwards, 1.5-1.9 mm long, 1-1.7 mm wide, pale yellow or brownish-yellow on surface. Odour, slight; taste, sweet.

Identification (1) Powder: Yellowish-orange of reddish-brown. Epidermal cells of pericarp polygonal or elongated-polygonal in surface view, straight or wave-curved, with cuticle striations. Parenchymatous cells of mesocarp subpolygonal, lumina containing orangish-red or redish-brown spherotical granules. Stone cells of testa irregular polygonal, walls thickened, wave-curved, striations distinct.
(2) To 0.5 g of the drug add 35 ml of water, heat and boil for 15 minutes, allow to cool, filter, extract the filtrate with 15 ml of ethyl acetate, evaporate the extract on water bath to about 1 ml and use as the test solution. Prepare a solution of 0.5 g of Fructus Lycii reference drug in the same manner as the reference drug solution. Carry out the method for thin layer chromatography (Appendix Ⅵ B), using silica gel G as the coating substance and a mixture of ethyl acetate-chloroform-formic acid (3 : 2 : 1) as the mobile phase. Apply separately to the plate 5 μl each of the two solutions. After developing and removal of the plate, dry in air. Examine under ultraviolet light at 365 nm, the fluorescent spot in the chromatogram obtained with the test solution corresponds in position and colour to the spot in the chromatogram obtained with the reference drug solution.

Water Carry out the method for the determination of water (Appendix Ⅸ H method 1, temperature at 80℃), not more than 13.0 per cent.

Total ash Not more than 5.0% (Appendix Ⅸ K).

Extractives Carry out the hot extraction method for determination of water-soluble extractives (Appendix Ⅹ A), not less than 55.0 per cent.

Assay ***Polysacchride of Barbary Wolfberry Fruit***
Reference solution Weigh accurately 25 mg of anhydrous glucose previously dried to constant weight at 105℃ in a 250 ml volumetric flask, add water to dissolve, dilute to volume, and mix well. (containing 0.1 mg anhydrous glucose per ml)

Calibration standard Transfer accurately 0.2, 0.4, 0.6, 0.8, 1.0 ml of the reference solution to stopper tube respectively, add water to 2.0 ml, add respectively 1 ml of 5% solution of phenol, mix well, add rapidly 5.0 ml of sulfuric acid, mix well, stand for 10 minutes, warm on a water bath at 40℃ for 15 minutes, take out and allow to cool to room temperature immediately. Carry out the method for ultraviolet spectrophotometry and colourimetry (Appendix Ⅴ A), using the corresponding solution as the blank, measure the absorbance at 490 nm, and plot the calibration curve with the absorbance as ordinate and the concentration as abscissa.

Procedure Weigh accurately 0.5 g of the coarse powder of the Barbary Wolfberry Fruit in a flask, add 100 ml of ether, heat under reflux for 1 hour, stand and allow to cool, discard the ether, evaporate the residue to remove ether on a water bath, add 100 ml of 80% ethanol, heat under reflux for 1 hour, filter immediately, wash the residue and filtering container using 30 ml of 80% hot ethanol for several times, transfer the residue and filtering paper in a flask, add 150 ml of water, heat under reflux for 2 hour. Filter immediately, wash the filtering container using a small quantity of hot water, combine the filtrate and washing solution, allow to cool, transfer to a 250 ml volumetric flask, add water to volume, mix well, transfer accurately 1 ml of solution to a stopper tube, add 1.0 ml of water, carry out the procedure as described under calibration curve preparation, beginning at the words "add respectively 1 ml of 5% solution of phenol", read and calculate the weight (mg) of Barbary Wolfberry Fruit polysaccharide in the test solution from the calibration curve.
It contains not less than 1.8 per cent of polysaccharide, calculated as glucose ($C_6H_{12}O_6$) with reference to the dried drug.

Betaine Cut the Barbary Wolfberry Fruit into pieces, weigh accurately about 2 g in a flask, add 50 ml of 80% methanol, heat under reflux for 1 hour, allow to cool, filter, wash the residue and filtering container with 30 ml of 80% methanol, combine the filtrate and the washing solution, concentrate to 10 ml, adjust PH to 1 using hydrochloric acid, add 1 g of activated carbon, heat and boil, allow to cool, filter, wash using 15 ml water for several times, combine washing solution and filtrate, add 20 ml of fresh 2.5% ammonium chromium thiocyanate solution, mix well, stand for 3 hours below 10℃. Filter with G4 sintered glass funnel, wash precipitation using a small quantity ice water, add acetone to dissolve the residue, transfer to a 5 ml volumetric flask, add acetone to volume, mix well and used as the test solution. Weigh accurately a quantity of betaine CRS, add hydrochloric acid-methanol (0.5→100) to produce a solution containing 4 mg of betaine per ml as the reference solution. Carry out the method for thin layer chromatography (Appendix Ⅵ B) using silica gel G as the coating substance and a mixture of acetone-absolute ethanol-hydrochloric acid (10 : 6 : 1) as the mobile phase. Apply separately 5 μl of the test solution and 3 and 6 μl of the reference solution to the plate, previously saturated for 30 minutes, after developing and removal of the plate, dry in air, spray with fresh modified potassium iodobismuthate TS, stand for 1-3 h to the spot distinct. Carry out the method for thin layer chromatography (Appendix Ⅵ B thin layer chromatographic scanning method), scan at the wavelength of $\lambda_S = 515$ nm, $\lambda_R = 590$ nm. Measure the integration value of the absorbance from the test solution and the reference solution respectively, and calculate the content.
It contains not less than 0.30 per cent of betaine ($C_5H_{11}NO_2$) calculated with reference to the dried drug.

Action To reinforce the liver and the kidney, replenish vital essence and improve eyesight.

Indications General debility with *deficiency* of *vital essence* with manifestations of aching of the loins and knees, dizziness and tinnitus; diabetes caused by internal *heat*; anemia; impaired vision.

Usage and dosage 6-12 g.

Storage Preserve in a cool and dry place, protected from heat, moisture and moth.

Fructus Malvae
(冬葵果, Dongkuiguo)

Cluster Mallow Fruit

Cluster Mallow Fruit is the dried ripe fruit of *Malva verticillata* L. (Fam. Malvaceae), commonly used by the Mongolia nationality. The drug is collected in summer and autumn when ripe, removed from foreign

matter, and dried in the shade.

Description Oblate-orbiculate, 4-7 mm in diameter, covered with a membranaceous persistent calyx. Persistent calyx campanulate, yellowish-green or yellowish-brown, sometimes purplish, 5-cleft at apex, segments curved inwards, 3 linear-lanceolate bractlets present outside, fruit stalk thin and short. Fruit 10-12 valved, surrounding a conical axis arranged one whorl, mericarps suboblate, 1.4-2.5 mm in diameter, externally yellowish-white or yellowish-brown, with raised annulate fine lines. Seeds reniform, brownish-yellow or blackish-brown. Odour, slight; taste, astringent.

Identification (1) Persistent calyx in surface view: Stellate hairs of lower epidermis 2-8 celled (mostly 4-8 celled) with individual cell 50-1140 μm long, about 75 μm in diameter, slightly thick-walled; sessile glandular hairs elliptical, 5-7 celled, 25-38 μm in diameter. Unicellular non-glandular hairs of upper epidermis slender, curved or straight, up to 1190 μm long, with thin or slightly thickened walls. Anomocytic stomata on both surface. Parenchymatous cells in mesophyll containing clusters of calcium oxalate, 6-25 μm in diameter, with more acute angles.
Pericarp in transverse section: Epicarp consisting of a single layer of rectangular cuticularized epidermal cells with slightly thickened walls. Mesocarp consisting of 2-3 layers of subrounded parenchymatous cells, scattered with large mucilage cells, and a single layer prism cells containing crystal cells surrounded with thickened and lignified walls. Over 10 fibre bundles in a ring sandwished between mesocarp and endocarp. Endocarp consisting of a single layer of redially elongated stone cells, palisade-like, with strongly thickened and lignified lateral and inner walls.
(2) To 2 g of the powder add 20 ml of water, shake for 15 minutes and filter. Heat the filtrate with 1 g of activated carbon on a water bath for 15 minutes and filter. To 2 ml of the filtrate add 4 drops of alkaline cupric tartrate TS, heat on a water bath for 5 minutes, a brownish-red precipitate is produced. To another 2 ml of the filtrate add 3 drops of 10% solution of α-naphthol in ethanol, mix well, add 0.5 ml of sulfuric acid along the tube wall, a purplish-red colour is shown at the junction of the two layers.

Action To remove *heat* and induce urination, and relieve edema.

Indications Enuresis, edema, thirst and urinary infection with oliguria.

Usage and dosage 3-9 g.

Storage Preserve in a cool and dry place.

Fructus Momordicae (罗汉果, Luohanguo)

Grosvenor Momordica Fruit

Grosvenor Momordica Fruit is the dried fruit of *Momordica grosvenori* Swingle (Fam. Cucurbitaceae). The drug is collected in autumn when the fruit turns from pale green to deep green, dried in the air for several days, and dried at a low temperature.

Description Ovoid, elliptical or spherical, 4.5-8.5 cm long, 3.5-6 cm in diameter. Externally brown, yellowish-brown or greenish-brown, marked with dark-coloured patches and covered with yellow fine hairs, some exhibiting 6-11 longitudinal lines. Apex with a style scar, and base with a fruit stalk scar. Texture light, fragile, pericarp thin, easily broken. Sarcocarp spongiform, pale brown. Seeds oblate, abundant, about 1.5 cm long and 1.2 cm wide, pale red to brownish-red, slightly dented between two surfaces, surrounded by radial furrows, and channelled at the edge. Odour, slight; taste, sweet.

Identification (1) Powder: Brown. Stone cells of sarcocarp mostly grouped, yellow, square or ovoid, 7-38 μm in diameter, walls thick, pit canals obvious. Stone cells of testa subrectangular or irregular, thin-waled, and with pits. Fibres long-fusiform, 16-42 μm in diametre, lumina relatively big, and pit canals obvious. Vessels scalariform and spiral, parenchymatous cells irregular, and pitted.
(2) To 2 g of the powder add 20 ml of dilute ethanol, heat under reflux for 30 minutes, filter, evaporate the filtrate to about 5 ml, extract with two portions of *n*-butanol (10 ml, 5 ml), evaporate the combined *n*-butanol extracts to dryness, dissolve the residue in 0.5 ml of methanol as the test solution. Prepare a solution of 2 g of Fructus Momordicae reference drug in the same manner as the reference drug solution. Carry out the method for thin layer chromatography (Appendix VI B), using silica gel G containing sodium carboxymethylcellulose as the coating substance and a mixture of chloroform-methanol-water (60 : 10 : 1) as the mobile phase. Apply separately 10 μl each of the above two solutions to the plate. After developing and removal of the plate, dry in air, spray with 10% sulfuric acid in ethanol solution, heat to the spot clear. The spot in the chromatogram obtained with the test solution corresponds in position and colour to the spot in the chromatogram obtained with the reference drug solution.

Water Carry out the method for determination of water (Appendix IX H, method 1), not more than 15.0 per cent.

Extractives Carry out the hot extraction method for determination of water-soluble extractives (Appendix X A), not less than 30.0 per cent.

Action To remove *heat*, moisten the lung and relax the bowels.

Indications Dry cough, sore throat and hoarseness due to *heat* in the lung; constipation due to lack of fluid in large intestine.

Usage and dosage 9-15 g.

Storage Preserve in a dry place, protected from mould and moth.

Fructus Mori (桑椹, Sangshen)

Mulberry Fruit

Mulberry Fruit is the dried fruit-spike of *Morus alba* L. (Fam. Moraceae). The drug is collected in April to June when the fruit turns red, dried in the sun, or dried after steaming briefly.

Description Collective fruit, aggregated by many small achenes, fruit-spike oblong, 1-2 cm long, 5-8 mm in diameter. Yellowish-brown, brownish-red to dark purple, with a short fruit stalk. Achene ovoid, slightly flattened, about 2 mm long and 1 mm wide, with 4 fleshy perianth-segments. Odour, slight; taste, slightly sour and sweet.

Extractives Carry out the hot extraction method for the determination of ethanolsoluble extractive (Appendix X A), using 85% ethanol as the solvent, not less than 15.0 per cent.

Action To nourish *yin* and blood, and promote the production of body fluids.

Indications Vertigo and tinnitus, palpitation, insomnia, premature graying hair and beard; thirst due to impairment of body fluids; diabetes caused by internal *heat*; constipation due to *deficiency of blood*.

Usage and dosage 9-15 g.

Storage Preserve in a ventilated and dry place, protected from moth.

Fructus Mume (乌梅, Wumei)

Smoked Plum

Smoked Plum is the almost ripe and dried fruit of *Prunus mume* (Sieb.) Sieb. et zucc. (Fam. Rosaceae). The drug is collected in summer when almost ripe, baked at a low temperature, and covered until turns to black in colour.

Description Subspheroial or flattened-spheroidal, 1.5-3 cm in diameter. Externally black or brownish-black, shrunken, with a rounded fruit stalk scar at the base. Kern hard, ellipsoidal, brownish-yellow, with dented spots on surface; seeds flattened-ovoid, pale yellow. Odour, slight; taste, extremely sour.

Identification To 5 g of the powder add 30 ml of methanol, ultrasonicate for 30 minutes, cool and filter. Evaporate the filtrate to dryness, and dissolve the residue in 20 ml of water and transfer to a separating funnel, and extract with two 20 ml-quantity of ether, combine the extract and evaporate the extract to dryness, macerate the residue with two 15 ml-quantity of petroleum ether (30-60℃) for 2 minutes, discard petroleum ether, and dissolve the residue in 2 ml of dehydrated ethanol as the test solution. Prepare a solution of 5 g of Fructus Mume reference drug in the same manner as the reference drug solution. Dissolve ursolic acid CRS in dehydrated ethanol to produce a solution of 0.5 mg per ml as the reference solution. Carry out the method for thin layer chromatography (Appendix Ⅵ B), using silica gel G as the coating substance and a mixture of cyclohexane-chloroform-ethyl acetate-formic acid (20 : 5 : 8 : 0.1) as the mobile phase. Apply separately to the plate 1-2 μl of each of the above three solutions. After developing and removal of the plate, dry in air. Spray with 10% sulfuric acid in ethanol and heat at 105℃ to the spots clear. The spots in the chromatogram obtained with test solution correspond in position and colour to the spots in the chromatogram obtained with the reference drug solution and the reference solution.

Water Not more than 16.0 per cent (Appendix Ⅸ H, method 2).

Total ash Not more than 5.0 per cent (Appendix Ⅸ K).

Acid-insoluble ash Not more than 0.50 per cent (Appendix Ⅸ K).

Extractives Carry out the hot extraction method for determination of water-soluble extractives (Appendix Ⅹ A), not less than 24.0 per cent.

Assay Weigh accurately about 4 g of the very coarse powder in a conical flask, add 100 ml of water, accurately measured, heat under reflux for 4 hours, cool, filter, discard the initial filtrate, collect the successive filtrate. To 20 ml of the successive filtrate, accurately measured, add water to 80 ml. Carry out the method for potentiometric titration (Appendix Ⅶ A), titrate with sodium hydroxide (0.1 mol/L) VS. Each ml of sodium hydroxide (0.1 mol/L) VS is equivalent to 6.404 mg of $C_6H_8O_7$.
It contains not less than 15.0 per cent of organic acids, calculated as citric acid ($C_6H_8O_7$) with reference to the dried drug.

Processing *Fructus Mume* Eliminate foreign matter, wash, and dry.

Pulp of Fructus Mume Soften the clean Fructus Mume with water or by steaming, removed from kernels.

Fructus Mume (*carbonized*) Stir-bake the clean Fructus Mume as described under the method of carbonizing by stir-baking (Appendix Ⅱ D) until pericarp and pulp bulged.

Action To arrest persistent cough, relieve diarrhea by astringing the intestines, promote the production of body fluids, and relieve colic caused by ascaris.

Indications Persistent cough in *deficiency* syndromes of the lung; chronic dysentery or diarrhea; thirst in consumptive diseases; colic and vomiting caused by ascaris, biliary ascariasis.

Usage and dosage 6-12 g.

Storage Preserve in a cool and dry place, protected from moisture.

Fructus Oryzae Germinatus (稻芽, Daoya)

Rice-grain Sprout

Rice-grain Sprout is the dried germinated ripe fruit of *Oryza sativa* L. (Fam. Graminae). The fruit is soaked in water at an appropriate temperature and moisture, then dried when the fibrous roots grow to about 1 cm long.

Description Flattened-elliptical, both apexes acuminate, 7-9 mm long, about 3 mm in diameter. Lemma yellow, bearing white pubescences and 5 veins. One apex with 2 symmetrical, white strip-shaped lodicules, 2-3 mm long, from the inner side of one lodicule spreading 1-3 curved fibrous roots, 0.5-1.2 cm long. Texture hard, fracture white and starchy. Odour, slight; taste, weak.

Budding rate Carry out the method for Sampling of crude drugs (Appendix Ⅱ A), taking two samples from 10 g of the drug diagonally to count the germinative grains and the total grains then budding rate. The budding rate is not less than 85 per cent.

Processing *Fructus Oryzae Germinatus* Eliminate foreign matter.

Fructus Oryzae Germinatus (*stir-baked*) Stir-bake the clean *Fructus Oryzae Germinatus* as described under the method for simple stir-baking (Appendix Ⅱ D) until a dark yellow colour is produced.

Fructus Oryzae Germinatus (*charred*) Stir-bake the clean *Fructus Oryzae Germinatus* as described under the method for simple stir-baking (Appendix Ⅱ D) until it becomes charred yellow colour.

Action To promote digestion, invigorate the function of the spleen to improve appetite.

Fructus Oryzae Germinatus (*stir-baked*) To promote digestion.

Fructus Oryzae Germinatus (*charred*) To remove the ratained food.

Indications Retention of undigested food with abdominal distension and foul breath; poor appitite due to deficiency of

the spleen and the stomach.

Fructus Oryzae Germinatus (stir-baked) loss of appitite.

Fructus Oryzae Germinatus (charred) Retention of undigested food.

Usage and dosage 9-15 g.

Storage Preserve in a ventilated and dry place, protected from moth.

Fructus Perillae (紫苏子, Zisuzi)

Perilla Fruit

Perilla Fruit is the dried ripe fruit of *Perilla frutescens* (L.) Britt. (Fam. Labiatae). The drug is collected in autumn when ripe, removed from foreign matter, and dried in the sun.

Description Ovoid or subspherical, about 1.5 mm in diameter. Externally greyish-brown, with dark purple and slightly protuberant reticulate striations, base slightly acute, with greyish-white and pointed fruit stalk scar. Pericarp thin and fragile, easily broken. Seeds yellowish-white, testa membranous, cotyledons 2, whitish and oily. Odour, aromatic by pressing; taste, slightly pungent.

Processing *Fructus Perillae* Eliminate foreign matter, wash clean, and dry.

Fructus Perillae (stir-baked) Stir-bake the clean Fructus Perillae as described under the method for simple stir-baking (Appendix Ⅱ D) until the drug burst.

Action To relieve dyspnea and cough, eliminate phlegm, and relax bowels.

Indications Cough and dyspnea due to accumulation of phlegm; constipation due to lack of intestinal fluid.

Usage and dosage 3-9 g.

Storage Preserve in a ventilated and dry place, protected from moth.

Fructus Phyllanthi (余甘子, Yuganzi)

Emblic Leafflower Fruit

Emblic Leafflower Fruit is the dried ripe fruit of *Phyllanthus emblica* L. (Fam. Euphorbiaceae), used commonly by Tibetan nationality. The drug is collected in winter to next spring when ripe, removed from foreign matter, and dried.

Description Spheroidal or flattened-spheroidal, 1.2-2 cm in diameter. Externally brown to dark green, with pale yellow granular prominences, wrinkles and 6 indistinct ribs. Fruit stalk about 1 mm long. Exocarp 1-4 mm thick. Texture hard and fragile. Endocarp yellowish-white, hard kernel-like, showing 6 indistinct ribs on the surface and several vascular bundles at the upper part of dorsal suture, cracking to 6 valves after dried. Seeds 6, subtriquetrous, brown. Odour, slight; taste, sour, astringent and then sweet.

Identification To 0.5 g of the powder, add 25 ml of methanol, ultrasonicate for 30 minutes, filter, and use the filtrate as the test solution. Dissolve gallic acid CRS in methanol to produce a solution containing 1 mg per ml as the reference solution. Carry out the method for thin layer chromatography (Appendix Ⅵ B), using polyamide as the coating substance and a mixture of ethyl acetate and formic acid (3 : 1) as the mobile phase. Apply separately 2 μl of each of two solutions spotted as streak-shaped to the plate. After developing and removal of the plate, dry in air, spray with a 2% solution of ferric chloride TS in ethanol. The streaks in the chromatogram obtained with the test solution correspond in position and colour to the streaks in the chromatogram obtained with the reference solution.

Water Carry out the method as described under the determination of water (Appendix Ⅸ H, method 1), not more than 13.0 per cent.

Total ash not more than 5.0 per cent (Appendix Ⅸ K).

Acid-insoluble ash not more than 1.5 per cent (Appendix Ⅸ K).

Extractives Carry out the cold maceration method as described under the determination of water-soluble extractives (Appendix Ⅹ A), not less than 30.0 per cent.

Action To remove *heat* from blood, promote digestion and invigorate the spleen function, and promote the production of body fluids and relieve cough.

Indications Symptoms of blood stasis due to heat in the blood; maldigestion dyspepsia, abdominal distension; cough, sore throat, and dry.

Usage and dosage 3-9 g, usually made into pills or powder.

Storage Preserve in a dry and cool place.

Fructus Piperis (胡椒, Hujiao)

Pepper Fruit

Pepper Fruit is the dried and nearly ripe or ripe fruit of *Piper nigrum* L. (Fam. Piperaceae). The drug is collected in later autumn to next spring when the fruit is dark green, dried in the sun, known as "Black Pepper"; the drug is collected when the fruit turns to red, moistened for several days, removed from sarcocarp, dried in the sun, known as "White Pepper".

Description *Black Pepper* Spheroidal, 3.5-5 mm in diameter. Externally blackish-brown, with raised reticulated wrinkles, bearing a fine remains of style at the apex and a scar of fruit axis at the base. Texture hard, exocarp can be stripped, endocarp greyish-white or pale yellow. Fracture yellowish-white, starchy, possessing a small space at the centre. Odour, aromatic; taste, pungent.

White Pepper Externally greyish-white or pale yellowish-white, smooth, with numerous pale-coloured linear striations between apex and base.

Identification (1) Powder of Black Pepper: Dark grey. Stone cells of exocarp subsquare, rectangular or irregular, 19-66 μm in diameter, walls relatively thickened. Stone cells of endocarp subpolygonal in surface view, 20-30 μm in diameter, square in lateral view, one side of walls thin. Cells of testa brown, polygonal, with beaded walls. Oil cells relatively less, subrounded, 51-75 μm in diameter. Starch granules small, often grouped.

(2) To a small quantity of the powder add 1 drop of suphuric acid, a red colour is produced, turning to a reddish-brown

colour gradually and then to a dark brown colour.
(3) To 0.5 g of the powder add 5 ml of dehydrated ethanol, ultrasonicate for 30 minutes, and filter. Use the filtrate as the test solution. Dissolve piperine CRS in dehydrated ethanol in an amber volumetric flask to produce a solution containing 4 mg per ml as the reference solution. Carry out the method for thin layer chromatography (Appendix Ⅵ B), using silica gel G as the coating substance and a mixture of benzene-ethyl acetate-acetone (7 : 2 : 1) as the mobile phase. Apply separately 2 μl each of the two solutions to the plate. After developing and removal of the plate, dry in air. Spray with 10% solution of sulfuric acid in ethanol and heat under a current of hot air to the spot distinct. The spot in the chromatogram obtained with the test solution corresponds in position and colour to the spot in the chromatogram obtained with the reference solution.

Assay Carry out the method for high performance liquid chromatography (Appendix Ⅵ D).

Chromatographic system and system suitability Use octadecylsilane bonded silica gel as the stationary phase and a mixture of methanol-water (77 : 23) as the mobile phase. As detector a spectrophotometer set at 343 nm. The number of theoretical plates of the column is not less than 1500, calculated with the reference to the peak of piperine.

Internal standard solution Dissolve a quantity of *p*-dimethylaminobenzaldehyde, accurately weighed, in dehydrated ethanol in an amber volumetric flask to produce a solution containing 0.5 mg per ml as the internal standard solution.

Procedure Dissolve a quantity of piperine CRS, accurately weighed, in dehydrated ethanol in an amber volumetric flask to produce a solution containing 1 mg per ml. Measure accurately 2 ml of each of the above solution and the internal standard solution to a 25 ml amber volumetric flask, dilute with dehydrated ethanol to volume, and mix well. Inject 10 μl into the column, calculate the correction factor. Weigh accurately 0.25 g of the drug powder in a 100 ml amber volumetric flask, add 80 ml of dehydrated ethanol, and ultrasonicate (power, 150 W; frequency, 12 kHz) for at least 30 minutes, allow to stand to room temperature, dilute with dehydrated ethanol to volume, shake thoroughly and filter. Measure accurately 20 ml of the filtrate and 2 ml of the internal stardand solution in an amber volumetric flask and dilute with dehydrated ethanol to volume and mix well. Inject 10 μl into the column, measure the peak area and calculate the content with corrected internal standard method.
It contains not less than 3.0 per cent of piperine ($C_{17}H_{19}O_3N$).

Processing Eliminate foreign matter, break to the fine powder before use.

Action To dispel *cold* from the stomach, subdue upward *qi* flow and to eliminate *phlegm*.

Indications Vomiting, abdominal pain, diarrhea and loss of appitite due to *cold* in the stomach; inappetence, epilepsy with profuse *phlegm*.

Usage and dosage 0.6-1.5 g, ground into powder for oral administration; appropriate quantity for external use.

Storage Preserve in well closed containers, stored in a cool and dry place.

Fructus Piperis Longi
(荜茇, Bibo)

Long Pepper

Long Pepper is the dried and nearly ripe or ripe fruit-spike of *Piper longum* L. (Fam. Pipe-raceae). The drug is collected when the spike turns from green to black, removed from foreign matter, and dried in the sun.

Description Cylindrical, slightly curved, aggregated by numerous small berries, 1.5-3.5 cm long, 3-5 mm in diameter. Externally blackish-brown or brown, with obliquely and regularly arranged protrudings, base bearing a remains of peduncle or sometimes fallen away. Texture hard and easily broken, fracture irregular and granular. Small berries spheroidal, about 1 mm in diameter. Odour, characteristically aromatic; taste, pungent.

Identification (1) Powder: Greyish-brown. Stone cells subrounded, long-ovoid or polygonal, 25-61 μm in diameter, up to 170 μm long, walls relatively thickened, some distinctly striated. Oil cells subrounded, 25-66 μm in diameter. Cells of testa reddish-brown, long-polygonal, walls beaded. Starch granules small, usually aggregated.
(2) To a small quantity of the powder add 1 drop of sulphuric acid, a bright red colour is produced, gradually becomes reddish-brown and brown at last.
(3) To 0.8 g of the powder add 5 ml of dehydrated ethanol, ultrasonicate for 30 minutes, and filter. Use the filtrate as the test solution. Dissolve piperine CRS in dehydrated ethanol in an amber volumetric flask to produce a solution containing 4 mg per ml as the reference solution. Carry out the method for thin layer chromatography (Appendix Ⅵ B), using silica gel G as the coating substance and a mixture of benzene-ethyl acetate-acetone (7 : 2 : 1) as the mobile phase. Apply separately 2 μl each of the two solutions to the plate. After developing and removal of the plate, dry in air. Examine under ultraviolet light at 365 nm, the fluorescent spot in the chromatogram obtained with the test solution corresponds in position and colour to the spot in the chromatogram obtained with the reference solution. Spray with 10% solution of sulphuric acid in ethanol and heat under a current of hot air to the spot distinct. The yellowish-brown spot in the chromatogram obtained with the test solution corresponds in position and colour to the spot in the chromatogram obtained with the reference solution.

Foreign matter Not more than 3 per cent (Appendix Ⅸ A).

Water Carry out the method for the determination of water (Appendix Ⅸ H, method 2), not more than 11.0 per cent.

Total ash Not more than 5.0 per cent (Appendix Ⅸ K).

Assay Carry out the method for high performance liquid chromatography (Appendix Ⅵ D).

Chromatographic system and system suitability Use octadecylsilane bonded silica gel as the stationary phase and a mixture of methanol-water (77 : 23) as the mobile phase. As detector a spectrophotometer set at 343 nm. The number of theoretical plates of the column is not less than 1500, calculated with the reference to the peak of piperine.

Internal standard solution Dissolve a quantity of *p*-dimethylaminobenzaldehyde, accurately weighed, in dehydrated ethanol in an amber volumetric flask to produce a solution containing 0.5 mg per ml as the internal standard solution.

Procedure Dissolve a quantity of piperine CRS, accurately weighed, in dehydrated ethanol in an amber volumetric flask to produce a solution containing 1 mg per ml. Measure accurately 2 ml of each of the above solutions and the internal standard solution to a 25 ml amber volumetric flask, dilute with dehydrated ethanol to volume, and mix well. Inject 10 μl into the column, calculate the correction factor. Weigh accurately 0.25 g of the drug powder in a 100 ml amber volumetric flask, add 80 ml of dehydrated ethanol, and

ultrasonicate (power, 250 W; frequency, 20 kHz) for at least 30 minutes, allow to stand to room temperature, dilute with dehydrated ethanol to volume, shake thoroughly and filter. Measure accurately 20 ml of the filtrate and 2 ml of the internal stardand solution in an amber volumetric flask and dilute with dehydrated ethanol to volume and mix well. Inject 10 μl into the column, measure the peak area and calculate the content with corrected internal standard method.

It contains not less than 2.5 per cent of piperine ($C_{17}H_{19}O_3N$) calculated with reference to the dried drug.

Processing Eliminate foreign matter. Break to pieces before use.

Action To dispel *cold* from the spleen and the stomach, subdue upward *qi* flow and relieve pain.

Indications Epigastric pain, vomiting and diarrhea caused by *cold*, migraine; external use for toothache.

Usage and dosage 1.5-3 g; for external use, appropriate quantity to be ground into powder and filled in the cavity of dental caries.

Storage Preserve in a cool and dry place, protected from moth.

Fructus Podophylli (小叶莲, Xiaoyelian)

Common Sinopodophyllum Fruit

Common Sinopodophyllum Fruit is the dried ripe fruit of *Podophyllum hexandrum* Royle Ying (Fam. Berberidaceae), used commonly by the Tibetan nationality. The drug is collected in autumn when ripe, removed from foreign metter, and dried.

Description Ellipsoidal or subspheroidal, mostly flattened, 3-5.5 cm long, 2-4 cm in diameter. Externally purplish-red or purplish-brown, shrunken, seeds sometimes visible. Apex slightly acute, fruit stalk yellowish-brown, mostly fallen. Sarcocarp adhering to pericarp, forming a thin slice, easily broken, containing numerous seeds. Seeds subovoid, about 4 mm long, externally reddish-purple, with fine furrows and a small protrusion at one end. Texture hard; kernel white, oily. Odour, slight; taste, sour, sweet and astringent; seeds, bitter.

Action To regulate menstruation and promote the circulation of blood.

Indications Amenorrhea due to blood stasis, difficult labour, retention of dead fetus, retention of placenta.

Usage and dosage 3-9 g; usually made into pills or powder.

Storage Preserve in a dry place.

Fructus Polygoni Orientalis (水红花子, Shuihonghuazi)

Prince's-feather Fruit

Prince's-feather Fruit is the dried ripe fruit of *Polygonum orientale* L. (Fam. Polygonaceae). The fruit spike is collected in autumn when ripe, dried in the sun. The fruit is gathered, and removed from foreign matter.

Description Oblate, 2-3.5 mm in diameter, 1-1.5 mm thick. Externally brownish-black or reddish-brown, lustrous, somewhat dented on both surfaces, and slightly longitudinally raised in the middle, with a protrudent remains of style at the apex and a pale brown, slightly protrudent scar of fruit stalk at the base, some with the remains of membranous perianth. Texture hard. Odour, slight; taste, weak.

Total ash Not more than 5.0 per cent (Appendix Ⅸ K).

Action To reduce masses by dissipating blood stasis, and relieve pain by removing stagnancy of food.

Indications Masses in the abdomen, goitre with swelling pain, epigastric distending pain due to indigestion.

Usage and dosage 15-30 g; for external use, appropriate quantity to be made into plasters for topical application.

Storage Preserve in a dry place.

Fructus Psoraleae (补骨脂, Buguzhi)

Malaytea Scurfpea Fruit

Malaytea Scurfpea Fruit is the dried ripe fruit of *Psoralea corylifolia* L. (Fam. Leguminosae). The infructescence is collected in autumn when the fruit is ripe, dried in the sun, and the fruit is gathered, removed from foreign matter.

Description Reniform, slightly flattened, 3-5 mm long, 2-4 mm wide, about 1.5 mm thick. Externally black, blackish-brown or greyish-brown, with finely reticulate wrinkles. Apex obtuse-rounded, with a small prominence and the depressed end showing a scar of fruit stalk. Texture hard. Pericarp thin, uneasily stripped from seed; seed 1, cotyledons 2, yellowish-white, oily. Odour, aromatic; taste, pungent and slightly bitter.

Identification To 0.5 g of the powder add 20 ml of ethyl acetate, ultrasonicate for 15 minutes, filter. Evaporate the filtrate to dryness, dissolve the residue in 1 ml of ethyl acetate as the test solution. Dissolve psoralen CRS and isopsoralen CRS in ethyl acetate to produce a solution containing 2 mg of each per ml as the reference solution. Carry out the method for thin layer chromatography (Appendix Ⅵ B), using silica gel G as the coating substance and a mixture of *n*-hexane-ethyl acetate (4 : 1) as the mobile phase. Apply separately 2-4 μl each of the two solutions to the plate. After developing and removal of the plate, dry in air, spray with a 10% solution of potassium hydroxide in methanol; and examine under ultraviolet light at 365 nm. The two bluish-white fluorescent spots in the chromatogram obtained with the test solution correspond in position and colour to the spots in the chromatogram obtained with the reference solution.

Foreign matter Not more than 5 per cent (Appendix Ⅸ A).

Water Not more than 9.0 per cent (Appendix Ⅸ H, method 1).

Total ash Not more than 8.0 per cent (Appendix Ⅸ K).

Acid-insoluble ash Not more than 2.0 per cent (Appendix Ⅸ K).

Assay Carry out the method for high performance liquid chromatography (Appendix Ⅵ D).

Chromatographic system and system suitability Use octadecylsilane bonded silica gel as the stationary phase and a

mixture of methanol and water (55 : 45) as the mobile phase. As detector a spectrophotometer set at 246 nm. The number of theoretical plates of the column is not less than 3000, calculated with the reference to the peak of psoralen.

Reference solution Dissolve a quantity of psoralen CRS and isopsoralen CRS, accurately weighed, in methanol to produce a solution containing 20 μg per ml, respectively.

Test solution Weigh accurately 0.5 g of the powder (through No. 3 sieve) into a Soxhlet's extractor, add a quantity of methanol and heat under reflux for 2 hours, cool and transfer into a 100 ml volumetric flask, dilute with methanol to volume and mix well.

Procedure Inject accurately 5-10 μl of the reference solution and the test solution into the column, and calculate the content.

It contains not less than 0.70 per cent of the total content of psoralen ($C_{11}H_6O_3$) and isopsoralen ($C_{11}H_6O_3$), calculated with reference to the dried drug.

Processing *Fructus Psoraleae* Eliminate foreign matter.

Fructus Psoraleae (*processed with salt*) Stir-bake the clean Fructus Psoraleae as described under the method for stir-baking with salt-water (Appendix Ⅱ D) until slightly inflated.

Action To invigorate the function of the kidney, alleviate asthma, and relieve diarrhea.

Indications Impotence, seminal emission; enuresis, frequent urination; aching of the loins and knees with cold sensation; asthma in *deficiency* syndromes of the kidney; diarrhea occurring before dawn daily. External use for vitiligo and alopecia areata.

Usage and dosage 6-9 g; for external use, tincture of Fructus Psoraleae of 20%-30% in concentration to be applied topically.

Storage Preserve in a dry place.

Fructus Quisqualis (使君子, Shijunzi)

Rangooncreeper Fruit

Rangooncreeper Fruit is the dried ripe fruit of *Quisqualis indica* L. (Fam. Combretaceae). The fruit is collected in autumn when the pericarp turns purplish-black, removed from foreign matter, and dried.

Description Ellipsoidal or ovoid, 5-ribbed longitudinally, occasionally 4 to 9-ribbed, 2.5-4 cm long, about 2 cm in diameter. Externally blackish-brown to purplish-black, smooth, somewhat lustrous. Apex narrowly acute, base obtuserounded, with a marked rounded scar of fruit stalk. Texture hard. Transverse section frequently five-pointed starshaped, relatively thick at the ribs, with a subrounded hollowed centre. Seeds long-ellipsoidal or fusiform, about 2 cm long, 1 cm in diameter; externally brown or blackish-brown, with many longitudinal wrinkles; testa thin, easily stripped; cotyledons 2, yellowish-white, oily, fracture fissured. Odour, slightly aromatic; taste, slightly sweet.

Processing *Fructus Quisqualis* Eliminate foreign matter. Break to pieces before use.

Semen Quisqualis Remove the pericarp of the clean Fructus Quisqualis.

Semen Quisqualis (*stir-baked*) Stir-bake the clean Semen Quisqualis as described under the method for simple stir-baking (Appendix Ⅱ D) to scented.

Action To kill worms and promote digestion.

Indications Ascariasis, oxyuriasis, abdominal pain or infantile malnutrition due to intestinal parasitosis.

Usage and dosage 9-12 g crushed to pieces for making decoction; 6-9 g of the seeds mostly used in making pills or powder together with other herbs or taken alone in 1-2 divided doses.

Precaution Incompatible with strong tea.

Storage Preserve in a ventilated and dry place, protected from mould and moth.

Fructus Rosae Laevigatae (金樱子, Jinyingzi)

Cherokee Rose Fruit

Cherokee Rose Fruit is the dried ripe fruit of *Rosa laevigata* Michx. (Fam. Rosaceae). The drug is collected in October and November when the fruit turns red, dried, and removed from bristle.

Description Pseudo carp developed from receptacle, obovoid, 2-3.5 cm long, 1-2 cm in diameter. Externally reddish-yellow or reddish-brown with raised brown small scars of the fallen bristles. A dish like calyx remained at the apex, with a style base in the middle and the lower part gradually tapered. Texture hard. On cutting, the walls of receptacle 1-2 mm thick, with numerous small achenes inside, the inner surface of receptacle and achenes with yellowish tomenta. Odour, slight; taste, sweetish and slightly astringent.

Identification (1) Transverse section of receptacle wall: Outer epidermal cells subsquare or slightly radially elongated, with thickened and cutinized outer and lateral walls; cells of bristle scars on epidermis in longitudinal section radially elongated. Parenchymatous cells with slightly thickened and distinctly pitted walls, containing oil droplets and orange-yellow contents, some containing prisms and clusters of calcium oxalate; fibre bundles scattered in the outer part of cortex; collateral vascular bundles mostly situated in the central part of cortex, with fibre bundles outside the phloem, vessels scattered or radially arranged. Inner epidermal cells rectangular, with thickened and cutinized inner walls; non-glandular hairs or their remains lignified.

Powder of receptacle: Pale flesh-coloured. Non-glandular hairs of 1 or more cells, 505-1836 μm long, 16-31 μm in diameter, with lignified or slightly lignified walls and slightly curved and oblique striation on the surface, lumina containing yellowish-brown contents. Epidermal cells polygonal, thick-walled and containing yellowish-brown contents. Prisms of calcium oxalate abundant, rectangular or irregular, 16-39 μm in diameter; clusters sometimes visible, 27-66 μm in diameter Spiral, reticulate, annular and bordered pitted vessels 8-20 μm in diameter. parenchymatous cells polygonal, lignified, pitted and containing yellowish-brown contents. Fibres fusiform or stripy, yellow, up to 1071 μm long, 16-20 μm in diameter, with lignified walls. Masses of resin irregular in shape, yellowish-brown and translucent.

(2) Heat 5 g of the powder in 50 ml of water on a water bath at 60℃ for 15 minutes and filter immediately. To 1 ml of the filtrate add 4-5 drops of alkaline cupric tartrate TS, heat on a water bath for 5 minutes; a reddish-brown precipitate is produced. To another 1 ml of the filtrate, add 1-2 drops of 1% ferric chloride solution; a dark purple colour is produced.

(3) Shake vigorously 2 ml of the above filtrate in a stopper tube for 1 minute, a large amount of honeycomb-like foam is produced, which persists for 10 minutes.

Assay *Reference preparation* Weigh accurately 60 mg of anhydrous glucose previously dried to constant weight at 105℃ in a 100 ml volumetric flask, add water to dissolve and dilute to volume.

Calibration standard Transfer accurately 0.5, 1.0, 1.5, 2.0, 2.5 ml of the reference solution to 50 ml volumetric flask respectively, add water to the volume, mix well. Transfer accurately 2 ml each of the above solutions to stopper tubes, add respectively 1 ml of 4% solution of phenol, mix well, add rapidly 7.0 ml of sulfuric acid, mix well, warm on a water bath at 40℃ for 30 minutes, take out and keep in an ice bath for 5 minutes. Carry out the method for ultraviolet spectrophotometry and colourimetry (Appendix Ⅴ A), using the corresponding solution as the blank, measure the absorbance at 490 nm, and plot the calibration curve with the absorbance as ordinate and the concentration as abscissa.

Procedure Weigh accurately 0.5 g of the coarse powder of the pulp of Fructus Rosae Laevigatae in a conical flask, add accurately 50 ml of water, weigh again, allow to stand for 1 hour, heat under reflux for 1 hour, allow to cool, weigh again, add water to the initial weight, mix well, filter, transfer accurately 1 ml of the successive filtrate to a 100 ml volumetric flask, add water to the volume, shake well, transfer accurately 25 ml of the solution to a 50 ml volumetric flask, add water to the volume, mix well, transfer accurately 2 ml of it to a stopper tube. Measure the absorbance, as described under calibration standard, beginning at the words "add respectively 1 ml of 4% solution of phenol", read and calculate the weight (μg) of Fructus Rosae Laevigatae polysaccharide in the test solution from the calibration curve.

It contains not less than 25.0 per cent of polysaccharide, calculated as anhydrous glucose ($C_6H_{12}O_6$) with reference to the dried drug.

Processing *Fructus Rosae Laevigatae* Eliminate froeign matter, wash and dry.

Pulp of Fructus Rosae Laevigatae Soak the clean Fructus Rosae Laevigatae briefly, soften thoroughly, halve longitudinally, remove hair and achenes and then dry.

Carry out the method of Assay, it contains not less than 25.0% of polysaccharide, calculated as glucose ($C_6H_{12}O_6$).

Action To arrest seminal emission, to restrain polyuria, and check diarrhea.

Indications Nocturnal emission, spermatorrhea; enuresis, frequent urination; abnormal uterine bleeding; excessive leukorrhea; protracted diarrhea; chronic dysentery.

Usage and dosage 6-12 g.

Storage Preserve in a ventilated and dry place, protected from moth.

Fructus Rubi (覆盆子, Fupenzi)

Palmleaf Raspberry Fruit

Palmleaf Raspberry Fruit is the dried fruit of *Rubus chingii* Hu (Fam. Rosaceae). The drug is collected in early summer when it turns from green to greenish-yellow, removed from fruit stalk and leaf, treated with boiling water for a moment or steamed briefly, and dried.

Description Aggregate fruit consisting of numerous small drupes, conical or flattened-conical, 0.6-1.3 cm high, 0.5-1.2 cm in diameter. Externally yellowish-green or pale brown, apex obtuse, base depressed in the centre. Persistent calyx brown, with a scar of fruit stalk. Drupelets easily fallen, lunate, dorsal surface densely covered with greyish-wihte pubescences, reticulate striations distinct on both sides, ventral surface with prominent ridges. Texture hard and light. Odour, slight; taste, slightly sour and astringent.

Identification Powder: Brownish-yellow. Non-glandular hairs unicellular, 60-450 μm long, 12-20 μm in diameter, walls strongly thickened, lignified, most with double spiral striations, the upper part of some hairs easily fallen off, and the remains embeded in epidermis, round-polygonal or oblong in surface view, up to about 23 μm in diameter, lumina branched, similar to stone cells in shape. Clusters of calcium oxalate frequently visible, 18-50 μm in diameter. Fibres of pericarp yellow, crisscross or obliquely alternate.

Action To benefit the kidney, and arrest seminal emission and excessive urination.

Indications Enuresis, frequent urination, impotence, premature ejaculation, seminal emission and spermatorrhea in *deficiency* syndrome of the kidney.

Usage and dosage 6-12 g.

Storage Preserve in a dry place.

Fructus Schisandrae Chinensis (五味子, Wuweizi)

Chinese Magnoliavine Fruit

Chinese Magnoliavine Fruit is the dried ripe fruit of *Schisandra chinensis* (Turcz.) Barll. (Fam. Magnoliaceae). The drug is known as "Bei Wuweizi" (Northern Magnoliavine Fruit). The drug is collected in autumn when ripe, dried in the sun or after steamed, removed from stalk and foreign matter.

Description Irregularly spheroidal or compressed-spheroidal, 5-8 mm in diameter. Externally red, purplish-red or dull red, shrunken, oily, with soft pulp, sometimes externally blackish-red or covered with "white frost". Seeds 1-2, reniform, externally brownish-yellow, lustrous, testa thin and fragile. Odour of pulp, slight; taste, sour. Odour of seeds, aromatic on crushing; taste pungent and slightly bitter.

Identification (1) Transverse section: Pericarp consisting of 1 layer of square or rectangular epidermal cells, walls relatively thickened, covered with cuticle, oil cells scattered; mesocarp consisting of 10 or more layers of parenchymatous cells containing starch granules, scattered with small collateral vascular bundles; endocarp consisting of 1 layer of small square parenchymatous cells. The most outer layer of testa consisting of radially elongated stone cells, thick-walled, with fine and close pits and pit canals; beneath showing several layers of stone cells, subrounded, triangular or polygonal with larger pits; underneath the stone cell layers occurring a few layers of parenchymatous cells, raphe having vascular bundles; oil cell layer consisting of 1 layer of rectangular oil cells containing yellowish-brown volatile oil, with 3-5 layers of small cells lying below; inner epidermal cells of testa small, slightly thick-walled;

endosperm cells containing oil droplets and aleurone grains.
Powder: Dark purple, Stone cells of epidermis of testa polygonal or elongated-polygonal in surface view, 18-50 μm in diameter, walls thickened with very fine and close pit canals, lumina containing dark brown contents. Stone cells of the inner layers of testa polygonal, subrounded or irregular, up to 83 μm in diameter, walls slightly thickened, with relatively large pits. Epidermal cells of pericarp polygonal in surface view, anticlinal walls slightly beaded, with cuticle striations, scattered with oil cells. Cells of mesocarp shrivelled, containing dark brown contents and starch granules.
(2) To 1 g of the powder add 20 ml of chloroform, heat under reflux on a water bath for 30 minutes, filter, evaporate the filtrate to dryness. Dissolve the residue in 1 ml of chloroform as the test solution. Produce a solution of Fructus Schisandrae Chinensis reference drug in the same manner as the reference drug solution. Dissolve deoxyschizandrin CRS in chloroform to produce a solution containing 1 mg per ml as the reference solution. Carry out the method for thin layer chromatography (Appendix Ⅵ B), using silica gel GF_{254} as the coating substance and the upper layer of petroleum ether (30-60℃)-ethyl formate-formic acid (15 : 5 : 1) as the mobile phase. Apply separately to the plate 2 μl each of the three solutions. After developing and removal of the plate, dry in air, examine under ultraviolet light at 254 nm. The spots in the chromatogram obtained with the test solution correspond in position and colour to the spots in the chromatogram obtained with the reference drug solution and the reference solution.

Foreign matter Not more than 1 per cent (Appendix Ⅸ A).

Assay Carry out the method for high performance liquid chromatography (Appendix Ⅵ D).

Chromatographic system and system suitability Use octadecylsilane bonded silica gel as the stationary phase and a mixture of methanol-water (13 : 7) as the mobile phase. As detector a spectrophotometer set at 250 nm. The number of theoretical plates of the column is not less than 2000, calculated with the reference to the peak of schizandrol A.

Reference solution Weigh accurately schisandrin CRS 15 mg in a 50 ml volumetric flask, dissolve and dilute with methanol to volume, mix well and use as the reference solution (containing 0.3 mg of schisandrin per ml).

Test solution Weigh accurately about 0.25 g of the powder (through No. 3 sieve) in a 20 ml volumetric flask, add about 18 ml of methanol, ultrasonicate (power, 250 W; frequency, 20 kHz) for 20 minutes, take out, add methanol to volume, mix well, filter and use as the test solution.

Procedure Inject accurately 10 μl of each of the reference solution and the test solution respectively into the column, and calculate the content.
It contains not less than 0.40 per cent of schisandrin ($C_{24}H_{32}O_7$).

Processing *Fructus Schisandrae* Eliminate foreign matter. Break into pieces before use.

Fructus Schisandrae (processed with vinegar) Steam the clean Fructus Schisandrae as described under the method for steaming with vinegar (Appendix Ⅱ D) until the drug becomes black in colour. Break into pieces before use.
Externally black, oily, somewhat lustrous. Sarcocarp soft, mucilaginous. Seeds coats brow nish-red, lustrous.

Action To astringe, replenish *qi*, promote production of body fluids, tonify the kidney, and induce sedation.

Indications Chronic cough and dyspnea; nocturnal emission, spermatorrhea; enuresis, frequent urination; protracted diarrhea; spontaneous sweating, night sweating; impairment of body fluids with thirst, shortness of breath and feeble pulse; diabetes and wasting-thirst caused by internal *heat*; palpitation and insomnia.

Usage and dosage 1.5-6 g.

Storage Preserve in a ventilated and dry place, protected from mould.

Fructus Schisandrae Sphenantherae (南五味子, Nanwuweizi)

Southern Magnoliavine Fruit

Southern Magnoliavine Fruit is the dried ripe fruit of *Schisandra Sphenanthera* Rehd. et Wils. The drug is collected in autumn when ripe, dried in the sun, removed from stalk and foreign matter.

Description Spheroidal or compressed-spheroidal, 4-6 mm in diameter. Externally brownish-red to dark brown, shrunken and shrivelled, pulp usually adhered to seeds closely. Seeds 1-2, kidney-shaped, externally brownish-yellow, lustrous, testa thin and fragile. Odour of pulp, slight; taste, slightly sour.

Identification To 1 g of the powder add 20 ml of chloroform, heat under reflux on a water bath for 30 minutes, filter and evaporate the filtrate to dryness. Dissolve the residue in 1 ml of chloroform as the test solution. Prepare the reference drug solution using 1 g of Fructus Schisandra Sphenantherae reference drug in the same manner. Dissolve deoxyschizandrin CRS in chloroform to produce a solution containing 1 mg per ml as the reference solution. Carry out the method for thin-layer chromatography (Appendix Ⅵ B), using silica gel GF_{254} as the coating substance and the upper layer of the mixture of petroleum ether (30-60℃)-ethyl formate-formic acid (15 : 5 : 1) as the mobile phase. Apply separately to the plate 2 μl each of the above three solutions. After developing and removal of the plate, dry in air, and examine under ultraviolet light at 254 nm, The spots in the chromatogram obtained with the test solution correspond in position and colour to the spots obtained with the reference drug solution and the reference solution.

Foreign matter Not more than 1 per cent (Appendix Ⅸ A).

Assay Carry out the method for high performance liquid chromatography (Appendix Ⅵ D).

Chromatographic system and system suitability Use octadecylsilane bonded silica gel as the stationary phase and a mixture of tetrahydrofuran-water (40 : 60) as the mobile phase. As detector a spectrophotometer set at 254 nm. The number of theoretical plates of the column is not less than 3000, calculated with the reference to the peak of schisantherin A.

Reference solution Dissolve a quantity of schisantherin A CRS, accurately weighed, in methanol to produce a solution containing 20 μg per ml as the reference solution.

Test solution Weigh accurately 0.5 g of the powder (through No. 3 sieve) in a stopper conical flask, add 50 ml of methanol, weigh methanol accurately, ultrasonicate (power, 250 W; frequency, 40 kHz) for 30 minutes, cool and weigh accurately again, replenish the loss of the solvent with methanol. Mix well, filter, use the successive filtrate as the test solution.

Procedure Inject accurately 5 μl of the reference solution and the test solution, respectively, into the column, and calculate the content.

It contains not less than 0.12 per cent of schisantherin A ($C_{30}H_{32}O_9$), calculated with reference to the dried drug.

Processing *Fructus Schisandra Sphenantherae* Eliminate foreign matter. Break into pieces before use.

Fructus Schisandra Sphenantherae (processed with vinegar) Steam the clean Fructus Schisandra Sphenantherae as described under the method for steaming with vinegar (Appendix II D) until the drug becomes black in colour. Break to pieces before use. Externally brownish-black, shrunken; pulp usually adhered to seeds closely and not viscous. Seeds: externally brown, lacklustre.

Action To astringe, replenish *qi*, promote production of body fluids, tonify the kidney, and induce sedation.

Indications Chronic cough and dyspnea; nocturnal emission, spermatorrhea; enuresis, frequent urination; protracted diarrhea; spontaneous sweating, night sweating; impairment of body fluids with thirst, shortness of breath and feeble pulse; diabetes and wasting-thirst caused by internal *heat*; palpitation and insomnia.

Usage and dosage 1.5-6 g.

Storage Preserve in a ventilated and dry place, protected from mould.

Fructus Setariae Germinatus (谷芽, Guya)

Millet Sprout

Millet Sprout is the dried ripe fruit of *Setaria italica* (L.) Beauv. (Fam. Gramineae) by germinating. The fruit is soaked in water at an appropriate temperature and moisture until the fibrous root grows up to about 4 mm long, and dried.

Description Subspheroidal, about 2 mm in diameter, apex obtuse-rounded, base somewhat acute. Outer shell consisting of coriaceous lemma and palea, pale yellow, with pointed wrinkles and fine primary fibrous roots on the lower part, about 3-6 mm long; a pale yellow or yellowish-white caryopsis (miller) visible when removed from the lemna and palea. Odour, slight; taste, slightly sweet.

Budding rate Carry out the method for Sampling of crude drugs (Appendix II A), taking 5 g of the drug by testing the amount of budding grains and of the total grains, calculate the percentage of budding rate.
The budding rate, not less than 85 per cent.

Processing *Fructus Setariae Germinatus* Eliminate froeign matter.

Fructus Setariae Germinatus (stir-baked) Stir-bake the clean Fructus Setariae Germinatus as described under the method for simple stir-baking (Appendix II D) until it becomes deep yellow.

Fructus Setariae Germinatus (charred) Stir-bake the clean Fructus Setariae Germinatus as described under the method for simple stir-baking (Appendix II D) until it becomes dark brown.

Action To promote digestion, invigorate the function of the spleen to improve appetite.

Fructus Setariae Germinatus (stir-baked) To promote digestion.

Fructus Setariae Germinatus (charred) To remove the retained food.

Indications Retention of undigested food with abdominal distension and foul breath; *inappetance due to deficiency* of the spleen and the stomach.

Fructus Setariae Germinatus (stir-baked) inappetance.

Fructus Setariae Germinatus (charred) Retention of undigested food.

Usage and dosage 9-15 g.

Storage Preserve in a ventilated and dry place, protected from moth.

Fructus Silybi (水飞蓟, Shuifeiji)

Fruit of Silybum Marianum

Fruit of Silybum Marianum is the dried ripe fruit of *Silybum marianum* (L.) Gaertn. (Fam. Compositae). The drug is collected in autumn when the fruit is ripe, dried in the sun, the fruit is tapped out, removed from foreign matter, and dried again in the sun.

Description Long-obovate or elliptical, 5-7 mm long, 2-3 mm wide. Externally grayish-brown or dark brown, smooth, and with fine longitudinal veins. Summit obtuse-rounded, slightly broad, with a circular ring at the top, and a pointed remain of style in the center; base slightly narrowed. Texture hard, cotyledons 2, pale yellowish-white, oily. Odour, slightly; taste, weak.

Identification (1) Powder: Greyish-brown. The cells of exocarp long polygonal in surface view, and some of them containing pigment. Cells of mesocarp cylindrical or elliptical, with retiform wrinkles. Prisms of calcium oxalate occurring in view. Stone cells of endocarp widely fusiform in surface view, and the stratification unobvious. Cells of cotyledons containing small clusters and oil droplets.
(2) To 0.5 g of powder, add 20 ml of petroleum, heat under reflux on a water bath for 30 minutes, and filter, discard the filtrate, and volatilize petroleum in the residue; add 20 ml of methanol in the residue, heat under reflux on a water bath for 30 minutes, filter and evaporate the filtrate to dryness. Dissolve the residue in 1 ml of methanol as the test solution. Dissolve a quantity of silybin CRS in methanol to produce a solution of 2 mg per ml as the reference solution. Carry out the method for thin layer chromatography (Appendix VI B), using silica gel G as the coating substance and the mixture of toluene, methyl acetate and formic acid (10 : 6 : 1) as the mobile phase. Apply separately 2 μl of the test solution and 5 μl of the reference solutions to the plate, develop two times and the developing distance is 8 cm per time. After developing and removal of the plate, dry in air. Spray with a solution of aluminium chloride in ethanol. Examine under ultraviolet light at 365 nm. The fluorescent spots in the chromatogram obtained with the test solution correspond in position and colour to the spots in the chromatogram obtained with the reference solution.

Water Carry out the method for the determination of water (Appendix IX H, method 1), not more than 10.0 per cent.

Total ash Not more than 9.0 per cent (Appendix IX K).

Extractives Carry out the hot extraction method for determination of ethanol-soluble extractives (Appendix X A), using ethanol as the solvent, not less than 18.0 per cent.

Assay Carry out the method for high performance liquid chromatography (Appendix VI D).

Chromatographic system and system suitability Use octadecylsilane bonded silica gel as the stationary phase, a mixture of methanol, water and glacial acetic acid (48 : 52 : 1) as the mobile phase. As detector a spectrophotometer set at 287 nm. The number of theoretical plates of the column is not less than 5000, calculated with the reference to the peak of silybin.

Reference solution Weigh accurately 12 mg of silybin CRS in a 50 ml of volumetric flask, add methanol to volume, and mix well. Measure accurately 5 ml of the solution in a 10 ml of volumetric flask, add methanol to volume, mix well, and used as the reference solution.

Test solution Weigh accurately 0.5 g of the coarse powder (pass through No. 3 sieve) to a stoppered conical flask, add accurately 50 ml of 75% methanol, weigh and heat under reflux on a water bath for 30 minutes, cool, weigh again and restore the original weight with 75% methanol to the initial weight, mix well, and stand. Filter through millipore membrane (0.45 μm), use the successive filtrate as the test solution.

Procedure Inject accurately 5 μl of the reference solution and the test solution into the column respectively, determine, and calculate the content with the sum of the two peak areas of silybin.
It contains not less than 0.60 per cent of silybin ($C_{25}H_{22}O_{10}$), calculated with reference to the dried drug.

Processing Eliminate foreign matter and ash.

Action To clear toxic *heat*, soothe the liver, and promote bile flow.

Indications Hypochondriac pain and jaundice due to *damp-heat* in the liver and gallbladder.

Usage and dosage Only in a patent medication.

Storage Preserve in a cool and dry place, and protected from moth.

Fructus Sophorae (槐角, Huaijiao)

Japanese Pagodatree Pod

Japanese Pagodatree Pod is the dried ripe fruit of *Sophora japonica* L. (Fam. Leguminosae). The drug is collected in winter, removed from foreign matter, and dried.

Description Beaded, 1-6 cm long, 0.6-1 cm in diameter. Externally yellowish-green or yellowish-brown, shrunken and rough, the side of the dorsal suture yellow. Texture soft, shrunken after drying, easily brocken at the collapsed part, fracture yellowish-green, viscous. Seeds 1-6, reniform, about 8 mm long, surface smooth, brownish-black, raphe at one side round, greyish-white; texture hard, cotyledons 2, yellowish-green, Odour of mesocarp weak; taste, bitter, testa of seeds bean-like on chewing.

Identification The retention time of the peaks obtained with the test solution and the reference solution under the **"Assay"** is concordant with each other.

Assay Carry out the method for high performance liquid chromatography (Appendix Ⅵ D).

Chromatographic system and system suitability Use octadecylsilane bonded silica gel as the stationary phase and a mixture of methanol, acetonitrile and 0.07% phosphate acid solution (12 : 20 : 68) as the mobile phase. As detector a spectrophotometer set at 260 nm. The number of theoretical plates of the column is not less than 3000, calculated with the reference to the peak of sophoricoside.

Reference solution Dissolve a quantity of sophoricoside CRS, accurately weighed, in methanol to produce a solution containing 40 μg per ml as the reference solution.

Test solution Weigh accurately 2 g of the powder (through No. 3 sieve) in a conical flask with stopper, add 50 ml of 70% ethanol, accurately measured, weigh accurately, and ultrasonicate (power, 300 W; frequency, 25 kHz) for 45 minutes, cool and weigh again, make up the loss in weight with 70% ethanol to the initial weight and mix well. Filter and measure accurately 0.5 ml of the successive filtrate in a 20 ml volumetric flask. Dilute with methanol to volume, mix well.

Procedure Inject accurately 10 μl of the reference solution and the test solution, respectively, into the column, and calculate the content.
It contains not less than 4.0 per cent of sophoricoside ($C_{21}H_{20}O_{10}$), calculated with reference to the dried drug.

Processing *Fructus Sophorae* Eliminate foreign matter.

Fructus Sophorae (stir-baked with honey) Stir-bake the clean Fructus Sophorae as described under the method for stir-baking with honey (Appendix Ⅱ D) until the surface becomes lustrous and unsticky, using 5 kg of refined honey per 100 kg of Fructus Sophorae.

Action To remove *heat* and quench excess *fire*, and arrest bleeding by reducing *heat* in blood.

Indications Hematochezia caused by *heat* in the large intestine, hemorrhoidal bleeding; headache, dizziness and congestion of the eyes due to *liver-heat*.

Usage and dosage 6-9 g.

Storage Preserve in a ventilated and dry place, protected from moth.

Fructus Terminaliae Billericae (毛诃子, Maohezi)

Belleric Terminalia Fruit

Belleric Terminalia Fruit is the dried ripe fruit of *Terminalia billerica* (Gaertn.) Roxb. (Fam. Combretaceae), used commonly by Tibetan nationality. The drug is collected in winter when ripe, removed from foreign matter, and dried in the sun.

Description Ovoid or ellipsoidal, 2-3.8 cm long, 1.5-3 cm in diameter. Externally brown, covered with reddish-brown pubescences, relatively fine and dense, 5 ribs and irregular wrinkles. Texture hard. Sarcocarp 2-5 mm thick, dark brown or pale greenish-yellow. Kern pale brownish-yellow. Seed 1, testa brownish-yellow, kernel yellowish-white, oily. Odour, slight; taste, astringent and bitter.

Identification (1) Powder: Yellowish-brown. Vasculum-like tracheary element, lignified. Non-glandular hairs easily visible, 2-3 celled brownish-yellow content containing. Clusters of calcium oxalate abundant, 17-54 μm in diameter. Stone cells subrounded, oval or rectangular; pit-canal well-marked, striations libriform. Fibre of endocarp, walls thickened, lignified, pit-canal well-marked. Exocarp cells with reticulated pits. Oil droplets and spiral vessels visible.
(2) To 2 g of the powder add 10 ml of ether, shake for 10

minutes, discard the ether, evaporate the residue to dryness. Add 20 ml of ethyl acetate, heat under reflux for 1 hour, cool and filter, evaporate the filtrate to dryness. Dissolve the residue in 2 ml of methanol as the test solution. Dissolve gallic acid CRS in methanol to produce a solution containing 0.5 mg per ml as the reference solution. Carry out the method for thin layer chromatography (Appendix VI B), using silica gel G containing sodium carboxymethylcellulose as the coating substance and a mixture of toluene (water saturated)-ethyl formate-formic acid (5∶4∶1) as the mobile phase. Apply separately 5 μl of each of the two solutions to the plate. After developing and removal of the plate, dry in air. Spray with a solution of ferric chloride TS. The spot in the chromatogram obtained with the test solution corresponds in position and colour to the spot in the chromatogram obtained with the reference solution.

Water Not more than 12.0 per cent (Appendix IX H, method 1).

Total ash Not more than 5.0 per cent (Appendix IX K).

Extractives Carry out the cold maceration method for determination of water-soluble extractives (Appendix X A), not less than 20.0 per cent.

Action To remove toxic *heat*, artinge nourish blood, and coordinate the actions of various ingredients in a prescription.

Indications Various febrile diseases; diarrhea, impetigo; liver and gallbladder diseases; debility during convalescence.

Usage and dosage 3-9 g; usually made into pills or powder.

Storage Preserve in a dry place, protected from moth.

Fructus Toosendan (川楝子, Chuanlianzi)

Szechwan Chinaberry Fruit

Szechwan Chinaberry Fruit is the dried ripe fruit of *Melia toosendan* Sieb. et Zucc. (Fam. Meliaceae). The drug is collected in winter when ripe, removed from foreign matter, and dried.

Description Subspherical, 2-3.2 cm in diameter. Externally golden to brownish-yellow, somewhat lustrous, rarely dented or shrunken, with deep brown small dots. Apex with remains of style attached, base with dent and a fruit stalk scar. Epicarp leathery, usually forming a space with sarcocarp. Sarcocarp loose and soft, pale yellow, viscous when moistened with water. Kernels spherical or ovoid, texture hard, both ends truncate, with 6-8 longitudinal ribs and 6-8 loculi, each loculus containing a blackish-brown oblong seed. Odour, characteristic; taste, sour and bitter.

Identification (1) Powder: Yellowish-brown. Pericarp fibre bundles, 9-36 μm in diameter, the end subrounded, walls thickened, surrounded with parenchymatous cells containing prisms of calcium oxalate, forming crystal fibres. Pericarp stone cells subrounded, unevenly elongated or polygonal, 14-54 μm in diameter, 150 μm long with warty protruding or short obtuse-rounded branches. Testa cells fresh yellow or yellowish-orange, with 1 layer of subsquare cells, 44 μm in diameter, walls thickened, with longitudinal lightly sinuous striation, connecting to pigment layer. Epidermal cell polygonal in surface view, with granular striation. Lumen of pigment layer cells of testa containing reddish-brown substance. Testa contain crystal cells, 13-27 μm in diameter, lumen contain lightly yellow, yellowish-brown or reddish-brown substance, and containing minute prisms of calcium oxalate, 5 μm in diameter. Calcium oxalate crystals 5-27 μm in diameter.

(2) To 1 g of the powder add 30 ml of ethanol, ultrasonicate for 30 minutes, filter and evaporate the filtrate to dryness. Dissolve the residue in 1 ml of ethanol as the test solution. Prepare a solution of 1 g of Fructus Toosendan reference drug in the same manner as the reference drug solution. Carry out the method for thin layer chromatography (Appendix VI B), using silica gel G mixed with sodium carboxymethyl cellulose as the coating substance and a mixture of toluene-acetone (9∶1) as the mobile phase. Apply separately 4 μl of the test solution and the reference drug solution to the plate. After developing and drug removal of the plate, dry in air. Fume it in iodine vapour to the spots clear. The spots in the chromatogram obtained with test solution correspond in position and colour to the spots in the chromatogram obtained with the reference drug solution.

Water Not more than 12.0 per cent (Appendix IX H, method 1).

Extractives Carry out the hot extraction method for determination of water-soluble extractives (Appendix X A), not less than 32.0 per cent.

Processing *Fructus Toosendan* Eliminate foreign matter. Break to pieces before use.

Fructus Toosendan (stir-baked) Cut clean Fructus Toosendan into thick slices or pulverize, stir-bake the drug as described under the method for simple stir-baking (Appendix II D) until the outer surface turns brown.

Action To relieve pain by smoothing the flow of the *liver-qi* and repel worms.

Indications Distending pain in the hypochondrium, epigastrium or in the abdomen; abdominal pain due to intestinal parasitosis.

Usage and dosage 4.5-9 g.

Storage Preserve in a ventilated and dry place, protected from moth.

Fructus Tribuli (蒺藜, Jili)

Puncturevine Caltrop Fruit

Puncturevine Caltrop Fruit is the dried ripe fruit of *Tribulus terrestris* L. (Fam. Zygophyllaceae). The plant is collected in autumn when ripe, dried in the sun. The drug is tapped out, and removed from foreign matter.

Description Fruit consisting of 5 mericarps, radially arranged, 7-12 mm in diameter. Often spliting into single mericarp, hatchet-shaped, 3-6 mm long; dorsal surface yellowish-green, prominent, with longitudinal ribs and numerous spinlets, bearing symmetrically a pair of long spines and a pair of short spines; two lateral surfaces rough, with reticular striations, greyish-white. Texture hard. Odour, slight; taste, bitter and pungent.

Identification (1) Powder: Yellow-green. Pericarp fibres lignified, with upper and lower layers in crisscross arrangement, a few scattered singly, sometimes fibre bundles connected with stone cells. Stone cells elongated-elliptical or subrounded, occuring in groups. Testa cells polygonal or subsquare, about 30 μm in diameter, walls reticulately thickened, lignified. Prisms of calcium oxalate 8-20 μm in diameter.

(2) To 3 g of the powder add 50 ml of chloroform, ultrasonicate for 30 minutes, filter, discard chloroform, and evaporate the residue to dryness. Add 1 ml of water, mix well and add 50 ml of water saturation solution in *n*-butanol, ultrasonicate for 30 minutes, separate the upper layer, wash with 2 times in volume of ammonia TS, discard the washing. Evaporate the *n*-butanol layer to dryness, and dissolve the residue in 1 ml of methanol as the test solution. Prepare a solution of 3 g of Fructus Tribuli reference drug in the same manner as the reference drug solution. Carry out the method for thin layer chromatography (Appendix Ⅵ B), using silica gel G as the coating substance and the lower layer of the mixture of chloroform-methanol-water (13 : 7 : 2) allowed to stand below 10℃ as the mobile phase. Apply separately 5 μl of the test solution and the reference drug solution to the plate. After developing and removal of the plate, dry in air. Spray with *p*-dimethylaminobenzaldehyde modified TS (dissolve 1 g of *p*-dimethylaminobenzaldehyde in 34 ml of hydrochloric acid and 100 ml of methanol, mix well). Heat at 105℃ to the spots clear. The spots in the chromatogram obtained with test solution correspond in position and colour to the spots in the chromatogram obtained with the reference drug solution.

Water Not more than 9.0 per cent (Appendix Ⅸ H, method 1).

Total ash Not more than 12.0 per cent (Appendix Ⅸ K).

Processing *Fructus Tribuli* Eliminate foreign matter.

Fructus Tribuli (*stir-baked*) Stir-bake the clean Fructus Tribuli as described under the method for simple stiry-baking (Appendix Ⅱ D) until a pale yellow colour is produced.

Action To subdue hyperactivity of the liver, promote blood circulation, dispel *wind* to nebula, and to arrest itching.

Indications Headache and dizziness, distending pain in the hypochondrium; cessation of lactation, mastitis; bloodshot eyes of nebula; urticaria with itching.

Usage and dosage 6-9 g.

Storage Preserve in a dry place, protected from mould.

Fructus Trichosanthis (瓜蒌, Gualou)

Snakegourd Fruit

Snakegourd Fruit is the dried ripe fruit of *Trichosanthes kirilowii* Maxim. or *Trichosanthes rosthornii* Harms (Fam. Cucurbitaceae). The drug is collected with fruit stalk in autumn, and dried in ventilated shade.

Description Subspherical or broadly ellipsoidal, 7-15 cm long, 6-10 cm in diameter. The outer surface orange-red or orange-yellow, shrunken or relatively smooth. Apex with a rounded style scar, base slightly acute, with remains of fruit stalk. Varying in weight. Texture fragile, easily split, the inner surface yellowish-white, with reddish-yellow reticulation, sarcocarp orange-yellow, viscous, adhering to many seeds into a mass. Odour, caramel-like; taste, slightly sour and sweet.

Processing Eliminate fruit stalks and soil, flatten, cut into slivers or pieces.

Action To remove *heat* and eliminate phlegm, alleviate chest pain, and to facilitate bowel movement.

Indications Cough with thick purulent sputum; angina pectoris and stuffiness sensation in the chest and epigastrium; mastitis, lung abscess, appendicitis; constipation.

Usage and dosage 9-15 g.

Precaution Incompatible with aconite and allied drugs.

Storage Preserve in a cool and dry place, protected from mould and moth.

Fructus Tsaoko (草果, Caoguo)

Caoguo

Caoguo is the dried ripe fruit of *Amomum tsaoko* Crevost et Lemaire (Fam. Zingiberaceae). The drug is collected in autumn when ripe, removed from foreign matter, and dried in the sun or at a low temperature.

Description Long ellipsoid, 3-obtuse-ridged, 2-4 cm long, 1-2.5 cm in diameter. Externally greyish-brown to reddish-brown, with longitudinally furrows and ribs, a rounded and projected stylopodium on the summit and a fruit stalk or its scar at the base. Pericarp tough, easily torn off longitudinally. On peeling off the exocarp the central part showing yellowish-brown septa dividing the masses of seeds into 3 groups, each having mostly 8-11 seeds. Seeds conical polyhedral, about 5 mm in diameter, externally reddish-brown, covered with greyish-white membranous aril. Seed with a longitudinal furrowed raphe and a dented hilum at the apex; texture hard, endosperm greyish-white. Odour, characteristic aromatic; taste, pungent and slightly bitter.

Identification (1) Transverse section of seed: Parenchymatous cells of arillus containing starch granules. Epidermal cells of testa brown, rectangular with relatively thick wall, hypodermis consisting of 1 layer of parenchymatous cells containing yellow contents; 1 row of oil cells, subsquare or rectangular, 42-162 μm long tangentially and 48-68 μm long radially, containing yellow oil droplets; pigment layer consisting of several rows of brown cells. Tegmen consisting of 1 row of palisade stone cells, reddish-brown, with heavily thickened inner and lateral walls, lumen small, containing silica bodies. Cells of perisperm containing starch granules and a few small clusters and prisms of calcium oxalate. Cells of endosperm containing aleurone granules and starch granules.

(2) Dissolve a quantity of volatile oil obtained under Assay in ethanol to produce a solution containing 50 μl per ml as the test solution. Dissolve a quantity of cineole in ethanol to produce a solution containing 20 μl per ml as the reference solution. Carry out the method for thin layer chromatography (Appendix Ⅳ B), using silica gel G as the coating substance and a mixture of *n*-hexane and ethyl acetate (17 : 3) as the mobile phase. Apply separately 1 μl of each of the two solutions to the plate. After developing and removal of the plate, dry in air, spray with 5% solution of vanillin in sulfuric acid, and heat at 105℃ for several minutes. The blue spot in the chromatogram obtained with the test solution corresponds in position and colour to the spot in the chromatogram obtained with the reference solution.

Water Not more than 15.0 per cent (Appendix Ⅸ H, method 2).

Total ash Not more than 8.0 per cent (Appendix Ⅸ K).

Assay Carry out the method for determination of volatile oil (Appendix Ⅹ D).

The seeds contain not less than 1.4 per cent (ml/g) of volatile oil.

Processing *Seeds of Fructus Tsaoko* Stir-bake the fructus Tsaoko as described under the method for simple stir-baking (Appendix Ⅱ D) until it becomes brown and slightly inflated and then remove the husk to collect the seeds. Break into pieces before use.

Seeds of Fructus Tsaoko (processed with ginger) Stir-bake the seeds of Fructus Tsaoko as described under the method for stir-baking with ginger juice (Appendix Ⅱ D) to dryness. Break into pieces before use.

Action To dry *cold-damp* and warm the *middle-energizer*, dispel *phlegm* and cure malaria.

Indications Accumulation of *cold-damp* in the spleen and the stomach with manifestations of epigastric and abdominal distension, fullness sensition and vomiting; malaria with paroxysms of chills and fever.

Usage and dosage 3-6 g.

Storage Preserve in a cool and dry place.

Fructus Viticis (蔓荆子, Manjingzi)

Shrub Chastetree Fruit

Shrub Chastetree Fruit is the dried ripe fruit of *Vitex trifolia* L. var. *simplicifolia* Cham. or *Vitex trifolia* L. (Fam. Verbenaceae). The drug is collected in autumn when ripe, removed from foreign matter, and dried in the sun.

Description Spheroidal, 4-6 mm in diameter. Externally greyish-black or blackish-brown, covered with greyish-white frost-like hairs, bearing 4 longitudinal shallow furrows; apex slightly concave, with greyish-white persistent calyx and short fruit stalk at base. Calyx is ⅓-⅔ length of the fruit, 5-toothed, 2 of them relatively deep. and covered with densely pubescent. Texture light and hard, uneasily broken. Transverse section showing 4 loculi, each with 1 seed. Odour, characteristic and aromatic; taste, weak and slightly pungent.

Identification (1)Powder: Greyish-brown. Epidermal cells of calyx subrounded, walls frequently sinuous; non-glandular hairs 2-3 celled, apical cell relatively wide with warty protrudings. Cells of epicarp polygonal, with cuticle striations and scars of haris, bearing glandular hairs and non-glandular hairs. Glandular hairs in two types: one with a unicellular head and a 1-2 celled stalk, and the other a 2-6 celled head and a unicellular stalk. Non-glandular hairs, 2-4 celled, 14-68 μm long, often curved, warty-walled. Cells of mesocarp oblong or subrounded, walls slightly lignified, and with distinct pits. Vittae frequently broken, containing secretions, adjacent cells containing pale yellow oil droplets. Stone cells of endocarp elliptical or subsquare, 10-35 μm in diameter. Cells of testa rounded or subrounded, 42-73 μm in diameter, with reticulate striated and lignified walls.
(2) To 5 g of the powder add 50 ml of petroleum ether (60-90℃), heat under reflux for 2 hours, filter and discard the petroleum ether, evaporate the residue to dryness. Add 80 ml of acetone to the residue, heat under reflux for 1.5 hours, filter and evaporate the filtrate to dryness. Dissolve the residue with 2 ml methanol as the test solution. Dissolve vitexicarpin CRS in methanol to produce a solution containing 1 mg per ml as the reference solution. Carry out the method for thin layer chromatography (Appendix Ⅵ B), using silica gel G prepared by 1% solution of sodium hydroxide as the coating substance and a mixture of cyclohexine, ethyl acetate and methanol (3 : 2 : 0.2) as the mobile phase. Apply separately 5 μl of each of the two solutions to the plate. After developing and removal of the plate, dry in air. Spray with a 10% solution of aluminum chloride. The spot in the chromatogram obtained with the test solution corresponds in position and colour to the spot in the chromatogram obtained with the reference solution.

Foreign matter Not more than 2 per cent (Appendix Ⅸ A).

Water Not more than 14.0 per cent (Appendix Ⅸ H, method 2).

Total ash Not more than 7.0 per cent (Appendix Ⅸ K).

Extractives Carry out the hot extraction method for determination of ethanol-soluble extractives (Appendix Ⅹ A), using methanol as the solvent, not less than 8.0 per cent.

Assay Carry out the method for high performance liquid chromatography (Appendix Ⅵ D).

Chromatographic system and system suitability Use octadecylsilane bonded silica gel as the stationary phase and a mixture of methanol and 0.4% phosphoric acid solution (60 : 40) as the mobile phase. As detector a spectrophotometer set at 258 nm. The number of theoretical plates of the column is not less than 2000, calculated with the reference to the peak of vitexicarpin.

Reference solution Dissolve a quantity of vitexicarpin CRS, accurately weighed, in methanol to produce a solution of 30 μg per ml.

Test solution Weigh accurately 2 g of the powder (through No. 3 sieve) in a conical flask with stopper, add 50 ml of methanol, accurately measured, and weigh accurately, heat under reflux for 1 hour, cool and weigh again, make up the loss in weight with methanol to the initial weight and mix well. Filter and use the filtrate as the test solution.

Procedure Inject accurately 10 μl of the reference solution and 10 μl of the test solution into the column, and calculate the content.
It contains not less than 0.030 per cent of vitexicarpin ($C_{19}H_{18}O_8$), calculated with reference to the dried drug.

Processing *Fructus Viticis* Eliminate foreign matter.

Fructus Viticis (stir-baked) Stir-bake gently the clean Fructus Viticis as described under the method for simple stir-baking (Appendix Ⅱ D). Break into pieces before use.

Action To dispel *wind-heat* from the head and eyes.

Indications Headache in common cold due to *wind-heat*; painful swelling of the gums; inflammation of the eyes with lacrimation, poor eyesight or blurred vision and dizziness.

Usage and dosage 5-9 g.

Storage Preserve in a cool and dry place.

Fructus Xanthii (苍耳子, Cang'erzi)

Siberian Cocklebur Fruit

Siberian Cocklebur Fruit is the dried ripe bur with involucre of *Xanthium sibiricum* Patr. (Fam. Compositae). The drug is collected in autumn when ripe, dried and removed from stalk, leaf and other foreign matter.

Description Fusiform or ovoid, 1-1.5 cm long, 4-7 mm in diameter. Externally yellowish-brown or yellowish-green, with hooked spines throughout. Summit with 2 relatively thick spines, separated or linked up, base with a fruit stalk scar. Texture hard and flexible, the centre of transverse section showing a septum and 2 loculi, each having an achene. Achene slightly fusiform, relatively even at one side, apex with a protruding remains of style, pericarp thin, greyish-black, with longitudinal wrinkles. Testa membranous, pale grey, cotyledons 2, oily. Odour, slight; taste, slightly bitter.

Identification (1) Powder: Pale yellowish-brown to pale yellowish-green. Fibre bind or single, acerose and fusiform, pits and pit-canals visible or invisible, lignified thin-walled cells subquadrate, with pits. Cotyledon cells containing aleurone grains and oil droplets.
(2) To 2 g of the powder, add 25 ml of methanol, heat under reflux for 20 minutes and filter. Concentrate the filtrates to about 2 ml as the test solution. Produce a solution of 2 g of Fructus Xanthii reference drug in the same manner as the reference drug solution. Carry out the method for thin layer chromatography (Appendix Ⅵ B), using silica gel G mixed with sodium carboxymethylcellulose as the coating substance and the upper layer of the mixture of n-butanol, glacial acetic acid and water (4 : 1 : 5) as the mobile phase. Apply separately 4 μl of each of two solutions to the plate. After developing and removal of the plate, dry in air, expose in ammonia vapour to the spot clear. The fluorescent spot in the chromatogram obtained with the test solution corresponds in position and colour to the spot in the chromatogram obtained with the reference drug solution.

Water Carry out the method as described under the determination of water (Appendix Ⅸ H, method 1), not more than 12.0 per cent.

Total ash Not more than 5.0 per cent (Appendix Ⅸ K)

Acid-insoluble ash Not more than 1.0 per cent (Appendix Ⅸ K)

Processing *Fructus Xanthii* Eliminate foreign matter.

Fructus Xanthii (*stir-baked*) Stir-bake the clean Fructus Xanthii as described under the method for simple stir-baking (Appendix Ⅱ D) to yellowish-brown, remove the spines and sift.

Action To dispel *wind* and *damp*, and relieve nasal obstruction.

Indications Headache caused by exterior *wind-cold*; rhinitis or sinusitis with nasal discharge; urticaria with itching; arthritis with muscular contracture caused by *wind-damp*.

Usage and dosage 3-9 g.

Storage Preserve in a dry place.

Galamina
(炉甘石, Luganshi)

Galamine

Galamine is a mineral of carbonates of smithsonite of calcite group, containing mainly zinc carbonate ($ZnCO_3$). The drug is collected, washed clean, dried in the sun, and removed from foreign matter.

Description Aggregate of masses, irregular; greyish-white or pale red. Externally powdery, lustreless, uneven, porous and honeycomb-like. Texture light, easily broken. Odour, slight; taste, slightly astringent.

Identification (1) To 1 g of the coarse powder add 10 ml of dilute hydrochloric acid TS effervescence is produced immediately. Pass the gas into calcium hydroxide TS, a white precipitate is produced.
(2) Dissolve 1 g of the coarse powder in 10 ml of dilute hydrochloric acid TS and filter. To the filtrate add potassium ferrocyanide TS, a white precipitate or a white precipitate scattering with a few blue precipitate is produced.

Assay Weigh accurately about 0.1 g of the powder previously dried at 105℃ for 1 hour to a conical flask. Add 10 ml of dilute hydrochloric acid TS and dissolve zinc salts by shaking. Add 10 ml of each of concentrated ammonia TS and ammonia-ammonium chloride BS (pH 10.0), mix well, add 10 ml of sodium dihydrogen phosphate TS, shake and filter. Wash the conical flask and the residue with three 10 ml quantities of a mixture of ammonia-ammonium chloride BS (pH 10.0) and water (1 : 4). Combine the washings and the filtrate, add 15 ml of a 30% solution of triethanolamine and a small quantity of eriochrome black T indicator mixture, titrate with disodium edetate (0.05 mol/L) VS until the colour turns from purple to pure blue. Each ml of disodium edetate (0.05 mol/L) VS is equivalent to 4.069 mg of zinc oxide (ZnO).
It contains not less than 40.0 per cent of zinc oxide (ZnO), calculated with reference to the dried drug.

Processing *Calamina* Eliminate foreign matter and break to pieces.

Calamina (*calcined*) Calcine the clean Calamina as described under the method for calcining openly (Appendix Ⅱ D) until red thoroughly, then levigate as described under the method for levigating (Appendix Ⅱ D) and dry in the sun.

Action To counteract *toxicity*, clear nebula and improve eyesight, arrest discharges and heal ulcers, and relieve itching.

Indications Inflammation of the eyes, tarsitis, pterygium, corneals opacity; skin ulceration with purulent discharge or exudation; pruritus.

Usage and dosage Appropriate quantity for external use.

Storage Preserve in a dry place.

Galla Chinensis
(五倍子, Wubeizi)

Chinese Gall

Chinese Gall is the gall produced mainly by parasitic

aphids of *Melaphis chinensis* (Bell) Baker on the leaf of *Rhus chinensis* Mill., *Rhus potaninii* Maxim. or *Rhus punjabensis* Stew. var. *sinica* (Diels) Rehd. et Wils. (Fam. Anacardiaceae). The drug is collected in autumn, boiled in water for a moment or steamed until its outer surface shows grey so as to kill the aphids, and then taken out. According to its form the drug is divided into "Dubei" and "Jiaobei".

Description *Dubei* Oblong or spindle-globular, 2.5-9 cm long, 1.5-4 cm in diameter. Externally greyish-brown, slightly pubescent. Texture hard and fragile, easily broken, fracture horny, lustrous, gall walls 0.2-0.3 cm thick, inner surface smooth and showing black-brown killed aphids and grey-powdery excreta. Odour, characteristic; taste, astringent.

Jiaobei Rhombic with irregular-corniform branchings and distinct pubescences, gall walls relatively thin.

Identification To 0.5 g of the powder add 5 ml methanol, ultrasonicate for 15 minutes, filter and the filtrate is used as the test solution. Prepare a solution of *Galla Chinensis* reference drug in the same manner as the reference drug solution. Dissolve gallic acid CRS in mathanol to produce a solution containing 1 mg per ml as the reference solution, Carry out the method for thin layer chromatography (Appendix Ⅵ B), using silica gel GF_{254} as the coating substance and a mixture of chloroform, ethyl formate and formic acid (5 : 5 : 1) as the mobile phase. Apply separately to the plate 2 μl each of the solutions. After developing and removal of the plate, dry in air, and examine under ultraviolet light at 254 nm. The fluorescent spot in the chromatogram obtained with the test solution corresponds in position and colour to the fluorescent spot obtained with the reference drug solution and the reference solution.

Water Carry out the determination of water (Appendix Ⅸ H, method 1), not more than 12.0 per cent.

Total ash not more than 3.5 per cent (Appendix Ⅸ K).

Assay ***tanninoids*** Weigh accurately 0.2 g of the powder (pass through No. 4 sieve), carry out the determination of tanninoids (Appendix Ⅹ B).
It contains not less than 50.0 per cent of tanninoids, calculated with reference to the dried drug.

galic acid Carry out the method for high performance liquid chromatography (Appendix Ⅵ D).

Chromatographic system and system suitability Use a column packed with octadecylsilane bonded silica gel as the stationary phase and the mixture of methanol and 0.1% phosphoric acid (15 : 85) as mobile phase. As detector a spectrophotometer set at 273 nm. The number of the theoretical plates of the column is not less than 3000, calculated with the reference to the peak of galic acid.

Reference solution dissolve a quantity of galic acid, accurately weighed, in 50% methanol to produce a methanol solution containing 0.04 mg of galic acid per ml, and mix well.

Test solution To 0.5 g of the powder (pass through No. 4 sieve), accurately weighed, add accurately 50 ml of 4 mol/L hydrochloric acid, hydrolysed on a water bath for 3.5 hour, cool, filter, measure accurately 1 ml of the successive filtrate in a 100 ml volumetric flask, dilute with 50% methanol to volume, mix well.

Procedure Inject accurately 10 μl of the reference solution and of the test solution respectively into the column, and calculate the contents.
It contains not less than 50.0 per cent hydrolysed galic acid ($C_7H_6O_5$), calculated with reference to the dried drug.

Processing Break and eliminate foreign matter.

Action To remove *heat* from the lung, arrest cough, diarrhea, excessive sweating, bleeding and exudations.

Indications Cough and expectoration due to *heat* in the lung; chronic cough, chronic dysentery and diarrhea, night sweating, hematochezia, hemorrhoidal bleeding, traumatic bleeding, abscess, sores and skin lesions with exudation; diabetes.

Usage and dosage 3-6 g; appropriate quantity for external use.

Storage Preserve in a ventilated and dry place, protected from pressure.

Ganoderma
(灵芝, Lingzhi)

Glossy Ganoderma

Ganoderma is the dried sporophore of *Ganoderma lucidum* (Leyss. Ex Fr.) Karst. or *Ganoderma sinensis* Zhao, Xu et Zhang. (Fam. Polyporaceae). The drug is collected all the year, removed from foreign matter, attached rotten wood, sand or the lower stipe of the culture matrix, dried in the shade or stove at 40-50℃.

Description *Ganoderma lucidum* Outline firmbriate, pileus reniform, semi-rounded or subrounded, 10-18 cm in diameter, 1-2 cm thick. Shell hard, yellowish-brown to redish-brown, lustrous, with circular arris-ed stripe and radiate wrinkle, edge thin and even, frequently incurved slightly. The inner part white to brownish. Stip cylinder, laterally grown, few leaning grown, 7-15 cm long, 1-3.5 cm in diameter, reddish-brown to purplish brown, luminous. Spore small and fine, yellowish-brown. Odour, slightly aromatic, taste, bitter and puckery.

Ganoderma sinensis Shell purplish-black, with lacquer-like lustre. Sporophore rusty-brown. Stip 17-23 cm long.

Cultivated Ganoderma Sporophore relatively sturdy, plump, 1-22 cm in diameter, 1.5-4 cm thick. Shell frequently coated with a large of yellowish-brown powder-like spores.

Identification (1) Powder: pale brown, dark brown, yellowish-brown. Hyphae scattered or grouped, colourless or pale brown, slim, slightly curved, branched, 2.5-6.5 μm in diameter. Spores brown, ovate, apex even, external walls colourless, inner walls with protuberance, 8-12 μm long, 5-8 μm wide.
(2) To 2 g of the coarse powder add 30 ml of methanol, heat and reflux for 30 minutes, filter, evaporate the filtrate to dryness, add 2 ml of methanol to dissolve the residue, and use it as the test solution. Prepare a solution of Ganoderma reference drug in the same manner, and use it as the reference drug solution. Carry out the method for thin layer chromatography (Appendix Ⅵ B), using silica gel G as the coating substance and a mixture of petroleum ether (60-90℃)ethyl formate and formic acid (15 : 5 : 1, upper layer) as the mobile phase. Apply separately to the plate 4 μl each of the two solutions. After developing and removal of the plate, dry in air, examine under ultraviolet light at 365 nm. The fluorescent spot in the chromatogram obtained with the test solution corresponds in position and colour to the spot in the chromatogram obtained with the reference drug solution.

Water Carry out the method for determination of water (Appendix Ⅸ H, method 1), not more than 17.0 per cent.

Total ash Not more than 3.2 per cent (Appendix Ⅸ K).

Acid-insoluble ash Not more than 0.5 per cent (Appendix Ⅸ K).

Extractives Carry out the hot extraction method for determination of water-soluable extractives (Appendix Ⅹ A), not less than 3.0 per cent.

Assay *Reference solution* Weigh accurately a quantity of anhydrous dextrose CRS, dried previously to constant weight at 105℃, in a volumetric flask, dissolve and dilute with water to volume, and mix well to produce a solution containing 0.1 mg per ml as the reference solution.

Calibration standard Measure accurately 0.2, 0.4, 0.6, 0.8, 1.0, and 1.2 ml of the reference solution respectively into a 10 ml stopper test tube and add to a total of 2.0 ml with water, Measure accurately 6 ml of the solution of anthrone sulphate (dissolve 0.1 g of anthrone, accurately weighed, to 100 ml of 80% sulfuric acid, and mix well), mix well, heat on a water bath for 15 minutes, cool on an ice water bath for 15 minutes. Carry out the method for ultraviolet spectrophotometry and colourimetry (Appendix Ⅴ A), perform a black determination with the relative test solution, measure the absorbance at 625 nm and plot the standard curve, using the absorbance as ordinate and the concentration as abscissa.

Test solution Weigh accurately 2 g of the powder into a Soxhlet's extractor, extract with 90 ml of water under reflux on an electric heated thermostat until the extract colourless, transfer the extract to a 100 ml volumetric flask, dilute with water to volume, and mix well. Measure accurately 10 ml, add 150 ml of ethanol and mix well, cool at 4℃ for 12 hours, removal of the flask, centrifuge, and discard the upper layer of the clarified liquid. Dissolve the residue with water and transfer it to 50 ml volumetric flask, dilute with water to volume, and mix well.

Procedure Measure accurately 2 ml of the test solution, into a 10 ml stopper test tube, carry out the procedure as described under calibration standard, beginning at the words "measure accurately 6 ml of …", measure the absorbance at 625 nm and read out the weight of anhydrous dextrose (mg) in the test solution from the standard curve, and calculate the content of polysaccharides of Ganoderma.

It contains not less than 0.50 per cent of polysaccharides of Ganoderma, calculated as anhydrous dextrose ($C_6H_{12}O_6$) with reference to the dried drug.

Action To replenish *qi* and ease the mind, relieve cough and asthma.

Indications Dizziness, insomnia, palpitation, shortness of breath, asthenic cough and asthma.

Usage and dosage 6-12 g.

Storage Preserve in a dry place, protected from mould and moth.

Gecko
(蛤蚧, Gejie)

Tokay Gecko

Tokay Gecko is the dried body of *Gekko gecko* Linnaeus (Fam. Gekkonidae). The animal is captured all the year round, removed from the viscera, wiped, opened with bamboo piece to make the whole body flattened and straight, and dried at a low temperature.

Description Flattened slice in shape, head, neck and trunk 9-18 cm long, head and neck about one third as long as snout-vent length; dorsum and abdomen 6-11 cm wide; tail 6-12 cm long. Head somewhat flat triangular, two eyes deeply sunken into holes. Tiny teeth present in the mouth at the margin of the jaw, heteromorphic large tooth lacking. Snout hemicycle, rostral not contacting with nostril, but contact with nasal; 1 piece of supranasal at each side, 12 to 14 pairs of upper labial, 21 pieces of lower labial (including mentals). Trunk elliptic, abdomen thin, dorsum greyish-black or silver-grey with yellowish-white or greyish-green spots scattered or concentrated to indistinct patterns. Vertebrae and ribs of both sides projecting. Four limbs all having 5 digits, bearing suckers at the base, and traces of web between the digits. Tail narrow and strong, caudal vertebrae barely visible. Ground colour of the tail similar to that of the dorsum, with 6-7 distinct silver-grey circular band. Whole body densely covered with rounded or polygonal and somewhat lustrous tiny scales. Odour, stinking; taste, slightly salty.

Processing *Gecko* Eliminate head, legs and scales, cut into small pieces.

Gecko (*processed with wine*) Soak the pieces of Gecko with yellow rice wine, dry at a low temperature.

Action To reinforce the function of the lung and the kidney, to relieve asthma, and to promote virility and replenish essence.

Indications Dyspnea or asthma in a deficiency syndrome; cough and hemoptysis in consumptive diseases; impotence, seminal emission.

Usage and dosage 3-6 g, mostly in forms of pills, powder or medicinal wine.

Storage Preserve in tightly closed wood boxes, usually mixed with Pericarpium Zanthoxyli, stored in a cool and dry place, protected from moth.

Gypsum Fibrosum
(石膏, Shigao)

Gypsum

Gypsum is a plaster stone of sulfates of plaster stone group, containing mainly hydrated calcium sulfate ($CaSO_4 \cdot 2H_2O$). The drug is collected, removed from foreign matter.

Description Fibrous aggregates in long, plate-shaped or irregular pieces; white, greyish-white or pale yellow, sometimes translucent; texture soft and heavy, longitudinally cut surface with silky lustre. Odour, slight; taste, weak.

Identification (1) Ignite a piece of the drug (about 2 g) in a test tube covered with a pored cork stopper; the moisture is produced on the tube wall and the small piece turns to opaque.

(2) To 0.2 g of the powder add 10 ml of dilute hydrochloric acid TS, heat to dissolve, the solution yields the reactions characteristic of calcium salts and sulfates (Appendix Ⅳ).

Heavy metals Boil 8 g of the drug in 4 ml of glacial acetic acid and 96 ml of water for 10 minutes, cool, add water to

the original volume, filter. Using 25 ml of the filtrate, carry out the limit test for heavy metals (Appendix Ⅸ E, method 1), not more than 10 ppm.

Arsenic To 1 g of the drug, add 5 ml of hydrochloric acid, and add water to 23 ml, heat to dissolve, cool, carry out the limit test for arsenic (Appendix Ⅸ F, method 2), not more than 2 ppm.

Assay Weigh accurately about 0.2 g of the fine powder to a conical flask, add 10 ml of dilute hydrochloric acid TS, heat to dissolve, add 100 ml of water and 1 drop of methyl red IS, add dropwise potassium hydroxide TS until the solution turns to pale yellow, then add an excess of 5 ml. Add a small quantity of calcein indicator mixture, titrate with disodium edetate (0.05 mol/L) VS until the yellowish-green fluorescence disappears and the colour turns to orange. Each ml of disodium edetate (0.05 mol/L) VS is equivalent to 8.608 mg of $CaSO_4 \cdot 2H_2O$.
It contains not less than 95.0 per cent of hydrous calcium sulfate ($CaSO_4 \cdot 2H_2O$).

Processing *Gypsum* Wash clean, dry, break to pieces and eliminate foreign matter, then grind to coarse powder.

Action To remove *heat*, quench *fire*, ease the mind, and relieve thirst.

Indications Febrile diseases due to exogenous pathogenic factors with high fever and dire thirst; asthma and cough caused by *heat* in the lung; headache and toothache caused by exuberant *fire* in the stomach.

Usage and dosage 15-60 g, decocted first.

Storage Preserve in a dry place.

Gypsum Fibrosum Praeparatum (煅石膏, Duanshigao)

Calcined Gypsum

Calcined Gypsum is the processed product of Gypsum.

Processing Calcine the clean Gypsum as described under the method for calcining openly (Appendix Ⅱ D) to porous.

Description White powder or porous masses, showing slightly red lustre on surface, opaque. Texture soft and relatively light, easily broken, powdered in kneading. Odour less; taste, weak.

Heavy metals Carry out the method as described under Gypsum Fibrosum, not more than 10 ppm.

Assay Weigh accurately 0.15 g of the fine powder, carry out the test method as described under Gypsum Fibrosum, begining at "to a conical flask, add 10ml of dilute hydrochloric acid TS". Each ml of disodium edetate (0.05mol/L) VS is equivalent to 6.807 mg of $CaSO_4$.
It contains not less than 92 per cent of calcium sulfate [1 g of calcium sulfate ($CaSO_4$) is equivalent to 1.26 g of hydrous calcium sulfate ($CaSO_4 \cdot 2H_2O$)].

Action To expel *dampness*, promote growth of fissues, curing sores, to arrest bleeding.

Indications Chronic ulcer, eczema, itching, and scaldes and unhealed wounds, and traumatic bleeding.

Usage and dosage Ground into powder for external application.

Storage Preserve in a dry place.

Haematitum (赭石, Zheshi)

Hematite

Hematite is a mineral of oxides of corundum group, containing mainly ferric oxide (Fe_2O_3). The drug is collected, removed from foreign matter.

Description Aggregates, fish-egg like, bean-shaped, reniform, frequently in irregular flattened masses. Dark brownish-red or greyish-black; streak cherry-red or reddish-brown, some with lustre of metal. Many rounded bulges occurring on one surface, commonly known as "Ding-tou", and hollows of the same size corresponding in position to "Ding-tou" occurring on the other surface. Texture heavy and hard, fracture showing stratification. Odour, slight; taste, weak.

Identification Place 0.1 g of the powder in a test tube, add 2 ml of hydrochloric acid, shake and allow to stand. To 2 drops of the supernatant, add 2 drops of ammonium thiocyanate TS, a blood-red colour is produced immediately. To another 2 drops of the supernatant, add 1-2 drops of potassium ferrocyanide TS, a blue precipitate is produced, which turns to brown on adding 5-6 drops of 25% sodium hydroxide solution.

Assay Weigh accurately about 0.25 g of the fine powder, carry out the Assay described under Magnetitum. It contains not less than 45.0 per cent of iron (Fe).

Processing *Haematitum* Eliminate foreign matter, break to pieces.

Haematitum (calcined) Calcine the clean Haematitum as described under the method for calcining and quenching (Appendix Ⅱ D) to red thoroughly, quench with vinegar and then grind into coarse powder, using 30 kg of vinegar per 100 kg of Haematitum.

Action To subdue hyperactivity of the liver, relieve vomiting, belching and hiccuping, and arrest bleeding.

Indications Vertigo, tinnitus, vomiting, belching, hiccuping, dyspnea, spitting of blood, epistaxis, abnormal uterine bleeding.

Usage and dosage 9-30 g, decocted first.

Precaution Used with caution in pregnancy.

Halloysitum Rubrum (赤石脂, Chishizhi)

Red Halloysite

Red Halloysite is a mineral of silicates of polyhydrate kaolinite group, containing mainly hydrated aluminium silicate [$Al_4(Si_4O_{10})(OH)_8 \cdot 4H_2O$]. The drug is collected, removed from foreign matter.

Description Aggregates of masses, irregular pieces, pink, red to purplish-red, with patterns alternated with red and white. Texture soft, easily broken. Fracture with waxy lustre, highly hygroscopic. Odour, clay-like; taste, weak, no sandy sensation on chewing.

Processing *Halloysitum Rubrum* Eliminate foreign matter, break or grind to powder.

Halloysitum Rubrum (calcined) To the fine powder add vinegar, stir well and make strips, cut into sections, dry, calcine as described under the method of calcining openly (Appendix Ⅱ D) to red thoroughly. Break to pieces before use.

Action To astringe the intestine, arrest bleeding, and promote growth of new tissues.

Indications Chronic diarrhea, chronic dysentery; hematochezia; abnormal uterine bleeding, leukorrhagia; external use for ulcers difficult to heal, eczema with exudation.

Usage and dosage 9-12 g; appropriate quantity is ground into powder for topical application.

Precaution Incompatible with Cortex Cinnamomi.

Storage Preserve in a dry place, protected from moisture.

Herba Abri
(鸡骨草, Jigucao)

Canton Love-pea Vine

Canton Love-pea Vine is the dried herb of *Abrus cantoniensis* Hance (Fam. Leguminosae). The drug is collected all the year round, removed from soil, and dried.

Description Roots mostly conical, the upper part thick and the lower part thin, branched, varying in length, 0.5-1.5 cm in diameter. Externally greyish-brown, rough, with fine, longitudinal striations, rootlets extremely slender, some fallen off or with remainings; texture hard. Stems caespitose, 50-100 cm long, about 0.2 cm in diameter; greyish-brown to purplish-brown, branchlets slender, sparsely pubescent. Leaves pinnately compound, alternate, leaflets in 8-11 pairs, mostly fallen off, oblong, 0.8-1.2 cm long, apex truncate, mucronulate, the lower surface with pronated hairs. Odour, slightly aromatic; taste, slightly bitter.

Identification (1) Powder: Greyish-green. Non-glandular hairs unicellular, acute or acuminate at the apex, 60-970 μm long, 12-22 μm in diameter, walls 3-6 μm thick, with distinct striations and warty prominences. Stomata paracytic. Fibre bundles surrounded by cells containing prisms of calcium oxalate, forming crystal fibres, walls of crystal cells irregularly thickened. Stone cells subrounded, subsquare or oblong, 16-40 μm in diameter, some with slightly thickened walls. Cork cells yellowish-brown. Prisms of calcium oxalate 5-11 μm in diameter.

(2) To 10 g of the coarse powder add 100 ml of 70% ethanol, heat under reflux on a water bath for 30 minutes and filter. Divide the filtrate into two portions, and evaporate to dryness. Dissolve one portion of the residue in 10 ml of water, filter, to 2 ml of the filtrate add 2 ml of 0.1% solution of ferric chloride in glacial acetic acid, shake well, add 2 ml of sufuric acid slowly along the wall, a reddish-brown colour is produced immediately at the junction of the two layers.

(3) To another portion of the residue obtained under Identification test (2), add 10 ml of 1% hydrochloric acid solution to dissolve and filter. To the residue add 10 ml of 10% sodium hydroxide solution, heat under reflux on a water bath for 30 minutes and allow to cool, transfer the mixture to a separator, extract with 20 ml of ether, separate the ether layer and evaporate to dryness, dissolve the residue in 1 ml of glacial acetic acid, add 1 ml of a mixture containing 19 portions of acetic anhydride and 1 portion of sulfuric acid, a yellow colour is produced and changes gradually to a dull green colour.

Water Not more than 15.0 per cent (Appendix Ⅸ H, method 1).

Total ash Not more than 7.5 per cent (Appendix Ⅸ K).

Acid-insoluble ash Not more than 2.0 per cent (Appendix Ⅸ K).

Extractives Carry out the method for determination of ethanol-soluble extractives (Appendix Ⅹ A, the hot extraction method), using dilute ethanol as the solvent, not less than 6.0 per cent

Processing Eliminate foreign matter and legumes, and cut into sections.

Action To remove toxic *heat*, stagnant relieve the depressed *liver-qi* and alleviate pain.

Indications Jaundice with hypochondriac distress and epigastric distension and pain; acute and chronic hepatitis; mastitis.

Usage and dosage 15-30 g.

Storage Preserve in a dry place.

Herba Agrimoniae
(仙鹤草, Xianhecao)

Hairyvein Agrimonia Herb

Hairyvein Agrimonia Herb is the dried aerial part of *Agrimonia pilosa* Ledeb. (Fam. Rosaceae). The drug is collected in summer and autumn when foliage branch growing luxuriantly, removed from foreign matter, and dried.

Description 50-100 cm long, with white hairs. The lower part of stem cylindrical, 4-6 mm in diameter, reddish-brown, the upper part square, the four sides slightly depressed, greenish-brown, furrowed longitudinally and ridged, nodose; texture light and hard, easily broken, fracture hollowed. Leaves odd-pinnate, alternate, dark green, crumpled and rolled; texture fragile, easily broken; leaflets of two sizes, the small leaflets interposed between the large ones at the leaf axis, the ones at the apex relatively large, when whole, ovate or long-elliptical, acute at the apex, cuneate at the base, margin serrate; stipules 2, amplexicaul, oblique-ovate. Raceme slender, the lower part of calyx tubular, with hooked bristles at the upper part of calyx tube, 5-lobed at the apex, petals yellow. Odour, slight; taste, slightly bitter.

Identification Powder: Dark green. The cells of upper epidermis polygonal and the walls of lower epidermis sinuous, stomata anomocytic or anisocytic. Non-glandular hairs unicellular, varying in length, walls thickened and lignified, with warty prominences, and sparsely with spiral striations. Small glandular hairs composed of an ovoid, 1-4 celled head and a 1-2 celled stalk; a few glandular scales present, composed of an unicellular head, up to 68 μm in diameter, containing volatile oil drops, and an unicellular stalk. Clusters of calcium oxalate fairly abundant, 9-50 μm in diameter.

Processing Remove the remains of roots and foreign matter, wash clean, soften briefly, cut into sections and dry.

Action To arrest bleeding, stop malarial attacks, cure dysentery, and counteract toxicity.

Indications Hemoptysis, hematemesis, abnormal uterine bleeding; malaria; dysentery with bloody stools; overstrain; boils and sores; pudental itching in leukorrhalgia.

Usage and dosage 6-12 g; appropriate quantity for external use.

Storage Preserve in a ventilated and dry place.

Herba Andrographis (穿心莲, Chuanxinlian)

Common Andrographis Herb

Common Andrographis Herb is the dried aerial part of *Andrographis paniculata* (Burm. f.) Nees (Fam. Acanthaceae). The drug is collected in early autumn when foliage branch growing luxuriantly, and dried in the sun.

Description Stems square and frequently branched, 50-70 cm long, nodes slightly swollen; texture fragile, easily broken. Leaves simple, opposite, short petioled or nearly sessile; lamina crumpled and easily broken, when whole, lanceolate or ovate-lanceolate, 3-12 cm long, 2-5 cm wide, with acuminate apex and cuneate-decurrent base, margin entire or undulate; the upper surface green, the lower surface greyish-green, glabrous on both surfaces. Odour, slight; taste, extremely bitter.

Identification (1) Transverse section of leaf: Upper epidermal cells subsquare or rectangular, lower epidermal cells relatively small, both surfaces with crystal cells containing rounded, long-elliptical or clavate cystoliths. Glandular scales and sometimes non-glandular hairs visible. Palisade 1-2 layers of cells, across the upper part of midrib; spongy cells arranged loosely. Vascular bundles of midrib collateral and grooved, crystal cells occurring above the xylem.

Surface view of leaf: Enlarged crystal cells occurring in the upper and lower epidermis, containing large conchoidal cystoliths, up to 36 μm in diameter and 180 μm long, with a hilum-shaped scar in the large end, concentric striations wavy. Stomata more frequent on the lower epidermis, diacytic, sometimes anomocytic, subsidiary cells significantly varying in size. Head of glandular scales oblate, 4,6 (8)-celled, up to 40 μm in diameter, stalk very short. Non-glandular hairs 1-4 celled, up to 160 μm long and 40 μm in diameter, with cuticular striations on the surface.

(2) Use the test solution obtained under the Assay as the test solution. To 0.5 g of Herba Andrographis reference drug add 30 ml of ethanol, ultrasonicate for 30 minutes, filter and concentrate the filtrate to about 5 ml as the reference drug solution. Dissolve dehydroandrographolide CRS and andrographolide CRS in dehydrated ethanol to produce a mixture containing 1 mg of each per ml as the reference solution. Carry out the method for thin layer chromatography (Appendix Ⅵ B), using silica gel GF_{254} mixed with sodium carboxymethylcellulose as the coating substance and a mixture of chloroform, ethyl acetate and methanol (4 : 3 : 0.4) as the mobile phase. Apply separately to the plate 6 μl of each of the test solution and the reference drug solution and 4 μl of the reference solution. After developing and removal of the plate, dry in air, examine under ultraviolet light at 254 nm. The spots in the chromatogram obtained with the test solution correspond in position and colour to the spots obtained with the reference solution and the reference drug solution. Spray with a mixture of 2% solution of 3,5-dinitro-benzoic acid in ethanol and 2 mol/L potassium hydroxide solution (mixed in equal portions before use), examine in daylight immediately. The spots in the chromatogram obtained with the test solution correspond in position and colour to the spots obtained with the reference solution and the reference drug solution.

Leaves Not less than 30 per cent.

Extractives Carry out the method for determination of ethanol-soluble extractives (Appendix Ⅹ A, the hot extraction method), using ethanol as the solvent, not less than 8.0 per cent.

Assay Carry out the method for high performance liquid chromatography (Appendix Ⅵ D).

Chromatographic system and system suitability Use octadecylsilane bonded silica gel as the stationary phase and a mixture of methanol and water (52 : 48) as the mobile phase. As detector a spectrophotometer set at 225 nm for andrographolide and 254 nm for dehydroandrographolide. The number of theoretical plates of the column is not less than 2000, calculated with reference to the peaks of andrographolide and dehydroandrographolide.

Reference solution Dissolve a quantity of andrographolide CRS and dehydroandrographolide CRS, accurately weighed, in methanol to produce two solutions containing 0.1 mg of each per ml.

Test solution Weigh accurately 0.5 g of the powder (through No. 4 sieve), add accurately 25 ml of 40% methanol, weigh, macerate for 1 hour and ultrasonicate (power 250 W, frequency 33 kHz) for 30 minutes, weigh again and compensate the loss of the weight with methanol, mix well and filter. Apply accurately 10 ml of the successive filtrate to a small column (1.5 cm in inner diameter) packed with neutral aluminium oxide (200-300 mesh, 5 g), elute with 15 ml of methanol. Collect the eluate in a 50 ml volumetric flask, dilute with methanol to volume, and mix well.

Procedure Inject accurately 5 μl of each of the test solution and the reference solution, respectively, into the column, and calculate the content.

It contains not less than 0.80 per cent of total amount of andrographolide ($C_{20}H_{30}O_5$) and dehydroandrographolide ($C_{20}H_{28}O_4$), calculated with reference to the dried drug.

Processing Eliminate foreign matter, wash clean, cut into sections and dry.

Action To remove *heat*, counteract toxicity, and reduce swelling.

Indications Influenza with fever, sore throat, ulcers in the mouth or on the tongue; acute or chronic cough; colitis, dysentery; urinary infection with difficult painful urination; carbuncles, sores, venomous snake bite.

Usage and dosage 6-9 g; appropriate quantity for external use.

Storage Preserve in a dry place.

Preparation Common Andrographis Tablets.

Herba Ardisiae Japonicae (矮地茶, Aidicha)

Japanese Ardisia Herb

Japanese Ardisia Herb is the dried herb of *Ardisa*

japonica (Thunb.) Blume (Fam. Myrsinaceae). The drug is collected in summer and autumn when foliage branch growing luxuriantly, removed from soil, and dried.

Description Rhizomes cylindrical, sparsely with rootlets. Stems somewhat flattened-cylindrical, slightly twisted, 10-30 cm long, 0.2-0.5 cm in diameter; externally reddish-brown, with fine longitudinal striations, leaf scars and nodes; texture hard, easily broken. Leaves alternate, gathered at the tip of stems, lamina slightly crumpled or broken, when whole, ellipsoid, 3-7 cm long, 1.5-3 cm wide, greyish-green, dark brown or pale reddish-brown; acute at the apex, cuneate at the base, margin serrulate; texture nearly leathery. Drupe, red and spheroidal, at the apex of stem occasionally. Odour, slight; taste, slightly astringent.

Identification (1) Transverse section of stem: The walls of epidermal cells thickened, with glandular hairs; cork visible in old stems. Cortex relatively broad, several layers of collenchymatous cells occurring in the outer part of cortex; some cells containing prisms of calcium oxalate; and with secretory cavities. Endodermis distinct. Phloem fairly narrow, a few of fibres at the outside of phloem. Cambium indistinct. Cells of xylem lignified, vessels arranged in single row. Pith relatively large, with secretory cavities. Parenchymatous cells containing prisms of calcium oxalate and starch granules, some containing brown masses.
Surface view of leaf: The anticlinal walls of epidermal cells sinuous; stomata anisocytic, and anomocytic occasionally. Glandular scales with a head consisting of 8-10 cells and an unicellular stalk.
Powder: Dark brown. Spiral vessels relatively frequent, 7.5-25 μm in diameter. Secretory cavities mostly broken, some cavities containing yellowish-brown secretory contents, and some secretory cells containing brown contents. Fibres thick-walled. Prisms of calcium oxalate 7.5-26 μm in diameter. Glandular hairs with a 2-celled head and an unicellular stalk. Stomata anisocytic. Brown masses visible. Starch granules ovate-rounded or rounded, 3.8-23 μm in diameter, hilum dotted or cleft; compound granules consisting of 2-3 components.
(2) To 0.2 g of the powder add 20 ml of methanol, ultrasonicate for 30 minutes, cool, and filter. Concentrate the filtrate to 1 ml as the test solution. Dissolve bergenin CRS in methanol to produce a solution containing 0.5 mg per ml as the reference solution. Carry out the method for thin layer chromatography (Appendix Ⅵ B), using silica gel G as the coating substance and a mixture of chloroform, ethyl acetate, and methanol (5 : 4 : 2) as the mobile phase. Apply separately to the plate 3 μl of each of the above two solutions. After developing and removal of the plate, dry in air. Spray with a mixture of 1% ferric chloride solution and 1% potassium ferricyanide solution (1 : 1). The spot in the chromatogram obtained with the test solution corresponds in position and colour to the spot in the chromatogram obtained with the reference solution.

Water Not more than 13.0 per cent (Appendix Ⅸ H, method 1).

Total ash Not more than 8.0 per cent (Appendix Ⅸ K).

Acid-insoluble ash Not more than 2.0 per cent (Appendix Ⅸ K).

Assay Carry out the method for high performance liquid chromatography (Appendix Ⅵ D).

Chromatographic system and system suitability Use octadecylsilane bonded silica gel as the stationary phase and a mixture of methanol and water (20 : 80) as the mobile phase. As detector a spectrophotometer set at 275 nm. The number of theoretical plates of the column is not less than 1500, calculated with reference to the peak of bergenin.

Reference solution Dissolve a quantity of bergenin CRS, accurately weighed, in methanol to produce a solution containing 50 μg of bergenin per ml.

Test solution Weigh accurately 0.2 g of the coarse powder in a conical flask. Add accurately 20 ml of methanol, weigh, ultrasonicate (power 200 W, frequency 40 kHz) for 40 minutes, cool, weigh again, replenish the loss of the weight with methanol, mix well and filter.

Procedure Inject accurately 5 μl of each of the reference solution and the test solution, respectively, into the column, and calculate the content.
It contains not less than 0.50 per cent of bergenin ($C_{14}H_{16}O_9$), calculated with reference to the dried drug.

Processing Eliminate foreign matter, wash clean, take out, stand and remove from water, cut into sections, and dry.

Action To resolve phlegm and relieve cough, remove dampness and promote blood circulation.

Indications Acute and chronic cough, bloody phlegm, jaundice due to *damp-heat*, and traumatic injuries.

Usage and dosage 15-30 g.

Storage Preserve in a cool and dry place.

Herba Aristolochiae (天仙藤, Tianxianteng)

Dutchmanspipe Vine

Dutchmanspipe Vine is the dried aerial part of *Aristolochia debilis* Sieb. et Zucc. or *Aristolochia contorta* Bge. (Fam. Aristolochiaceae). The drug is collected in autumn, removed from foreign matter, and dried in the sun.

Description Stems slenderly cylindrical, slightly twisted, 1-3 mm in diameter; externally yellowish-green or pale yellowish-brown, with longitudinal ridges and nodes, internodes varying in length; texture fragile, easily broken, fracture exhibiting several vascular bundles of variable size. Leaves alternate, mostly crumpled and broken, when whole, deltoid-narrow-ovate or deltoid-broad-ovate, and cordate at the base; dark green or pale yellowish-brown; basal ones obviously veined, slenderly petioled. Odour, delicately aromatic; taste, weak.

Identification Transverse section of stem: Epidermal cells subsquare, covered with cuticle. Cortex relatively narrow. Pericyclic fibres with 6-10 and more layers, connected in a ring, walls thickened outside and thinned gradually in the inner part. Vascular bundles, several in variable size. Cambium in a ring. Vessels subrounded, 10-170 μm in diameter. Medullated.

Processing Eliminate foreign matter, cut into sections.

Action To promote the flow of *qi* and blood, and induce urination.

Indications Pricking pain in the epigastrium; arthralgia; edema of pregnancy.

Usage and dosage 4.5-9 g.

Storage Preserve in a dry place, protected from mould.

Herba Artemisiae Annuae (青蒿, Qinghao)

Sweet Wormwood Herb

Sweet Wormwood Herb is the dried aerial part of *Artemisia annua* L. (Fam. Compositae). The drug is collected in autumn at flowering, removed from older stem, and dried in the shade.

Description Stems cylindrical, frequently branched at the upper part, 30-80 cm long, 2-6 mm in diameter; externally yellowish-green or brownish-yellow, with longitudinal ridges; texture slightly hard, easily broken, fracture medullated in the centre. Leaves alternate, dark green or brownish-green, rolled and crumpled, easily broken, when whole, 3-pinnatipartite, the segments and smaller segments oblong or long-elliptical, pubescent on both surfaces. Odour, characteristically aromatic; taste, slightly bitter.

Identification To 3 g of the powder add 50 ml of petroleum ether (60-90℃), heat under reflux for 1 hour, filter, evaporate the filtrate to dryness, dissolve the residue in 30 ml of *n*-hexane. Extract with three 10-ml quantities of 20% acetonitrile solution, evaporate the combined extracts to dryness. Dissolve the residue in 0.5 ml of ethanol as the test solution. Dissolve artemisinin CRS in ethanol to produce a solution containing 1 mg per ml as the reference solution. Carry out the method for thin layer chromatography (Appendix Ⅵ B), using silica gel G as the coating substance and a mixture of petroleum ether (60-90℃) and ether (3 : 2) as the mobile phase. Apply separately to the plate 5 μl of each of the above two solutions. After developing and removal of the plate, dry in air. Spray with a 10% solution of sulfuric acid in ethanol, heat at 105℃ to the spots clear. Examine under ultraviolet light at 365 nm. The fluorescent spot in the chromatogram obtained with the test solution corresponds in position and colour to the spot in the chromatogram obtained with the reference solution.

Water Not more than 14.0 per cent (Appendix Ⅸ H, method 1).

Tatal ash Not more than 8.0 per cent (Appendix Ⅸ K).

Acid-insoluble ash Not more than 1.0 per cent (Appendix Ⅸ K).

Extractives Carry out the method for determination of ethanol-soluble extractives (Appendix Ⅹ A, the cold maceration method), using anhydrous ethanol as the solvent, not less than 1.9 per cent.

Processing Eliminate foreign matter, spray with water, soften briefly, cut into sections, and dry in the sun.

Action To remove summer-heat, relieve consumptive fever, and stop malarial attacks.

Indications Fever caused by summer-heat; afternoon fever in deficiency *of yin* or in consumptive diseases; malaria with chills and fever; jaundice.

Usage and dosage 6-12 g, added to the decoction when it is nearly done.

Storage Preserve in a cool and dry place.

Herba Artemisiae Scopariae (茵陈, Yinchen)

Virgate Wormwood Herb

Virgate Wormwood Herb is the dried aerial part of *Artemisia scoparia* Waldst. et Kit. or *Artemisia capillaris* Thunb. (Fam. Compositae). The drug is collected in spring when the seedling is 6-10 cm high, or in autumn when the bud is forming, removed from foreign matter and older stem, and dried in the sun. The drug collected in spring is known as "Mianyinchen" and that collected in autumn is known as "Yinchenhao".

Description *Mianyinchen* Mostly rolled into masses, greyish-white, or greyish-green, densely covered with white pubescences throughout, soft like a nap. Stems thin and small, 1.5-2.5 cm long, 1-2 mm in diameter, longitudinal striations distinct after removing the white pubescences on the surface; texture fragile, easily broken. Leaves petioled, when whole, 1-3 pinnatipartisect, lamina 1-3 cm long, about 1 cm wide; segments ovoid or slightly oblanceolate, stripe-shaped, apex acute. Odour, delicately aromatic; taste, slightly bitter.

Yinchenhao Stems cylindrical, frequently branched, 30-100 cm long, 2-8 mm in diameter; externally pale purple or purple, striated longitudinally, pubescent; texture light, fragile, fracture almost white. Leaves densely gathered, or mostly fallen off. Basal leaves 2-3 pinnatipartite, segments stripe-shaped or finely stripe-shaped, densely covered with white pubescences on both surfaces; cauline leaves 1-2 pinnatipartisect, amplexicaul at the base, segments filamentous; capitulum ovoid, mostly gathered in conical, 1.2-1.5 mm long, 1-1.2 mm in diameter, short petioled; involucres 3-4 layers, ovoid, bracts 3-lobed; the outer female flowers 6-10, some times up to 15, the inner bisexual flowers 2-10; achenes oblong, yellowish-brown. Odour, aromatic; taste, slightly bitter.

Processing Eliminate remains of roots and foreign matter, rub or cut into pieces. For Mianyinchen, sift to remove dust.

Action To remove *damp-heat* and relieve jaundice.

Indications Infectious icteric hepatitis; sores with exudation and itching.

Usage and dosage 6-15 g; for external use, a decoction is made for fumigation and washing.

Storage Preserve in a cool and dry place, protected from moisture.

Herba Belladonnae (颠茄草, Dianqiecao)

Belladonna Herb

Belladonna Herb is the dried herb of *Atropa belladonna* L. (Fam. Solanaceae). The drug is collected from flowering to fruiting, removed from thick stem and soil, cut into section, and dried.

Description Roots cylindrical, 5-15 mm in diameter, externally pale greyish-brown, with longitudinal wrinkles; old roots ligneous, rootlets easily broken, fracture even,

bark narrow, greyish-white, wood broad, brownish-yellow, cambium ring obvious. Pith white. Stems flattened-cylindrical, 3-6 mm in diameter, externally yellowish-green, with fine longitudinal wrinkles and fine dotted leniticels sparsely, hollowed, young stems pubescent. Leaves often crumpled and broken, when whole, ovate-elliptical, yellowish-green to dark brown. Calyx with five lobes, corolla campanulate. Fruits spheroidal, 5-8 mm in diameter, with long stalk and numerous seeds. Odour, slight; taste, slightly bitter and pungent.

Identification (1) Powder: Pale green or pale brownish-green. Sandy crystals of calcium oxalate numerous, 3-10 μm in diameter, some sandy crystal cells containing cluster of crystals, 15-28 μm in diameter. Leaf epidermal cells with sinuous anticlinal walls and striated cuticle; stomata anisocytic. Glandular hairs, with an unicellular head and a 2-4 celled stalk, or with a 5-6 celled head and an unicellular stalk. Starch granules abundant, subrounded, cucullate or polygonal, 8-26 μm in diameter, hilum pointed or cleft, with distinct striations in large granules. Bordered pitted and reticulate vessels, 24-40 μm in diameter. Wood fibres, sinuous stone cells of testa and pollen grains visible.
(2) To 4 g of the powder add 15 ml of ethanol, shake for 15 minutes and filter. Evaporate the filtrate to dryness, add 2 ml of sulfuric acid solution (1→100), filter after stirring. Make the filtrate alkaline with ammonia TS, then extract with 2 ml of chloroform, separate the chloroform solution and evaporate to dryness. The residue yields the characteristic reactions of tropane alkaloids (Appendix Ⅳ).
(3) To 2 g of the powder add 2 ml of concentrated ammonia TS, mix well, add 25 ml of chloroform, shake well, allow to stand overnight and filter. Evaporate the filtrate to dryness, dissolve the residue in 0.5 ml of chloroform as the test solution. Dissolve atropine sulfate CRS and scopolamine hydrobromide CRS in methanol to produce a mixture containing 4 mg of each per ml as the reference solution. Carry out the method for thin layer chromatography (Appendix Ⅵ B), using silica gel G as the coating substance and a mixture of ethyl acetate, methanol and concentrated ammonia TS (17 : 2 : 1) as the mobile phase. Apply separately to the plate 10 μl of each of the test solution and the reference solution. After developing and removal of the plate, dry in air. Spray with dilute potassium iodobismuthate TS. The spots in the chromatogram obtained with the test solution correspond in position and colour to the spots in the chromatogram obtained with the reference solution.

Foreign matter Not more than 4 per cent of leaves with abnormal colour (yellow, brown or almost black); not more than 3 per cent of stems with a diameter exceeding 1 cm (Appendix Ⅸ A).

Water Not more than 13.0 per cent (Appendix Ⅸ H, method 1).

Assay Place about 10 g of moderately coarse powder, accurately weighed, in a Soxhlet's extractor, add a quantity of a mixture of 10 ml of ethanol, 8 ml of concentrated ammonia TS and 20 ml of ether, and allow to stand for 12 hours. Heat under reflux with 70 ml of ether for 3 hours until complete extraction of the alkaloids is effected. Evaporate the extract to remove most of ether on a water bath, transfer to a separator and extract the solution with several 10-ml portions of sulfuric acid solution (0.5 mol/L), until complete extraction of the alkaloids is effected. Combine the acid solutions and extract with several 10-ml portions of chloroform, until the chloroform layer is colourless. Combine the chloroform solutions, and extract with 10 ml of sulfuric acid solution (0.5 mol/L). Discard the chloroform solution, combine the above acid solutions, filter, wash the filter with sulfuric acid solution (0.5 mol/L). Combine washings and filtrate, make the solution alkaline by adding excess of concentrated ammonia TS, and extract rapidly with several quantities of chloroform, until complete extraction of the alkaloids is effected. If emulsification is produced, several drops of ethanol may be added. Wash the chloroform solutions consequently with the same portion of 10 ml of water, and discard the washings. Combine the chloroform solutions, evaporate to dryness on a water bath, add 3 ml of ethanol, evaporate to dryness again and dry at 80℃ for 2 hours. Add 2 ml of chloroform to the residue, and dissolve the residue by gentle heating if necessary. Add accurately 20 ml of sulfuric acid (0.01 mol/L) VS, heat on a water bath to remove chloroform, allow to cool, add 1-2 drops of methyl red IS and titrate with sodium hydroxide (0.02 mol/L) VS. Each ml of sulfuric acid (0.01 mol/L) VS is equivalent to 5.788 mg of hyoscyamine ($C_{17}H_{23}NO_3$).
It contains not less than 0.30 per cent of total alkaloids, calculated as hyoscyamine ($C_{17}H_{23}NO_3$), with reference to the dried drug

Action Anticholinergics.

Storage Preserve in a dry place.

Preparation (1) Belladonna Extract
(2) Belladonna Liquid Extract
(3) Belladonna Tincture

Herba Centellae
(积雪草, Jixuecao)

Asiatic Pennywort Herb

Asiatic Pennywort Herb is the dried herb of *Centella asiatica* (L.) Urb. (Fam. Umbelliferae). The drug is collected in summer and autumn, removed from soil, and dried in the sun.

Description Frequently crumpled into masses. Roots cylindrical, 2-4 cm long, 1-1.5 mm in diameter, externally pale yellow or greyish-yellow. Stems slender and curved, yellowish-brown, finely striated longitudinally, frequently with fibrous roots on the nodes. Leaves mostly crumpled and broken, when whole, subrounded or reniform, 1-4 cm in diameter, greyish-green, margin roughly crenate; petioles 3-6 cm long, twisted. Umbels axillary, small. Cremocarps oblate, with distinctly prominent, longitudinal ridges and fine reticulate striations, fruit stalks very short. Odour, slight; taste, weak.

Identification (1) Transverse section of stem: Epidermal cells subround or subsquare, occurring 2-4 layers of collenchymatous cells beneath. Collateral vascular bundles 6-7; slightly lignified fibre groups occurring in the outside of phloem. Fascicular cambium of 2-3 layers of small cells; xylem vessels radically arranged. Pith large. Secretory canals observed in cortex and rays, 23-24 μm in diameter, composed of 5-7 secretory cells.
Surface view of leaf: Upper and lower epidermal cells polygonal, stomata anomocytic or anisocytic, more frequently observed on the lower epidermis.
(2) Heat under reflux 1 g of the powder with 25 ml of ethanol for 30 minutes, filter, evaporate the filtrate to dryness. Dissolve the residue in 20 ml of water, extract with two 15-ml quantities of *n*-butanol saturated with water by shaking, combine the *n*-butanol extracts, wash with 15 ml of water saturated with *n*-butanol, discard the water solution, and evaporate the *n*-butanol solution to dryness.

Dissolve the residue in 1 ml of methanol as the test solution. Dissolve a quantity of asiaticoside CRS in methanol to produce a solution containing 1 mg per ml as the reference solution. Carry out the method for thin layer chromatography (Appendix Ⅵ B), using silica gel G as the coating substance and a mixture of chloroform, methanol and water (7 : 3 : 0.5) as the mobile phase. Apply separately to the plate 5 μl of each of the above two solutions. After developing and removal of the plate, dry in air. Spray with 10% sulfuric acid in ethanol, heat at 105℃ to the spots clear. The spot in the chromatogram obtained with the test solution corresponds in position and colour to the spot in the chromatogram obtained with the reference solution.

Water Not more than 12.0 per cent (Appendix Ⅸ H, method 1).

Tatal ash Not more than 13.0 per cent (Appendix Ⅸ K).

Acid-insoluble ash Not more than 3.5 per cent (Appendix Ⅸ K).

Extractives Carry out the method for determination of ethanol-soluble extractives (Appendix Ⅹ A, the hot extraction method), using dilute ethanol TS as the solvent, not less than 25.0 per cent.

Processing Eliminate foreign matter, wash clean, cut into sections, and dry in the sun.

Action To remove *heat* and *dampness*, to counteract *toxicity*, and reduce swelling.

Indications Jaundice caused by *damp-heat*; heat-stroke with diarrhea; urolithiasis and hematuria; carbuncles and boils, traumatic injuries.

Usage and dosage 15-30 g; or 30-60 g of the fresh herb.

Storage Preserve in a dry place.

Herba Centipedae (鹅不食草, Ebushicao)

Small Centipeda Herb

Small Centipeda Herb is the dried herb of *Centipeda minima* (L.) A. Br. et Aschers. (Fam. Compositae). The drug is collected at flowering in summer and autumn, removed from soil, and dried in the sun.

Description Tangled into masses. Rootlets fine, pale yellow. Stems slender, frequently branched; texture fragile, easily broken, fracture yellowish-white. Leaves small, nearly sessile; lamina mostly crumpled and broken, when whole, spatulate, externally greyish-green or brown, margin 3-5 dentate. Capitulum yellow or yellowish-brown. Odour, slightly aromatic, irritant on smelling longer; taste, bitter, slightly pungent.

Identification Powder: Greyish-green to greyish-brown. Epidermal cells of stem rectangular or subpolygonal, walls slightly thickened, with indistinct cuticular striations on the surface, stomata visible. Epidermal cells of leaf subpolygonal, anticlinal walls thin and sinuous in surface view, stomata anomocytic, subsidiary cells 4-6. Glandular hairs paramecium-like in surface view, cells arranged in pairs, containing yellow contents. Epidermal cells of corolla yellow, rectangular or subpolygonal in surface view, projected to be tomentellate with cuticular striations on the surface. Non-glandular hairs on the epidermis of corolla biseriate, one unicellular, slightly short, the other bicellular, the base cell slightly short, hooked or rolled at the apex and with fine cuticular striations on the surface of 2/3 of upper part. Pollen grains pale yellow, subrounded, 15-22 μm in diameter, with 3 germinal furrows, exine spiny.

Total ash Not more than 17.0 per cent (Appendix Ⅸ K).

Processing Eliminate foreign matter, cut into sections and dry.

Action To relieve nasal obstruction and cough.

Indications Headache, cough, expectoration and nasal obstruction in colds; sinusitis with nasal discharge.

Usage and dosage 6-9 g; appropriate quantity for external use.

Storage Preserve in a ventilated and dry place.

Herba Cichorii Radix Cichorii (菊苣, Juju)

Chicory herb; Chicory root

Chicory Herb and Chicory Root is the aerial part or root of *Cichorium glandulosum* Boiss. et Hoet or *Cichorium intybus* L. (Fam. Compositae), habitually used by the Uygur nationality. Chicory Herb is collected in summer and autumn; Chicory Root is collected in later autumn, removed from soil and foreign matter, and dried in the sun.

Description *Herb of Cichorium glandulosum* Stems cylindrical, slightly curved, externally greyish-green or purplish, with longitudinal ridges, pubescent or setaceous; fracture yellowish-white, hollowed. Leaves mostly broken, greyish-green, pubescent on both surfaces; intact leaves at the middle part of stem oblong, sessile, half amplexicaul, become smaller gradually upwards, amplexicaul in ear shape, margin spiny. Capitulum 5-13 arranged into short raceme. Involucre campanulate, 5-6 mm in diameter; bracts 2 layers, outer layer slightly short or nearly equal in length, pubescent; ligulate florets blue. Achenes obovate, with ridges and sinuous striations, apex truncate, covered with scaly aigrets, 0.8-1 mm long, brown or dark brown, with densely distributed dark brown spots. Odour, slight; taste, salty and slightly bitter.

Root of Cichorium glandulosum Main roots conical, with branched roots and numerous rootlets, 10-20 cm long, 0.5-1.5 cm in diameter, externally brownish-yellow, with fine irregular longitudinal wrinkles. Texture hard, uneasily broken; fracture yellowish-white at the outside, almost white in the centre, sometimes hollowed. Odour, slight; taste, bitter.

Herb of Cichorium intybus Stems nearly glabrous. Cauline leaves sparse, oblong-lanceolate. Capitulum sparse, clustered; the outer bracts shorter than the inners, glabrous or sparsely pubescent at the apex. Achenes scaly, aigrets short, 0.2-0.3 mm long.

Root of Cichorium intybus Sometimes 2-3 branched at the upper part, externally greyish-brown to brown, rough, with deep longitudinal striations, outer bark often fallen off, showing brown to dark brown inside. Branch roots and rootlets seldom. Flexible on chewing.

Identification (1) Transverse section of stem:

Cichorium glandulosum Epidermis sometimes with polycellular glandular hairs. Collenchymatous cells occurring under

epidermis at the ridges, with yellowish-brown contents; Casparian dots on endodermis distinct, pericycle fibres underdeveloped, vascular bundles collateral, about 20-25, cambium distinct; vessels subround, scattered singly or several arranged in rings, 8-50 μm in diameter.

Cichorium intybus Pericycle fibres relatively developed, vessels several or ten and more grouped, and arranged in rings interruptedly.

Transverse section of root:

Cichorium glandulosum Cork consisting of 2-3 layers of cells, brownish-yellow; phloem ray in single row; cambium distinct, xylem vessels scattered or 2-6 radically arranged, xylem rays 1-6 cells wide, thin-walled, pits distinct.

Cichorium intybus Cortex narrow; about half of the transverse section occupied by xylem.

(2) Ultrasonicate 1 g of the powder with 30 ml of petroleum ether (60-90℃) for 30 minutes, filter, remain the residue for the next test and evaporate the filtrate to dryness, dissolve the residue in 1 ml of a mixture of ethyl acetate and methanol (1 : 1) as the test solution. Prepare a solution with 1 g of Herba Cichorii or Radix Cichorii reference drug in the same manner as the reference drug solution. Carry out the method for thin layer chromatography (Appendix Ⅵ B), using silica gel G as the coating substance and a mixture of petroleum ether (60-90℃) and dichloromethane (1 : 4) as the mobile phase. Apply separately to the plate 10 μl of each of the above two solutions. After developing and removal of the plate, dry in air. Spray with 10% sulfuric acid in ethanol, heat at 105℃ to the spots clear. The spots in the chromatogram obtained with the test solution correspond in position and colour to the spots in the chromatogram obtained with the reference drug solution.

(3) Ultrasonicate the drug residue obtained under Identification (2), removed of petroleum ether, with 30 ml of ethyl acetate for 30 minutes, filter. Evaporate the filtrate to dryness, dissolve the residue in 1 ml of a mixture of ethyl acetate and methanol (1 : 2) as the test solution. Prepare a solution with 1 g of Herba Cichorii or Radix Cichorii reference drug in the same manner as the reference drug solution. Carry out the method for thin layer chromatography (Appendix Ⅵ B), using silica gel GF_{254} as the coating substance and a mixture of dichloromethane and methanol (9 : 1) as the mobile phase. Apply separately to the plate 10 μl of each of the above two solutions. After developing and removal of the plate, dry in air. Examine under ultraviolet light at 254 nm. The spots in the chromatogram obtained with the test solution correspond in position and colour to the spots in the chromatogram obtained with the reference drug solution. Then spray with 10% sulfuric acid in ethanol, heat at 105℃ to the spots clear, the spots showing same colour.

Water Not more than 10.0 per cent (Appendix Ⅸ H, method 1).

Total ash Not more than 10.0 per cent (Appendix Ⅸ K).

Acid-insoluble ash Not more than 1.0 per cent (Appendix Ⅸ K).

Extractives Carry out the method for determination of ethanol-soluble extractives (Appendix Ⅹ A, the hot extraction method), using 55% ethanol as the solvent, not less than 10.0 per cent.

Processing Eliminate foreign matter, and cut into sections.

Action To remove *heat* from the liver, stimulate bile secretion, promote digestion and whet appetite, and cause diuresis.

Indications Jaundice caused by *damp-heat*; epigastric pain with impairment of appetite; edema with oliguria.

Usage and dosage 9-18 g.

Storage Preserve in a cool and dry place.

Herba Cirsii
(小蓟, Xiaoji)

Field Thistle Herb

Field Thistle Herb is the dried aerial part of *Cirsium setosum* (Willd.) MB. (Fam. Compositae). The drug is collected in summer and autumn at flowering, removed from foreign matter, and dried in the sun.

Description Stems cylindrical, sometimes branched at the upper part, 5-30 cm long, 2-5 mm in diameter; externally greyish-green or purplish, with longitudinal ridges and white pubescences; texture fragile, easily broken, fracture hollowed. Leaves alternate, sessile or short petioled; lamina crumpled or broken, when whole, long-elliptical or oblong-lanceolate, 3-12 cm long, 0.5-3 cm wide; margin entire or serrulate to pinnatipartite, the tips of serrations spinescent; the upper surface greenish-brown and the lower surface greyish-green, white-pubescent on both surfaces. Capitulum solitary or several terminal, involucres campanulate, bracts 5-8 layers, yellowish-green; flowers purplish-red. Odour, slight; taste, slightly bitter.

Identification (1) Surface view of leaf: The upper epidermal cells polygonal, with straight anticlinal walls and markedly striated cuticle; the lower epidermal cells with sinuous walls; stomata and non-glandular hairs occurring on both surfaces. Stomata anomocytic or anisocytic. Non-glandular hairs 3-10 or more celled, with a slender whip-shaped apical cell, shrunken and twisted. Mesophyll cells containing crystals of calcium oxalate, mostly raphides.

(2) To 1 g of the powder add 10 ml of methanol, ultrasonicate for 30 minutes, and filter. Evaporate the filtrate to dryness, and dissolve the residue in 2 ml of methanol as the test solution. Prepare a solution with 1 g of Herba Cirsii reference drug in the same manner as the reference drug solution. Dissolve rutin CRS in methanol to produce a solution containing 0.5 mg per ml as the reference solution. Carry out the method for thin layer chromatography (Appendix Ⅵ B), using polyamide as the coating substance and a mixture of ethyl acetone, butanone, ethanol, and water (1 : 3 : 3 : 13) as the mobile phase, Apply separately to the film 2 μl of each of the above three solutions. After developing and removal of the film, dry in air. Spray with aluminium trichloride TS, and examine under ultraviolet light at 365 nm. The fluorescent spots in the chromatogram obtained with the test solution correspond in position and colour to the spots in the chromatograms obtained with the reference drug solution and the reference solution.

Foreign matter Not more than 2 per cent (Appendix Ⅹ A).

Water Not more than 12.0 per cent. (Appendix Ⅸ H, method 1).

Extractives Carry out the method for determination of ethanol-soluble extractives (Appendix Ⅹ A, the hot extraction method), using dilute ethanol TS as the solvent, not less than 19.0 per cent.

Processing *Herba Cirsii* Eliminate foreign matter, wash clean, soften briefly, cut into sections and dry.

Herba Cirsii (*carbonized*) Stir-bake the sections of *Herba Cirsii* as described under the method for carbonizing by stir-baking (Appendix Ⅱ D) until it becomes blackish-brown.

Action To arrest bleeding by reducing *heat* in blood, and remove blood stasis and reduce swelling.

Indications Epistaxis, spitting of blood, hematuria, hematochezia, abnormal uterine bleeding, traumatic bleeding; carbuncles and sores.

Usage and dosage 4.5-9 g; appropriate quantity of the fresh herb pounded for topical application.

Storage Preserve in a ventilated and dry place.

Herba Cirsii Japonici (大蓟, Daji)

Japanese Thistle Herb

Japanese Thistle Herb is the dried aerial part of *Cirsium japonicum* DC. (Fam. Compositae). The drug is collected at flowering in summer and autumn, removed from foreign matter, and dried in the sun.

Description Stems cylindrical, base up to 1.2 cm in diameter; externally greenish-brown or dark brown, with several longitudinal ridges and filamentous hairs; fracture greyish-white, pith lax or hollowed. Leaves crumpled, mostly broken, when whole, lamina oblanceolate or obovate-elliptical, pinnatipartite, margin with unequal spines; the upper surface greyish-green or yellowish-brown and the lower surface lighter in colour, with greyish-white filamentous hairs on both surfaces. Capitulum terminal, globose or elliptical, involucre yellowish-brown, feathery pappus greyish-white. Odour, slight; taste, weak.

Identification (1) Surface view of leaf: The upper epidermal cells polygonal; the lower epidermal cells subrectangular, anticlinal walls sinuous. Stomata anomocytic or anisocytic, subsidiary cells 3-5. Non-glandular hairs 4-18 celled, the apical cells slender and twisted, about 7 μm in diameter, walls with crisscross striated cuticle.
(2) To 1 g of the powder add 10 ml of methanol, ultrasonicate for 30 minutes, and filter. Evaporate the filtrate to dryness, and dissolve the residue in 2 ml of methanol as the test solution. Prepare a solution with 1 g of Herba Cirsii Japonici reference drug in the same manner as the reference drug solution. Carry out the method for thin layer chromatography (Appendix Ⅵ B), using polyamide as the coating substance and a mixture of acetyl acetone, butanone, ethanol and water (1∶3∶3∶13) as the mobile phase. Apply separately to the film 1-2 μl of each of the above two solutions. After developing and removal of the film, dry in air. Spray with aluminium trichloride TS, and dry in air. Examine under ultraviolet light at 365 nm. The main fluorescent spots in the chromatogram obtained with the test solution correspond in position and colour to the spots in the chromatogram obtained with the reference drug solution.

Foreign matter Not more than 2 per cent. (Appendix Ⅸ A).

Water Not more than 13.0 per cent (Appendix Ⅸ H, method 1).

Extractives Carry out the method for determination of ethanol-soluble extractives (Appendix Ⅹ A, the hot extraction method), using dilute ethanol TS as the solvent, not less than 15.0 per cent

Assay Carry out the method for high performance liquid chromatography (Appendix Ⅵ D).

Chromatographic system and system suitability Use octadecylsilane bonded silica gel as the stationary phase and a mixture of acetonitrile and 0.1% phosphoric acid solution (21∶79) as the mobile phase. As detector a spectrophotometer set at 330 nm. The number of theoretical plates of the column is not less than 3000, calculated with reference to the peak of pectolinarin.

Reference solution Dissolve a quantity of pectolinarin CRS, accurately weighed, in 70% ethanol to produce a solution containing 55 μg of pectolinarin per ml as the reference solution.

Test solution Weigh accurately 0.5 g of the coarse powder (through No. 3 sieve) in a conical flask. Add accurately 100 ml of 70% ethanol, weigh, heat under reflux on a water bath for 1 hour, cool, weigh again, replenish the loss of the weight with 70% ethanol, mix well and filter.

Procedure Inject accurately 10 μl of each of the reference solution and the test solution, respectively, into the column, and calculate the content.
It contains not less than 0.20 per cent of pectolinarin ($C_{28}H_{34}O_{15}$), calculated with reference to the dried drug.

Processing Eliminate foreign matter, wash or soften, cut into sections, and dry at a lower temperature.
The sections in 1.5-2 cm, externally greenish-brown, with several longitudinal ridges and filamentous hairs; fracture greyish-white, pith lax or hollowed. Leaves crumpled, mostly broken, margin with unequal spines; with greyish-white filamentous hairs on both surfaces. Capitulum mostly broken. Odour, slight; taste, weak.
Carry out Identification test (2) described as above, showing the same result. Carry out the Water described as above, not more than 13.0 per cent. Carry out the Assay described as above, it contains not less than 0.20 per cent of pectolinarin ($C_{28}H_{34}O_{15}$), calculated with reference to the dried drug.

Action To arrest bleeding by reducing *heat* in blood, remove blood stasis, and reduce swelling.

Indications Epistaxis, spitting of blood, hematuria, hematochezia, abnormal uterine bleeding, traumatic bleeding; carbuncles and sores.

Usage and dosage 9-15 g; appropriate quantity of the fresh herb is pounded into paste and applied topically.

Storage Preserve in a ventilated and dry place.

Herba Cirsii Japonici Carbonisatus (大蓟炭, Dajitan)

Carbonized Japanese Thistle Herb

The drug is the processed Herba Crisii Japonici.

Procedure Carbonize by stir-baking the sections of Herba Cirsii Japonici as described under the method for carbonizing by stir-baking (appendix Ⅱ D) until the surface of the drug becomes charred black.

Description Sections 1.5-2 cm long. Externally black. Texture lax and fragile, fracture brownish-black. Odour, agreeable burnt smelling.

Identification To 2 g of the powder add 30 ml of 70% ethanol, ultrasonicate for 30 minutes, and filter. Evaporate

the filtrate to dryness, and dissolve the residue in 2 ml of 70% ethanol as the test solution. Prepare a solution with 1 g of Herba Cirsii Japonici reference drug and 10 ml of 70% ethanol in the same manner as the reference drug solution. Carry out the method for thin layer chromatography (Appendix Ⅵ B), using polyamide as the coating substance and a mixture of acetone and water (1 : 1) as the mobile phase. Apply separately to the film 1-2 μl of each of the above two solutions. After developing and removal of the film, dry in air. Spray with 0.1% aluminium trichloride in ethanol, and dry in air. Examine under ultraviolet light at 365 nm. The fluorescent spots in the chromatogram obtained with the test solution correspond in position and colour to the spots in the chromatogram obtained with the reference drug solution.

Water Not more than 10.0 per cent (Appendix Ⅸ H, method 1).

Total ash Not more than 15.0 per cent (Appendix Ⅸ K).

Acid-insoluble ash Not more than 4.0 per cent (Appendix Ⅸ K).

Extractives Carry out the method for determination of ethanol-soluble extractives (Appendix Ⅹ A, the hot extraction method), not less than 13.0 per cent.

Indications Epistaxis, hematemesis, hematuria, hemafacia, metrorrhagia, and traumatic bleeding.

Usage and dosage 5-10 g, mostly used in the form of pills or powder.

Storage Preserve in a cool and dry place.

Herba Cissampelotis (亚乎奴, Yahunu)

Common Cissampelos Herb

Common Cissampelos Herb is the dried whole plant of *Cissampelos pareira* L. var. *hirsuta* (Buch. ex DC.) Forman (Fam. Menispermaceae), commonly used by the Dai nationality. The drug is collected in spring and summer, removed from soil, and dried in the sun.

Description Roots flattened-cylindrical, mostly curved, varying in length, about 1 cm in diameter; externally brown or dark brown, with wrinkles and rootlet scars; fracture withered. Stolons cylindrical, nodes slightly swollen, usually bearing root scars or rootlets; externally brown, internodes showing twisted-revolving longitudinal furrows, easily broken, dusting on breaking, fracture with radiate striations, twinning stems slender, branched, externally yellowish-brown tomentose. Leaves alternate, petioled, nearly peltate; lamina mostly crumpled, when whole, cordate-oblate, retuse and mucronulate at the apex, sparsely white pubescent on the upper surface and densely brownish-yellow tomentose on the lower surface. Odour, slight; taste, bitter and slightly sweet.

Identification (1) Powder: Greyish-brown. Starch granules abundant, simple grains rounded, semirounded or polygonal, 2-21 μm in diameter, hilum pointed or cleft; compound granules of 2-4 components. Stone cells numerous, pale yellow, subsquare, elliptical or polygonal, 30-65 μm in diameter; and subfusiform, 80-180 μm long. Bordered pitted vessels 24-140 μm in diameter. Fibres slender, up to 1000 μm long, about 24 μm in diameter, walls thickened and lignified. Prisms of calcium oxalate relatively few, very small. Non-glandular hairs 1-5 celled, 220-1260 μm long. (2) Macerate 5 g of the powder with 40 ml of ethanol for 2 hours and filter. Evaporate about 20 ml of the filtrate to dryness, dissolve the residue in dilute acetic acid, add a quantity of water and transfer to a separator. Make alkaline with ammonia TS and extract with chloroform. Separate the chloroform solution and extract with dilute acetic acid. To 2 ml of the acetic acid solution, add 2 drops of mercuric potassium iodide TS; a reddish-brown precipitate is produced. To another 2 ml of acetic acid solution, add 2 drops of potassium iodobismuthate TS; a reddish-brown precipitate is produced.

Action To reduce swelling and pain, arrest bleeding, and promote the growth of new tissues.

Indications Traumatic swelling, pain and bleeding.

Usage and dosage For traumatic swelling and pain, appropriate quantity of the dried powder is applied topically after mixing with alcohol or egg white; for traumatic bleeding, appropriate quantity of the dried powder is applied externally, 1 time a day.

Storage Preserve in a dry place.

Herba Cistanches (肉苁蓉, Roucongrong)

Desertliving Cistanche

Desertliving Cistanche is the dried fleshy stem with scales of *Cistanche deserticola* Y. C. Ma or *Cistanche tubulosa* (Schrenk) Wight (Fam. Orobanchaceae). The drug is collected before or at emerging in spring, removed from the inflorescences, cut into sections, and dried in the sun.

Description *Herb of Cistanche deserticola* Flattened-cylindrical, slightly curved, 3-15 cm long, 2-8 cm in diameter. Externally dark brown or greyish-brown, densely covered with imbricated fleshy scales, the apex of scales usually broken. Texture heavy, hard and slightly pliable, uneasily broken, fracture dark brown, with brownish dotted vascular bundles, arranged in sinuous rings. Odour, slight; taste, sweet and slightly bitter.

Herb of Cistanche tubulosa Subfusiform, flattened-fusiform, and flattened-cylindrical, slightly curved, 5-25 cm long, 2.5-9 cm in diameter. Externally dark brown. Fracture granular, greyish-brown, scattered with dotted vascular bundles.

Identification To 1 g of the powder add 20 ml of methanol, ultrasonicate for 15 minutes, and filter. Evaporate the filtrate to almost dryness, dissolve the residue in 2 ml of methanol as the test solution. Dissolve echinacoside CRS and verbascoside CRS in methanol to produce solutions containing 1 mg of each per ml as the reference solutions. Carry out the method for thin layer chromatography (Appendix Ⅵ B), using polyamide as the coating substance and a mixture of methanol, acetic acid and water (2 : 1 : 7) as the mobile phase. Apply separately to the film 2 μl of each of the above three solutions. After developing and removal of the film, dry in air. Examine under ultraviolet light at 365 nm. The fluorescent spots in the chromatogram obtained with the test solution correspond in position and colour to the spots in the chromatogram obtained with the reference solutions.

Water Not more than 10.0 per cent (Appendix Ⅸ H, method 1).

Total ash Not more than 8.0 per cent (Appendix Ⅸ K).

Acid-insoluble ash Not more than 1.5 per cent (Appendix Ⅸ K).

Extractives Carry out the method for determination of ethanol-soluble extractives (Appendix Ⅹ A, the cold maceration method), using ethanol as the solvent, not less than 28.0 per cent.

Assay ***Herb of Cistanche deserticola*** Carry out the method for high performance liquid chromatography (Appendix Ⅵ D).

Chromatographic system and system suitability Use octadecylsilane bonded silica gel as the stationary phase and a mixture of acetonitrile, methanol and 1% solution of acetic acid (10 : 15 : 75) as the mobile phase. As detector a spectrophotometer set at 334 nm. The number of theoretical plates of the column is not less than 4000, calculated with reference to the peak of echinacoside.

Reference solution Dissolve a quantity of echinacoside CRS and verbascoside CRS, accurately weighed, in the mobile phase to produce two solutions containing 0.14 mg of echinacoside and 0.10 mg of verbascoside per ml as the reference solutions.

Test solution Weigh accurately 0.5 g of the coarse powder (through No. 4 sieve) in a 50 ml amber volumetric flask. Add accurately 25 ml of the mobile phase, weigh, and macerate for 30 minutes. Ultrasonicate (power 230 W, frequency 35 kHz) for 40 minutes, cool, weigh again, replenish the loss of the weight with the mobile phase, mix well and centrifuge, filter the supernatant with a 0.45 μm film membrane, store the filtrate in an amber flask as the test solution.

Procedure Inject accurately 2-10 μl of the reference solutions and 10-20 μl of the test solution, respectively, into the column, and calculate the content.
It contains not less than 0.30 per cent of the total amount of echinacoside ($C_{35}H_{46}C_{20}$), and verbascoside ($C_{29}H_{36}O_{15}$), calculated with reference to the dried drug.

Herb of Cistanche tubulosa Carry out the method for high performance liquid chromatography (Appendix Ⅵ D).

Chromatographic system and system suitability Use octadecylsilane bonded silica gel as the stationary phase and a mixture of methanol and 1% solution of formic acid (28 : 5 : 71.5) as the mobile phase. As detector a spectrophotometer set at 330 nm. The number of theoretical plates of the column is not less than 3000, calculated with reference to the peak of echinacoside.

Reference solution Dissolve a quantity of echinacoside CRS, accurately weighed, in 60% methanol in an amber volumetric flask to produce a solution containing 0.2 mg of echinacoside per ml as the reference solution.

Test solution Weigh accurately 1 g of the coarse powder (through No. 4 sieve) in a 100 ml amber volumetric flask. Add accurately 50 ml of 50% methanol, stopper well, weigh, and macerate for 30 minutes. Ultrasonicate (power 230 W, frequency 35 kHz, below 50℃) for 50 minutes, cool, weigh again, replenish the loss of the weight with 50% methanol, mix well and filter, and store the filtrate in an amber flask.

Procedure Inject accurately 10 μl of the reference solution and 5-10 μl of the test solution, respectively, into the column, and calculate the content.
It contains not less than 1.0 per cent of echinacoside ($C_{35}H_{46}C_{20}$), calculated with reference to the dried drug.

Processing *Herb of Cistanche deserticola* (*sliced*) Eliminate foreign matter, wash clean, soften thoroughly, cut into thick slices and dry.
Slices irregular, about 3 mm thick. Externally brown or greyish-brown. Sometimes bearing fleshy scales. Cut surface yellowish-brown, greyish-brown or brown, with pale brown or brownish-yellow dotted vascular bundles, arranged irregularly in sinuous rings or scattered in stripes.
Odour, slight; taste, sweet and slightly bitter.
Carry out Identification test described as above, using 1.5 g, showing the same result.

Herb of Cistanche deserticola (*processed with wine*) Stew or steam the slices as described under the method for stewing with wine or steaming with wine (Appendix Ⅱ D) until the wine absorbed entirely.

Herb of Cistanche tubulosa (*sliced*) Eliminate foreign matter, wash clear, soften thoroughly, cut into thick slices and dry.
Slices irregular, about 3 mm thick. Externally brown to dark brown, cut surface scattered with dotted vascular bundles.

Action To reinforce the kidney, replenish *essence* and blood, and induce laxation.

Indications Impotence, infertility; general weakness with aching of the lower back and knees; constipation.

Usage and dosage 6-9 g.

Storage Preserve in a ventilated and dry place, protected from moth.

Herba Clinopodii (断血流, Duanxueliu)

Clinopodium Herb

Clinopodium Herb is the dried aerial part of *Clinopodium polycephalum* (Vaniot) C. Y. Wu et Hsuan or *Clinopodium chinensis* (Benth.) O. Kuntze (Fam. Labiatae). The drug is collected before flowering in summer, removed from soil, and dried in the sun.

Description Stems square, furrowed on four sides, branches opposite, 30-90 cm long, 1.5-4 mm in diameter, the upper part densely covered with greyish-white pubescences, the lower part sparsely pubescent or nearly glabrous, internodes 2-8 cm long, externally greyish-green or greenish-brown; texture fragile, easily broken, fracture uneven, medullated or hollowed in the centre. Leaves opposite, petioled, mostly crumpled and broken, when whole, ovate, 2-5 cm long, 1.5-3.2 cm wide, margin sparsely serrate, the upper surface greenish-brown, the lower surface greyish-green, both surfaces densely covered with white pubescences. Odour, slightly aromatic; taste, astringent and slightly bitter.

Identification (1) Surface view of leaf: Anticlinal walls of epidermal cells sinuous; stomata diacytic; non-glandular hairs slender, numerous, 1-9-celled, up to 1440 μm long, some basal cells expanded, up to 102 μm in diameter, cells of the middle part 10-55 μm in diameter, some cells constricted and with warty prominences on the surface; glandular scales with a 7-11-celled head, up to 60 μm in diameter, and an unicellular, very short stalk; small glandular hairs with an unicellular head, about 20 μm in diameter, and an unicellular stalk.
(2) Heat under reflux 1 g of the powder with 10 ml of methanol for 30 minutes, filter. Evaporate the filtrate to

dryness, dissolve the residue in 10 ml of water. Extract with two 10-ml quantities of ether by shaking, discard the ether solutions. Extract with two 10-ml quantities of *n*-butanol saturated with water by shaking, combine the *n*-butanol extracts, evaporate to dryness, and dissolve the residue in 1 ml of methanol. Apply the solution to a small column (1.0-1.5 cm in inner diameter) packed with neutral aluminium oxide (100-120 mesh, 5 g). Elute with 40 ml of 40% methanol, collect the eluate and evaporate to dryness, dissolve the residue in 1 ml of methanol as the test solution. Dissolve buddlejasaponin Ⅳ b CRS in methanol to produce a solution containing 2 mg per ml as the reference solution. Carry out the method for thin layer chromatography (Appendix Ⅵ B), using silica gel G as the coating substance and a mixture of chloroform, methanol, glacial acetic acid and water (7 : 2.5 : 1 : 0.5) as the mobile phase. Apply separately to the plate 4 μl of each of the above two solutions. After developing and removal of the plate, dry in air. Spray with 10% sulfuric acid in ethanol, heat at 110℃ to the spots clear. A brownish-red spot in the chromatogram obtained with the test solution corresponds in position and colour to the spot in the chromatogram obtained with the reference solution. Examine under ultraviolet light at 365 nm, the spots showing same brownish-red fluorescence.

Water Not more than 10.0 per cent (Appendix Ⅸ H, method 1).

Tatal ash Not more than 10.0 per cent (Appendix Ⅸ K).

Acid-insoluble ash Not more than 1.0 per cent (Appendix Ⅸ K).

Processing Eliminate foreign matter, soften briefly with water, cut into sections, and dry in the sun.

Action To arrest bleeding.

Indications Excessive menstrual blood, hematuria, epistaxis, gingival bleeding, traumatic bleeding; hemorrhage from hysteromyoma.

Usage and dosage 9-15 g; appropriate quantity is ground into powder or the fresh herb is pounded into paste for topical application.

Storage Preserve in a dry place, protected from moisture.

Preparation Clinopodium Tablets.

Herba Commelinae (鸭跖草, Yazhicao)

Common Dayflower Herb

Common Dayflower Herb is the dried aerial part of *Commelina communis* L. (Fam. Commelinaceae). The drug is collected in summer and autumn, and dried in the sun.

Description Up to 60 cm long, yellowish-green or yellowish-white, relatively smooth. Stems with longitudinal ridges, about 2 mm in diameter, frequently branched or with fibrous roots, nodes slightly swollen, internodes 3-9 cm long; texture soft, fracture medullated in the centre. Leaves alternate, frequently crumpled and broken, when whole, lamina ovate-lanceolate or lanceolate, 3-9 cm long, 1-2.5 cm wide; apex acute, margin entire, base decurrent, forming membranous sheath and amplexicaul, veins parallel. Flowers often fallen off, involucre spathe-like, cordate, both sides divided; petals crumpled, blue. Odour, slight; taste, weak.

Identification Surface view of leaf: Non-grandular hairs of two types, both bicellular, one type short conical, 45-60 μm long, walls relatively thick, basal cell about 45 μm in diameter, apical cell short pointed; another type clavate, basal cell 45-60 μm long, walls slightly thick, apical cell relatively long, the apex obtusely rounded, thin-walled, often fallen off. Needle crystals of calcium oxalate abundant, up to 74 μm long.

Processing Eliminate foreign matter, wash clean, cut into sections, and dry in the sun.

Action To remove toxic *heat*, and cause diuresis.

Indications Upper respiratory infection with high fever and sore throat; edema, acute urinary infection with painful difficult urination; carbuncles and boils.

Usage and dosage 15-30 g; 60-90 g of the fresh herb; appropriate quantity for external use.

Storage Preserve in a ventilated and dry place, protected from mould.

Herba Corydalis Bungeanae (苦地丁, Kudiding)

Bunge Corydalis Herb

Bunge Corydalis Herb is the dried herb of *Corydalis bungeana* Turcz. (Fam. Papaveraceae). The drug is collected at flowering and fruiting in summer and autumn, removed from foreign matter, and dried in the sun.

Description Crumpled to masses, 10-30 cm long. Main roots conical, externally brownish-yellow. Stems slender, frequently branched, externally greyish-green or yellowish-green, with 5 longitudinal ridges; texture soft, fracture hollowed. Leaves mostly crumpled and crumbled, dark green or greyish-green, When whole, lamina bi-or tri-pinnatisect. Flowers seldom, corolla labiate, with hypanthium, pale purple. Capsules flat-long-elliptical, legume-like. Seeds flat-cordate, black, lustrous. Odour, slight; taste, bitter.

Identification (1) Transverse section of stem: Epidermal cells of 1 layer, subround, covered with thick cuticle; stomata sunken. Parenchymatous cells of cortex irregular, occurring 7-10 layers of collenchymatous cells in ridges. Pericycle 1-2 layers of fibres, arranged in a cycle; fibres in ridges crescent-shaped. Collateral vascular bundles occurring at ridges, phloem narrow, xylem composed of vessels, tracheids, fibres and parenchymatous cells. Pith retatively large, hollowed in the centre.

(2) Macerate 0.5 g of the powder, moistened with concentrated ammonia TS, with 10 ml of chloroform, stand overnight and filter. Evaporate the filtrate to dryness, dissolve the residue in 1 ml of chloroform as the test solution. Dissolve corynoline CRS in methanol to produce a solution containing 1 mg per ml as the reference solution. Carry out the method for thin layer chromatography (Appendix Ⅵ B), using silica gel G mixed with 0.4% solution of sodium hydroxide as the coating substance and a mixture of cyclohexane, chloroform and methanol (7 : 2 : 1) as the mobile phase. Apply separately to the plate 10 μl of each of the above two solutions. After developing and removal of the plate, dry in air. Spray with dilute bismuth potassium iodide TS. The spot in the chromatogram obtained with the test solution corresponds in position and colour to the spot in the chromatogram obtained with the

reference solution.

Foreign matter Not more than 2 per cent (Appendix Ⅸ A).

Water Not more than 13.0 per cent (Appendix Ⅸ H, method 1).

Extractives Carry out the method for determination of water-soluble extractives (Appendix Ⅹ A, the hot extraction method), not less than 18.0 per cent.

Assay Carry out the method for high performance liquid chromatography (Appendix Ⅵ D).

Chromatographic system and system suitability Use octadecylsilane bonded silica gel as the stationary phase and a mixture of methanol and 0.015 mol/L phosphate BS (Dissolve 1.58 g of potassium dihydrogen phosphate and 0.76 g of dipotassium hydrogen phosphate in 1000 ml of water, mix well, and adjust the pH value to 6.7 with sodium hydroxide TS) (70 : 30) as the mobile phase. As detector a spectrophotometer set at 289 nm. The number of theoretical plates of the column is not less than 6000, calculated with reference to the peak of corynoline.

Reference solution Dissolve a quantity of corynoline CRS, accurately weighed, in methanol to produce a solution containing 40 μg per ml.

Test solution Weigh accurately 0.5 g of the powder (through No. 3 sieve) to a stopper conical flask, add accurately 25 ml of methanol, weigh, macerate for 1 hour, ultrasonicate (power 250 W, frequency 33 kHz) for 30 minutes, allow to cool, weigh again, compensate the loss of the weight with methanol, mix well, filter, use the successive filtrate as the test solution.

Procedure Inject accurately 20 μl of each of the test solution and the reference solution, respectively, into the column, and calculate the content.

It contains not less than 0.14 per cent of corynoline ($C_{21}H_{21}O_5N$), calculated with reference to the dried drug.

Processing Eliminate foreign matter, wash clean, cut into sections, and dry.

Action To clear toxic *heat* and treat carbuncles.

Indications Swollen and painful throat, furunculosis, back carbuncle, mumps and erysipelas.

Usage and dosage 9-15 g; appropriate quantity for external use, decocted for washing.

Storage Preserve in a dry place.

Herba Cynomorii (锁阳, Suoyang)

Songaria Cynomorium Herb

Songaria Cynomorium Herb is the dried fleshy stem of *Cynomorium songaricum* Rupr. (Fam. Cynomoriaceae). The drug is collected in spring, removed from inflorescence, cut into section, and dried in the sun.

Description Flat cylindrical, slightly curved, 5-15 cm long, 1.5-5 cm in diameter. Externally brown or dark brown, rough, with distinct longitudinal furrows and irregular pits, sometimes with remains of triangular, dark brown scales. Texture heavy and hard, uneasily broken, fracture pale brown or brown, with yellow, triangular vascular bundles. Odour, slight; taste, sweet and astringent.

Identification (1) To 1 g of the powder add 10 ml of water, macerate for 30 minutes, filter, use the filtrate as the test solution. Dissolve proline CRS in water to produce a solution containing 2 mg per ml as the reference solution. Carry out the method for thin layer chromatography (Appendix Ⅵ B), using silica gel H mixed with sodium carboxymethylcellulose as the coating substance and a mixture of *n*-propanol, glacial acetic acid, ethanol and water (4 : 1 : 1 : 2) as the mobile phase. Apply separately to the plate 5 μl of each of the above two solutions. After developing and removal of the plate, dry in air. Spray with isatin TS solution, heat at 100℃ to the spots clear. The spot in the chromatogram obtained with the test solution corresponds in position and colour to the spot in the chromatogram obtained with the reference solution.

(2) Ultrasonicate 1 g of the powder with 20 ml of ethyl acetate for 30 minutes, filter, concentrate the filtrate to 1 ml as the test solution. Dissolve oleanolic acid CRS in methanol to produce a solution containing 0.5 mg per ml as the reference solution. Carry out the method for thin layer chromatography (Appendix Ⅵ B), using silica gel G as the coating substance and a mixture of toluene, ethyl acetate and formic acid (20 : 4 : 0.5) as the mobile phase. Apply separately to the plate 10 μl of the test solution and 4 μl of the reference solution. After developing and removal of the plate, dry in air. Spray with 10% sulfuric acid in ethanol, heat to the spots clear. A purplish-red spot in the chromatogram obtained with the test solution corresponds in position and colour to the spot in the chromatogram obtained with the reference solution.

Foreign matter Not more than 2 per cent (Appendix Ⅸ A).

Water Not more than 12.0 per cent (Appendix Ⅸ H, method 1).

Total ash Not more than 14.0 per cent (Appendix Ⅸ K).

Acid-insoluble ash Not more than 1.5 per cent (Appendix Ⅸ K).

Extractives Carry out the method for determination of ethanol-soluble extractives (Appendix Ⅹ A, the hot extraction method), using ethanol as the solvent, not less than 14.0 per cent.

Processing Wash clean, soften thoroughly, cut into thin slices and dry.

Action To reinforce *kidney-yang*, replenish *essence* and blood, and relax bowels.

Indications Aching and weakness of the lower back and knees, impotence, spermatorrhea, constipation.

Usage and dosage 5-9 g.

Storage Preserve in a ventilated and dry place.

Herba Desmodii Styracifolii (广金钱草, Guangjinqiancao)

Snowbellleaf Tickclover Herb

Snowbellleaf Tickclover Herb is the dried aerial part of *Desmodium styracifolium* (Osb.) Merr. (Fam. Leguminosae). The drug is collected in summer and autumn, removed from foreign matter, and dried in the sun.

Description Stems cylindrical, up to 1 m long, densely covered with yellow spreading pubescences; texture slightly fragile, fracture medullated in the centre. Leaves alternate,

leaflets 1-3, rounded or oblong, 2-4 cm in diameter; retuse at the apex, cordate or obtusely rounded at the base, margin entire; the upper surface yellowish-green or greyish-green, glabrous, the lower surface densely covered with greyish-white tomenta, lateral veins pinnate; petiole 1-2 cm long; stipules 2, lanceolate, about 8 mm long. Odour, slightly aromatic; taste, slightly sweet.

Identification To 5 g of the powder add 100 ml of ethanol, heat under reflux for 30 minutes, and filter. Evaporate the filtrate to dryness, dissolve the residue in 30 ml of hot water, cool, and filter. Extract the filtrate with two 30-ml quantities of ethyl acetate, combine the ethyl acetate extracts and evaporate to dryness. Dissolve the residue in 1 ml of dehydrated ethanol as the test solution. Prepare a solution with Herba Desmodii Styracifolii reference drug in the same manner as the reference drug solution. Carry out the method for thin layer chromatography (Appendix Ⅵ B), using polyamide as the coating substance and a mixture of toluene, ethyl acetate and formic acid (75 : 24 : 10) as the mobile phase. Apply separately to the film 2 μl of each of the above two solutions. After developing and removal of the film, dry in hot air. Spray with aluminium trichloride TS. Examine under ultraviolet light at 365 nm. The three main greenish-yellow fluorescent spots in the chromatogram obtained with the test solution correspond in position and colour to the spots in the chromatogram obtained with the reference drug solution.

Extractives Carry out the method for determination of water-soluble extractives (Appendix Ⅹ A, the cold maceration method), not less than 5.0 per cent.

Processing Eliminate foreign matter, cut into sections, and dry in the sun.

Action To remove *damp-heat*, induce urination and relieve dysuria.

Indications Urination disturbance caused by *damp-heat* or urolithiasis accompanied with difficult painful urination; edema with oliguria; jaundice with dark urine.

Usage and dosage 15-30 g.

Storage Preserve in a dry place.

Preparation Shilintong Tablets

Herba Dianthi (瞿麦, Qumai)

Lilac Pink Herb

Lilac Pink Herb is the dried aerial part of *Dianthus superbus* L. or *Dianthus chinensis* L. (Fam. Caryophyllaceae). The drug is collected at flowering and fruiting in summer and autumn, removed from foreign matter, and dried.

Description *Herb of Dianthus superbus* Stems cylindrical, branched at the upper part, 30-60 cm long; externally pale green or yellowish-green, glabrous, nodes distinct, slightly swollen, fracture hollowed. Leaves opposite, mostly crumpled, lamina linear or linear-lanceolate when spread out. The tops of branches bearing flowers and fruits, calyx tubular, 2.7-3.7 cm long; bracts 4-6, broadly ovate, about 1/4 in length of calyx tube; petals brownish-purple or brownish-yellow, rolled, deeply laciniate at the apex. Capsules cylindrical, as long as persistent calyx. Seeds minute, numerous. Odour, slight; taste, weak.

Herb of Dianthus chinensis Calyx tubes 1.4-1.8 cm long, bracts about 1/2 in length of calyx tube; petals shallowly toothed at the apex.

Identification To 0.5 g of the powder add 10 ml of water, heat for 10 minutes, filter while hot, and cool. Place 2 ml of the filtrate into a stopper test tube, shake vigorously for 1 minute; the persisting foam is produced, lasting for about 10 minutes.

Processing Eliminate foreign matter, wash clean, soften briefly, cut into sections and dry.

Action To relieve dysuria, and stimulate menstrual blood flow.

Indications Urinary infection and urolithiasis with difficult painful urination or hematuria; amenorrhea.

Usage and dosage 9-15 g.

Precaution Contraindicated in pregnancy.

Storage Preserve in a ventilated and dry place.

Herba Ecliptae (墨旱莲, Mohanlian)

Yerbadetajo Herb

Yerbadetajo Herb is the dried aerial part of *Eclipta prostrata* L. (Fam. Compositae). The drug is collected at flowering, and dried in the sun.

Description White pubescent wholly. Stems cylindrical, with longitudinal ridges, 2-5 mm in diameter; externally greenish-brown or dark green. Leaves opposite, almost sessile, lamina crumpled and rolled or broken, when whole, long-lanceolate, margin entire or shallowly dentate, dark green. Capitulum 2-6 mm in diameter. Achenes elliptical and flattened, 2-3 mm long, brown or pale brown. Odour, slight; taste, slightly salty.

Identification (1) Infuse in water and rub the stems and leaves, a dark green colour is produced.
(2) Surface view of leaf: Non-glandular hairs frequently 3-celled, 260-700 μm long, basal cells slightly inflated, middle cells relatively long, walls thickened with distinct prominent warts, apical cells sharply acute and short, subtriangular. Stomata anomocytic, with 3-4 subsidiary cells.
(3) To 1 g of the powder add 20 ml of ethanol, macerate for 2 hours, ultrasonicate for 30 minutes, filter. Evaporate the filtrate to dryness. Dissolve the residue in 1 ml of dehydrated ethanol as the test solution. Prepare a solution with 1 g of Herba Ecliptae reference drug in the same manner as the reference drug solution. Carry out the method for thin layer chromatography (Appendix Ⅵ B), using silica gel G as the coating substance and a mixture of *n*-hexane and ethyl acetate (9 : 1) as the mobile phase. Apply separately to the plate 4 μl of each of the above two solutions. After developing and removal of the plate, dry in air, and examine under ultraviolet light at 365 nm. The fluorescent spots in the chromatogram obtained with the test solution correspond in position and colour to the spots in the chromatogram obtained with the reference drug solution.

Processing Eliminate foreign matter, wash briefly, cut into sections, and dry in the sun.

Action To reinforce the liver and the kidney, and arrest bleeding by removing *heat* from blood.

Indications Looseness of teeth, premature greying of hair and beard; dizziness, tinnitus, aching and weakness of the

lower back and knees; spitting blood, epistaxis, hematuria and diarrhea with bloody stools due to *heat* in blood; abnormal uterine bleeding, traumatic bleeding.

Usage and dosage 6-12 g; appropriate quantity of the fresh herb for external use.

Storage Preserve in a ventilated and dry place.

Herba Ephedrae (麻黄, Mahuang)

Ephedra

Ephedra is the dried herbaceous stem of *Ephedra sinica* Stapf, *Ephedra intermedia* Schrenk et C. A. Mey. or *Ephedra equisetina* Bge. (Fam. Ephedraceae). The drug is collected in autumn, and dried in the sun.

Description *Herb of Ephedra sinica* Slenderly cylindrical, infrequently branched, 1-2 mm in diameter. Some with a few brown woody stems. Externally pale green to yellowish-green, with fine longitudinal ridges, slightly rough. Nodes distinct, internodes 2-6 cm long. Scaly leaves on the nodes membranous, 3-4 mm long, with 2 lobes (rarely 3), acutely triangular, apex greyish-white, reversed, base tubular and reddish-brown in colour. Texture light, fragile, and easily broken, fracture slightly fibrous with greenish-yellow edge and subrounded reddish-brown pith. Odour, slightly aromatic; taste, astringent and slightly bitter.

Herb of Ephedra intermedia Frequently branched, 1.5-3 mm in diameter, rough. membranous scaly leaves 2-3 mm long, with 3 lobes (rarely 2), apex acute. Fracture showing a triangular rounded pith.

Herb of Ephedra equisetina Frequently branched, 1-1.5 mm in diameter, without rough feeling. Internodes 1.5-3 cm long. Membranous scaly leaves 1-2 mm long, with 2 lobes (rarely 3), the upper part short-triangular, greyish-white, apex infrequently reversed, base brownish-red to brownish-black.

Identification (1) Transverse section of stem:

Herb of Ephedra sinica Epidermis covered with thick cuticle; ridges relatively dense, with waxy warty protrudings and sunken stomata located between two ridges. Hypodermal fibre bundles located in ridges, with thickened and unlignified walls. Cortex relatively broad, fibre bundles scattered. Pericycle fibre bundles crescent. Collateral vascular bundles 8-10. Cambium ring subrounded. Xylem triangular. Pith parenchymatous cells containing brown masses; occasionally showing perimedullary fibres. Outer walls of epidermal cells, cortex parenchymatous cells and fibres occurring numerous fine sandy crystals or prisms of calcium oxalate.

Herb of Ephedra intermedia Vascular bundles 12-15. Cambium ring subtriangular. Perimedullary fibres scattered in bundles or singly.

Herb of Ephedra equisetina Vascular bundles 8-10. Cambium ring subrounded. Perimedullary fibres absent.

(2) To 0.2 g of the powder, add 5 ml of water and 1-2 drops of dilute hydrochloric acid, boil for 2-3 minutes and filter. Transfer the filtrate to a separator, add several drops of ammonia TS to make alkaline and extract with 5 ml of chloroform. Transfer the chloroform solution into 2 tubes. To one tube add ammoniated cupric chloride TS and carbon disulfide, 5 drops of each, shake well and allow to stand, the chloroform layer becomes deep yellow; to another tube add 5 drops of chloroform instead of carbon disulfide as a blank, shake well, the chloroform layer is colourless or slightly yellow.

(3) To 1 g of the powder add several drops of concentrated ammonia TS and 10 ml of chloroform, heat under reflux for 1 hour and filter. Evaporate the filtrate to dryness, add 2 ml of methanol to the residue, shake well, filter, and use the filtrate as the test solution. Dissolve ephedrin hydrochloride CRS in methanol to produce a solution containing 1 mg per ml as the reference solution. Carry out the method for thin layer chromatography (Appendix Ⅵ B), using silica gel G as the coating substance and a mixture of chloroform, methanol and concentrated ammonia TS (20 : 5 : 0.5) as the mobile phase. Apply separately to the plate 5 μl of each of the above two solutions, after developing and removal of the plate, dry in air. Spray with ninhydrin TS and heat at 105℃ to the spots clear. The spot in the chromatogram obtained with the test solution corresponds in position and colour to the spot in the chromatogram obtained with the reference solution.

Foreign matter Not more than 5 per cent (Appendix Ⅸ A).

Water Not more than 9.0 per cent (Appendix Ⅸ H, method 1).

Total ash Not more than 10.0 per cent (Appendix Ⅸ K).

Assay Carry out the method for high performance liquid chromatography (Appendix Ⅵ D).

Chromatographic system and system suitability Use octadecylsilane bonded silica gel as the stationary phase and a mixture of acetonitrile and 0.1% phosphoric acid solution (9 : 87) as the mobile phase. As detector a spectrophotometer set at 207 nm. The number of theoretical plates of the column is not less than 3000, calculated with reference to the peak of ephedrin hydrochloride.

Reference solution Weigh accurately 10 mg of ephedrin hydrochloride CRS to a 100 ml volumetric flask and dilute with methanol to volume. Transfer accurately 2 ml of the solution to a 25 ml volumetric flask, dilute with the mobile phase to volume, mix well as the reference solution (containing 8 μg per ml).

Test solution Weigh accurately 0.2 g of the fine powder to a stopper conical flask, add accurately 25 ml of methanol, weigh, ultrasonicate for 45 minutes (power, 160 W; frequency, 50 kHz), allow to cool, weigh again and compensate the loss of the weight with methanol, shake well and filter. Apply accurately 1 ml of the successive filtrate to a small column (1 cm in inner diameter) packed with neutral aluminium oxide (100-200 mesh, 1.5 g), elute with 50% methanol. Collect about 9 ml of the eluate in a 10 ml volumetric flask, add 1 drop of phosphoric acid, dilute with 50% methanol to volume, mix well.

Procedure Inject accurately 10-20 μl of the reference solution and the test solution, respectively, into the column, and calculate the content.

It contains not less than 1.0 per cent of ephedrin hydrochloride ($C_{10}H_{15}NO \cdot HCl$), calculated with reference to the dried drug.

Processing *Herba Ephedrae* Remove the woody stems, roots and foreign matter, and cut into sections.

Herba Ephedrae (processed with honey) Stir-bake the sections of Herba Ephedrae as described under the method for stir-baking with honey (Appendix Ⅱ D) until it is not sticky to fingers, using 20 kg of refined honey per 100 kg of Herba Ephedrae.

Action To induce perspiration to expel *cold*, relieve

asthma, and cause diuresis.

Herba Ephedrae (processed with honey) To moisten the *lung* and relieve cough.

Indications Common cold of the *wind-cold* syndrome marked by chill and mild fever, headache, stuffy and running nose, general aching, absence of sweating; edema in acute nephritis; bronchial asthma.

Herba Ephedrae (processed with honey) Cough in common cold at the later stage when chill is absent.

Usage and dosage 2-9 g.

Storage Preserve in a ventilated and dry place, protected from moisture.

Herba Epimedii (淫羊藿, Yinyanghuo)

Epimedium Herb

Epimedium Herb is the dried aerial part of *Epimedium brevicornum* Maxim., *Epimedium sagittatum* (Sieb. et Zucc.) Maxim., *Epimedium pubescens* Maxim., *Epimedium wushanense* T. S. Ying or *Epimedium koreanum* Nakai (Fam. Berberidaceae). The drug is collected in summer and autumn when foliage branch growing luxuriantly, removed from thick stalk and foreign matter, and dried in the sun or in the shade.

Description *Herb of Epimedium brevicornum* Stems slenderly cylindrical, about 20 cm long, externally yellowish-green or pale yellow, lustrous. Cauline leaves opposite, double ternately compound; leaflets ovate, 3-8 cm long, 2-6 cm wide; apex slightly acute, terminal leaflets cordate at the base, bilateral leaflets relatively small, oblique-cordate, the outer side relatively large, auriculate, margin with yellow and thorny serrulations; the upper surface yellowish-green, the lower surface greyish-green, main veins 7-9, occurring sparsely slender hairs at the base, thin veins prominent on both surfaces, reticulated veins distinct; petiolules 1-5 cm long. Lamina subleathery. Odour, slight; taste, slightly bitter.

Herb of Epimedium sagittatum Leaves terrately compound, leaflets long-ovoid to ovoid-lanceolate, 4-12 cm long, 2.5-5 cm wide; acuminate at the apex; bilateral leaflets distinctly oblique at the base, the outer side arrow-shaped. The lower surface sparsely covered with thick, short and pronated hairs or nearly glabrous. Lamina leathery.

Herb of Epimedium pubescens The lower surface of lamina and petioles densely covered with flossy pubescences.

Herb of Epimedium wushanense Leaflets lanceolate to narrowly lanceolate, 9-23 cm long, 1.8-4.5 cm wide; acuminate or long-acuminate at the apex, margin thorny-dentate, basal lobes of the bilateral leaflets oblique, the inside lobes small and rounded, the outside lobes large, triangular, acuminate. The lower surface tomentose or bare.

Herb of Epimedium koreanum Leaflets relatively large, 4-10 cm long, 3.5-7 cm wide, long-acuminate at the apex. Lamina relatively thin.

Identification To 0.5 g of the powder add 10 ml of ethanol, macerate warmly for 30 minutes, filter, evaporate the filtrate to dryness. Dissolve the residue in 1 ml of ethanol as the test solution. Carry out the method for thin layer chromatography (Appendix Ⅵ B), using silica H mixed with sodium carboxymethylcellulose as the coating substance and a mixture of ethyl acetate, butanone, formic acid and water (10 : 1 : 1 : 1) as the mobile phase. Apply separately to the plate 10 μl of each of the test solution and the reference solution obtained under Assay of icariine. After developing and removal of the plate, dry in air and examine under ultraviolet light at 365 nm. The dark red fluorescent spot in the chromatogram obtained with the test solution corresponds in position and colour to the spot in the chromatogram obtained with the reference solution. Spray with aluminium chloride TS, examine again under ultraviolet light at 365 nm, the spots turn to orange-red.

Foreign matter Not more than 3 per cent (Appendix Ⅸ A).

Water Not more than 12.0 per cent (Appendix Ⅸ H, method 1).

Total ash Not more than 8.0 per cent (Appendix Ⅸ K).

Acid-insoluble ash Not more than 1.0 per cent (Appendix Ⅸ K).

Extractives Carry out the method for determination of ethanol-soluble extractives (Appendix Ⅹ A, the cold maceration method), using dilute ethanol TS as the solvent, not less than 15.0 per cent.

Assay ***Total flavones*** Transfer accurately 0.5 ml of the test solution obtained under the determination for icarrine to a 50 ml volumetric flask, add methanol to volume, mix well as the test solution. Dissolve icariine CRS in methanol to produce a solution containing 10 μg per ml as the reference solution. Carry out the method for ultraviolet spectrophotometry and colourimetry (Appendix Ⅴ A), measure the absorbance of the test solution and the reference solution at 270 nm, calculate the content.

It contains not less than 5.0 per cent of total flavones, calculated as icariine ($C_{33}H_{40}O_{15}$), with reference to the dried drug.

Icariine Carry out the method for high performance liquid chromatography (Appendix Ⅵ D).

Chromatographic system and system suitability Use octadecylsilane bonded silica gel as the stationary phase and a mixtrue of acetonitrile and water (30 : 70) as the mobile phase. As detector a spectrophotometer set at 270 nm. The number of theoretical plates of the column is not less than 1500, calculated with reference to the peak of icariine.

Reference solution Dissolve icariine CRS in methanol to produce a solution containing 0.1 mg per ml as the reference solution.

Test solution Weigh accurately 0.2 g of the leaf powder (through No. 3 sieve) in a stopper conical flask, add accurately 20 ml of dilute ethanol, weigh, ultrasonicate for 1 hour, weigh again and compensate the loss of the weight with dilute ethanol, mix well, filter, use the successive filtrate as the test solution.

Procedure Inject accurately 10 μl of each of the reference solution and the test solution, respectively, into the column, and caculate the content.

It contains not less than 0.50 per cent of icariine ($C_{33}H_{40}O_{15}$), calculated with reference to the dried drug.

Processing *Herba Epimedii* Eliminate foreign matter, pick the leaves, spray with water, soften slightly, cut into slivers and dry.

Herba Epimedii (stir-baked) Stir-bake the slivers of Herba Epimedii with refined suet by gentle heating until an evenly lustre is produced, remove and cool. Using 20 kg of refined suet per 100 kg of Herba Epimedii.

Action To reinforce *kidney-yang*, strengthen the tendons and bones, and relieve rheumatic condition.

Indications Impotence, seminal emission, weakness of the limbs; rheumatic or rheumatoid arthralgia with numbness and muscle contracture; climacteric hypertension.

Usage and dosage 3-9 g.

Storage Preserve in a ventilated and dry place.

Herba Equiseti Hiemalis (木贼, Muzei)

Common Scouring Rush Herb

Common Scouring Rush Herb is the dried aerial part of *Equisetum hiemale* L. (Fam. Equisetaceae). The drug is collected in summer and autumn, removed from foreign matter, and dried in the sun or in the shade.

Description Long tubular, unbranched, 40-60 cm long, 0.2-0.7 cm in diameter. Externally greyish-green or yellowish-green, with 18-30 longitudinal ridges and numerous fine, shiny warts on the ridges; nodes distinct, internodes 2.5-9 cm long, with tubular scaly leaves on the nodes, the base and teeth of leaf sheath blackish-brown, the middle part pale brownish-yellow. Texture light, fragile, easily broken, fracture hollowed, with numerous, small rounded cavities on edge. Odour, slight; taste, sweet and weak, slightly astringent, sandy when chewing.

Identification (1) Transverse section of stem: Epidermal cells of 1 layer, covered with cuticle. Surface with sunken grooves and protuberant ridges. Transparent silica protuberances 2, on the ridge, and sunken stomata 2, located in each groove. Cortex parenchyma occurring inside epidermis; sclerenchyma occurring inside ridges and inserting into cortex parenchyma, in cuneate shape. Sclerenchyma located in grooves, of 1-2 layers. cortex parenchymatous cells long cylindrical or subrounded, an empty lumen located in grooves. Endodermis of 2 layers, outer one in sinuous ring, and inner one in rounded ring. Casparian dots distinct and visible in both layers. Vascular bundles collateral, located between two layers of endodermis, and beneath the ridges, a centre lumen occurring in inner part of each vascular bundle, pith parenchymatous cells located inside endodermis, and flattened and shrunken, pith lumen in centre.

(2) To 1 g of the powder add 25 ml of 75% methanol and 1 ml of hydrochloric acid, heat under reflux for 1 hour, and filter. Dissolve the residue in 10 ml of water, extract with two 10-ml quantities of ethyl acetate, combine the ethyl acetate extracts and evaporate to dryness, dissolve the residue in 1 ml of methanol as the test solution. Dissolve kaempferol CRS in methanol to produce a solution containing 1 mg per ml as the reference solution. Carry out the method for thin layer chromatography (Appendix VI B), using silica gel G as the coating substance and a mixture of cyclohexane, ethyl acetate and formic acid (8 : 4 : 0.4) as the mobile phase. Apply separately to the plate 5 μl of the test solution and 2 μl of the reference solution. After developing and removal of the plate, dry in air. Spray with 5% aluminium trichloride in ethanol, examine under ultraviolet light at 365 nm immediately. The fluorescent spot in the chromatogram obtained with the test solution corresponds in position and colour to the spot in the chromatogram obtained with the reference solution.

Water Not more than 13.0 per cent (Appendix IX H, method 1).

Extractives Carry out the method for determination of ethanol-soluble extractives (Appendix X A, the hot extraction method), not less than 5.0 per cent.

Assay Carry out the method for high performance liquid chromatography (Appendix VI D).

Chromatographic system and systm suitability Use octadecylsilane bonded silica gel as the stationary phase and a mixture of acetonitrile and 0.4% phosphoric acid solution (50 : 50) as the mobile phase. As detector a spectrophotometer set at 365 nm. The number of theoretical plates of the column is not less than 3000, calculated with reference to the peak of kaempferol.

Reference solution Weigh accurately 10 mg of kaempferol CRS in a 100 ml volumetric flask, dilute with 75% methanol to volume, and mix well. Accurately measure 2 ml in a 10 ml volumetric flask, dilute with 75% methanol to volume, and mix well (containing 20 μg of kaempferol per ml).

Test solution Weigh accurately 0.75 g of the coarse powder (through No. 3 sieve) in a stopper conical flask. Add accurately 50 ml of 75% methanol, weigh, heat on a water bath for 1 hour, cool, weigh again, replenish the loss of the weight with 75% methanol, mix well and filter. Measure accurately 20 ml of the successive filtrate, add accurately 5 ml of hydrochloric acid, heat on a water bath for 1 hour, and cool. Transfer to a 50 ml volumetric flask, dilute with 75% methanol to volume and mix well.

Procedure Inject accurately 10 μl of each of the reference solution and the test solution, respectively, into the column, and calculate the content.

It contains not less than 0.20 per cent of kaempferol ($C_{15}H_{10}O_6$), calculated with reference to the dried drug.

Processing Remove the withered stems and remained roots, spray with water, soften briefly, cut into sections, and dry.

Action To dispel *wind-heat* and remove nebula.

Indications Conjunctival congestion caused by *wind-heat*, lacrimination induced by irritation of the *wind*, nebula.

Usage and dosage 3-9 g.

Storage Preserve in a dry place.

Herba Erigerontis (灯盏细辛, Dengzhanxixin)

Shortscape Fleabane Herb

Shortscape Fleabane Herb is the dried herb of *Erigeron breviscapus* (Vant.) Hand.-Mazz. (Fam. Compositae). The drug is collected in summer and autumn, removed from foreign matter, and dried in the sun.

Description 15-25 cm long. Rhizomes 1-3 cm long, 2-5 mm in diameter, externally uneven, with numerous fine cylindrical rootlets, about 1 mm in diameter, pale brown to yellowish-brown. Stems cylindrical, 14-22 cm long, 1-2 mm in diameter, yellowish-green to pale brown, with fine longitudinal ridge lines and white pubescences; texture fragile, fracture yellowish-white, medullated or hollowed. Basal leaves crumpled and crumbled, when whole, obovate-lanceolate, spatulate, broadly lanceolate or broadly obovate, 1.5-9 cm long, 0.5-1.3 cm wide, yellowish-green, apex obtuse, with a short tine and a narrow-

decurrent base, margin entire; cauline leaves alternate, lanceolate, amplexicaul at the base. Capitulum acrogenous. Achenes flat-obovate. Odour, slight; taste, slightly bitter.

Identification (1) Surface view of leaf: The walls of epidermal cells sinuous, with cutin striation, stomata anomocytic. Non-glandular hairs 1-8-celled, 180-560 μm long. Glandular hairs with a 1-4-celled head and an uni- or poly-cellular stalk.
(2) The retention time of one peak in the chromatogram obtained under the Assay corresponds to that of the reference.

Water Not more than 12.0 per cent (Appendix Ⅸ H, method 1).

Total ash Not more than 15.0 per cent (Appendix Ⅸ K).

Acid-insoluble ash Not more than 8.0 per cent (Appendix Ⅸ K).

Extractives Carry out the method for determination of ethanol-soluble extractives (Appendix Ⅹ A, the hot extraction method), using ethanol as the solvent, not less than 7.0 per cent.

Assay Carry out the method for high performance liquid chromatography (Appendix Ⅵ D).

Chromatographic system and system suitability Use octadecylsilane bonded silica gel as the stationary phase and a mixture of methanol and 0.1% phosphoric acid solution (40 : 60) as the mobile phase. As detector a spectrophotometer set at 335 nm. The number of theoretical plates of the column is not less than 5000, calculated with reference to the peak of scutellarin.

Reference solution Dissolve a quantity of scutellarin, accurately weighed, in methanol to produce a solution containing 0.1 mg per ml.

Test solution Weigh accurately 0.5 g of the coarse powder to a Soxhlet's extractor, add appropriate quantity of chloroform, heat under reflux until the extractive colourless, discard the chloroform extract. After expel the solvent, transfer the residue and the filter in a stopper conical flask, add accurately 50 ml of methanol, weigh, stand for 1 hour, heat on a water bath for 1 hour, allow to cool, weigh again, and compensate the loss of the weight with methanol, mix well, filter. Accurately measure 25 ml of the successive filtrate, evaporate to dryness, dissolve the residue in methanol and transfer to a 10 ml volumetric flask, dilute with methanol to volume, mix well.

Procedure Inject accurately 5-10 μl of each of the test solution and the reference solution, respectively, into the column, and calculate the content.
It contains not less than 0.30 per cent of scutellarin ($C_{21}H_{18}O_{12}$), calculated with reference to the dried drug.

Action To expel *wind* and disperse *cold*, promote blood circulation to dredge meridians, and stop pain.

Indications Arthralgia due to *wind*, *cold* or *dampness*, apoplexy, constriction in the chest with heart pain; toothache; common cold.

Usage and dosage 9-15 g. Powder form taken with steamed egg soup, or appropriate quantity for external use.

Storage Preserve in a dry place.

Herba Erodii Herba Geranii (老鹳草, Laoguancao)

Common Heron's Bill Herb, Wilford Granesbill Herb

Common Heron's Bill Herb or Wilford Granesbill Herb is the dried aerial part of *Erodium stephanianum* Willd., *Geranium wilfordii* Maxim. or *Geranium carolinianum* L. (Fam. Geraniaceae). The former is known as "Changzui Laoguancao" (Laoguancao with a long mouth, Herba Erodii) and both of the latter are known as "Duanzui Laoguancao" (Laoguancao with a short mouth, Herba Geranii). The drug is collected in summer and autumn when the fruit is nearly ripe, tied up in bundles, and dried in the sun.

Description *Herb of Erodium stephanianum* Stems 30-50 cm long, 3-7 mm in diameter, frequently branched, nodes swollen; externally greyish-green or purplish, longitudinally furrowed and sparsely pubescent; texture fragile, fracture yellowish-white, sometimes hollowed. Leaves opposite, slenderly petioled; lamina rolled and crumpled, fragile and easily broken, when whole, bipinnatipartite, lobes lanceolate-linear. Fruits oblong, 0.5-1 cm long, persistent style 2.5-4 cm long, beak-shaped, sometimes 5-lobed, spirally rolled. Odourless; taste, weak.

Herb of Geranium wilfordii Stems relatively thin, slightly short. Lamina rounded, 3- or 5-parted, lobes relatively broad, margin incised. Fruits globose, 0.3-0.5 cm long. Style 1-1.5 cm long, sometimes 5-lobed and rolled upwards to be umbellate.

Herb of Geranium carolinianum Lamina palmatisect, 5-7 parted, lobes stripe-shaped and 3-5 parted.

Foreign matter Not more than 2 per cent (Appendix Ⅸ A).

Water Not more than 12.0 per cent (Appendix Ⅸ H, method 1).

Total ash Not more than 10.0 per cent (Appendix Ⅸ K).

Acid-insoluble ash Not more than 2.0 per cent (Appendix Ⅸ K).

Extractives Carry out the method for determination of water-soluble extractives (Appendix Ⅹ A, the hot extraction method), not less than 18.0 per cent.

Processing Eliminate remains of roots and foreign matter, wash briefly, cut into sections, and dry in the sun.

Action To remove obstruction of *channels* and *collaterals*, relieve rheumatic condition, and arrest diarrhea.

Indications Rheumatic or rheumatoid arthralgia, numb and immobilized body; diarrhea, dysentery.

Usage and dosage 9-15 g.

Storage Preserve in a cool and dry place.

Preparation Common Heron's Bill Ointment.

Herba Eupatorii (佩兰, Peilan)

Fortune Eupatorium Herb

Fortune Eupatorium Herb is the dried aerial part of *Eupatorium fortunei* Turcz. (Fam. Compositae). The drug is collected in summer and autumn respectively, removed from foreign matter, and dried in the sun.

Description Stems cylindrical, 30-100 cm long, 2-5 mm in diameter; externally yellowish-brown or yellowish-green, sometimes purplish, with distinct nodes and longitudinal ridges; texture fragile, fracture white or hollowed in pith. Leaves opposite, petioled, lamina mostly crumpled and broken, greenish-brown; the entire ones trifid or not divided, the middle segments of trifid ones relatively large, when whole, lanceolate or oblong-lanceolate, base narrow, margin serrate; the not-divided ones, when whole, ovate, ovate-lanceolate or elliptical. Odour, aromatic; taste, slightly bitter.

Identification To 1 g of the powder add 15 ml of petroleum ether (30-60℃), ultrasonicate for 10 minutes, filter, evaporate the filtrate to dryness, and dissolve the residue in 1 ml of petroleum ether (30-60℃) as the test solution. Prepare a solution with 1 g of Herba Eupatorii reference drug in the same manner as the reference drug solution. Carry out the method for thin layer chromatography (Appendix Ⅵ B), using silica gel G as the coating substance and a mixture of petroleum ether (30-60℃) and ethyl acetate (19 : 1) as the mobile phase. Apply separately to the plate 5 μl of each of the above two solutions. After developing and removal of the plate, dry in air. Spray with 2% vanillin in sulfuric acid, heat to the spots clear. The spots in the chromatogram obtained with the test solution correspond in position and colour to the spots in the chromatogram obtained with the reference drug solution.

Processing Eliminate foreign matter, wash clean, soften briefly, cut into sections, and dry in the sun.

Action To resolve *damp*, invigorate the function of the *spleen* and improve appetite by its spicy fragrance, and to expel *summer heat* from the body surface.

Indications Accumulation of *dampness* in the spleen and stomach, marked by stuffiness in the epigastrium, nausea, sweet taste and sticky sensation in the mouth, foul breath and salivation; afflications due to summer-heat and *dampness* marked by distension in the head and stuffiness in the chest.

Usage and dosage 3-9 g.

Storage Preserve in a cool and dry place.

Herba Euphorbiae Humifusae (地锦草, Dijincao)

Creeping Euphorbia

Creeping Euphorbia is the dried herb of *Euphorbia humifusa* Willd. or *Euphorbia maculata* L. (Fam. Euphorbiaceae). The drug is collected in summer and autumn, removed from foreign matter, and dried in the sun.

Description *Herb of Euphorbia humifusa* Frequently crumpled and curved. Roots slender. Stems thin, furcate-branched, externally purplish-red, glabrous or sparsely white pubescent; texture fragile, easily broken, fracture yellowish-white, hollowed in the centre. Leaves simple, opposite, with pale red and short petioles or almost sessile; lamina mostly crumpled or fallen off, when whole, long-elliptic, 5-10 mm long, 4-6 mm wide; green or purplish-red, frequently glabrous or sparsely pubescent; apex obtusely rounded, base oblique, margin serrulate or slightly sinuous. Cup-shaped cyme axillary, small. Capsules triangular-spherical, externally smooth. Seeds small, ovoid, brown. Odour, slight; taste, slightly astringent.

Herb of Euphorbia maculata Leaves with red spots on the upper surface, capsules sparsely white pubescent.

Identification (1) Powder: Greenish-brown. Outer walls of the leaf epidermal cells papillary. Surrounding cells of the fine vein ends in mesophyll arranged radiately. Non-glandular hairs 3-8-celled, about 14 μm in diameter, mostly broken.

(2) To 1 g of the powder add 50 ml of 80% methanol, heat under reflux for 1 hour, cool, and filter. Evaporate the filtrate to dryness, dissolve the residue in 60 ml of a mixture of water and ether (1 : 1), stand to two layers separated, and discard the ether solution. Extract the water solution with two 20-ml quantities of ether, discard the ether solutions, to water solution add 5 ml of hydrochloric acid, heat on a water bath for 1 hour, and cool immediately. Extract the water solution with two 20-ml quantities of ether, combine the ether solutions, wash with 30 ml of water, and discard the washing. Expel the ether solution to dryness, and dissolve the residue in 1 ml of ethanol as the test solution. Dissolve quercetin CRS in ethanol to produce a solution containing 1 mg per ml as the reference solution. Carry out the method for thin layer chromatography (Appendix Ⅵ B), using silica gel G as the coating substance and a mixture of toluene, ethyl acetate and formic acid (5 : 4.5 : 0.5) as the mobile phase. Apply separately to the plate 10 μl of the test solution and 2 μl of the reference solution. After developing and removal of the plate, dry in air. Spray with 3% aluminium trichloride in ethanol, heat at 105℃ for several minutes, examine under ultraviolet light at 365 nm. The fluorescent spot in the chromatogram obtained with the test solution corresponds in position and colour to the spot in the chromatogram obtained with the reference solution.

Foreign matter Not more than 3 per cent (Append Ⅸ A).

Water Not more than 10.0 per cent (Appendix Ⅸ H, method 1).

Total ash Not more than 12.0 per cent (Appendix Ⅸ K).

Acid-insoluble ash Not more than 3.0 per cent (Appendix Ⅸ K).

Extractives Carry out the method for determination of ethanol-soluble extractives (Appendix Ⅹ A, the hot extraction method), using 75% ethanol as the solvent, not less than 18.0 per cent.

Assay Carry out the method for high performance liquid chromatography (Appendix Ⅵ D).

Chromatographic system and system suitability Use octadecylsilane bonded silica gel as the stationary phase and a mixture of methanol and 0.4% phosphoric acid solution (50 : 50) as the mobile phase. As detector a spectrophotometer set at 360 nm. The number of theoretical plates of the column is not less than 2500, calculated with reference to the peak of quercetin.

Reference solution Dissolve a quantity of quercetin CRS, accurately weighed, in 80% methanol to produce a solution containing 20 μg of quercetin per ml as the reference solution.

Test solution Weigh accurately 1.5 g of the coarse powder (through No. 3 sieve) in a stopper conical flask. Add accurately 50 ml of 80% methanol, weigh, heat on a water bath for 1.5 hour, cool, weigh again, replenish the loss of the weight with 80% methanol, mix well and filter. Measure accurately 20 ml of the successive filtrate, add accurately 7 ml of 25% hydrochloric acid, heat on a water bath at 85℃ for 30 minutes, cool immediately. Transfer to a 50 ml volumetric flask, dilute with methanol to volume and mix well.

Procedure Inject accurately 10 μl of each of the reference solution and the test solution, respectively, into the column, and calculate the content.
It contains not less than 0.10 per cent of quercetin ($C_{15}H_{10}O_7$), calculated with reference to the dried drug.

Processing Eliminate foreign matter, spray with water, soften briefly, cut into sections, and dry in the sun.

Action To remove toxic *heat* and to arrest bleeding by reducing *heat* in blood.

Indications Dysentery, diarrhea, hemoptysis, hematuria, hematochezia, abnormal uterine bleeding, boils and carbuncles.

Usage and dosage 9-20 g; or 30-60 g of the fresh herb; appropriate quantity for external use.

Storage Preserve in a ventilated and dry place.

Herba Glechomae (连钱草, Lianqiancao)

Longtube Ground Ivy Herb

Longtube Ground Ivy Herb is the dried aerial part of *Glechoma longituba* (Nakai) Kupr. (Fam. Labiatae). The drug is collected from spring to autumn, removed from foreign matter, and dried in the sun.

Description 10-20 cm long, sparsely pubescent. Stems square, slender and twisted; externally yellowish-green or purplish-red, bearing adventitious roots at nodes; texture fragile, easily broken, fracture often hollowed. Leaves opposite, mostly crumpled, when whole, reniform or subcordate, 1-3 cm long, 1.5-3 cm wide, greyish-green or greenish-brown, margin crenate; petioles slender, 4-7 cm long. Verticillasters axillary, corolla bilabiate, up to 2 cm long. Odour, aromatic on rubbing; taste, slightly bitter.

Identification (1) Powder: Greyish-green., non-glandular hairs multicellular, 1 to several cells frequently shrunken, and some non-glandular hairs unicellular and conical. Glandular scales with a head of 8 cells. Small glandular hairs with an unicellular head and an unicellular stalk. The walls of leaf lower epidermis cells sinuous. Stomata diacytic. The anticlinal walls of leaf upper epidermal cells sinuous, with relatively fine and dense cuticular striations. Spiral vessels and reticulate vessels 20-30 μm in diameter.
(2) To 2 g of the powder add 25 ml of methanol, heat under reflux for 30 minutes, filter, evaporate the filtrate to dryness, and dissolve the residue in 1 ml of a mixture of dehydrated ethanol and chloroform (3 : 2) as the test solution. Dissolve ursolic acid CRS in dehydrated ethanol to produce a solution containing 1 mg per ml as the reference solution. Carry out the method for thin layer chromatography (Appendix Ⅵ B), using silica H mixed with sodium carboxymethylcellulose solution containing 0.1 mol/L sodium dihydrogen phosphate as the coating substance and a mixture of toluene, ethyl acetate and formic acid (20 : 4 : 0.5) as the mobile phase. Apply separately to the plate 2-4 μl of the test solution and 2 μl of the reference solution. After developing and removal of the plate, dry in air. Spray with 10% sulfuric acid in ethanol, heat at 110℃ to the spots clear. The spot in the chromatogram obtained with the test solution corresponds in position and colour to the spot in the chromatogram obtained with the reference solution.

Foreign matter Not more than 2 per cent (Appendix Ⅸ A).

Water Not more than 13.0 per cent (Appendix Ⅸ H, method 1).

Total ash Not more than 13.0 per cent (Appendix Ⅸ K).

Acid-insoluble ash Not more than 3.0 per cent (Appendix Ⅸ K).

Extractives Carry out the method for determination of ethanol-soluble extractives (Appendix Ⅹ A, the hot extraction method), using dilute ethanol TS as the solvent, not less than 25.0 per cent.

Processing Eliminate foreign matter, wash clean, cut into sections and dry.

Action To relieve dysuria, remove toxic *heat*, eliminate blood stasis, and reduce swelling.

Indications Acute urinary infection, urolithiasis; acute jaundice; painful swelling in sores and carbuncles; traumatic injuries.

Usage and dosage 15-30 g; appropriate quantity of the dried herb is decocted for wash or the fresh herb is pounded into paste for topical application.

Storage Preserve in a dry place, protected from mould.

Herba Houttuyniae (鱼腥草, Yuxingcao)

Heartleaf Houttuynia Herb

Heartleaf Houttuynia Herb is the fresh or dried aerial part of *Houttuynia cordata* Thunb. (Fam. Saururaceae). The fresh drug is collected all the year round. The dried drug is collected in summer when the foliage branch growing luxuriantly and with numerous spikes, removed from foreign matter, and dried in the sun.

Description *Fresh herb of Houttuynia cordata* Stems cylindrical, 20-45 cm long, 2.5-4.3 mm in diameter; the upper part green or purplish-red, the lower part white; nodes distinct, with rootlets on the nodes of lower part, glabrous or sparsely pubescent. Leaves alternate, lamina cordate, 3-10 cm long, 3-11 cm wide, apex acuminate, margin entire; the upper surface yellow, densely distributed glandular dots, the lower surface often purplish-red; petioles slender, accreted with stipule at the base, forming a sheath. Spike terminal. Odour, fishy; taste, astringent.

Dried herb of Houttuynia cordata Stems flat-cylindrical, twisted, externally brownish-yellow, with several longitudinal ridges; texture fragile and easily broken. Lamina rolled and crumpled, when whole, cordate, the upper surface dark

yellowish-green to dark brown, the lower surface greyish-green or greyish-brown. Spike terminal, yellowish-brown.

Identification (1) Place a quantity of the dried herb powder into a test tube, press tightly with a glass rod, add a few drops of fuchsine-sulfurous acid TS to moisten the powder at the upper part, stand for a moment. Observe through the tube wall, the moistened powder shows a pink or reddish-violet colour.
(2) Carry out the method for determination of volatile oil (Appendix Ⅹ D). Heat slowly 25 g of the dried herb or 125 g of the fresh herb (cut into pieces) with 1 ml of ethyl acetate to boil and keep gentle boiling for 4 hours, allow to cool for half hour, use the ethyl acetate solution as the test solution. Dissolve methylnonylketone CRS in ethyl acetate to produce a solution containing 10 μg per ml as the reference solution. Carry out the method for thin layer chromatography (Appendix Ⅵ B), using silica gel G mixed with sodium carboxymethylcellulose as the coating substance and a mixture of *n*-hexane and ethyl acetate (9 : 1) as the mobile phase. Apply separately to the plate 5 μl of the test solution and 2 μl of the reference solution. After developing and removal of the plate, dry in air, spray with dinitrohydrazine TS. The yellow spot in the chromatogram obtained with the test solution corresponds in position and colour to the spot in the chromatogram obtained with the reference solution.

Water *Dried herb of Houttuynia cordata* Not more than 15.0 per cent (Appendix Ⅸ H, method 1).

Acid-insoluble ash *Dried herb of Houttuynia cordata* Not more than 2.5 per cent (Appendix Ⅸ K).

Extractives *Dried herb of Houttuynia cordata* Carry out the method for determination of water-soluble extractives (Appendix Ⅹ A, the cold maceration method), not less than 10.0 per cent.

Processing *Fresh herb of Houttuynia cordata* Eliminate foreign matter.

Dried herb of Houttuynia cordata Eliminate foreign matter, wash clean rapidly, cut into sections, and dry in the sun.

Action To remove toxic *heat*, promote drainage of pus, and relieve dysuria.

Indications Lung abscess with purulent expectoration; *heat* in the lung with cough and dyspnea; acute dysentery; acute urinary infection; carbuncles and sores.

Usage and dosage 15-25 g, boiled briefly; 30-50 g of the fresh herb decocted or pounded to make juice for oral administration. Appropriate quantity is pounded into paste for topical application or a decoction is made fumigation and wash.

Storage Dried herb: preserve in a dry place; Fresh herb: preserve in a cool and moist place.

Preparation Heartleaf Houttuynia Injection

Herba Hyperici Perforati (贯叶金丝桃, Guanyejinsitao)

Common St. John'swort Herb

Common St. John's wort Herb is the dried aerial part of *Hypericum perforatum* L. (Fam. Guttiferae). The drug is collected in summer and autumn at flowering, and dried in the shade or baked at a lower temperature.

Description Stems cylindrical, 10-100 cm long, frequently branched, with a longitudinal ridge on two sides of stems and branches respectively, small branches slender, opposite and axillary. Leaves simple, opposite, sessile and amplexicaul, lamina lanceolate or long-elliptic, 1-2 cm long, 0.3-0.7 cm wide, scattered with transparent or black glandular spots throughout, mostly on edge of lamina or nearly at apex. Cyme terminal, flowers yellow, calyx 5, and petals 5, long-rounded or lanceolate, with black glandular spots at the edges; stamens numerous, gathered into 3 bundles, style 3. Odour, slight; taste, slightly bitter and astringent.

Identification (1) Surface view of leaf: The cells of upper epidermis polygonal, with beaded walls, the cells of lower epidermis polygonal, anticlinal walls sinuous, somewhat beaded, stomata paracytic or anomocytic. Black glandular spots consisting of a mass of secretory cells, contents of cells red; translucent glandular spots with structure of rounded secretory sacs, surrounded by a layer of epithelium cells containing oily contents.
(2) To 0.1 g of the powder add 10 ml of methanol, ultrasonicate for 10 minutes, and filter. Evaporate the filtrate to dryness. Dissolve the residue in 1 ml of methanol as the test solution. Prepare a solution with 0.1 g of Herba Hyperici Perforati reference drug in the same manner as the reference drug solution. Carry out the method for thin layer chromatography (Appendix Ⅵ B), using silica gel G as the coating substance and a mixture of ethyl acetate and formic acid (25 : 1) as the mobile phase. Apply separately to the plate 2 μl of each of the above two solutions. After developing and removal of the plate, dry in air. Examine under ultraviolet at 365 nm immediately. The fluorescent spots in the chromatogram obtained with the test solution correspond in position and colour to the spots in the chromatogram obtained with the reference drug solution.
(3) Dissolve hyperoside CRS and rutin CRS in methanol to produce two solutions containing 0.5 mg of each per ml as the reference solutions. Carry out the method for thin layer chromatography (Appendix Ⅵ B), using silica gel G as the coating substance and a mixture of dichloromethane, methanol and formic acid (20 : 5 : 1) as the mobile phase. Apply separately to the plate 2 μl of each of the test solution obtained under Identification (2) and the above two reference solutions. After developing and removal of the plate, dry in air. Spray with a solution of 1% sulfuric acid in ethanol, heat at 105℃ to the spots clear. The spots in the chromatogram obtained with the test solution correspond in position and colour to the spots in the chromatogram obtained with the reference solutions.

Water Not more than 12.0 per cent (Appendix Ⅸ H, method 1).

Assay Carry out the method for high performance liquid chromatography (Appendix Ⅵ D).

Chromatographic system and system suitability Use octadecylsilane bonded silica gel as the stationary phase and a mixture of acetonitrile and 0.1% phosphoric acid solution (16 : 84) as the mobile phase. As detector a spectrophotometer set at 360 nm. The number of theoretical plates of the column is not less than 3000, calculated with reference to the peak of hyperoside.

Reference solution Dissolve a quantity of hyperoside CRS, accurately weighed, in methanol to produce a solution containing 32 μg of hyperoside per ml.

Test solution Weigh accurately 0.4 g of the coarse powder (through No. 3 sieve) in a stopper conical flask. Add accurately 50 ml of 60% ethanol, weigh, heat on a water bath for 1 hour, cool, weigh again, replenish the loss of

the weight with 60% ethanol, mix well and filter, use the successive filtrate as the test solution.

Procedure Inject accurately 10 μl of each of the reference solution and the test solution, respectively, into the column, and calculate the content.
It contains not less than 0.10 per cent of hyperoside ($C_{21}H_{20}O_{12}$), calculated with reference to the dried drug.

Action To soothe the liver to remove stagnancy of *liver-qi*, clear *heat* and eliminate *dampness*, reduce swelling and relieve pain.

Indications Depression due to stagnancy of liver-qi, swollen and painful joints, and difficulty in micturition.

Usage and dosage 2-3 g.

Herba Inulae (金沸草, Jinfeicao)

Inula Herb

Inula Herb is the dried aerial part of *Inula linariifolia* Turcz. or *Inula japonica* Thunb. (Fam. Compositae). The drug is collected in summer and autumn, and dried in the sun.

Description *Herb of Inula linariifolia* Stems cylindrical, branched at the upper part, 30-70 cm long, 0.2-0.5 cm in diameter; externally greenish-brown or dark brown, sparsely pubescent, with numerous fine longitudinal striations; texture fragile, fracture yellowish-white, pith hollowed. Leaves alternate, stripe-shaped or stripe-lanceolate, 5-10 cm long, 0.5-1 cm wide; acute at the apex, amplexicaul at the base, margin entire, edge curved; nearly glabrous on the upper surface, pubescent on the lower surface. Capitulum terminal, 0.5-1 cm in diameter, aigret white, about 0.2 cm long. Odour, slight; taste, slightly bitter.

Herb of Inula japonica Lamina oblong-lanceolate, 1-2.5 cm wide, edge not curved. Capitulum relatively large, 1-2 cm in diameter, aigret about 0.5 cm long.

Processing Eliminate foreign matter, wash briefly, cut into sections, and dry.

Action To relieve cough and dyspnea, and eliminate retained phlegm.

Indications Cough in common cold with retention of phlegm marked by dyspnea, profuse expectoration and feeling of stuffiness in the chest; external use in pyogenic infection of the skin.

Usage and dosage 4.5-9 g; appropriate quantity of the fresh herb is pounded into juice for topical application.

Storage Preserve in a dry place.

Herba Lamiophlomis (独一味, Duyiwei)

Common Lamiophlomis Root

Common Lamiophlomis Root is the dried herb of *Lamiophlomis rotata* (Benth.) Kudo (Fam. Labiatae), commonly used by the Tibertan nationality. The drug is collected at fruitage in autumn, washed clean, and dried in the sun.

Description Roots and rhizomes cylindrical, 1-4 cm long, 0.7-1.6 cm in diameter; externally yellowish-brown, with longitudinal furrows or wrinkles. Leaves alternatively opposite in lotus-shape, crumpled; when whole, lamina fan-shaped or triangular-ovate, 4-12 cm long, 5-15 cm wide, obtuse or rounded at the apex, shallowly cordate or decurrent into broadly cuneate at the base, margin rounded serrate, the upper surface greenish-brown, crumpled and uneven, the lower surface greyish-green; vein fan-shaped, veinlet reticulate and prominent; petiole broad and flattened. Infructescence somewhat tower-shaped or short conical, 3-6 cm long; persistent calyx brown, and tubularly campanulate, with 5 longitudinal ridges, the apex of calyx 5-toothed, with long spines. Small nutlets obovate-triangular. Odour, slight; taste, slightly astringent, and bitter.

Identification (1) Powder: Dark brown. Non-glandular hairs numerous, 2-3-celled, 10-15 μm in diameter, walls relatively thickened, with warty prominences. Mesophyll cells irregular, containing numerous needle crystals of calcium oxalate, 7-10 μm long. Stomata diacytic or anisocytic. Fibres long spindle-shaped, pit canals transverse and lobed.
(2) To 1 g of the powder add 10 ml of ethanol, heat under reflux for 15 minutes, and filter, use the filtrate as the test solution. Prepare a solution with 1 g of Herba Lamiophlomis reference drug in the same manner as the reference drug solution. Carry out the method for thin layer chromatography (Appendix Ⅵ B), using silica gel G as the coating substance and a mixture of chloroform and methanol (4 : 1) as the mobile phase. Apply separately to the plate 5-10 μl of the test solution and 5 μl of the reference drug solution. After developing and removal of the plate, dry in air. Spray with phosphomolybdic acid TS, heat at 105℃ to the spots clear. The spots in the chromatogram obtained with the test solution correspond in position and colour to the spots in the chromatogram obtained with the reference drug solution.

Water Not more than 12.0 per cent (Appendix Ⅸ H, method 1).

Total ash Not more than 12.0 per cent (Appendix Ⅸ K).

Acid-insoluble ash Not more than 4.0 per cent (Appendix Ⅸ K).

Extractives Carry out the method for determination of ethanol-soluble extractives (Appendix Ⅹ A, the hot extraction method), using 70% ethanol as the solvent, not less than 20.0 per cent.

Assay Carry out the method for high performance liquid chromatography (Appendix Ⅵ D).

Chromatographic system and system suitability Use octadecylsilane bonded silica gel as the stationary phase and a mixture of methanol and 0.4% phosphoric acid solution (55 : 45) as the mobile phase. As detector a spectrophotometer set at 350 nm. The number of theoretical plates of the column is not less than 1500, calculated with reference to the peak of luteolin.

Reference solution Dissolve a quantity of luteolin CRS, accurately weighed, in methanol to produce a solution containing 20 μg per ml.

Test solution Weigh accurately 1 g of the coarse powder (through No. 3 sieve) in a stopper conical flask. Add accurately 25 ml of 2.5 mol/L hydrochloric acid in methanol, weigh, heat on a water bath for 30 minutes, cool, weigh again, replenish the loss of the weight with 2.5 mol/L hydrochloric acid in methanol, mix well and filter. Measure accurately 2 ml of the successive filtrate to a 10 ml volumetric flask, dilute with methanol to volume and mix well.

Procedure Inject accurately 20 μl of each of the reference solution and the test solution, respectively, into the column, and calculate the content.
It contains not less than 0.15 per cent of luteolin ($C_{15}H_{10}O_6$), calculated with reference to the dried drug.

Processing Eliminate foreign matter, cut into pieces.

Action To promote blood flow to stop bleeding, eliminate *wind*, relieve pain and cure impetigo.

Indications Traumatic injuries and bleeding, rheumatic arthralgia and impetigo.

Usage and dosage 2-3 g.

Storage Preserve in a ventilated and dry place.

Herba Leonuri
(益母草, Yimucao)

Motherwort Herb

Motherwort Herb is the fresh or dried aerial part of *Leonurus japonicus* Houtt. (Fam. Labiatae). The fresh herb is collected from spring when seedling to early summer before flowering; The dried herb is collected in summer when foliage branch growing luxuriantly before or at the beginning of flowering, dried in the sun or dried after cutting into sections.

Description *Fresh herb of Leonurus japonicus* Herb in seedling absent of stem, basal leaves rounded-cordate, margin 5-9 lobated, lobes 2-3 serrated. Stems before flowering square, frequently branched at the upper part, furrowed longitudinally on 4 sides, 30-60 cm long, 0.2-0.5 cm in diameter; externally dark green; texture fresh and tender, fracture medullated in the centre. Leaves alternately opposite, petioled, lamina dark green, texture fresh and tender, occurring juice on being crumpled. The lower leaves palmately ternate, the upper leaves pinnatipartite or pinnatilobately ternate, lobes entire or slightly serrate. Odour, slight; taste, slightly bitter.

Dried herb of Leonurus japonicus Stems externally greyish-green or yellowish-green; texture light and pliable, fracture medullated in the centre. Lamina greyish-green, mostly crumpled and broken, easily fallen off. Verticillaster axillary, florets pale purple, calyx tubular, corolla bilabiated. Cutting sections about 2 cm long.

Identification (1) Transverse section of stem: Epidermal cells covered with cuticle at outer walls, pubescent, glandular scales with a 4-, 6- or 8-celled head and an unicellular stalk; non-glandular hairs 1- to 4-celled. Hypodermal collenchymatous cells abundant in the angular region. Cortex consisting of several layers of parenchymatous cells; endodermis distinct. Pericyclic fibre bundles slightly lignified. Phloem relatively narrow. Xylem well developed in the angular region. Meddulary parenchymatous cells relatively large. Parenchymatous cells containing minute needle crystals of calcium oxalate and small prisms. Cortex parenchymatous cells near epidermis containing chromoplasts for the fresh herb.
(2) To 3 g of the powder (pulverized after drying for the fresh herb) add 30 ml of ethanol, heat under reflux for 1 hour, allow to cool, filter, and concentrate the filtrate to 5 ml. Apply the concentrate to a small column (10 mm in internal diameter) packed with 0.5 g of activated charcoal and 2 g of neutral aluminium oxide (100-120 mesh), elute with 30 ml of ethanol and evaporate the eluate to dryness. Dissolve the residue in 0.5 ml of ethanol as the test solution. Dissolve stachydrine hydrochloride CRS in ethanol to produce a solution containing 5 mg per ml as the reference solution. Carry out the method for thin layer chromatography (Appendix VI B), using silica gel G as the coating substance and a mixture of *n*-butanol, hydrochloric acid and water (4 : 1 : 0.5) as the mobile phase. Apply separately to the plate 10 μl of each of the above two solutions. After developing and removal of the plate, dry in air, spray with dilute potassium iodobismuthate TS. The spot in the chromatogram obtained with the test solution corresponds in position and colour to the spot in the chromatogram obtained with the reference solution.

Water *Dried herb of Leonurus japonicus* Not more than 13.0 per cent (Appendix Ⅸ H, method 1).

Total ash *Dried herb of Leonurus Japonicus* Not more than 11.0 per cent (Appendix Ⅸ K).

Acid-insoluble ash *Dried herb of Leonurus japonicus* Not more than 1.0 per cent (Appendix Ⅸ K).

Extractives *Dried herb of Leonurus japonicus* Carry out the method for determination of water-soluble extractives (Appendix Ⅹ A, the hot extraction method), not less than 15.0 per cent.

Assay *Dried herb of Leonurus japonicus* Weigh accurately about 1 g of the powder (through No. 2 sieve), in a stopper conical flask, add 50 ml of ethanol, heat on a water bath for 1.5 hours, allow to cool and filter. Wash the residue and the flask several times with 50 ml of ethanol, filter. Combine the filtrate and washings, evaporate to dryness. Dissolve the residue in ethanol, transfer to a 10 ml volumetric flask, dilute with ethanol to volume, mix well and centrifuge (5000 r/min, 5 minutes), use the supernatant as the test solution. Dissolve stachydrine hydrochloride CRS, previously dried 3 hours at 105℃ and accurately weighed, in ethanol to produce a solution containing 2 mg per ml as the reference solution. Carry out the method for thin layer chromatography (Appendix Ⅸ B), using silica gel G mixed with sodium carboxymethylcellulose as the coating substance and a mixture of ethyl acetate, *n*-butanol and hydrochloric acid (1 : 8 : 3) as the mobile phase. Apply accurately to the plate 8 μl of the test solution, 3 μl and 8 μl of the reference solution alternatively. After developing and removal of the plate, dry in air, heat at 105℃ for 15 minutes, allow to cool, and spray with a mixed solution of dilute potassium iodobismuthante TS and 1% ferric chloride TS (10 : 1) to the spots clear, dry in air. Cover the plate with a glass plate of same size, fix up with adhesive plaster. Carry out the method for thin layer chromatography (Appendix Ⅵ A, thin layer chromatography scanning method), scan at the wavelength of $\lambda s = 510$ nm. Measure the integration values of absorbance from the test solution and the reference solution respectively, and calculate the content.
It contains not less than 0.50 per cent of stachydrine hydrochloride ($C_7H_{13}NO_2 \cdot HCl$), calculated with reference to the dried drug.

Processing *Fresh Motherwort Herb* Eliminate foreign matter, wash clean rapidly.

Dried Motherwort Herb Eliminate foreign matter, wash clean rapidly, soften thoroughly, cut into sections, and dry.

Action To regulate menstruation by activating blood circulation, and induce urination.

Indications Menstrual disorders, dysmenorrhea, amenorrhea, incessant drippling of lochia; edema and oliguria such as edema in acute nephritis.

Usage and dosage 9-30 g of the dried herb; 12-40 g of the fresh herb.

Precaution Contraindicated in pregnancy.

Storage Preserve the dried drug in a dry place; and the fresh herb in a cool and moist place.

Preparation (1) Extractum Leonuri Liquidum
(2) Extractum Leonuri Inspissatum

Herba Lobeliae Chinensis (半边莲, Banbianlian)

Chinese Lobelia Herb

Chinese Lobelia Herb is the dried herb of *Lobelia chinensis* Lour. (Fam. Campanulaceae). The drug is collected in summer, removed from soil, washed clean, and dried in the sun.

Description Usually winded up into masses. Rhizomes 1-2 mm in diameter, externally pale brownish-yellow, smooth or finely striated longitudinally. Roots slender, yellow, bearing lateral rootlets. Stems slender, branched, greyish-green, with obvious nodes, some bearing fibrous roots. Leaves alternate, sessile, lamina mostly crumpled, greenish-brown, when whole, narrowly lanceolate, 1-2.5 cm long, 2-5 mm wide, margin sparsely and shallowly serrate. Pedicels slender, flowers small, solitary and axillary, corolla tubular at the base, 5-lobed at the upper part, oblique on one side, pale purplish-red, with white pubescences inside the corolla tube. Odour, slight, characteristic; taste, slightly sweet and pungent.

Identification (1) Powder: Greyish-greenish-yellow or pale brownish-yellow. The anticlinal walls of leaf epidermal cells slightly sinuous, stomata anomocytic, subsidiary cells 3-7. Spiral vessels and reticulate vessels frequently visible, 7-34 μm in diameter. Clusters of calcium oxalate frequently occurring beside vessels, sometimes arranged in rows. Laticiferous vessels visible, containing granular and oily contents. Parenchymatous cells containing inulin.
(2) To 1 g of the powder add 50 ml of methanol, ultrasonicate for 30 minutes, cool and filter. Evaporate the filtrate to dryness, and dissolve the residue in 2 ml of methanol as the test solution. Prepare a solution with 1 g of Herba Lobeliae Chinensis reference drug in the same manner as the reference drug solution. Carry out the method for thin layer chromatography (Appendix Ⅳ B), using silica gel G as the coating substance and a mixture of chloroform and methanol (9 : 1) as the mobile phase. Apply separately to the plate 5 μl of each of the above two solutions. After developing and removal of the plate, dry in air. Spray with 10% sulfuric acid in ethanol and heat at 105℃ to the spots clear. Examine in daylight and under ultraviolet light at 365 nm respectively. The spots or fluorescent spots in the chromatogram obtained with the test solution correspond in position and colour to the spots or fluorescent spots in the chromatogram obtained with the reference drug solution.

Water Not more than 13.0 per cent (Appendix Ⅸ H, method 1).

Extractives Carry out the method for determination of water-soluble extractives (Appendix Ⅹ A, the hot extraction method), not less than 35.0 per cent.

Processing Eliminate foreign matter, wash clean, cut into sections and dry in the sun.

Action To induce urination, and to remove toxic *heat*.

Indications Anasarca and ascites; carbuncles, boils and snake or insect bite; ascites in late schistomiasis.

Usage and dosage 9-15 g.

Storage Preserve in a dry place.

Herba Lophatheri (淡竹叶, Danzhuye)

Lophatherum Herb

Lophatherum Herb is the dried stem and leaf of *Lophatherum gracile* Brongn. (Fam. Gramineae). The drug is collected before the rachis emerges in summer and dried in the sun.

Description 25-75 cm long. Stems cylindrical, nodiferous, externally yellowish-green, fracture hollowed. Leaf sheaths dehiscent. Lamina lanceolate, some crumpled and rolled, 5-20 cm long, 1-3.5 cm wide; surface pale green or yellowish-green, veins parallel, bearing lateral veinlets, forming rectangular reticulate venation, more distinct on the lower surface. Texture light, pliable. Odour, slight; taste, weak.

Identification Surface view of leaf: Epidermal cells of the upper epidermis rectangular or subsquare, with sinuous anticlinal walls, showing rounded palisade cells beneath. The long cells and short cells of the lower epidermis alternately arranged or several connected; the long cells rectangular, with sinuous anticlinal walls; the short cells dumb-bell shaped, being silica cells and suberized cells, a string of short cells occurring near veins. Stomata numerous, guard cells dumb-bell shaped, subsidiary cells subrounded-triangular. Non-glandular hairs of three types, one type unicellular, long, the other unicellular, short conical, occasionally with the third type, bicellular, short and small.

Processing Eliminate foreign matter, and cut into sections.

Action To remove *heat*, ease the mind and induce urination.

Indications Fidgetness and thirst in febrile diseases; dysuria with dark urine and painful urination, ulcers in the mouth or on the tongue.

Usage and dosage 6-9 g.

Storage Preserve in a dry place.

Herba Lycopi (泽兰, Zelan)

Hirsute Shiny Bugleweed Herb

Hirsute Shiny Bugleweed Herb is the dried aerial part of *Lycopus lucidus* Turcz. var. *hirtus* Regel (Fam. Labiatae). The drug is collected in summer and autumn when foliage branch growing luxuriantly, and dried in the sun.

Description Stems square, infrequently branched, shallowly furrowed longitudinally on four sides, 50-100 cm long, 2-6 mm in diameter; externally yellowish-green or purplish, nodes apparently purple, white-tomentose; texture fragile, fracture yellowish-white, pith hollowed. Leaves opposite, short petioled; lamina mostly crumpled, when whole, lanceolate or oblong, 5-10 cm long; the upper surface

blackish-green, the lower surface greyish-green and densely glandular-dotted, pubescent on both surfaces; apex acute, margin serrate. Flowers, aggregated in leaf axils in verticillate cymes, corolla mostly fallen off, bracts and calyx persistent, yellowish-brown. Odour, slight; taste, weak.

Identification To 1 g of the powder add 30 ml of acetone, heat under reflux for 30 minutes, and filter. Evaporate the filtrate to dryness, to the residue add 10 ml of petroleum ether (30-60℃) and macerate for about 2 minutes. Pour out the petroleum ether and evaporate the solution to dryness. Dissolve the residue in 2 ml of dehydrated ethanol as the test solution. Dissolve ursolic acid CRS in dehydrated ethanol to produce a solution containing 0.5 mg per ml as the reference solution. Carry out the method for thin layer chromatography (Appendix Ⅵ B), using silica gel G as the coating substance and a mixture of cyclohexane, chloroform, ethyl acetate and formic acid (20 : 5 : 8 : 0.1) as the mobile phase. Apply separately to the plate 2-4 μl of the test solution and 2 μl of the reference solution. After developing and removal of the plate, dry in air. Spray with 10% solution of sulfuric acid in ethanol and heat at 105℃ to the spots clear. The spot in the chromatogram obtained with the test solution corresponds in position and colour to the spot in the chromatogram obtained with the reference solution.

Processing Eliminate foreign matter, wash briefly, soften thoroughly, cut into sections and dry.

Action To activate blood circulation and eliminate blood stasis, and to induce diuresis.

Indications Menstrual disorders, amenorrhea, dysmenorrhea, postpartum abdominal pain due to blood stasis; edema.

Usage and dosage 6-12 g.

Storage Preserve in a ventilated and dry place.

Herba Lycopodii (伸筋草, Shenjincao)

Common Clubmoss Herb

Common Clubmoss Herb is the dried herb of *Lycopodium japonicum* Thunb. (Fam. Lycopodiaceae). The drug is collected in summer and autumn when foliage branch growing luxuriantly, removed from foreign matter, and dried in the sun.

Description Stolons slender cylindrical, slightly curved, up to 2 m long, 1-3 mm in diameter, with yellowish-white rootlets underneath. Erect stems bifurcated. Leaves densely growing on the stems, spirally arranged, crumpled and curved, linear or needle-shaped, 3-5 mm long, yellowish-green to pale yellowish-brown, glabrous, aristate at the apex, margin entire, easily broken. Texture soft, fracture pale yellow in bark and whitish in wood. Odour, slight; taste, weak.

Identification (1) Transverse section of stem: Epidermal cells of 1 layer. Cortex broad, scattered with leaf trace bundles, occurring 10-20 or more layers of sclerenchymatous cells below the epidermis and outside the stele respectively, and 3-5 layers of parenchymatous cells with slightly thickened walls between them; endodermis indistinct. Pericycle consisting of several layers of parenchymatous cells, bundles of xylem irregularly stripe-shaped or branched, intermingled with bundles of phloem, some cells containing yellowish-brown contents.

(2) To 1 g of the powder add 15 ml of ether, allow to macerate overnight, filter, evaporate the filtrate to dryness, and dissolve the residue in 1 ml of anhydrated ethanol as the test solution. Prepare a solution with 1 g of Herba Lycopodii reference drug in the same manner as the reference drug solution. Carry out the method for thin layer chromatography (Appendix Ⅵ B), using sillica gel G as the coating substance and a mixture of chloroform and methanol (40 : 1) as the mobile phase. Apply separately to the plate 5 μl of each of the above two solutions. After developing and removal of the plate, dry in air. Spray with 5% sulfuric acid in ethanol, heat at 105℃ to the spots clear. The spots in the chromatogram obtained with the test solution correspond in position and colour to the spots in the chromatogram obtained with the reference drug solution.

Processing Eliminate foreign matter, wash clean, cut into sections, and dry.

Action To relieve rheumatic condition and muscular contracture.

Indications Arthralgia with immobilized joints.

Usage and dosage 3-12 g.

Storage Preserve in a dry place.

Herba Lysimachiae (金钱草, Jinqiancao)

Christina Loosestrife

Christina Loosestrife is the dried herb of *Lysimachia christinae* Hance (Fam. Primulaceae). The drug is collected in summer and autumn, removed from foreign matter, and dried in the sun.

Description Frequently twisted into masses, glabrous or sparsely pubescent. Stems twisted, externally brown or dark brownish-red, striated longitudinally, stem nodes of the lower part sometimes with rootlets, fracture solid. Leaves opposite, mostly crumpled, when whole, broadly ovate or cordate, 1-4 cm long, 1-5 cm wide, base slightly concave, margin entire; the upper surface greyish-green or dark brown, the lower surface pale in colour, midrib distinctly prominent, after soaking in water, the black or brown stripes visible under the light; petioles 1-4 cm long. Some with flowers, yellow, solitary and axillary, long-petioled. Capsules globose. Odour, slight; taste, weak.

Identification (1) Transverse section of stem: Epidermal cells covered with cuticle, glandular hairs sometimes found, with an unicellular head and a 1-2-celled stalk. Cortex broad, sometimes cells containing reddish-brown secretion; secretory canals scattered, surrounded by 5-10 secretory cells, containing reddish-brown lumpy secretion. Endodermis distinct. Pericyclic fibres arranged in an interrupted ring, walls slightly lignified. Phloem narrow. Xylem ringed. Pith usually hollowed. Parenchymatous cells containing starch granules.

Surface view of leaf: Glandular hairs reddish-brown, with a subrounded unicellular head, about 25 μm in diameter, and an unicellular stalk. Secretory canals scattered throughout mesophyll, about 45 μm in diameter, containing reddish-brown secretion. For sparsely pubescent ones, nonglandular hairs visible on the surface of stems and leaves, 1-17-celled, straight or curved, some cells shrunken, 59-1070 μm long, 13-53 μm in diameter at the base, finely striated on the surface, containing yellowish-brown contents.

(2) To 1 g of the powder add 50 ml of 80% methanol, heat under reflux for 1 hour, cool, and filter. Evaporate the filtrate to dryness. Dissolve the residue in 10 ml of water, extract with two 10-ml quantities of ether, and discard the ether solutions. To the water solution add 10 ml of dilute hydrochloric acid, heat on a water bath for 1 hour, cool immediately, and extract with two 20-ml quantities of ethyl acetate, combine the ethyl acetate extracts, and wash with 30 ml of water, discard the washing. Evaporate the ethyl acetate extract to dryness, and dissolve the residue in 1 ml of methanol as the test solution. Dissolve quercetin CRS and kaempferol CRS in methanol to produce a mixture containing 0.5 mg of each per ml as the reference solution. Carry out the method for thin layer chromatography (Appendix Ⅵ B), using silica gel G as the coating substance and a mixture of toluene, ethyl formate and formic acid (10 : 8 : 1) as the mobile phase. Apply separately to the plate 5 μl of the test solution and 2 μl of the reference solution. After developing and removal of the plate, dry in air. Spray with 3% aluminium trichloride in ethanol, heat at 105℃ for several minutes, examine under ultraviolet light at 365 nm. The fluorescent spots in the chromatogram obtained with the test solution correspond in position and colour to the spots in the chromatogram obtained with the reference solution.

Foreign matter Not more than 8 per cent (Appendix Ⅸ A).

Water Not more than 13.0 per cent (Appendix Ⅸ H, method 1).

Total ash Not more than 13.0 per cent (Appendix Ⅸ K).

Acid-insoluble ash Not more than 5.0 per cent (Appendix Ⅸ K).

Extractives Carry out the method for determination of ethanol-soluble extractives (Appendix Ⅹ A, the hot extraction method), using 75% ethanol as the solvent, not less than 8.0 per cent.

Assay Carry out the method for high performance liquid chromatography (Appendix Ⅵ D).

Chromatographic system and system suitability Use octadecylsilane bonded silica gel as the stationary phase and a mixture of methanol and 0.4% phosphoric acid solution (50 : 50) as the mobile phase. As detector a spectrophotometer set at 360 nm. The number of theoretical plates of the column is not less than 2500, calculated with reference to the peak of quercetin.

Reference solution Dissolve a quantity of quercetin CRS and kaempferol CRS, accurately weighed, in 80% methanol to produce a solution containing 4 μg of quercetin and 20 μg of kaempferol per ml as the reference solution.

Test solution Weigh accurately 1.5 g of the coarse powder (through No. 3 sieve) in a stopper conical flask. Add accurately 50 ml of 80% methanol, weigh, heat on a water bath for 1 hour, cool, weigh again, replenish the loss of the weight with 80% methanol, mix well and filter. Measure accurately 25 ml of the successive filtrate, add accurately 5 ml of hydrochloric acid, heat on a water bath at 90℃ for 1 hour, cool immediately. Transfer to a 50 ml volumetric flask, dilute with 80% methanol to volume and mix well.

Procedure Inject accurately 10 μl of each of the reference solution and the test solution, respectively, into the column, and calculate the content.
It contains not less than 0.10 per cent of the total amount of quercetin ($C_{15}H_{10}O_7$), and kaempferol ($C_{15}H_{10}O_6$), calculated with reference to the dried drug.

Processing Eliminate foreign matter, wash briefly, cut into sections, and dry in the sun.

Action To remove *damp-heat*, relieve dysuria, and reduce swelling.

Indications Acute urinary infection or urolithiasis with difficult painful urination; jaundice with dark urine, hepatic or biliary calculus; carbuncles, sores, venomous snake bite.

Usage and dosage 15-60 g of the dried herb or 30-120 g of the fresh herb.

Storage Preserve in a dry place.

Herba Menthae (薄荷, Bohe)

Peppermint

Peppermint is the dried aerial part of *Mentha haplocalyx* Briq. (Fam. Labiatae). The drug is collected in summer and autumn when foliage branch growing luxuriantly or in the third round of flowering, collected in several times on fine days, and dried in the sun or in the shade.

Description Stems square, with opposite branches, 15-40 cm long, 2-4 mm in diameter; externally purplish-brown or pale green, the angular regions pubescent, internodes 2-5 cm long; texture fragile, fracture white, pith hollowed. Leaves opposite, short petioled, lamina crumpled and rolled, when whole, broadly lanceolate, long-elliptical or ovate, 2-7 cm long, 1-3 cm wide; the upper surface dark green and the lower surface greyish-green, sparsely pubescent, bearing concavely dotted glandular scales. Verticillaster axillary, calyx campanulate, with five terminal teeth, corolla pale purple. Odour, characteristic and aromatic after rubbing; taste, pungent and cool.

Identification (1) Surface view of leaf: Glandular scales with a 8-celled head, up to 90 μm in diameter, and an unicellular stalk; small glandular hairs with an unicellular head and an unicellular stalk. Non-glandular hairs 1-8 celled, often curved, walls thickened, and slightly warty. Stomata diacytic, numerous on the lower surface.
(2) To the oily matter obtained from the microsublimation of the leaf powder add 2 drops of sulfuric acid and a small quantity of vanillin crystal, a yellow to orange-yellow colour is produced, turning to purplish-red on adding 1 drop of water.
(3) To 0.5 g of the powder add 5 ml of petroleum ether (60-90℃), stopper well, shake for several minutes, allow to stand for 30 minutes, filter and use the filtrate as the test solution. Dissolve menthol CRS in petroleum ether to produce a solution containing 2 mg per ml as the reference solution. Carry out the method for thin layer chromatography (Appendix Ⅵ B), using silica gel G as the coating substance and a mixture of benzene and ethyl acetate (19 : 1) as the mobile phase. Apply separately to the plate 10-20 μl of the test solution and 10 μl of the reference solution. After developing and removal of the plate, dry in air. Spray with a mixture of vanillin in sulfuric acid TS and ethanol (2 : 8). Heat at 100℃ to the spots clear. The spot in the chromatogram obtained with the test solution corresponds in position and colour to the spot in the chromatogram obtained with the reference solution.

Leaves Not less than 30 per cent.

Assay Carry out the method for determination of volatile oil (Appendix Ⅹ D). To a sufficient quantity of 5 mm long short sections, add 600 ml of water per 100 g, boil gently for 3 hours, and determine the content of volatile oil.

It contains not less than 0.80 per cent (ml/g) of volatile oil.

Processing Remove the old stems and foreign matter, spray with a small quantity of water, soften briefly, cut into short sections, and dry at a low temperature in time.
Mostly short sections, 5-8 mm long, dark green, purplish-brown or greyish-brown. Carry out the method for determination of volatile oil as described under the Assay.
It contains not less than 0.4 per cent (ml/g) of volatile oil.

Action To expel *wind-heat* from the head and eyes, and promote eruptions.

Indications Headache in influenza, upper respiratory infection and other epidemic febrile diseases at the initial stage; inflammation of eyes, sore throat, ulcers in the mouth; rubella measles; discomfort and distension in the chest and hypochondriac regions.

Usage and dosage 3-6 g, added to the decoction when it is nearly done.

Storage Preserve in a cool and dry place.

Herba Moslae
(香薷, Xiangru)

Chinese Mosla

Chinese Mosla is the dried aerial part of *Mosla chinensis* Maxim. or *Mosla chinensis* 'Jiangxiangru' (Fam. Labiatae). The former is called as 'Qingxiangru' and the later is called as 'Jiangxiangru'. The drug is collected on fine days of summer when foliage branch growing luxuriantly and flowers in full blossom, removed from foreign matter, and dried in the shade.

Description *Qingxiangru* 30-50 cm long, the basal part purplish-red, the upper part yellowish-green or pale yellow, whole plant densely white pubescent. Stems square, subround at base, 1-2 mm in diameter, nodes distinct, internodes 4-7 cm long; texture fragile, easily broken. Leaves opposite, mostly crumpled or fallen off, when whole, lamina long-ovate or lanceolate, dark green or yellowish-green, margin 3-5 sparsely lobed. Spike terminal and axillary; bracts round-ovate or reversed round-ovate, fallen off or remained; calyx persistent, campanulate, pale purplish-red or greyish-green, apex 5-lobed, densely pubescent. Nutlets 4, 0.7-1.1 mm in diameter, subspherical, with reticulate striations. Odour, intensely aromatic; taste, cool and slightly pungent.

Jiangxiangru 55-66 cm long. Externally yellowish-green, texture soft. Lamina margin 5-9 sparsely lobed. Nutlets 0.9-1.4 mm in diameter, with sparse reticulate striations.

Identification (1) Surface view of leaf:

Qingxiangru The upper epidermal cells polygonal, anticlinal walls sinuous and slightly thickened, glandular scales with a 8-celled head and an unicellular stalk, 36-74-80 μm in diameter; walls of the lower epidermal cells not thickened, glandular sales 70-80 μm in diameter. Stomata diacytic, more frequently observed on the lower surface. Non-glandular hairs on the upper and lower epidermis mostly 2-celled, the upper cells frequently hook-like, warty protrudings distinct. Pericarpial epidermis with sockets densely, cells in the sockets flat and densely arranged.

Jiangxiangru Glandular scales on the upper epidermis 90 μm in diameter; non-glandular hairs 2-3-celled, the lower cells longer than the upper cells, warty protrudings indistinct, basal cells of non-glandular hairs 5-6, with beaded-thickened anticlinal walls. Pericarpial epidermal cells polygonal, densely with hollowed reticulations. Small glandular hairs visible. Fibre bundles reticulately arranged.
(2) Dissolve volatile oil obtained under the Assay in ether to produce a solution containing 3 μl per ml as the test solution. Dissolve thymol CRS and carvacrol CRS in ether to produce two solutions containing 1 mg of each per ml as the reference solutions. Carry out the method for thin layer chromatography (Appendix Ⅵ B), using silica gel G mixed with sodium carboxymethylcellulose as the coating substance and toluene as the mobile phase. Apply separately to the plate 5 μl of each of the above three solutions. After developing and removal of the plate, dry in air. Spray with 5% vanillin in sulfuric acid, heat at 105℃ to the spots clear. The spots in the chromatogram obtained with the test solution correspond in position and colour to the spots in the chromatogram obtained with the reference solutions.

Assay ***Volatile oil*** Carry out the method for determination of volatile oil (Appendix Ⅹ D), add 800 ml of water per 100 g of the herb (in 1 cm sections), keep gentle boiling for 4 hours. Not less than 0.60 per cent (ml/g).

Thymol and carvacrol Carry out the method for gas chromatography (Appendix Ⅵ E).

Chromatographic system and sytem suitability Use 10% polyethylene glycol (PEG) -20M as the stationary phase; maintain the column temperature at 190℃. The number of theoretical plates of the column is not less than 1700, calculated with reference to the peak of thymol.

Reference solution Weigh accurately 15 mg of thymol CRS and carvacrol CRS respectively, to a 50 ml volumetric flask, dissolve and dilute with anhydrous ethanol to volume, mix well.

Test solution Weigh accurately 2 g of the powder (through No. 2 sieve), to a stopper conical flask, add accurately 20 ml of anhydrous ethanol, weigh, shake for 5 minutes, macerate overnight, ultrasonicate (power 250 W, frequency 50 kHz) for 15 minutes, allow to cool, weigh again and compensate the loss of the weight with anhydrous ethanol, mix well, filter with a dried filter containing 1 g of activated charcoal, use the successive filtrate as the test solution.

Procedure Inject accurately 2 μl of each of the test solution and the reference solution, respectively, into the column, and calculate the content.
It contains not less than 0.16 per cent of the total amount of thymol ($C_{10}H_{14}O$) and carvacrol ($C_{10}H_{10}O$), calculated with reference to the dried drug.

Processing Remove remains of roots and foreign matter, cut into sections.

Action To induce diaphoresis, regulate the function of the spleen and the stomach, and remove *dampness* through diuresis.

Indications Attack by summer heat and *dampness* manifested by chills and fever, headache, abdominal pain, vomiting, diarrhea, oliguria and absence of sweating.

Usage and dosage 3-9 g.

Storage Preserve in a cool and dry place.

Herba Orostachyis Fimbriati
(瓦松, Wasong)

Fimbriate Orostachys Herb

Fimbriate Orostachys Herb is the dried aerial part of *Orostachys fimbriatus* (Turcz.) Berg. (Fam. Crassulaceae). The drug is collected at flowering in summer and autumn, removed from root and foreign matter, and dried in the sun.

Description Stems slenderly cylindrical, 5-27 cm long, 2-6 mm in diameter, externally greyish-brown, with numerous protuberant remains of leaf base, and distinct longitudinal ridge lines. Leaves mostly fallen off, crumbled or crumpled, greyish-green. Panicle spike-like, florets white or pink, pedicel about 5 mm long. Texture light and fragile, easily broken. Odour, slight; taste, sour.

Foreigh matter Not more than 2.0 per cent (Appendix Ⅸ A).

Water Not more than 13.0 per cent (Appendix Ⅸ H, method 1).

Extractives Carry out the method for determination of ethanol-soluble extractives (Appendix Ⅹ A, the hot extraction method), using ethanol as the solvent, not less than 3.0 per cent.

Assay Carry out the method for high performance liquid chromatography (Appendix Ⅵ D).

Chromatographic system and system suitability Use octadecylsilane bonded silica gel as the stationary phase and a mixture of methanol and 0.5% phosphoric acid solution (47 : 53) as the mobile phase. As detector a spectrophotometer set at 360 nm. The number of theoretical plates of the column is not less than 4000, calculated with reference to the peak of quercetin.

Reference solution Dissolve a quantity of quercetin CRS and kaempferol CRS, accurately weighed, in methanol to produce a mixture containing 10 μg of quercetin and 20 μg of kaempferol per ml respectively.

Test solution Weigh accurately 1 g of the powder (through No. 3 sieve), to a stopper conical flask, add accurately 50 ml of a mixture of methanol and 25% hydrochloric acid solution (4 : 1), weigh, heat on a water bath for 1 hour, cool immediately, weigh again, compensate the loss of the weight with methanol, mix well, filter, use the successive filtrate as the test solution.

Procedure Inject accurately 10 μl of the reference solution and 10-20 μl of the test solution, respectively, into the column, and calculate the content.
It contains not less than 0.020 per cent of the total amount of quercetin ($C_{15}H_{10}O_7$) and kaempferol ($C_{15}H_{10}O_6$), calculated with reference to the dried drug.

Processing Eliminate remains of roots and foreign matter, cut into sections.

Action To stop bleeding, clear toxin, and cure sores.

Indications Bloody dysentery, hemafecia, unhealed ulcer.

Usage and dosage 3-9 g; appropriate quantity for external use.

Storage Preserve in a ventilated and dry place.

Herba Plantaginis
(车前草, Cheqiancao)

Plantain Herb

Plantain Herb is the dried herb of *Plantago asiatica* L. or *Plantago depressa* Willd. (Fam. Plantaginaceae). The drug is collected in summer, removed from soil, and dried in the sun.

Description *Herb of Plantago asiatica* Roots fascicled, fibrous. Leaves basal, long petioled; lamina crumpled, when whole, ovate-elliptical or broadly ovate, 6-13 cm long, 2.5-8 cm wide; externally greyish-green or blackish-green, with 5-7 distinct arched veins; obtuse or acute at the apex, broadly cuneate at the base, margin entire or irregularly sinuate-dentate. Spikes several, with a long scape. Capsules circumscissile, calyx persistent. Odour, slightly aromatic; taste, slightly bitter.

Herb of Plantago depressa Main roots straight and long. Lamina relatively narrow, long-elliptical or elliptical-lanceolate, 5-14 cm long, 2-3 cm wide.

Identification Surface view of leaf:

Herb of Plantago asiatica The epidermal cells of both surfaces subrectangular, the upper epidermal cells with striated cuticle. Stomata anomocytic, subsidiary cells 3-4. Glandular hairs with an elliptical head of 2 cells, and an unicellular stalk. Non-glandular hairs infrequent, 2-5 celled, 100-320 μm long, with slightly thickened and faintly warty walls.

Herb of Plantago depressa Non-glandular hair 3-7 celled, 350-900 μm long.

Water Not more than 13.0 per cent (Appendix Ⅸ H, method 1).

Total ash Not more than 15.0 per cent (Appendix Ⅸ K).

Acid-insoluble ash Not more than 5.0 per cent (Appendix Ⅸ K).

Extractives Carry out the method for determination of water-soluble extractives (Appendix Ⅹ A, the hot extraction method), not less than 14.0 per cent

Processing Eliminate foreign matter, wash clean, cut into sections, and dry in the sun.

Action To remove *heat* and induce urination, promote expectoration, reduce *heat* in blood and counteract *toxicity*.

Indications Edema with oliguria; urinary infection with difficult painful urination; diarrhea caused by *summer-dampness*; cough caused by *phlegm-heat*; spitting of blood, epistaxis; carbuncles and sores.

Usage and dosage 9-30 g; or 30-60 g of the fresh herb decocted or pounded to obtain the juice for oral administration; appropriate quantity of the fresh herb is pounded into paste and applied topically.

Storage Preserve in a ventilated and dry place.

Herba Pogostemonis (广藿香, Guanghuoxiang)

Cablin Patchouli Herb

Cablin Patchouli Herb is the dried aerial part of *Pogostemon cablin* (Blanco) Benth. (Fam. Labiatae). The drug is collected when foliage branch growing luxuriantly, exposed to the sun in day and closed tightly at night repeatly until completely dried.

Description Stems somewhat square, frequently branched, branches slightly curved, 30-60 cm long, 2-7 mm in diameter; externally pubescent; texture fragile, easily broken, fracture medullated in the centre; old stems subcylindrical, 1-1.2 cm in diameter, covered with greyish-brown cork. Leaves opposite, crumpled into masses, when whole, ovate or elliptical, 4-9 cm long, 3-7 cm wide; greyish-white pubescent on both surfaces; apex short-acute or obtuse-rounded, base cuneate or obtusely rounded, margin irregularly serrate; petioles slender, 2-5 cm long, pubescent. Odour, aromatic, characteristic; taste, slightly bitter.

Identification (1) Powder of the leaf: Pale brown. Epidermal cells irregular, stomata diacytic. Non-glandular hairs 1 to 6-celled, straight or curved at the apex, up to 590 μm long, walls spinulous, some cells containing yellowish-brown masses. Glandular scales with an unicellular head, frequently window-shaped or cleft in surface view, 37-70 μm in diameter, and an unicellular, very short stalk. Intercellular glandular hairs occurring in the intercellular spaces of the palisade or parenchyma, with an unicellular head, irregularly saccular, 13-50 μm in diameter, up to about 113 μm long, and an unicellular, short stalk. Small glandular hairs with a bicellular head and a 1-3-celled, very short stalk. Needle crystals of calcium oxalate minute, scattered in mesophyll cells, up to about 27 μm long.

(2) Weigh sufficient quantity of the coarse powder, carry out the following tests with the volatile oil obtained as described under determination of volatile oil (Appendix Ⅹ D).

Dilute 0.5 ml of the volatile oil to 5 ml with ethyl acetate, as the test solution. Dissolve patchouli alcohol CRS in ethyl acetate to produce a solution containing 2 mg per ml as the reference solution. Carry out the method for thin layer chromatography (Appendix Ⅵ B), using silica gel G as the coating substance and a mixture of petroleum ether (30-60℃), ethyl acetate and glacial acetic acid (95 : 5 : 0.2) as the mobile phase. Apply separately to the plate 1-2 μl of each of the above two solutions. After developing and removal of the plate, dry in air. Spray with 5% ferric chloride in ethanol. The chromatogram obtained with the test solution shows a yellow spot; heat to the spots clear, a purplish-blue spot in the chromatogram obtained with the test solution corresponds in position and colour to the spot in the chromatogram obtained with the reference solution.

Foreign matter Not more than 2 per cent (Append Ⅸ A).

Water Not more than 14.0 per cent (Appendix Ⅸ H, method 2),

Total ash Not more than 11.0 per cent (Appendix Ⅸ K).

Acid-insoluble ash Not more than 4.0 per cent (Appendix Ⅸ K).

Leaves Not less than 20 per cent.

Extractives Carry out the method for determination of ethanol-soluble extractives (Appendix Ⅹ A, the cold maceration method), using ethanol as the solvent, not less than 2.5 per cent.

Assay Carry out the method for gas chromatography (Appendix Ⅵ E).

Chromatographic system and suitability Use a HP-5 capillary column (30 m × 0.32 mm × 0.25 μm); initial temperature at 150℃, maintain 23 minutes, then increase at 8℃ per minute to 280℃ and maintain 2 minutes. The injector temperature is 280℃; and the detector temperature is 280℃; The flow ratio is 20 : 1. The number of theoretical plates of the column is not less than 50000, calculate with reference to the peak of patchouli alcohol.

Correction factor Dissolve a quantity of *n*-octadecane, accurately weighed, in *n*-hexane to produce a solution containing 15 mg per ml as the internal standard solution. Dissolve 30 mg of patchouli alcohol CRS, accurately weighed, in a 10 ml volumetric flask, add accurately 1 ml of the internal standard solution, dilute with *n*-hexane to volume and mix well. Inject accurately 1 μl of the solution into column, calculate the correction factor for patchouli alcohol.

Procedure Weigh accurately 3 g of the coarse powder (through No. 4 sieve) in a conical flask. Add 50 ml of chloroform, ultrasonicate 3 times, 20 minutes each time, filter, combine the filtrate and evaporate to dryness, dissolve the residue in *n*-hexane in a 5 ml volumetric flask, add accurately 0.5 ml of the internal standard solution, add *n*-hexane to volume, and mix well. Inject accurately 1 μl of the solution into column and calculate the content.

It contains not less than 0.10 per cent of patchouli alcohol. ($C_{15}H_{26}O$), calculated with reference to the dried drug.

Processing Remove the remains of roots and foreign matter, collect the leaves, sift and set aside. Wash the stems clean, soften thoroughly, cut into sections and dry in the sun, then mix with the leaves.

Action To resolve *damp*, whet appetite, arrest vomiting, and release the exterior and expel *summer-dampness*.

Indications stuffiness in the epigastrium and vomiting due to *dampness* in the spleen and stomach; constriction in the chest and lassitude due to summer-dampness, abdominal pain, vomiting; sinusitis with headache due to cold, *dampness* and *summer-heat*.

Usage and dosage 3-9 g.

Storage Preserve in a cool and dry place, protected from moisture.

Herba Polygoni Avicularis (萹蓄, Bianxu)

Common Knotgrass Herb

Common Knotgrass Herb is the dried aerial part of *Polygonum aviculare* L. (Fam. Polygonaceae). The drug is collected in summer when leaf growing luxuriantly, removed from root and foreign matter, and dried in the sun.

Description Stems cylindrical and somewhat flattened, branched, 15-40 cm long, 2-3 mm in diameter. Externally greyish-green or brownish-red, with fine and slightly prominent longitudinal striations; nodes slightly swollen, with pale brown membranous stipulate sheaths, internodes about 3 cm long; texture hard, easily broken, fracture with

a white pith. Leaves alternate, almost sessile or short petioled; lamina frequently fallen off, crumpled or broken, when whole, lanceolate, margin entire, both surfaces brownish-green or greyish-green. Odour, slight; taste, slightly bitter.

Identification (1) Powder: Greyish-green. The epidermal cells on both surfaces of leaf with almost straight anticlinal and striated periclinal walls. Stomata mostly anisocytic, with 3 subsidiary cells. The transverse view of mesophyll showing isobilateral, parenchymatous cells containing clusters of calcium oxalate, 18-43 μm in diameter.
(2) To 5 g of the powder add 100 ml of 70% ethanol and 5 ml of hydrochloric acid, heat under reflux for 3 hours, filter, use the filtrate as the test solution. Dissolve quercitin CRS in ethanol to produce a solution containing 0.5 mg per ml as the reference solution. Carry out the method for thin layer chromatography (Appendix Ⅵ B) using silica gel H mixed with sodium carboxymethylcellulose as the coating substance and a mixture of toluene, ethyl acetate and formic acid (5 : 2 : 1) as the mobile phase. Apply separately to the plate 5 μl of the test solution and 1 μl of the reference solution. After developing and removal of the plate, dry in air. Spray with 1% aluminium trichloride solution. Examine under ultraviolet light at 365 nm. The fluorescent spot in the chromatogram obtained with the test solution corresponds in position and colour to the spot in the chromatogram obtained with the reference solution.

Processing Eliminate foreign matter, wash clean, cut into sections and dry.

Action To relieve dysuria, kill fungi and trichomonad and alleviate itching.

Indications Urinary infection with difficult painful urination, passage concentrated reddened urine and dribbling of urine after urination; eczema; vulval itching with morbid leukorrhea.

Usage and dosage 9-15 g; for external use, appropriate quantity is decocted for irrigation.

Storage Preserve in a dry place.

Herba Portulacae (马齿苋, Machixian)

Purslane Herb

Purslane Herb is the dried aerial part of *Portulaca oleracea* L. (Fam. Portulacaceae). The drug is collected in summer and autumn, removed from remains of roots and foreign matter, washed clean, steamed briefly or treated with boiling water, and then dried in the sun.

Description Mostly crumpled and rolled into masses. Stems cylindrical, up to 30 cm long, 1-2 mm in diameter; externally yellowish-brown, distinctly furrowed longitudinally. Leaves opposite or alternate, easily broken, when whole, obovate, 1-2.5 cm long, 0.5-1.5 cm wide; greenish-brown, obtuse or slightly notched at the apex, margin entire. Flowers small, 3-5, terminal at branchlets, petals 5, yellow. Capsules conical, about 5 mm long, with many minute seeds. Odour, slight; taste, slightly sour.

Identification To 2 g of the powder add 15 ml of hydrochloric acid solution in ethanol (1→20), heat under reflux for 10 minutes, and filter when hot. To 2 ml of the filtrate, add 1 ml of 3% sodium carbonate solution, heat for 3 minutes on a water bath, cool in ice-water, add a small quantity of activated charcoal, stir and filter. To the filtrate add 2 drops of freshly prepared diazotized *p*-nitroaniline TS, a red colour is produced.

Processing Eliminate foreign matter, wash clean, soften briefly, cut into sections, and dry in the sun.

Action To remove toxic *heat*, and arrest bleeding.

Indications Dysentery with bloody stools; boils and sores, eczema, erysipelas; snake or insect bite; hematochezia, hemorrhoidal bleeding, abnormal uterine bleeding.

Usage and dosage 9-15 g of the dried herb or 30-60 g of the fresh herb; appropriate quantity is pounded into paste for topical application.

Storage Preserve in a ventilated and dry place, protected from moisture.

Herba Potentillae Chinensis (委陵菜, Weilingcai)

Chinese Cinquefoil

Chinese Cinquefoil is the dried herb of *Potentilla chinensis* Ser. (Fam. Rosaceae). The drug is collected in spring before sprouting of stems, removed from soil, and dried in the sun.

Description Roots cylindrical or subconical, slightly twisted, sometimes branched, 5-17 cm long, 0.5-1 cm in diameter; externally dark brown or dark purplish-red, striated longitudinally, the coarse outer bark easily exfoliated, root stocks slightly swollen; texture hard, easily broken, bark in fracture thin, dark brown, easily separated from wood, rays arranged radially. Leaves basal, odd-pinnate, petioled; leaflets narrowly long-elliptical, margin pinnatipartite, the lower surface and petiole densely covered with greyish-white pubescences. Odour, slight; taste, astringent and slightly bitter.

Identification (1) Powder: Greyish-brown. Non-glandular hairs numerous, unicellular, straight or curved, some twisted into a mass, slender, 7-37 μm in diameter, up to about 4000 μm long, with thickened walls. Mesophyll cells containing clusters of calcium oxalate, 6-65 μm in diameter, and small prisms occasionally observed. Wood fibres long fusiform, 7-14 μm in diameter, walls slightly thickened and pit cannals distinct. Cork cells subpolygonal or flat-rectangular, containing yellowish-brown contents.
(2) To 1 g of the powder add 10 ml of petroleum ether (60-90℃), macerate warmly for 3 hours, filter, evaporate the filtrate to dryness, add 10 ml of ethanol to dissolve the residue, filter, and concentrate the filtrate to about 1 ml as the test solution. Prepare a solution with 1 g of Herba Potentillae Chinensis reference drug in the same manner as the reference drug solution. Carry out the method for thin layer chromatography (Appendix Ⅵ B), using silica gel G mixed with sodium carboxymethylcellulose as the coating substance and a mixture of toluene, ethyl formate and formic acid (5 : 4 : 1) as the mobile phase. Apply separately to the plate 6 μl of each of the above two solutions. After developing and removal of the plate, dry in air. Spray with a mixture of 2% ferric chloride solution and potassium ferricyanide TS mixed in equal portions. The blue spots in the chromatogram obtained with the test solution correspond in position and colour to the spots in the chromatogram obtained with the reference drug solution.

Processing Eliminate foreign matter, wash clean, soften thoroughly, cut into sections, and dry in the sun.

Action To remove toxic *heat* and *heat* in blood, and relieve dysentery.

Indications Dysentery with bloody stools, chronic dysentery; hemorrhoidal bleeding; carbuncles and sores.

Usage and dosage 9-15 g; appropriate quantity of the fresh herb is decocted for wash or pounded into paste for topical application.

Storage Preserve in a ventilated and dry place.

Herba Pyrolae (鹿衔草, Luxiancao)

Pyrola Herb

Pyrola Herb is the dried herb of *Pyrola calliantha* H. Andres or *Pyrola decorata* H. Andres (Fam. Pyrolaceae). The drug is collected all the year round, removed from foreign matter, dried in the sun until the leaf relatively soft, piled up until the leaf turns purplish-brown, and dried in the sun.

Description Rhizomes slender. Stems cylindrical or with longitudinal ridges, 10-30 cm long. Leaves basal, long-ovate or subrounded, 2-8 cm long, dark green or purplish-brown, apex rounded or slightly acute, margin entire or sparsely serrulate, edges slightly curved, the upper surface sometimes bearing white stripes along the veins, the lower surface sometimes covered with white powder. Racemes, flowers 4-10 or more, half-nodding, calyx 5, tongue-shaped or ovate-oblong; petals 5, deciduous, stamens 10, anthers with small angles at the base, dehiscing by terminal pores; style exerted, with a prominent and ring-shaped stigma disk. Capsules oblate, 7-10 mm in diameter, 5-dehiscent longitudinally, with spider-thread-shaped hairs on the edges of segments. Odour, slight; taste, weak, slightly bitter.

Identification Transverse section of leaf: Epidermal cells of the upper and lower epidermis subsquare, covered with cuticle. Stomata visible on the lower epidermis, collenchymatous cells 5-7 layers occurring on the inner side of lower epidermis, and 1-3 layers occurring on the inner side of upper epidermis. Palisade cells indistinct, spongy cells subrounded, containing clusters of calcium oxalate. The vascular bundles of midrib collateral, xylem crescent, phloem narrow, parenchymatous cells containing reddish brown or brownish-yellow substances.

Water Not more than 13.0 per cent (Appendix Ⅸ H, method 1).

Total ash Not more than 7.0 per cent (Appendix Ⅸ K).

Processing Eliminate foreign matter, and cut into sections.

Action To relieve rheumatic conditions, strengthen the tendons and bones, and arrest bleeding.

Indications Arthralgia weakness of the lower back and knees; menorrhagia; chronic phthisical cough.

Usage and dosage 9-15 g.

Storage Preserve in a dry place, protected from moisture.

Herba Sarcandrae (肿节风, Zhongjiefeng)

Glabrous Sarcandra Herb

Glabrous Sarcandra Herb is the dried herb of *Sarcandra glabra* (Thunb.) Nakai (Fam. Chloranthaceae). The drug is collected in summer and autumn, removed from foreign matter, and dried in the sun.

Description 50-120 cm long. Rhizomes relatively large, with numerous rootlets. Stems cylindrical, frequently branched, 0.3-1.3 cm in diameter; externally dark green to dark brown, with distinct fine longitudinal striations, longitudinal lenticels scattered, nodes swollen; texture fragile, easily broken, fracture medullated or hollowed. Leaves opposite, lamina ovate-lanceolate to ovate-elliptical, 5-15 cm long, 3-6 cm wide; externally green, greenish-brown to dark brown or brownish-red, glabrous, margin roughly serrate, the tips of serrations with blackish-brown glandular bodies, petiole about 1 cm long; texture nearly leathery. Spikes terminal, frequently branched. Odour, slightly aromatic; taste, slightly pungent.

Identification (1) Transverse section of stem: Epidermal cells subrectangular or oblong, covered with cuticle, edge obtusely dentate. Cortex cells 10 or more layers, the outer part occurring 2-3 layers of collenchymatous cells, parenchymatous cells in the inner part containing brownish-yellow contents, stone cells scattered singly or grouped. Pericyclic fibre bundles crescent, arranged in an interrupted ring, lignified. Phloem narrow. Xylem tracheids numerous, rays 2-8 cells wide. Parenchymatous cells of pith relatively large, sometimes stone cells visible, scattered singly or grouped.

Surface view of leaf: The anticlinal walls of epidermal cells sinuous or slightly straight, stomata slightly sunken, anomocytic.

(2) Place 0.5 g of the powder into a test tube, add a small quantity of zinc powder and 2 drops of 5% ammonium chloride solution. Heat gently to dryness, cover the tube mouth with a piece of filter paper moistened with a benzene solution containing 0.5% *p*-dimethylaminobenzaldehyde and 20% trichloroacetic acid, continue heating for about 1 minute, a pink to purple colour is produced on filter paper.

(3) To 2 g of the powder add 50 ml of water, ultrasonicate for 30 minutes, filter, extract the filtrate with two 25-ml quantities of ethyl acetate, combine the extracts and evaporate to dryness, dissolve the residue in 1 ml of methanol as the test solution. Prepare a solution with 2 g of Herba Sarcandrae reference drug in the same manner as the reference drug solution. Dissolve isofraxidin CRS in methanol to produce a solution containing 0.5 mg per ml as the reference solution. Carry out the method for thin layer chromatography (Appendix Ⅵ B), using silica gel G mixed with sodium carboxymethylcellulose as the coating substance and a mixture of toluene, ethyl acetate and formic acid (9 : 4 : 1) as the mobile phase. Apply separately to the plate 4 μl of each of the above three solutions. After developing and removal of the plate, dry in air, and examine under ultraviolet light at 365nm. The fluorescent spots in the chromatogram obtained with the test solution correspond in position and colour to the spots in the chromatograms obtained with the reference solution and the reference drug solution. The spot corresponding to the spot in the chromatogram obtained with the reference solution becomes

to yellowish-green on exposure to ammonia vapour for 10 minutes.

Water Not more than 15.0 per cent (Appendix Ⅸ H, method 1).

Total ash Not more than 10.0 per cent (Appendix Ⅸ K).

Acid-insoluble ash Not more than 2.0 per cent (Appendix Ⅸ K).

Extractives Carry out the method for determination of water-soluble extractives (Appendix Ⅹ A, the hot extraction method), not less than 10.0 per cent.

Assay Carry out the method for high performance liquid chromatography (Appendix Ⅵ D).

Chromatographic system and system suitability Use octadecylsilane bonded silica gel as the stationary phase and a mixture of acetonitrile and 0.1% phosphoric acid solution (20 : 80) as the mobile phase. As detector a spectrophotometer set at 344nm. The number of theoretical plates of the column is not less than 1200, calculated with reference to the peak of isofraxidin.

Reference solution Dissolve a quantity of isofraxidin CRS, accurately weighed, in methanol to produce a solution containing 4 μg per ml as the reference solution.

Test solution Weigh accurately 0.4 g of the powder (through No. 3 sieve) into a 100 ml volumetric flask, add 90 ml of water, allow to stand overnight. Ultrasonicate for 1.5 hours (power, 300W; frequency, 25kHz), cool, dilute with water to volume, shake thoroughly and filter. Measure accurately 25 ml of the successive filtrate, concentrate to almost dryness and add about 5 ml of water to dissolve, transfer to a separator. Extract with five 10-ml quantities of chloroform, combine the chloroform extracts and evaporate to dryness, dissolve the residue in methanol, transfer to a 10 ml volumetric flask, dilute with methanol to volume, and mix well.

Procedure Inject accurately 20 μl of each of the reference solution and the test solution, respectively, into the column, and calculate the content.
It contains not less than 0.020 per cent of isofraxidin ($C_{11}H_{10}O_5$), calculated with reference to the dried drug.

Processing Eliminate foreign matter, wash clean, soften thoroughly, cut into sections, and dry in the sun.

Action To reduce *heat* in the blood, activate blood circulation and remove ecchymoses, expel *wind* and remove obstruction from meridians.

Indications Purpura due to *heat* in the blood, impediment disease with pain due to *wind-dampness*, traumatic injuries.

Usage and dosage 9-30 g.

Storage Preserve in a ventilated and dry place.

Preparation (1) Glabrous Sarcandra Tablets.
(2) Glabrous Sarcandra Injection.
(3) Xuekang Oral Liquid.

Herba Saururi
(三白草, Sanbaicao)

Chinese Lizardtail Herb

Chinese Lizardtail Herb is the dried aerial part of *Saururus chinensis* (Lour.) Baill. (Fam. Saururaceae). The drug is collected all the year round, washed clean, and dried in the sun.

Description Stems cyclindrical, with four longitudinal furrows, one of them relatively broad. Fracture yellow, fibrous and hollow. Leaves simple, alternate, lamina ovate or ovate-lanceolate, 4-15 cm long, 2-10 cm wide, acuminate at apex, cordate at base, margin entire, 5-nerved at base, petiole relatively long, with longitudinal wrinkles. Racemes at the apex of branch, opposite to leaves, flowers small, dark brown. Capsules subspheroidal. Odour, slight; taste, weak.

Identification (1) Surface view of leaf: The cells of upper and lower epidermis somewhat polygonal, cuticle striations distinct, oil cells scattered in epidermis, rounded, 32-44 μm in diameter, and containing yellow oil drops. The upper epidermis without stomata, stomata numerous in lower epidermis, anomocytic, with glandular hairs, 2-3 celled, 40-70 μm long, and 12-16 μm in diameter of base.
Transverse section of stem: Epidermal cells subsquare. Collenchymatous cells of hypodermis mainly occurring under the ridges. Pericycle fibres of 3-4 rows, arranged in ring. Aerenchyma visible in cortex, consisting of subrounded parenchymatous cells, reticucately arranged, with large intercellular space, cortex scattered with oil cells and secretory ducts, oil cells containing oil drops, secretory ducts containing pale brown contents. Vascular bundles collateral, surrounded by fibre bundles, fibre bundles in the outer part arranged in an interrupted ring. Pith broad, aerenchyma visible; oil cells scattered. Clusters of calcium oxalate frequently occurring in parenchymatous cells, 12-25 μm in diameter.
(2) To 2 g of the powder add 10 ml of petroleum ether (60-90℃), macerate overnight, filter. and allow to dry spontaneously, a specific aromatic odour is produced. Add 1% vanillin in sulfuric acid, a red colour appears, which turns to bluish-purple on standing.
(3) To 2 g of the powder add 30 ml ethanol, heat under reflux for 1 hour, and filter. Evaporate the filtrate to dryness, and dissolve the residue in 2 ml of ethanol as the test solution. Prepare a solution with 2 g of Herba Saururi reference drug in the same manner as the reference drug solution. Carry out the method for thin layer chromatography (Appendix Ⅵ B), using silica gel G as the coating substance and a mixture of petroleum ether (60-90℃) and acetone (5 : 2) as the mobile phase. Apply separately to the plate 5 μl of each of the above two solutions. After developing and removal of the plate, dry in air. Examine under ultraviolet light at 365 nm. The main fluorescent spots in the chromatogram obtained with the test solution correspond in position and colour to the spots in the chromatogram obtained with the reference drug solution.

Foreign matter Not more than 3 per cent (Appendix Ⅸ A).

Water Not more than 15.0 per cent (Appendix Ⅸ H, method 1).

Total ash Not more than 11.0 per cent (Appendix Ⅸ K).

Acid-insoluble ash Not more than 4.0 per cent (Appendix Ⅸ K).

Extractives Carry out the method for determination of ethanol-soluble extractives (Appendix Ⅹ A, the hot extraction method), using dilute ethanol TS as the solvent, not less than 10.0 per cent.

Processing Eliminate foreign matter, wash clean, cut into sections, dry in the sun.

Action To remove toxic *heat*, and induce urination.

Indications Dysuria with painful difficult urination, urinary infection, nephritic edema; morbid leukorrhea; external use for boils, sores and eczema.

Usage and dosage 15-30 g; appropriate quantity of the fresh herb is pounded into paste for topical application.

Storage Preserve in a cool and dry place.

Herba Saussureae Involucratae (天山雪莲, Tianshan Xuelian)

Snow Lotus Herb

Snow Lotus Herb is the dried aerial part of *Saussurea involucrate* (Kar. et Kir.) Sch. Bip. (Fam. Compositae), habitually used by the Uygur nationality. The drug is collected at flowering in summer and autumn, and dried in the shade.

Description Stems cylindrical, 2-48 cm long, 0.5-3 cm in diameter, externally yellowish-green or yellowish-brown, sometimes purplish, with longitudinal ridges; fracture hollowed. Cauline leaves densely arranged, sessile, with remains after fallen off; When whole, lamina ovate-oblong or broadly lanceolate, pubescent on the two surfaces, with teeth and hairs on margin, midrib distinct. Capitulum acrogenous, without stalk, 10-42 densely gathered in spherical shape, bracts long-ovate or ovate, sessile, sunken in the centre like a ship, membranous and translucent; involucre 3-4 layers, lanceolate, in equal length, the outer layer mostly purplish-brown, the inner layer brownish-yellow or yellowish-white; florets tubular, purplish-red; stigma bilobate. Achenes cylindrical, with longitudinal ridges and 2 layers of feather-like pappi. Texture light and fragile. Odour, slightly aromatic; taste, slightly bitter.

Identification (1) Powder: yellowish-grey to yellowish-green. Glandular hairs pestle-like, head and stalk mostly 2-celled. Non-glandular hairs frequently polycellular or unicellular, basal cells subrectanglar, Apical cells relatively slender or twisted, 40-300 μm long. Pollens spherical, 45-68 μm in diameter, with thorny exine and 3 furrows. Stomata anomocytic. Pappi branched, in several rows. Fragments of stigma with thorny or villiform protuberances. (2) Ultrasonicate 0.5 g of the powder with 20 ml of methanol for 10 minutes, filter, evaporate the filtrate to dryness, dissolve the residue in 1 ml of methanol as the test solution. Prepare a solution with 0.5 g of Herba Saussureae Involucratae reference drug in the same manner as the reference drug solution. Dissolve rutin CRS and chlorogenic acid CRS in methanol to produce two solutions containing 5 mg and 2 mg per ml, respectively, as the reference solutions. Carry out the method for thin layer chromatography (Appendix Ⅵ B), using silica gel G as the coating substance and the upper layer of a mixture of ethyl acetate, butanone, formic acid and water (10 : 6 : 1 : 2) as the mobile phase. Apply separately to the plate 3-5 μl of each of the above four solutions. After developing and removal of the plate, dry in air. Spray with a 1% solution of sodium nitrite in 1% methanol, heat to the spots clear. The spots in the chromatogram obtained with the test solution correspond in position and colour to the spots in the chromatogram obtained with the reference drug solution and the reference solutions.

Water Not more than 12.0 per cent (Appendix Ⅸ H, method 1).

Total ash Not more than 12.0 per cent (Appendix Ⅸ K).

Acid-insoluble ash Not more than 3.0 per cent (Appendix Ⅸ K).

Extractives Carry out the method for determination of ethanol-soluble extractives (Appendix Ⅹ A, the hot extraction method), using 70% ethanol as the solvent, not less than 15.0 per cent.

Assay Carry out the method for high performance liquid chromatography (Appendix Ⅵ D).

Chromatographic system and system suitability Use octadecylsilane bonded silica gel as the stationary phase and a mixture of methanol and 0.4% phosphoric acid (38 : 62) as the mobile phase. As detector a spectrophotometer set at 340 nm, maintain the column temperature at 40℃. The number of theoretical plates of the column is not less than 8000, calculated with reference to the peak of rutin.

Reference solution Dissolve a quantity of rutin CRS (dried previously to constant weight at 120℃) and chlorogenic acid CRS, accurately weighed, in 1 ml of 50% methanol to produce a mixture containing 80 μg of rutin and 60 μg of chlorogenic acid per ml respectively.

Test solution Weigh accurately 1 g of the powder (through No. 3 sieve), to a stopper conical flask, add accurately 50 ml of 50% methanol, weigh. Ultrasonicate for 10 minutes, allow to cool, weigh again, compensate the loss of the weight with 50% methanol, mix well, filter, use the successive filtrate as the test solution.

Procedure Inject accurately 10 μl of each of the test solution and the reference solution, respectively, into the column, and calculate the content.

It contains not less than 0.15 per cent of anhydrous rutin ($C_{27}H_{30}O_{16}$) and 0.15 per cent of chlorogenic acid ($C_{16}H_{18}O_9$), calculated with reference to the dried drug.

Uygur medicine:

Action To invigorate the kidney and promote blood flow, strong bones and muscles, nourish nerves, and regulate body fluids.

Indications Rheumatic arthritis, joint pain, cough due to pulmonary cold, nephros and hypogastrium psychroalgia, leukorrhagia.

Chinese medicine:

Action To warm the kidney to invigorate *yang*, expel *wind* and eliminate *dampness*, and promote blood flow to dredge meridians.

Indications Arthralgia due to *wind*, *cold* and *dampness*, rheumatoid arthritis, psychroalgia in the lower abdomen and irregular menstruation.

Usage and dosage 3-6 g, prepared into an oral decoction or infusion with wine; appropriate quantity for external use.

Precaution Contraindicated in pregnancy.

Storage Preserve in a cool and dry place.

Herba Schizonepetae (荆芥, Jingjie)

Fineleaf Schizonepeta Herb

Fineleaf Schizonepeta Herb is the dried aerial part of *Schizonepeta tenuifolia* Briq. (Fam. Labiatae). The drug is collected in summer and autumn when the tops of the flowering stems are in bloom and spikes keep green in colour, removed from foreign matter, and dried in the sun.

Description Stems square, branched at the upper part, 50-

80 cm long, 2-4 mm in diameter; externally yellowish-green or pale purplish-red, pubescent; texture light and fragile, fracture almost white. Leaves opposite, mostly fallen off, lamina 3-5 pinnatipartite, the lobes slender. Spike verticillasters terminal, 2-9 cm long, about 7 mm in diameter. Corolla mostly fallen off, persistent calyx campanulate, 5-toothed at the apex, pale brown or yellowish-green, pubescent; nutlets brownish-black. Odour, aromatic; taste, slightly astringent, pungent and cool.

Identification (1) Powder: Yellowish-brown. Epidermal cells of persistent calyx with deeply sinuous anticlinal walls. Glandular scales with a 8-celled head, 96-112 μm in diameter, and an unicellular stalk, brownish-yellow. Small glandular hairs with a 1-2 celled head and an unicellular stalk. Non-glandular hairs 1-6 celled, mostly with warty walls. Cells of exocarp polygonal in surface view, with mucilaginous walls, and containing brown contents. Stone cells of endocarp pale brown, with deeply sinuous anticlinal walls, and densely pitted. Fibres 14-43 μm in diameter, with straight or slightly sinuous walls.
(2) To 0.8 g of the coarse powder, add 20 ml of petroleum ether (60-90℃), stopper tightly, shake frequently, and allow to stand overnight. Filter and evaporate the filtrate to 1 ml as the test solution. Prepare a solution with 0.8 g of Herba Schizonepetae reference drug in the same manner as the reference drug solution. Carry out the method for thin layer chromatography (Appendix Ⅵ B), using silica gel H as the coating substance and a mixture of *n*-hexane and ethyl acetate (17 : 3) as the mobile phase. Apply separately to the plate 10 μl of each of the above two solutions. After developing and removal of the plate, dry in air. Spray with a 5% vanillin solution in 5% solution of sulfuric acid in ethanol, and heat at 105℃ to the spots clear. The spots in the chromatogram obtained with the test solution correspond in position and colour to the spots in the chromatogram obtained with the reference drug solution.

Assay ***Volatile oil*** Carry out the method for determination of volatile oil (Appendix Ⅹ D).
It contains not less than 0.60 per cent (ml/g) of volatile oil.

Pulegone Carry out the method for high performance liquid chromatography (Appendix Ⅵ D).

Chromatographic system and system suitability Use octadecylsilane bonded silica gel as the stationary phase and a mixture of methanol and water (80 : 20) as the mobile phase. As detector a spectrophotometer set at 252 nm. The number of theoretical plates of the column is not less than 3000, calculated with reference to the peak of pulegone.

Reference solution Dissolve a quantity of pulegone CRS, accurately weighed, in methanol to produce a solution containing 10 μg per ml.

Test solution Weigh accurately 0.5 g of the powder (through No. 2 sieve), to a stopper conical flask, ultrasonicate with 10 ml of methanol (power, 250 W; frequency, 50 kHz) for 20 minutes, filter. Ultrasonicate the residue and the filter paper with additional 10 ml of methanol in the same manner, filter and wash twice with a quantity of methanol. Combine the filtrate and washings to a 25 ml volumetric flask, dilute with methanol to volume, mix well, filter, use the successive filtrate as the test solution.

Procedure Inject accurately 10 μl of each of the reference solution and the test solution, respectively, into the column, and calculate the content.
It contains not less than 0.020 per cent of pulegone ($C_{10}H_{16}O$), calculated with reference to the dried drug.

Processing Eliminate foreign matter, spray with water, wash clean, soften thoroughly, bake at 50℃ for 1 hour, cut into sections, and dry in the sun.
Small sections about 5 mm long, in various shapes. Stems square, externally pale yellowish-green or pale purplish-red, pubescent; texture light and fragile, fracture almost white. Leaves opposite, lamina fragments irregular. Spike verticillasters mostly broken, corolla mostly fallen off. Nutlets brownish-black. Odour, aromatic; taste, slightly astrigent, pungent and cool.
Carry out the test (2) under Identification, showing same result. Carry out Assay as the above, it contains not less than 0.30 per cent (ml/g) of volatile oil and not less than 0.020 per cent of pulegone ($C_{10}H_{16}O$).

Action To induce diaphoresis, to dispel *wind*, and to promote eruptions.

Indications Common cold, headache, measles rubella, sores at the early stage.
Carbonized Herba Schizonepetae: Hematochezia, abnormal uterine bleeding, fainting after delivery due to excessive bleeding.

Usage and dosage 4.5-9 g.

Storage Preserve in a cool and dry place.

Herba Schizonepetae Carbonisatum (荆芥炭, Jingjietan)

Carbonized Fineleaf Schizonepeta Herb

Carbonized Fineleaf Schizonepeta Herb is the product of processed Fineleaf Schizonepeta Herb.

Preparation Stir-bake the sections of Herba Schizonepetae as described under the method for carbonizing by stir-baking (Appendix Ⅱ D) until its surface becomes charred-black and inside becomes charred-yellow, take out, dry in the air.

Description The sections irregular in shape, about 5 mm long, surface dark-brown. Stems square; texture light and fragile, fracture charred-brown. Leaves opposite, mostly fallen off. Corolla mostly fallen off, persistent calyx campanulate, 5-toothed at the apex. Odour, slightly aromatic; taste, bitter and pungent.

Identification Cells of exocarp polygonal in surface view, with mucilaginous walls, and containing brown contents. Stone cells of endocarp pale brown, with deeply sinuous anticlinal walls, and densely pitted. Fibre bundles with straight or slight sinuous walls.

Water Not more than 12.0 per cent (Appendix Ⅸ H, method 2).

Total ash Not more than 11.0 per cent (Appendix Ⅸ K).

Acid-insoluble ash Not more than 3.0 per cent (Appendix Ⅸ K).

Extractives Carry out the hot extraction method for determination of ethanol-soluble extractives (Appendix Ⅹ A), using 70% ethanol as the solvent, not less than 8.0 per cent.

Indications Hemafecia, metrorrhagia or metrostaxis, and postpartum anemic fainting.

Action To astringe and arrest bleeding.

Usage and dosage 5-10 g.

Storage Preserve in a cool and dry place.

Herba Scutellariae Barbatae (半枝莲, Banzhilian)

Barbated Skullcup Herb

Barbated Skullcup Herb is the dried herb of *Scutellaria barbata* D. Don (Fam. Labiatae). The drug is collected in summer and autumn when foliage branch growing luxuriantly, washed clean, and dried in the sun.

Description 15-35 cm long, glabrous or sparsely pubescent on the floral axis. Roots slender. Stems fascicled, relatively thin, square; externally dark purple or brownish-green. Leaves opposite, short petioled; lamina mostly crumpled, when whole, triangular-ovate or lanceolate, 1.5-3 cm long, 0.5-1 cm wide; obtuse at the apex, broadly cuneate at the base, entire or indistinctly crenate; the upper surface dark green, the lower surface greyish-green. Flowers, solitary in leaf axis of the upper part of the branches, lobes of calyx obtuse or slightly rounded; corolla bilabiate, brownish-yellow or pale bluish-purple, about 1.2 cm long, pubescent. Fruits oblate, pale brown. Odour, slight; taste, slightly bitter.

Assay ***Total flavones*** *Reference solution* Weigh accurately 10 mg of scutellarin CRS, dried previously to constant weight at 105℃, to a 50 ml volumetric flask, add methanol to volume and mix well (containing 0.2 mg of scutellarin per ml).

Standard calibration Measure accurately 0.4, 0.8, 1.2, 1.6 and 2.0 ml of the reference solution respectively into 10 ml volumetric flasks, add methanol to volume and mix well. Carry out the method for ultraviolet spectrophotometry and colourimetry (Appendix Ⅴ A), measure the absorbance at 335 nm, taking methanol as a blank, plot the standard curve, using absorbance as ordinate and concentration as abscissa.

Procedure Measure accurately 1 ml of methanol solution obtained under the Assay of Scutellarin, extracted in Soxhelt's extractor and diluted to 100 ml, into a 50 ml volumetric flask, dilute with methanol to volume. Carry out the method described under standard calibration beginning at the words "taking methanol as a blank", measure the absorbance, read out the weight of scutellarin (mg) in the test solution from the standard curve, and calculate.

It contains not less than 1.50 per cent of total flavones, calculated as scutellarin ($C_{21}H_{18}O_{12}$), with reference to the dried drug.

Scutellarin Carry out the method for high performance liquid chromatography (Appendix Ⅵ D).

Chromatographic system and system suitability Use octadecylsilane bonded silica gel as the stationary phase and a mixture of methanol, water and acetic acid (35∶61∶4) as the mobile phase. As detector a spectrophotometer set at 335 nm. The number of theoretical plates of the column is not less than 1500, calculated with reference to the peak of scutellarin.

Reference solution Weigh accurately 8 mg of scutellarin CRS into a 100 ml volumetric flask, dilute with the mobile phase to volume, mix well (containing 80 μg of scutellarin per ml).

Test solution Weigh accurately about 1 g of the powder (through No. 3 sieve) to a Soxhelt's extractor, add petroleum ether (60-90℃) and heat under reflux until the extract becomes colourless. Discard the petroleum ether solution, expel petroleum ether of the residue, add methanol and continue heating under reflux until the methanol extract becomes colourless. Transfer the methanol extract to a 100 ml volumetric flask and add methanol to volume. Measure accurately 25 ml of the above solution, evaporate to dryness, dissolve the residue in 20% methanol, transfer to a 25 ml volumetric flask, dilute to volume, mix well, filter, use the successive filtrate as the test solution.

Procedure Inject accurately 10 μl of each of the reference solution and the test solution, respectively, into the column, and calculate the content.

It contains not less than 0.20 per cent of scutellarin ($C_{21}H_{18}O_{12}$), calculated with reference to the dried drug.

Processing Eliminate foreign matter, wash clean, and cut into sections.

Action To remove toxic *heat*, and induce urination.

Indications Boils, sores, swelling and pain of the throat, venomous snakebite, traumatic injuries; edema; jaundice.

Usage and dosage 15-30 g; or 30-60 g of the fresh herb; appropriate quantity is pounded into paste and applied topically.

Storage Preserve in a dry place.

Herba Sedi (垂盆草, Chuipencao)

Stringy Stonecrop Herb

Stringy Stonecrop Herb is the fresh or dried herb of *Sedum sarmentosum* Bunge (Fam. Crassulaceae). The drug is collected in summer and autumn, removed from foreign matter, used freshly, or dried.

Description Stems slender, over 20 cm long, some nodes bearing slender adventitious roots. Leaves whorled in 3, oblanceolate to oblong, green, fleshy, 1.5-2.8 cm long, 3-7 mm wide, nearly acute at the apex, sharply narrow at the base, calcarate. Odour, slight; taste, slightly bitter.

Identification Transverse section of stem: Epidermal cells rectangular, outer walls thickened, cortex of about 10 layers of parenchymatous cells. Vascular cylinder small, vascular bundles collateral, vessels subrounded. Pith triangular, cells polygonal, walls strongly thickened and non-lignified. Cells near phloem and pith cells containing reddish-brown secretion.

Water (dried herb) Not more than 13.0 per cent (Appendix Ⅸ H, method 2).

Acid-insoluble ash (dried herb) Not more than 5.0 per cent (Appendix Ⅸ K).

Extractives Carry out the method for determination of water-soluble extractives (Appendix Ⅹ A, the hot extraction method), not less than 20.0 per cent.

Processing Eliminate foreign matter, cut into sections for the dried herb.

Action To remove *damp-heat*, and to counteract toxicity.

Indications Jaundice with oliguria caused by *damp-heat*, acute and chronic hepatitis; carbuncles and sores.

Usage and dosage 250 g of the fresh herb or 15-30 g of the dried herb.

Storage The fresh herb to be collected at using. Preserve the dried herb in a dry place.

Herba Selaginellae (卷柏, Juanbai)

Spikemoss

Spikemoss is the dried herb of *Selaginella tamariscina* (Beauv.) Spring or *Selaginella pulvinata* (Hook. et Grev.) Maxim. (Fam. Selaginellaceae). The drug is collected all the year round, removed from fibrous roots and soil, and dried in the sun.

Description *Herb of Selaginella tamariscina* Crumpled into fisted masses, 3-10 cm long, Branches fascicled, flat and branched, green or brownish-yellow, curved inward, densely growing scaly leaflets, long-aristate at the apex, central leaves (ventral leaves) 2 lines, ovate-oblong, arranged obliquely upward, margin membranous, irregularly serrulate. Dorsal leaves (lateral leaves), membranous margin of dorsal surface frequently brownish-black. Fibrous roots remained at the base, brown to dark brown, scattered or clustered in short rods. Texture fragile, easily broken. Odour, slight; taste, weak.

Herb of Selaginella pulvinata Most of fibrous roots scattered. Central leaves (ventral leaves) 2 lines, ovate-lanceolate, arranged straightly upward. Leaves unsymmetrical, the inner side relatively straight, the outer side frequently thickened by folding inward, margin entire.

Identification To 2 g of the powder add 50 ml of methanol, heat under reflux for 1 hour, filter, evaporate the filtrate to dryness, and dissolve the residue in 3 ml of dehydrated ethanol as the test solution. Prepare a solution with 2 g of Herba Selaginellae reference drug in the same manner as the reference drug solution. Carry out the method for thin layer chromatography (Appendix Ⅵ B), using silica gel G mixed with sodium carboxymethylcellulose as the coating substance and a mixture of isopropanol, concentrated ammonia TS and water (13 : 1 : 1) as the mobile phase. Apply separately to the plate 3 μl of each of the above two solutions. After developing and removal of the plate, dry in air. Spray with 2% aluminium trichloride in methanol, examine under ultraviolet light at 365 nm. The fluorescent spots in the chromatogram obtained with the test solution correspond in position and colour to the spots in the chromatogram obtained with the reference drug solution.

Processing *Herba Selaginellae* Eliminate remained fibrous roots and foreign matter, wash clean, cut into sections, and dry in the sun.

Herba Selaginellae (carbonized) Stir-bake the clean Herba Selaginellae as described under the method for carbonizing by stir-baking (Appendix Ⅱ D) until a charred-black colour is produced externally.

Action To promote blood circulation and stimulate menstruation.

Herba Selaginellae (carbonized) To remove blood stasis and arrest bleeding.

Indications Amenorrhea, dysmenorrhea, masses in the abdomen.

Herba Selaginellae (carbonized) Spitting of blood, abnormal uterine bleeding, hematochezia, prolapse of rectum.

Usage and dosage 4.5-9 g.

Precaution Be cautious about pregnant women.

Storage Preserve in a dry place.

Herba Siegesbeckiae (豨莶草, Xixiancao)

Siegesbeckia Herb

Siegesbeckia Herb is the dried aerial part of *Siegesbeckia orientalis* L., *Siegesbeckia pubescens* Makino or *Siegesbeckia glabrescens* Makino. (Fam. Compositae). The drug is collected in summer and autumn before or at flowering, removed from foreign matter, and dried in the sun.

Description Stems subsquare, frequently branched, 30-110 cm long, 0.3-1 cm in diameter; externally greyish-green, yellowish-brown or purplish-brown, with longitudinal furrows and fine striations, covered with grey pubescences; nodes distinct, slightly swollen; texture fragile, easily broken, fracture yellowish-white or greenish; pith broad, almost white, hollowed. Leaves opposite, lamina frequently crumpled and rolled, when whole, ovate, greyish-green, margin obtusely serrate; both surfaces with white pubescences, trinervious. Some bearing yellow capitulum; involucre spatulate. Odour, slight; taste, slightly bitter.

Identification Ultrasonicate 1 g of the powder with 10 ml of methanol for 15 minutes, filter, use the filtrate as the test solution. Dissolve kirenol CRS in methanol to produce a solution containing 0.1 mg per ml as the reference solution. Carry out the method for thin layer chromatography (Appendix Ⅵ B), using silica gel G as the coating substance and a mixture of chloroform and methanol (4 : 1) as the mobile phase. Apply separately to the plate 5 μl of each of the above two solutions. After developing and removal of the plate, dry in air. Spray with 5% vanillin in sulfuric acid, heat to the spots clear. The spot in the chromatogram obtained with the test solution corresponds in position and colour to the spot in the chromatogram obtained with the reference solution.

Assay Carry out the method for high performance liquid chromatography (Appendix Ⅵ D).

Chromatographic system and system suitability Use octadecylsilane bonded silica gel as the stationary phase and a mixture of acetonitrile and water (25 : 75) as the mobile phase. As detector a spectrophotometer set at 215 nm, The number of theoretical plates of the column is not less than 3000, calculated with reference to the peak of kirenol.

Reference solution Dissolve a quantity of kirenol CRS, accurately weighed, in methanol to produce a solution containing 0.5 mg per ml.

Test solution Weigh accurately 1 g of the powder (through No. 3 sieve), to a Soxhlet's extractor, heat under reflux with 150 ml of petroleum ether (60-90℃) for 3 hours. Take out the filter canister, expel the solvent, and place in a conical flask. Add accurately 50 ml of methanol, weigh, heat under reflux for 2 hours, allow to cool, weigh again, and compensate the loss of the weight with methanol, mix well, filter, use the successive filtrate as the test solution.

Procedure Inject accurately 20 μl of the test solution and the reference solution, respectively, into the column, and calculate the content.

It contains not less than 0.050 per cent of kirenol ($C_{20}H_{34}O_4$),

calculated with reference to the dried drug.

Processing *Herba Siegesbeckiae* Eliminate foreign matter, wash clean, soften slightly, cut into sections, and dry.

Herba Siegesbeckiae (*processed with wine*) Steam the sections of *Herba Siegesbeckiae* thoroughly as described under the method for steaming with wine (Appendix Ⅱ D), using 20 kg of yellow rice wine per 100 kg of *Herba Siegesbeckiae*.

Action To relieve rheumatic conditions, improve the motility of joints, and counteract *toxicity*.

Indications Rheumatic arthralgia with aching and weakness of the lower back and knees, numbness of limbs; hemiplegia; rubella, sores with exudation.

Usage and dosage 9-12 g.

Storage Preserve in a ventilated and dry place.

Preparation Siegesbeckia Pills

Herba Spirodelae (浮萍, Fuping)

Common Ducksmeat Herb

Common Ducksmeat Herb is the dried herb of *Spirodela polyrrhiza* (L.) Schleid. (Fam. Lemnaceae). The drug is collected from June to September, washed clean, removed from foreign matter, and dried in the sun.

Description Flat thallophyte, ovoid or ovate, 2-5 mm in diameter on the long side. The upper surface pale green to greyish-green, with an eccentric small pit, margin entire or slightly curved. The lower surface purplish-green to purplish-brown, with several fibrous roots. Texture light, easily broken when twisted. Odour, slight; taste, weak.

Action To dispel *wind-heat*, promote eruptions, and induce urination.

Indications Measles without adequate eruptions, urticaria within itching; edema with oliguria.

Usage and dosage 3-9 g; appropriate quantity is decocted for wash or immersion.

Storage Preserve in a ventilated and dry place, protected from moisture.

Herba Swertiae Mileensis (青叶胆, Qingyedan)

Mile Swertia Herb

Mile Swertia Herb is the dried herb of *Swertia mileensis* T. N. Ho et W. L. Shih (Fam. Gentianaceae). The drug is collected at flowering and fruiting in autumn, removed from soil, and dried in the sun.

Description 15-45 cm long. Roots long conical, 2-7 cm long, about 0.2 cm in diameter, some branched. Externally yellow or yellowish-brown. Stems quadrangular, bearing extremely narrow wings on the ridges, 1-2 mm in diameter; externally yellowish-green or yellowish-brown, frequently reddish-purple at the lower part, fracture hollowed. Leaves opposite, sessile; mostly crumpled or broken, when whole, stripe-shaped or narrow-lanceolate, 1-4 cm long, 2-7 mm wide. Cymes conical, calyx 4, stripe-shaped, yellowish-green; corolla 4-partite, yellow, segments ovate-lanceolate, bearing 2 glandular pits inside the base; stamens 4; capsules narrowly ovoid, seed numerous, small, brown. Odour, slight; taste, bitter.

Identification (1) Powder: Green or yellowish-green. Stone cells subrounded, subrectangular, elongated stripe-shaped or fusiform, sometimes prominent or elongated at one end, 100-120 μm long, 40-50 μm in diameter, lignified, walls 5-10 μm thick, pit canals distinct. Fibres long-fusiform, 180-220 μm long, 8-10 μm in diameter, lignified, walls about 2.5 μm thick, with distinct pit canals. Walls of the upper epidermal cells of the leaf sinuous; cuticle striations of the lower epidermal cells indistinct, stomata numerous, anisocytic or anomocytic. Crystals of calcium oxalate frequently occurring in rods, needles or plates in the mesophyll cells. Pollen grains rounded, 30-37 μm in diameter, with 3 germinal furrows and finely reticulated striations.

(2) To 5 g of the powder add 45 ml of methanol, heat under reflux for 30 minutes and filter. Apply 1 drop of the filtrate to filter paper, dry, add 1 drop of aluminium trichloride TS and allow to dry, examine under ultraviolet light at 365 nm, a greenish-yellow fluorescence is produced.

(3) To 2 ml of the filtrate obtained under Identification test (2) add 2-3 drops of 7% solution of hydroxylamine hydrochloride in methanol and 2-3 drops of 10% solution of potassium hydroxide in methanol, heat slightly on a water bath; allow to cool, adjust the pH value to 3-4 with dilute hydrochloric acid and filter. Add 1-2 drops of ferric chloride TS to the filtrate, a purple colour is produced.

(4) Concentrate the remaining filtrate obtained under Identification test (2) to about 10 ml as the test solution. Dissolve oleanolic acid CRS in methanol to produce a solution containing 2 mg per ml as the reference solution. Carry out the method for thin layer chromatography (Appendix Ⅵ B), using silica gel G as the coating substance and a mixture of toluene, ethyl acetate and glacial acetic acid (12 : 4 : 0.5) as the mobile phase. Apply separately to the plate 2 μl of each of the above two solutions. After developing and removal of the plate, dry in air. Spray with a 10% solution of sulfuric acid in ethanol and heat at 105℃ to the spots clear. A purplish-red spot in the chromatogram obtained with the test solution corresponds in position and colour to the spot in the chromatogram obtained with the reference solution.

(5) Apply 1 ml of the test solution obtained under Identification test (4) to a neutral aluminium oxide column (100-200 mesh, 1 g, about 5 mm in inner diameter), elute with about 2 ml of methanol. Evaporate the eluate to dryness, dissolve the residue in 2 ml of methanol as the test solution. Dissolve swertiamarin CRS in methanol to produce a solution containing 8 mg per ml as the reference solution. Carry out the method for thin layer chromatography (Appendix Ⅵ B), using silica gel GF_{254} as the coating substance and a mixture of chloroform and methanol (17 : 3) as the mobile phase. Apply separately to the plate 1-2 μl of each of the above two solutions. After developing and removal of the plate, dry in air and examine under ultraviolet light at 254 nm. The spot in the chromatogram obtained with the test solution corresponds in position and colour to the spot in the chromatogram obtained with the reference solution.

Processing Eliminate foreign matter, spray with water, soften briefly, cut into sections, and dry in the air.

Action To increase the flow of bile, and remove *heat-dampness*.

Indications Jaundice with dark urine; acute urinary infetion with difficult painful urination.

Usage and dosage 10-15 g.

Precaution Be cautious about patients with *deficiency-cold*.

Storage Preserve in a ventilated and dry place.

Preparation Mile Swertia Tablets

Herba Taraxaci
(蒲公英, Pugongying)

Dandelion

Dandelion is the dried herb of *Taraxacum mongolicum* Hand. -Mazz., *Taraxacum sinicum* Kitag. or several other species of the same genus (Fam. Compositae). The drug is collected from spring to autumn at the early stage of flowering, removed from foreign matter, washed clean and dried in the sun.

Description Crumpled and rolled masses. Roots conical, frequently curved, 3-7 cm long; externally brown, crumpled; the root stock with brown or yellowish-white hairs, some fallen off. Leaves basal, frequently crumpled and broken, when whole, oblanceolate, greenish-brown or dark grey; apex acute or obtuse; margin lobate or pinnatifid; base becoming narrow downwards to petiole-shape; midrib of lower surface distinct. Pedicels 1 or more, each with a capitulum on the top; involucre several layers, the inner layer relatively long; corolla yellowish-brown or pale yellowish-white. Some showing numerous long-elliptical achenes with white aigrets. Odour, slight; taste, slightly bitter.

Identification (1) Surface view of leaf: The epidermal cells on both surfaces with sinuous anticlinal walls, cuticle striations distinct or sparsely visible. Both surfaces bearing nonglandular hairs, 3-9 celled, 17-34 μm in diameter, apical cells extremely long, crumpled to whip-shape or fallen off. Stomata, more frequently occurring on the lower surface, anomocytic or anisocytic, with 3-6 subsidiary cells; mesophyll containing fine crystals of calcium oxalate. Laticiferous tubes occurring alongside the veins.
Transverse section of root: Cork consisting of several layers of brown cells. Phloem broad, groups of laticiferous tubes arranged in several interrupted rings. Cambium in ring. Xylem relatively small, with indistinct rays; vessels relatively large, scattered. Parenchymatous cells containing inulin.
(2) To 1 g of the powder add 20 ml of methanol, heat under reflux for 30 minutes, filter, evaporate the filtrate to dryness, dissolve the residue in 10 ml of water, filter, extract the filtrate with two 20-ml quantities of ethyl acetate, combine the ethyl acetate solutions and evaporate to dryness, dissolve the residue in 1 ml of methanol as the test solution. Dissolve caffeic acid CRS in methanol to produce a solution containing 0.5 mg per ml as the reference solution. Carry out the method for thin layer chromatography (Appendix Ⅵ B), using silica gel G as the coating substance and the upper layer of ethyl acetate, formic acid and water (7 : 2.5 : 2.5) as the mobile phase. Apply separately to the plate 6 μl of each of the above two solutions. After developing and removal of the plate, dry in air. Examine under ultraviolet light at 365 nm. A fluorescent spot in the chromatogram obtained with the test solution corresponds in position and colour to the spot in the chromatogram obtained with the reference solution.

Assay Carry out the method for high performance liquid chromatography (Appendix Ⅵ D).

Chromatographic system and system suitability Use octabecylsilane bonded silica gel as the stationary phase and a mixture of methanol and phosphate BS (dissolve 1.56 g of sodium dihydrogen phosphate in 1000 ml of water, adjust the pH value to 3.8-4.0 with 1% phosphoric acid solution) (23 : 77) as the mobile phase. As detector a spectrophotometer set at 323 nm, maintain the column temperature at 40 ℃. The number of theoretical plates of the column is not less than 3000, calculated with reference to the peak of caffeic acid.

Reference solution Place 7.5 mg of caffeic acid CRS, previously dried to constant weight at 110℃ and accurately weighed, in a 50 ml volumetric flask, dissolve in methanol and dilute to volume, mix well. Transfer accurately 2 ml of the above solution to a 10 ml volumetric flask, dilute with methanol to volume, mix well (30 μg per ml).

Test solution Weigh accurately 1 g of the powder in a 50 ml stopper conical flask, add accurately 10 ml of a solution of 5% formic acid in methanol, stopper well, shake thoroughly, weigh, ultrasonicate for 30 minutes (power 250 W, frequency 40 kHz), cool, weigh again and compensate the loss of the weight with a solution of 5% formic acid in methanol, shake thoroughly, centrifuge, filter the supernatant with a 0.45 μm filter membrane, store the filtrate in a brown volumetric flask as the test solution.

Procedure Inject accurately 10 μl of the reference solution and 5-20 μl of the test solution, respectively into the column, and caculate the content.
It contains not less than 0.02 per cent of caffeic acid ($C_9H_8O_4$), calculated with reference to the dried drug.

Processing Eliminate foreign matter, wash clean, cut into sections, and dry in the sun.

Action To remove toxic *heat*, reduce swelling and nodulation, and relieve dysuria.

Indications Boils and sores, mastitis lymphadenitis, inflammation of eyes, sore throat, lung abscess, appendicitis, jaundice caused by *damp-heat*, urinary infection with difficult painful urination.

Usage and dosage 9-15 g; appropriate quantity of the fresh herb is pounded into paste for to-pical application or made into hot decoction for fumigation and irrigation.

Storage Preserve in a ventilated and dry place, protected from moisture and moth.

Herba Taxilli
(桑寄生, Sangjisheng)

Chinese Taxillus Herb

Chinese Taxillus Herb is the dried branch, with leaf, of *Taxillus chinensis* (DC.) Danser (Fam. Loranthaceae). The drug is collected in winter and spring, removed from thick stem, cut into section, and dried or dried after steaming.

Description Branches cylindrical, 3-4 cm long, 0.2-1 cm in diameter. Externally reddish-brown or greyish-brown, with fine longitudinal wrinkles and numerous fine prominent brown lenticels, some young branches with dark brown pubescences; texture hard, fracture irregular, bark reddish-brown, wood pale in colour. Leaves frequently rolled, short petioled, when whole, ovate or elliptical, 3-8 cm long, 2-5 cm wide, externally yellowish-brown, young

leaves covered with fine pubescences, apex obtusely rounded, base rounded or broadly cuneate, margin entire; texture leathery. Odour, slight; taste, astringent.

Identification (1) Transverse section of stem: Epidermal cells sometimes remained. Cork cells 10 or more layers, some containing brown contents. Cortex narrow, groups of stone cells occurring in older stem, parenchymatous cells containing brown contents. Groups of stone cells and fibre bundles existing in pericycle, arranged in an interrupted ring. Phloem extremely narrow, rays with scattered stone cells. Fascicular cambium distinct. Xylem rays 1-4 cells wide, stone cells occurring near pith; vessels scattered singly or 2-3 aggregated in groups. Groups of stone cells occurring in pith and the parenchymatous cells containing brown contents. Some stone cells containing prisms of calcium oxalate or brown contents.
Powder: Pale yellowish-brown. Stone cells subsquare, subrounded, occasionally branched, in some cells, walls thickened on 3 sides and thin on one side, containing prisms of calcium oxalate. Fibres in bundles, about 17 μm in diameter. Bordered pitted, reticulated and spiral vessels frequently observed. Fragments of branched asteriate hairs rare.
(2) To 5 g of the powder add 60 ml of a mixture of methanol and water (1 : 1), heat under reflux for 1 hour, filter while hot, evaporate the filtrate to about 20 ml, dilute with 10 ml of water, add about 0.5 ml of dilute sulfuric acid, boil under reflux for 1 hour, extract with two 30-ml quantities of ethyl acetate by shaking, evaporate the combined ethyl acetate solution to about 1 ml as the test solution. Dissolve quercitin CRS in ethyl acetate to produce a solution containing 0.5 mg per ml as the reference solution. Carry out the method for thin layer chromatography (Appendix Ⅵ B), using silica gel G mixed with 0.5% sodium hydroxide solution as the coating substance and a mixture of toluene (saturated with water), ethyl formate and formic acid (5 : 4 : 1) as the mobile phase. Apply separately to the plate 10 μl of each of the above two solutions. After developing and removal of the plate, dry in air. Spray with a 5% solution of aluminium trichloride in ethanol, examine under ultraviolet light at 365 nm. A fluorescent spot in the chromatogram obtained with the test solution corresponds in position and colour to the spot in the chromatogram obtained with the reference solution.

Cardiac glycoside To 10 g of the coarse powder add 50 ml of 80% ethanol, heat under reflux for 30 minutes, filter, evaporate the filtrate to dryness on a water bath, dissolve the residue in 10 ml of hot water, filter, extract the filtrate with four 15-ml quantities of ether by shaking, discard the ether layer. To the water solution, add saturated lead acetate solution until the precipitate is completed, filter, to the filtrate add 10 ml of ethanol, then add saturated sodium sulfate solution to remove the lead ion, filter, extract the filtrate with three 15-ml quantities of chloroform by shaking, evaporate the combined chloroform solution to 1 ml. Drop the concentrated solution on a filter paper, dry, drop alkaline 3,5-dinitrobenzoic acid solution (mix 1 ml of dinitrobenzoic acid TS and 1 ml of sodium hydroxide TS) on the paper, no purplish-red colour appears.

Processing Eliminate foreign matter, wash briefly, soften thoroughly, cut into thick slices, and dry.

Action To reinforce the liver and the kidney, strengthen the tendons and bones, relieve rheumatic conditions, and to prevent abortion.

Indications Rheumatic or rheumatoid arthralgia with aching and weakness of the lower back and knees; abnormal uterine bleeding, menorrhagia; uterine bleeding during pregnancy, threatened abortion; hypertension.

Usage and dosage 9-15 g.

Storage Preserve in a dry place, protected from moth.

Herba Verbenae (马鞭草, Mabiancao)

European Verbena Herb

European Verbena Herb is the dried aerial part of *Verbena officinalis* L. (Fam. Verbenaceae). The drug is collected at flowering, from June to August, removed from foreign matter, and dried in the sun.

Description Stems square, frequently branched, with longitudinal furrows on the four sides, 0.5-1 m long; externally greenish-brown, rough; texture hard and fragile, fracture medullated or hollowed. Leaves opposite, crumpled and mostly broken, greenish-brown, when whole, lamina 3-partite, margin serrate. Spikes slender; with numerous small flowers. Odour, slight; taste, bitter.

Identification (1) Powder: Greenish-brown. Epidermal cells of stems long polygonal or subrectangular, anticlinal walls mostly straight, stomata visible. The lower epidermal cells of leaves with sinuous anticlinal walls, stomata anomocytic or anisocytic, subsidiary cells 3-5. Glandular scales with a 4-celled head, 23-58 μm in diameter, and an unicellular stalk. Non-glandular hairs unicellular. Pollen grains subrounded or subrounded-triangular, 24-35 μm in diameter, exine smooth, with 3 germinal apertures.
(2) To 2 g of the powder add 60 ml of 80% methanol, heat under reflux for 1 hour, filter, and evaporate the filtrate to dryness. Dissolve the residue in 2 ml of methanol as the test solution. Prepare a solution with 2 g of Herba Verbenae reference drug in the same manner as the reference drug solution. Dissolve ursolic acid CRS in methanol to produce a solution containing 1 mg per ml as the reference solution. Carry out the method for thin layer chromatography (Appendix Ⅵ B), using silica gel G mixed with sodium carboxymethylcellulose as the coating substance and a mixture of chloroform, methanol and isopropanol (16 : 0.5 : 0.25) as the mobile phase. Apply separately to the plate 2-4 μl of each of the above three solutions. After developing and removal of the plate, dry in air. Spray with a mixture of vanillin ethanol solution (1→100) and a water solution of perchloric acid (3→100) (mix in equal portions before use), heat at 105℃ to the spots clear. The spots in the chromatogram obtained with the test solution correspond in position and colour to the spots in the chromatograms obtained with the reference solution and the reference drug solution.

Assay Weigh accurately about 1 g of the coarse powder into a stopper conical flask, add accurately 30 ml of dehydrated ethanol, weigh, ultrasonicate for 1.5 hours, allow to cool, weigh again and compensate the loss of the weight with dehydrated ethanol, shake thoroughly, filter. Measure accurately 15 ml of the successive filtrate, evaporate to dryness, macerate the residue with two 15-ml quantities of petroleum ether (30-60℃) for about 2 minutes each time, discard the petroleum ether solutions. Dissolve the residue in a quantity of dehydrated ethanol by gentle heating and transfer to a 5 ml volumetric flask, dilute with dehydrated ethanol to volume, mix well as the test solution. Dissolve a quantity of ursolic acid CRS, accurately weighed, in dehydrated ethanol to produce a solution containing 0.5 mg per ml as the reference solution. Carry out the method for thin layer chromatography (Appendix Ⅵ B) using silica gel G as the coating substance and a mixture of cyclohexane,

chloroform, ethyl acetate and glacial acetic acid (20 : 5 : 8 : 0.1) as the mobile phase. Apply separately to the plate 2 μl of the test solution, 1 μl and 2 μl of the reference solution. After developing and removal of the plate, dry in air, spray with a 10% solution of sulfuric acid in ethanol, heat at 110℃ to the spots clear. Cover the plate with a piece of glass in same size, and fix with tape. Carry out the method for thin layer chromatography (thin layer chromatographic scanning method) (Appendix Ⅵ B), scan at the wavelengths 525 nm (λ_S) and 700 nm (λ_R). Determine the integrated absorbance value of the test solution and that of the reference solution, and calculate the content.

It contains not less than 0.36 per cent of ursolic acid ($C_{30}H_{48}O_3$), calculated with reference to the dried drug.

Processing Eliminate the remains of roots and foreign matter, wash clean, soften briefly, cut into sections, and dry in the sun.

Action To promote the flow of blood and to relieve blood stasis, to malarial attacks, counteract *toxicity*, and to irduce urination.

Indications Masses in the abdomen; amenorrhea and dysmenorrhea; malaria; inflammation of the throat, carbuncles, boils, acute infection of the urinary tract; edema.

Usage and dosage 4.5-9 g.

Storage Preserve in a dry place.

Herba Violae
(紫花地丁, Zihuadiding)

Tokyo Violet Herb

Tokyo Violet Herb is the dried herb of *Viola yedoensis* Makino (Fam. Violaceae). The drug is collected in spring and autumn, removed from foreign matter, and dried in the sun.

Description Frequently crumpled into masses. The main roots long-conical, 1-3 mm in diameter, pale yellowish-brown, with fine longitudinal wrinkles. Leaves basal, greyish-green, when whole, lanceolate or ovate-lanceolate, 1.5-6 cm long, 1-2 cm wide; apex obtuse, base truncate or somewhat cordate, margin obtusely serrate, both surfaces pubescent; petioles slender, 2-6 cm long, the upper part with distinct narrow wings. Pedicels slender; petals 5, purple or pale brown; hypanthium slender tubular. Capsules elliptical or 3-splitted; seeds numerous, pale brown. Odour, slight; taste, slightly bitter and sticky.

Identification (1) Transverse section of leaf: The upper epidermal cells relatively large, tangentially elongated, the outer walls thickened and the inner walls mucilaginous, frequently swollen into semi-circle; the lower epidermal cells relatively small, occasionally occurring mucilage cells; the upper and lower epidermis bearing unicellular non-glandular hairs, 32-240 μm long, 24-32 μm in diameter, with short cuticle striations. Palisade cells 2-3 layers; spongy cells subcircular, containing cluster of calcium oxalate, 11-40 μm in diameter. Midrib vascular bundles collateral, the inner side of the upper and lower epidermis occurring 1-2 layers of collenchymatous cells.

(2) To 2 g of the powder add 20 ml of methanol, ultrasonicate for 20 minutes, filter, evaporate the filtrate to dryness, add 10 ml of warm water to the residue, stir to dissolve, filter, evaporate the filtrate to dryness, dissolve the residue in 1 ml of methanol as the test solution. Prepare a solution with 2 g of Herba Violae reference drug in the same manner as the reference drug solution. Carry out the method for thin layer chromatography (Appendix Ⅵ B), using silica gel G as the coating substance and a mixture of toluene, ethyl acetate and formic acid (5 : 3 : 1) as the mobile phase. Apply separately to the plate 5-10 μl of the test solution and 5 μl of the reference drug solution. After developing and removal of the plate, dry in air. Examine under ultraviolet light at 365 nm. Three main fluorescent spots in the chromatogram obtained with the test solution correspond in position and colour to the spots in the chromatogram obtained with the reference drug solution.

Processing Eliminate foreign matter, wash clean, cut into pieces and dry.

Action To remove toxic *heat*, cool blood and to reduce swelling.

Indications Carbuncles, boils, erysipelas and other cutaneous and subcutaneous pyogenic infections; venomous snake-bite.

Usage and dosage 15-30 g; appropriate quantity of the fresh herb is pounded into paste and applied topically.

Storage Preserve in a dry place.

Herba Visci
(槲寄生, Hujisheng)

Coloured Mistletoe Herb

Coloured Mistletoe Herb is the dried stem and branch with leaf of *Viscum colouratum* (Komar.) Nakai (Fam. Loranthaceae). The drug is collected from winter to spring, removed from thick stem, cut into section, and dried or dried after steaming.

Description Stems cylindrical, 2-5 branched in fork shape, about 30 cm long, 0.3-1 cm in diameter; externally yellowish-green, golden-yellow or yellowish-brown, with longitudinal wrinkles; nodes swollen, with branches or scars of branches. Texture light and fragile, easily broken; fracture uneven, bark yellow, wood pale yellow, rays radial, pith often inclined to one side. Leaves opposite on the tips of branches, easily fallen off, sessile; lamina long-elliptical-lanceolate, 2-7 cm long, 0.5-1.5 cm wide; apex obtusely rounded, base cuneate, margin entire; externally yellowish-green, with fine wrinkles, quinquenervis, the middle 3 distinct. Texture leathery. Berry spherical, crumpled. Odour, slight; taste, slightly bitter, sticky on chewing.

Identification (1) Transverse section of stem: Epidermal cells rectangular, the outer walls covered with yellowish-green cuticle, 19-80 μm thick. Cortex relatively broad, fibres of several tens in bundles, slightly lignified; stone cells of old stems numerous, scattered singly or in groups. Phloem relatively narrow, with stone cells scattered in old stems. Cambium indistinct. Xylem rays with scattered fibre bundles; vessels surrounded by numerous fibres and a few heterogeneous cells. Pith distinct. Parenchymatous cells containing clusters of calcium oxalate and a few prisms.

Powder of stem: Pale yellow. Fragments of epidermis yellowish-green, cells subsquare, stomata visible. Fibres in bundles, 10-34 μm in diameter, walls relatively thickened, somewhat sinuous and slightly lignified. Heterogeneous cells irregular, walls relatively thickened, slightly lignified, with big lumen. Clusters of calcium oxalate 17-45 μm in diameter; prisms a few, 8-30 μm in diameter. Stone cells subsquare, subpolygonal or irregular, 42-102 μm in diameter.

(2) To 1-2 g of the herb, cut into pieces, add 30 ml of

ethanol, heat under reflux for 30 minutes, cool, filter, evaporate the filtrate to dryness, dissolve the residue in 1 ml of dehydrated ethanol as the test solution. Prepare a solution with 1.5 g of Herba Visci reference drug in the same manner as the reference drug solution. Dissolve oleanolic acid CRS in dehydrated ethanol to produce a solution containing 1 mg per ml as the reference solution. Carry out the method for thin layer chromatography (Appendix VI B), using silica gel G mixed with sodium carboxymethylcellulose as the coating substance and a mixture of toluene, ethyl acetate and glacial acetic acid (8 : 2 : 0.1) as the mobile phase. Apply separately to the plate 4 μl of each of the test solution and the reference drug solution and 2 μl of the reference solution. After developing and removal of the plate, dry in air. Spray with a 10% solution of sulfuric acid in ethanol, heat at 80℃ to the spots clear. The spots in the chromatogram obtained with the test solution correspond in position and colour to the spots in the chromatograms obtained with the reference solution and the reference drug solution. Examine under ultraviolet light at 365 nm, show same fluroscent spots.

Foreign matter Not more than 2 per cent (Appendix IX A).

Water Not more than 12.0 per cent (Appendix IX H, method 1).

Total ash Not more than 9.0 per cent (Appendix IX K).

Acid-insoluble ash Not more than 2.5 per cent (Appendix IX K).

Extractives Carry out the method for determination of ethanol-soluble extractives (Appendix X A, the hot extraction method), using ethanol as the solvent, not less than 20.0 per cent.

Assay Weigh accurately 1 g of the coarse powder into a stopper conical flask, add accurately 30 ml of a solution of hydrochloric acid-ethanol (1→10), weigh, ultrasonicate for 1.5 hours, cool, weigh again and compensate the loss of the weight with hydrochloric acid-ethanol (1→10) solution, shake thoroughly, filter. Measure accurately 15 ml of the successive filtrate, concentrate to about 5 ml and add 10 ml of water. Transfer to a separator and extract with five quantites of chloroform (20, 20, 20, 15, 15 ml), evaporate the combined chloroform extracts to dryness. Dissolve the residue in 5 ml of chloroform and apply to a neutral aluminium oxide column (5 g, 100-200 mesh, 0.9 cm in internal diameter), pre-elute with 30 ml of a mixture of chloroform and methanol (80 : 1), discard the eluate. Elute with 50 ml of a mixture of chloroform and methanol (20 : 1), collect the eluate and evaporate to dryness, dissolve the residue in dehydrated ethanol and transfer to a 5 ml volumetric flask, dilute with dehydrated ethanol to volume, shake well as the test solution. Dissolve a quantity of oleanolic acid CRS, accurately weighed, in dehydrated ethanol to produce a solution containing 0.5 mg per ml as the reference solution. Carry out the method for thin layer chromatography (Appendix VI B), using silica gel G as the coating substance and a mixture of cyclohexane, chloroform, ethyl acetate and glacial acetic acid (20 : 5 : 8 : 0.1) as the mobile phase. Apply separately to the plate 5 μl of the test solution, 2 μl and 4 μl of the reference solution. After developing and removal of the plate, dry in air. Spray with a 10% solution of sulfuric acid in ethanol, heat at 110℃ to the spots clear. Cover the plate with a piece of glass in same size, and fix with tape. Carry out the method for thin layer chromatography (Appendix VI B thin layer chromatographic scanning method), scan at the wavelengths 520 nm (λ_S) and 700 nm (λ_R). Determine the integrated absorbance value of the test solution and that of the reference solution, and calculate the content.

It contains not less than 0.17 per cent of oleanolic acid ($C_{30}H_{48}O_3$), calculated with reference to the dried drug.

Processing Eliminate foreign matter, wash briefly, soften thoroughly, cut into thick slices, and dry.

Action To relieve rheumatic conditions, reinforce the liver and the kidney, to strengthen tendons and bones, and prevent abortion.

Indications Rheumatic arthralgia, aching and weakness of the lower back and knees; threatened abortion.

Usage and dosage 9-15 g.

Storage Preserve in a dry place, protected from moth.

Hippocampus
(海马, Haima)

Sea Horse

Sea Horse is the dried body of *Hippocampus kelloggi* Jordan et Snyder, *Hippocampus histrix* Kaup, *Hippocampus kuda* Bleeker, *Hippocampus trimaculatus* Leach or *Hippocampus japonicus* Kaup (Fam. Syngnathidae). The drug is collected in summer or autumn, washed and dried in the sun; or removed from the skin and the viscera, then dried in the sun.

Description *Body of Hippocampus kelloggi* Long flattened and curved; about 30 cm long. Externally yellowish-white, with corrugated segment stripes and short spines. Head somewhat in the shape of a horse head, with a crown-like protuberance and a long tubular snout. Mouth small, toothless; eyes deeply sunken. Trunk seven-ridged, tail four-ridged, tapered and coiled. Texture light and hard, bony. Odour, slightly stinking; taste, slightly salty.

Body of Hippocampus histrix 15-20 cm long. The spines at the head and the segments of the body thin and pointed.

Body of Hippocampus kuda 20-30 cm long, blackish-brown.

Body of Hippocampus trimaculatus A black spot occurring at basal part of the short spines of the first, fourth and seventh segments of the lateral dorsal part.

Body of Hippocampus japonicus Small, 7-10 cm long, blackish-brown. Both segment stripes and short spines fine.

Processing Eliminate dust and scraps. Break to pieces or pulverize before use.

Action To warm the *kidney* and promote virility, to reduce nodulation, and to induce subsidence of swelling.

Indications Impotence; enuresis; dyspnea in *deficiency* syndrome of the *kidney*; mass in the abdomen; traumatic injuries; external use for carbuncles and boils.

Usage and dosage 3-9 g; for external use, appropriate quantity to be ground into powder and applied topically.

Storage Preserve in a cool and dry place, protected from moth.

Hirudo
(水蛭, Shuizhi)

Leech

Leech is the dried body of *Whitmania pigra*

Whitman, *Hirudo nipponica* Whitman or *Whitmania acranulata* Whitman (Fam. Hirudinidae). The drug is collected in summer or autumn, scalded to death with boiling water, dried in the sun or at a low temperature.

Description *Body of Whitmania pigra* Flattened spindle-shaped, with a large number of segments, 4-10 cm long, 0.5-2 cm wide. Dorsal side blackish-brown, slightly convex, 5 longitudinal stripes formed by black speckles visible when immersed in water; ventral side even, brownish-yellow; lateral sides brownish-yellow. Anterior end somewhat pointed, posterior end blunt, with a sucker at the anterior and posterior ends respectively, the anterior sucker inconspicuous, the posterior sucker larger. Texture fragile, easily broken, fracture gelatinous. Odour, slightly stinking.

Body of Hirudo nipponica Flattened cylindric, body usually curved and turned round, 2-5 cm long, 0.2-0.3 cm wide.

Body of Whitmania acranulata Narrow and flattened, 5-12 cm long, 0.1-0.5 cm wide.

Identification To 1 g of the power add 5 ml of ethanol, ultrasonicate for 15 minutes, filter and use the filtrate as the test solution. Prepare a solution of 1 g of Hirudo reference drug in the same manner as the reference drug solution. Carry out the method for thin layer chromatography (Appendix Ⅵ B), using silica gel G as the coating substance and a mixture of *n*-hexane and acetyl acetate (4 : 1) as the mobile phase. Apply separately 5 μl of the above two solutions to the plate. After developing and removal of the plate, dry in air. Spray with 10% solution of sulfuric acid in ethanol and heat at 105℃ to spots clear. The purple spots in the chromatogram obtained with the test solution correspond in position and colour to the spots in the chromatogram obtained with the reference drug solutions. Examine under ultraviolet light at 365 nm. The orange fluorescent spots in the chromatogram obtained with the test solution correspond in position and colour to the spots in the chromatogram obtained with the reference drug solution.

Water Carry out the method for determination of water (Appendix Ⅸ H, method 1), not more than 18.0 per cent.

Total ash Not more than 10.0 per cent (Appendix Ⅸ K)

Acid-insoluble ash Not more than 2.0 per cent (Appendix Ⅸ K).

Extractives Carry out the method for determination of ethanol-soluble extractives (Appendix Ⅹ A, the hot extraction method), using dilute ethanol as solvent, not less than 15.0 per cent.

Assay Weigh accurately 1 g of the powder (through No. 3 sieve), add 5 ml of 0.9% sodium chloride, mix well, macerate for 30 minutes with shaking frequently, centrifuge. Measure accurately 100 μl of the supernatant to a test tube (10 mm × 100 mm), add 200 μl of a buffer, containing 0.5% ox fibrinogen, of trihydroxylmethylaminomethane and hydrochloric acid (mix 25 ml of trihydroxylmethylamino methane (0.2 mol/L) and 40 ml of hydrochloric acid (0.1 mol/L), add water to 100 ml, adjust to pH 7.4), and mix well. Dropwise and slowly add (5 μl per minute, shaking gently when dripping) the solution of thrombin containing 40 unit per ml on a water bath at 37 ± 0.5 ℃ to coagulated. Wrtie down the volume of the consumed thrombin, and calculated as the followed formula: $U = C_1 V_1 / C_2 V_2$

U: active unit of thrombin per g (U/g);
C_1: concentration of thrombin solution (μ/ml);
C_2: concentration of test solution (g/ml);
V_1: consumed volume of thrombin (μl);
V_2: adding volume of test solution (μl);

The volume neutralized one unit of thrombin is one active unit of antithrombin.

It contains not less than 16.0 U of antithrombin per g.

Processing *Hirudo* Wash clean, cut into sections, and dry.

Hirudo (scalded) Scald sections of the clean Hirudo with talc powder as described under the method for scalding (Appendix Ⅱ D) until it becomes slightly expanded.

Action To eliminate blood stasis and to stimulate menstruation discharge.

Indications Masses in the abdomen, amenorrhea due to stagnation of blood; traumatic injuries.

Usage and dosage 1.5-3 g.

Precaution Contraindicated in pregnancy.

Storage Preserve in a dry place, protected from moth.

Hydrargyri Oxydum Rubrum (红粉, Hongfen)

Red Mercuric Oxide

The drug is red mercuric oxide (HgO).

Description Orange-red slices or powdery crystals. One side of the slices smooth and somewhat lustrous, another side relatively coarse, powder orange. Texture hard and fragile. Odour, slight; Gradually darkened on exposing to light.

Identification To 0.5 g of the drug add 10 ml of water, stir well, add dropwise a quantity of hydrochloric acid to dissolve, the solution yields the reactions characteristic of mercury salts (Appendix Ⅳ).

Mercurous Dissolve 0.5 g of the drug in 25 ml of dilute hydrochloric acid, the solution shows slight turbidity.

Chloride Dissolve 0.5 g of the drug in a quantity of water and 3 ml of nitric acid, add water to about 40 ml, carry out the limit test for chlorides (Appendix Ⅸ C). Any turbidity is not more intense than a reference solution prepared with 3 ml of standard solution of sodium chloride (0.006%).

Assay Dissolve about 0.2 g of the drug, accurately weighed, in 25 ml of dilute nitric acid. Add 80 ml of water and 2 ml of ammonium ferric sulfate IS, and titrate with ammonium thiocyanate (0.1 mol/L) VS. Each ml of ammonium thiocyanate (0.1 mol/L) VS is equivalent to 10.83 mg of mercuric oxide (HgO).

It contains not less than 99.0 per cent of mercuric oxide (HgO).

Action To drain pus, remove putrid tissues and to promote growth of new tissues.

Indications Carbuncles, sores, chancre and other malignant boils with dark-coloured putrid tissues, formation of fistulae or sinuses, constant purulence, and unhealed wounds.

Usage and dosage For external use only; appropriate quantity of very fine powder is used alone or mixed with other ingredients and made into powder or medicated threads.

Precaution Avoid oral administration because of its toxicity. Persistent external use is also prohibited.

Storage Preserve in a well closed container, protected from light and stored in a dry place.

Indigo Naturalis
(青黛, Qingdai)

Natural Indigo

Natural Indigo is the dried powder or mass prepared from the leaf or the stem and leaf of *Baphicacanthus cusia* (Nees) Bremek. (Fam. Acanthaceae), *Polygonum tinctorium* Ait. (Fam. Polygonaceae) or *Isatis indigotica* Fort. (Fam. Cruciferae).

Description A deep blue powder, light and puffy or irregular and porous masses, finely powdered on twisting. Odour, slightly grassy; taste, weak.

Identification (1) Burn gently a small quantity of the powder, a purplish-red smoke is produced.
(2) To a small quantity of the powder, add nitric acid dropwise, a brownish-red or yellowish brown colour is produced with effervescence.
(3) To 50 mg of the drug add 5 ml of chloroform, stir well and filter, the filtrate used as the test solution. Dissolve indigo CRS and indirubin CRS in chloroform to prepare a solution containing 1 mg of each per ml, used as the reference solution. Carry out the method for thin layer chromatography (Appendix Ⅵ B), using silica gel G as the coating substance and a mixture of benzene-chloroform-acetone (5∶4∶1) as the mobile phase. Apply separately to the plate 5-10 μl of each of the two solutions. After developing and removal of the plate, dry it in air. The blue spot and pale purplish-red spot in the chromatogram obtained with the test solution correspond in position and colour to the spots in the chromatogram obtained with the reference solution.

Water Carry out the determination of water (Appendix Ⅸ H, method 1), not more than 7.0 per cent caculated with reference to the dried drug.

Water-soluble pigment Shake 0.5 g of the powder with 10 ml of water and allow to stand for a moment; the water layer shows no deep blue colour.

Assay ***Indigo*** *Reference preparation* Sulfonate 20 mg of indigo CRS, accurately weighed, in a flask by adding 15 ml of sulfuric acid slowly and with constant stirring gently on a water bath at 80℃ for 1 hour. Allow to cool, transfer the solution slowly to a 200 ml volumetric flask containing a quality of water. Wash the flask and the residue with water. Combine the washing to the volumetric flask, add water to volume and mix well. Filter and discard the initial filtrate. Measure accurately 5 ml of the successive filtrate to a 50 ml volumetric flask, add water to volume and mix well (containing 10 μg of indigo per ml).

Preparation of standard curve Measure accurately 1, 2, 3, 4, and 5 ml of the reference solution respectively into a 10 ml volumetric flask, add water to volume and mix well. Carry out the method for spectrophotometry (Appendix Ⅴ A). Measure the absorbance at 610 nm and plot the standard curve, using absorbance as ordinate and concentration as abscissa.

Procedure Weigh accurately 0.4 g of the fine powder, carry out the procedure as described under "*Reference preparation*", beginning at the words "in a flask..." to "discard the initial filtrate. Measure accurately 5 ml of the successive filtrate". Transfer the filtrate to a 50 ml or 100 ml volumetric flask (adjust the absorbance to be within 0.20-0.45), add water to volume and mix well. Measure the absorbance at 610 nm and read out the weight of indigo (μg) in the test solution from the standard curve, and calculate the percentage content of $C_{16}H_{10}N_2O_2$.
It contains not less than 2.0% of indigo, calculated with reference to the dried drug.

Indirubin Weigh accurately 1.5 g of the fine powder in a stopper conical flask, accurately add 50 ml of trichloromethane, weigh, heat under reflux on a water bath, cool, weigh again, replenish the loss of the solvent with trichloromethane, mix well, filter, and use the successive filtrate as the test solution. Weigh accurately a quantity of indirubin CRS, add trichloromethane to produce a solution containing 0.07 mg of indirubin per ml, mix well, as the reference solution. Carry out the method for thin layer chromatography (Appendix Ⅵ B), using silica gel G as the coating substance and benzene, trichloromethane, and acetone (5∶4∶1) as the mobile phase, apply accurately to the plate 2 μl and 4 μl of the test solution, 1 μl and 3 μl of the reference solution alternatively. After developing and removal of the plate, dry in air, cover a glass plate with same size on the plate, and fix with adhesive. Carry out the thin layer chromatographic scanning method (Appendix Ⅵ B), scan at the wavelength of λs = 540 nm, λr = 700 nm. Measure the integration values of the absorbance from the test solution and the reference solution respectively, and calculate the content.
It contains not less than 0.13 per cent of indirubin ($C_{16}H_{10}N_2O_2$), calculated with reference to the dried drug.

Action To remove *toxic-heat*, cool blood, and relieve convulsion.

Indications Eruptive epidemic diseases; spitting of blood and epistaxis due to *heat* in the blood, chest pain and hemoptysis; ulcers in the mouth; mumps; pharyngitis, karyngitis; infantile convulsion.

Usage and dosage 1.5-3 g, used as an ingredient in pills or powder, appropriate quantity for external use.

Storage Preserve in a dry place.

Lapis Chloriti (青礞石, Qingmengshi)

Chlorite Schist

Chlorite Schist is a black mica schist or a carbonate schist of chlorite mica of metamorphic group. The drug is collected, removed from foreign matter.

Description *Black mica schist* Aggregates of scales or slices, in irregular flattened masses or long oblique masses, without distinct angularity; brownish-black or greenish-black, with glassy lustre. Texture soft, easily broken, fracture distinctly sliced. Powder of greenish-black scales (black mica), with star-like flash. Odour, slight; taste, weak.

Carbonate schist of chlorite mica Sliced or granular, aggregates grey or greenish-grey, intermingled with silvery or pale yellow scales, lustrous. Texture soft, easily broken. Powder of greyish-green scales (chlorite mica) and granules (mainly carbonate salts), scales with star-like flash, bubbling with dilute hydrochloric acid TS, and intensified on heating. Odour, slight; taste, weak.

Processing *Chlorite Schist* Eliminate foreign matter, pound to pieces.
Chlorite Schist (calcined) Calcine the clean chlorite schist as described under the method of calcining openly (Appendix Ⅱ D) to red thoroughly.

Action To eliminate phlegm to relieve cough and dyspnea, subdue the hyperactivity of the liver and arrest convulsion.

Indications Cough and dyspnea due to retained phlegm; epilepsy, mania, restlessness with distress in the chest, convulsion.

Usage and dosage 3-6 g, usually used as an ingredient in pills or powder for oral administration.

Storage Preserve in a dry place.

Lapis Micae Aureus (金礞石, Jinmengshi)

Mica-schist

Mica-schist is a rock schist or black mica schist of metamorphic group. The drug is collected, removed from foreign matter.

Description Aggregates of scales, in irregular masses or pieces, pieces 1-8 mm in diameter, masses 2-10 cm in diameter, 0.6-1.5 cm thick, without distinct angularity, brownish-yellow or yellowish-brown, with golden-yellow or silvery-white lustre. Texture fragile, easily broken to little flashy golden yellow pieces on twisting, with satiny feeling. Odour, slight; taste, weak.

Identification Heat a small quantity of the pieces on an iron plate, breaking in layers or small pieces and expanding 2-5 times in size, some scales curved like a leech, the colour pales, the weight decreases and floats on water.

Processing *Mica-schist* Eliminate foreign matter.

Mica-schist (calcined) Calcine the clean mica-schist as described under the method for calcining openly (Appendix Ⅱ D) to red thoroughly.

Action To eliminate phlegm and to relieve cough and dyspnea, subdue hyperactivity of the liver and arrest convulsions.

Indications Cough and dyspnea due to retention of sticky phlegm, irritability and constriction in the chest; epilepsy, mania, convulsion.

Usage and dosage 3-6 g, mostly used as an ingredient in pills or powder.

Storage Preserve in a dry place.

Lasiosphaera seu Calvatia (马勃, Mabo)

Puff-ball

Puff-ball is the dried sporophore of *Lasiosphaera fenzlii* Reich., *Calvatia gigantea* (Batsch ex Pers.) Lloyd or *Calvatia lilacina* (Mont. et Berk.) Lloyd (Fam. Lycoperdaceae). The drug is collected in summer and autumn when ripe, removed from adhering soil, and dried.

Description *Sporophore of Lasiosphaera fenzlii* Oblate or subspheroid, without sterile base, 15-20 cm in diameter. The outer covering greyish-brown to yellowish-brown, papery and often broken into pieces or all falling off. Fruiting body greyish-brown or brownish, closed, elastic, internally showing greyish-brown cotton-fibre-like filaments on tearing. The spores pully and unctuous to the touch. Odour, dusty; tasteless.

Sporophore of Calvatia gigantea Sterile base very small or absent. The remains of covering consisting of yellowish-brown membranous exoperidium and relatively thick greyish-yellow endoperidium, smooth, hard and fragile, falling off in pieces. Fruiting body pale bluish-brown and unctuous to the touch.

Sporophore of Calvatia lilacina Top-like or pressed to be oblate, 5-12 cm in diameter, sterile base well-developed. Covering thin, 2-layered, purplish-brown, coarsely shrivelled, with circular depressions, turned outward, top broken into small patches or partially falling off. Fruiting body purple.

Identification (1) Place the sample over a flame and shake slightly, the fine sparks are observed immediately, after going out, much white and dense smoke is produced.
(2) *Sporophore of Lasiosphaera fenzlii* Powder: Grey-brown. Capillitium long, brownish, branched, interwoven each other, 2-4.5 μm in diameter, thick-walled. Spores brown, globoid, 4.5-5 μm in diameter, with minute spines, 1.5-3 μm long.

Sporophore of Calvatia gigantea Powder: Pale bluish-brown. Capillitium slightly branched, rarely septate, 2.5-6 μm in diameter. Spores pale bluish-yellow, smooth or sometimes finely warted, 3.5-5 μm in diameter.

Sporophore of Calvatia lilacina Powder: Greyish-purple. Capillitium branched, septate, 2-5 μm in diameter, thick-walled. Spores 4-5.5 μm in diameter with minute spines.
(3) Moisten 1 g of the broken pieces in 8 ml of each of ethanol and sodium hydroxide solution (0.1 mol/L), dry at a low temperature, ignite gently and incinerate at 700℃, cool. Dissolve the residue in 10 ml of water, filter, the filtrate yields the reactions characteristic of phosphates (Appendix Ⅳ).
(4) To 1 g of the broken bits, add 40 ml of dichloromethane,

heat under reflux on a water bath for 1 hour, cool, and filter. Evaporate the filtrate to dryness, to the residue add 1 ml of dichloromethane as the test solution. Prepare a solution of 1 g of Lasiosphaera seu Calvatia reference drug in the same manner as the reference drug solution. Carry out the method for thin layer chromatography (Appendix Ⅵ B), using silica gel G as the coating substance and hexamethylene-acetone-ether (10∶1∶2) as the mobile phase, apply separately to the plate 5 μl of each the two solutions. After developing and removal of the plate, dry in air, examine under ultraviolet light at 365 nm. The main spots in the chromatogram obtained with the test solution correspond in position and colour to the spots obtained with the reference solution.

Water Carry out the determination of water (Appendix Ⅸ H, method 1), not more than 15.0 per cent.

Total ash Not more than 15.0 per cent (Appendix Ⅸ K).

Acid-insoluble ash Not more than 10.0 per cent (Appendix Ⅸ K).

Extractives Carry out the hot extraction method for determination of ethanol-soluble extractives (Appendix Ⅹ A), using dilute ethanol TS as the solvent, not less than 8.0 per cent.

Processing Eliminate foreign matter, and break to pieces.

Action To remove *heat* from the *lung* and ease sore throat, and arrest bleeding.

Indications Sore throat, cough and hoarseness caused by *wind-heat* in the *lung*; epistaxis and traumatic bleeding in external application.

Usage and dosage 1.5-6 g; appropriate quantity is applied topically.

Storage Preserve in a dry place, protected from dust.

Lignum Aquilariae Resinatum (沉香, Chenxiang)

Chinese Eaglewood Wood

Chinese Eaglewood Wood is the resin containing wood of *Aquilaria sinensis* (Lour.) Gilg (Fam. Thymelaeaceae). The drug is collected all the year round, removed from the part without resin, and dried in shade.

Description In irregular lumps and flakes, or helmet-shaped, sometimes in shreds. Externally lumpy, with scars of knife cutting, and showing a few of holes, and streaks formed by black-brown resin alternating with yellowish-white wood. Surface of holes and depressions mostly rottenwood-like. Texture relatively compact, fracture splintery. Odour, aromatic; taste, bitter.

Identification (1) Transverse section: Rays 1-2 cells wide, filled with brown resin. Vessels round-polygonal, 42-128 μm in diameter, someones containing brown resin. Xylary fibres polygonal, 20-45 μm in diameter, with slightly thickened and lignified walls. Interxylary phloem elongated-elliptical or strip-shaped, usually intersecting with rays, and the cells with thin and non-lignified walls, containing brown resin; a few of fibres scattered, some parenchymatous cells containing prisms of calcium oxalate.
(2) Microsublime the ethanol-soluble extractives obtained under Extractives, a yellowish-brown oily substance with strongly aromatic odour is produced. To the oily substance add 1 drop of hydrochloric acid, a small quantity of vanillin and 1-2 drops of ethanol, a cherry-red colour is gradually produced, and darkened on standing.

Extractives Carry out the method for determination of ethanol-soluble extractives (Appendix Ⅹ A, the hot extraction method), using ethanol as the solvent, not less than 10.0 per cent.

Processing Eliminate the white and rottenwood, split to small pieces; break to tiny pieces or pulverize to fine powder for use.

Action To promote the flow of *qi* and relieve pain, arrest vomiting by warming the stomach, and relieve dyspnea.

Indications Distension and pain in the chest and abdomen; vomiting or hiccuping due to *cold* in the stomach; dyspnea and adverse of qi in *kidney-deficiency* syndrome.

Usage and dosage 1.5-4.5 g, decocted later.

Storage Preserve in a well closed container, stored in a cool and dry place.

Lignum Dalbergiae Odoriferae (降香, Jiangxiang)

Rosewood

Rosewood is the dried heart wood of trunk and root of *Dalbergia odorifera* T. Chen (Fam. Leguminosae). The drug is collected all the year round, removed from the sap wood, and dried in the shade.

Description In subcylindrical or irregular pieces. Externally purplish-red or reddish-brown, cut surface with dense striations. Texture hard, oily. Odour, slightly aromatic; taste, slightly bitter.

Identification (1) Powder: Brownish-purple or yellowish-brown. Bordered pitted vessels very large, up to about 300 μm in diameter when intact, mostly broken, with large and distinct bordered pits, containing reddish-brown or yellowish-brown contents. Fibres in bundles, brownish-red, 8-26 μm in diameter, highly thick-walled, some fibre bundles surrounded by cells containing prisms of calcium oxalate, forming crystal fibres, walls of crystal cells unequally lignified and thickened. Prisms of calcium oxalate 6-22 μm in diameter. Xylary rays 1-2 cells wide, up to 15 cells high, walls slightly thickened, with relatively dense pits. Pigment masses reddish-brown, yellowish-brown or pale yellow.
(2) Heat under reflux 2 g of the powder in 20 ml of ether for 30 minutes, filter, expel ether of the filtrate, dissolve the residue in 1 ml of ethanol as the test solution. Prepare a solution with 2 g of Lignum Dalbergiae Odoriferae reference drug as the reference drug solution in the same manner. Carry out the method for thin layer chromatography (Appendix Ⅵ B), using silica gel G as the coating substance and a mixture of toluene, ether and chloroform (7∶2∶1) as the mobile phase. Apply separately to the plate 2 μl of each of the above two solutions. After developing and removal of the plate, dry in air. Spray with a mixture of 1% vanillin surfuric acid solution and dehydrated ethanol (1∶9), heat at 105℃ to the spots clear. The spots in the chromatogram obtained with the test solution correspond in position and colour to the spots in the chromatogram obtained with the reference drug solution.
(3) Carry out the method for thin layer chromatography (Appendix Ⅵ B), using silica gel G as the coating substance

and a mixture of toluene and ethyl acetate (2∶1) as the mobile phase. Apply separately to the plate 2 μl of each of the test solution and the reference drug solution obtained under Identification test (2). After developing and removal of the plate, dry in air, and examine under ultraviolet light at 365 nm. The fluorescent spots in the chromatogram obtained with the test solution correspond in position and colour to the spots in the chromatogram obtained with the reference drug solution.

Extractives Carry out the method for determination of ethanol-soluble extractives (Appendix Ⅹ A, the hot extraction method), using ethanol as the solvent, not less than 8.0 per cent.

Processing Eliminate foreign matter, split to small pieces, and pulverize to fine powder or cut into slices.

Action To relieve pain by promoting circulation of *qi* and blood, and arrest bleeding.

Indications Epigastric pain, costal and hypochondriac pain due to stagnancy of *qi* of the liver, angina pectoris, traumatic injuries and bleeding.

Usage and dosage 9-15 g, decocted later; for external use, appropriate quantity is ground into fine powder and applied topically.

Storage Preserve in a cool and dry place.

Lignum Santali Albi (檀香, Tanxiang)

Sandalwood

Sandalwood is the dried heart wood of trunk of *Santalum album* L. (Fam. Santalaceae).

Description In cylindrical woody segments, someones slightly curved, varying in length, usually about 1 m long, 10-30 cm in diameter. Externally pale yellow or yellowish-brown, fine and smooth, sometimes with nodal scars or longitudinal cracks, transversely cut surface brownish-yellow, showing oil stains, brown annual rings distinct or indistinct, longitudinally cut surface showing straight striations. Texture compact, uneasily broken. Odour, aromatic, strongly aromatic on burning; taste, weak, slightly pungent on chewing.

Identification (1) Transverse section: Vessels scattered singly, 2-3 aggregated occasionally. Xylary rays consisting of 1-2 rows of radially elongated cells. The differences between woody fibre and fibre tracheid indistinct. Xylary parenchymatous cells scattered singly or several aggregated, some containing prisms of calcium oxalate. Oil drops visible in vessels, ray cells and xylary parenchymatous cells.
(2) To the volatile oil obtained under the Assay, add ether to produce a solution containing 10 μl per ml as the test solution. Dissolve santalol CRS in ether to produce a solution containing 5 μl per ml (or to the volatile oil of Indian sandalwood add ether to produce a solution containing 10 μl per ml) as the reference solution. Carry out the method for thin layer chromatography (Appendix Ⅵ B), using silica gel G as the coating substance and a mixture of petroleum ether (60-90℃) and ethyl acetate (85∶15) as the mobile phase. Apply separately to the plate 10 μl of each of the above two solutions. After devoloping and removal of the plate, dry in air. Spray with *p*-dimethylaminobenzaldehyde solution (dissolve 0.25 g of *p*-dimethylaminobenzaldehyde in 50 g of glacial acetic acid, add 5 g of 85% phosphoric acid and 20 ml of water, mix well), heat at 80-90℃ to the spots clear. The purplish-blue spot in the chromatogram obtained with the test solution corresponds in position and colour to the spot in the chromatogram obtained with the reference solution.

Water Not more than 12.0 per cent (Appendix Ⅸ H, method 2).

Assay Carry out the method for the determination of volatile oil (Appendix Ⅹ D), using 30 g of the shavings (1 mm thick).
It contains not less than 3.0 per cent of volatile oil (ml/g).

Processing Eliminate foreign matter, cut into slices or saw into small sections, and split to small pieces.

Action To promote the flow of *heart-qi*, warm the spleen and stomach, whet appetite, and relieve pain.

Indications Pectoral and abdominal pain due to stagnation of *qi* with cold; epigastric pain, loss of appetite; angina pectoris in coronary heart disease.

Usage and dosage 2-5 g.

Storage Preserve in a cool and dry place.

Lignum Sappan (苏木, Sumu)

Sappan Wood

Sappan Wood is the dried heart wood of *Caesalpinia sappan* L. (Fam. Leguminosae). The drug is collected mostly in autumn, removed from the white sap wood and dried.

Description Long cylindrical or semicylindrical owing to cutting lengthwise, 10-100 cm long, 3-12 cm in diameter. Externally yellowish-red to brownish-red, with traces of knife cutting, usually showing longitudinal cracks. Texture compact and hard. Transversely cut surface somewhat lustrous, annual rings distinct, sometimes dark brown, loose and bright-dotted pith visible. Odour, slight; taste, slightly astringent.

Identification (1) Transverse section: Rays 1-2 cells wide. Vessels up to about 160 μm in diameter, usually containing yellowish-brown or reddish-brown contents. Xylary fibres mostly polygonal, with extremely thickened walls. Parenchymatous cells in xylem thick-walled and lignified, sometimes containing prisms of calcium oxalate. Parenchymatous cells in pith irregularly polygonal, varying in size, walls slightly lignified and pitted.
(2) To 10 g of the powder add 50 ml of water, shake and stand for 4 hours, filter, the filtrate showing orange red, and a yellowish-green fluorescence is produced under ultravoilet light at 365 nm. To 5 ml of the filtrate add 2 drops of sodium hydroxide TS, a scarlet colour is produced, and a blue fluorescence is produced under ultraviolet light at 365 nm. The solution gives an orange colour on acidifying with hydrochloric acid and shows a yellowish-green fluorescence under ultraviolet light at 365 nm.
(3) To 1 g of the powder add 10 ml of ethanol, ultrasonicate for 30 minutes, filter, use the filtrate as the test solution. Prepare a solution with 1 g of Lignum Sappan reference drug in the same manner as the reference drug solution. Carry out the method for thin layer chromatography (Appendix Ⅵ B), using silica gel G mixed with sodium carboxymethylcellulose as the coating substance and a mixture of chloroform, acetone and formic acid (8∶4∶1) as the mobile phase. Apply separately to the plate 2 μl of

each of the above two solutions. After developing and removal of the plate, dry in air, and examine in daylight 12 hours later. The spots in the chromatogram obtained with the test solution correspond in position and colour to the spots in the chromatogram obtained with the reference drug solution.

Water Carry out the water for determination of water (Appendix Ⅸ H, method 2), not more than 12.0 per cent.

Extractives Carry out the hot extraction method for determination of ethanol soluble extractives (Appendix Ⅹ A), using dilute ethanol TS as the solvent, not more than 10.0 per cent.

Processing Saw into sections about 3 cm long, then split to pieces or pulverize to coarse powder.

Action To promote blood circulation and remove blood stasis, and to cause subsidence of swelling and relieve pain.

Indications Amenorrhea, dysmenorrhea, blood stasis after delivery; pricking pain in the chest and abdomen, traumatic swelling and pain.

Usage and dosage 3-9 g.

Precaution Used with caution in pregnancy.

Storage Preserve in a dry place.

Limonitum
(禹余粮，Yuyuliang)

Limonite

Limonite is a mineral of limonite of hydroxides, containing mainly basic ferric oxide [FeO(OH)]. The drug is collected, and removed from foreign matter.

Description Aggregates of masses, irregularly rhombic. 5-10 cm long, 1-3 cm thick. Externally reddish-brown, greyish-brown or pale brown, often uneven or with yellow powder attached. Fracture mostly showing layered striations alternated with dark brown and pale brown or pale yellow, the layers varying in hardness, the soft part can be cut with nail. Texture hard and heavy. Odour, slight; tasteless, no sandy feeling on chewing.

Identification To 0.1 g of the powder add 2 ml of hydrochloric acid, shake, allow to stand, the supernatant yields the reactions characteristic of ferric and ferrous salts (Appendix Ⅳ).

Processing *Limonitum* Eliminate foreign matter, wash clean, and dry.

Limonitum (calcined) Calcine the clean pieces of Limonitum as described under the method for calcining and quenching (Appendix Ⅱ D) to red thoroughly, using 30 kg of vinegar per 100 kg of Limonitum.

Action To relieve diarrhea and arrest bleeding as an astringent.

Indications Chronic diarrhea, chronic dysentery; abnormal uterine bleeding, morbid leukorrhea.

Usage and dosage 9-15 g, to be decocted or made into pills or powder.

Precaution Used with caution in pregnancy.

Storage Preserve in a dry place.

Magnetitum
(磁石，Cishi)

Magnetite

Magnetite is a mineral of oxides of spinel group, containing mainly ferroferric oxide (Fe_3O_4). The drug is collected, removed from foreign matter.

Description Aggregates of masses, in irregular masses, or slightly subsquare, frequently with angularities. Greyish-black or brown; streak black, with lustre of metal. Texture hard and heavy, fracture uneven. Magnetic. Odour, earthy; tasteless.

Identification To 0.1 g of the powder add 2 ml of hydrochloric acid, shake, allow to stand. The supernatant yields the reactions characteristic of ferric and ferrous salts (Appendix Ⅳ).

Assay Heat to boil gently about 0.25 g of the fine powder, accurately weighed, in 15 ml of hydrochloric acid and 3 ml of 25% potassium fluoride solution in conical flask, covered with a watch glass. Add dropwise 6% stannous chloride solution, shake constantly until the drug is decomposed completely with only white residue left at the bottom of the flask. Stop to heat, wash the watch glass and the inner walls of the flask with a small quantity of water, and add dropwise 6% stannous chloride solution while hot until a pale yellow colour is produced (if stannous chloride is in excess, add dropwise potassium permanganate TS until a pale yellow colour is produced). Add 100 ml of water and 15 drops of 25% sodium tungstate solution, and add dropwise 1% titanium chloride solution until a blue colour is produced, then add dropwise and cautiously potassium dichromate (0.01667 mol/L) VS until the blue colour disappears. Add immediately 10 ml of a mixture of sulfuric acid, phosphoric acid and water (2 : 3 : 5) and 5 drops of sodium diphenylamine sulfonate IS, and titrate with potassium dichromate (0.01667 mol/L) VS until the colour turns to stable bluish-purple. Each ml of potassium dichromate (0.01667 mol/L) VS is equivalent to 5.585 mg of iron (Fe).

It contains not less than 50.0 per cent of iron (Fe).

Processing *Magnetitum* Eliminate foreign matter, pound to pieces.

Magnetitum (calcined) Calcine the clean Magnetitum as described under the method for calcining and quenching (Appendix Ⅱ D) to red thoroughly, quench with vinegar and grind to coarse powder, using 30 kg of vinegar per 100 kg of Magnetitum.

Action To subdue hyperactivity of the liver, improve hearing and eyesight, anchor the mind, and alleviate dyspnea.

Indications Dizziness, blurring of vision, tinnitus, impairment of hearing, palpitation, insomnia, dyspnea due to diminished function of the kidney.

Usage and dosage 9-30 g, decocted first.

Storage Preserve in a dry place.

Margarita
(珍珠, Zhenzhu)

Pearl

Pearl is the pearl formed in such bivalve as *Pteria martensii* (Dunker) (Fam. Peteriidae), *Hyriopsis cumingii* (Lea) or *Cristaria plicata* (Leach) (Fam. Unionidae), etc., when it is irritated by foreign substance. The drug is collected from the animal, washed and dried.

Description Subspheroidal, oblong, ovoid or clavate, 1.5-8 mm in diameter. Externally whitish, light pink, light yellowish-green or light blue, translucent, smooth or slightly uneven with characteristic lustre. Texture hard, laminating veins on broken surface. Odour, slight; tasteless.

Identification (1) Powder: Whitish. Irregular pieces, translucent, with rainbow like lustre. Granular in surface view, piled up by several to tens of thin layers, laminae densely arranged, dense laminated lines or finely undulated-striations can be seen. The ground slices marked with concentric striations.
(2) To the powder add dilute hydrochloric acid, a lot of bubbles are produced immediately, filter, the filtrate yields the reactions characteristic of calcium salts (Appendix Ⅳ).
(3) Examine the drug under ultraviolet light at 365 nm, pale bluish-violet or bright yellowish-green fluorscence is shown, usually relatively bright in the peripheral zone.

Processing *Margarita* Wash clean and dry.

Powder of Margarita Take clean Margarita, grind and make it into finest powder as described under the method for levigation (Appendix Ⅱ D).

Action To anchor the mind, eliminate corneal opacity, counteract *toxicity* and promote the growth of new tissues.

Indications Palpitation and insomnia; convulsion, epilepsy; nebula; skin ulcerations difficult to heal.

Usage and dosage 0.1-0.3 g, mostly used as an ingredient in pills or powder; appropriate quantity for external use.

Storage Preserve in well closed containers.

Medulla Junci
(灯心草, Dengxincao)

Common Rush

Common Rush is the dried stem pith of *Juncus effusus* L. (Fam. Juncaceae). The stem is collected from late summer to autumn, dried in the sun, the pith is taken out, straightened and ligated into small bundle.

Description Slenderly cylindrical, up to 90 cm long, 0.1-0.3 cm in diameter. Externally white or pale yellowish—white, with fine longitudinal striations. Texture light, soft, slightly elastic, easily broken, fracture white. Odour, slight; tasteless.

Identification (1) Powder: Almost white. Parenchymatous cells stellate, connecting with the branches to form air cavities in triangular or quadrilateral shape; branches 4-8, 5-15 μm long, 5-12 μm wide, walls slightly thickened, fine pits occasionally observed, connected walls thin, sometimes beaded.
(2) Heat under reflux 1 g of the powder with 10 ml of methanol, cool, filter, evaporate the filtrate to dryness, wash the residue with 2 ml of ether, discard the ether solution, dissolve the residue in 1 ml of methanol as the test solution. Prepare a solution with 1 g of Medulla Junci reference drug in the same manner as the reference drug solution. Carry out the method for thin layer chromatography (Appendix Ⅵ B), using silica gel G as the coating substance and a mixture of cyclohexane and ethyl acetate (10:7) as the mobile phase. Apply separately to the plate 3-5 μl of the test solution and 3 μl of the reference drug solution. After developing and removal of the plate, dry in air. Spray with phosphomolybdic acid TS, heat at 105℃ to the spots clear. The main spots in the chromatogram obtained with the test solution correspond in position and colour to the spots in the chromatogram obtained with the reference drug solution.

Water Carry out the method for determination of water (Appendix Ⅸ H, method 1), using 0.5 g of the drug, not more than 11.0 per cent.

Extractives Take 0.5 g of the drug, carry out the method for determination of ethanol-soluble extractives (Appendix Ⅹ A, the hot extraction method), using dilute ethanol TS as the solvent, not less than 5.0 per cent.

Processing *Medulla Junci* Eliminate foreign matter, and cut into sections.

Medulla Junci (carbonized) Calcine the clean Medulla Junci as described under the method for carbonizing by calcining (Appendix Ⅱ D).

Action To eliminate excessive *heart-qi*, and induce urination.

Indications Fidgetness and insomnia with oliguria and painful difficult urination or with ulceration in the mouth or on the tongue.

Usage and dosage 1-3 g.

Storage Preserve in a dry place.

Medulla Stachyuri
Medulla Helwingiae
(小通草, Xiaotongcao)

Stachyurus or Japanese Helwingia Pith

Stachyurus or Japanese Helwingia Pith is the dried stem pith of *Stachyurus himalaicus* Hook. f. et Thoms., *Stachyurus chinensis* Franch. (Fam. Stachyuraceae) or *Helwingia japonica* (Thunb.) Dietr. (Fam. Cornaceae). The stem is collected in autumn, cut into sections, the pith is taken out when fresh, straightened and dried in the sun.

Description *Pith of Stachyurus chinensis and Stachyurus himalaicus* Cylindrical, 30-50 cm long, 0.5-1 cm in diameter. Externally white or pale yellow, without striations. Texture light, lax and soft, deformed when kneaded, elastic, easily broken, fracture even and without hollow, silvery. Unctuous on touching after soaking. Odour, slight and tasteless.

Pith of Helwingia japonica Surface with shallow longitudinal striations. Texture relatively hard, uneasily

deformed when kneaded. Not unctuous on touching after soaking.

Identification Transverse section:
Pith of Stachyurus chinensis and Stachyurus himalaicus All composed of rounded, elliptical or polygonal parenchymatous cells, sparsely pitted; mucilage cells scattered. *Pith of Stachyurus chinensis* with a few of clusters of calcium oxalate, and *Pith of Stachyurus himalaicus* without clusters.

Pith of Helwingia japonica Parenchymatous cells with relatively distinct pits, containing colourless liquid drops and a few of clusters of calcium oxalate; mucilage cells absent.

Processing Eliminate foreign matter and cut into sections.

Action To remove *heat*, induce urination, and promote lactation.

Indications Oliguria, urinary infection; galactostasis.

Usage and dosage 2.5-4.5 g.

Storage Preserve in a dry place.

Medulla Tetrapanacis (通草, Tongcao)

Ricepaperplant Pith

Ricepaperplant Pith is the dried stem pith of *Tetrapanax papyriferus* (Hook.) K. Koch (Fam. Araliaceae). The stem is collected in autumn, cut into sections. The pith is taken out when fresh, straightened, and dried in the sun.

Description Cylindrical, 20-40 cm long, 1-2.5 cm in diameter. Externally white or pale yellow, with shallow longitudinal furrows. Texture light, soft and loose, slightly elastic, easily broken, fracture even, with silvery lustre, with a hollow, 0.3-1.5 cm in diameter, or translucent membrane in the middle, arranged in scalariform in longitudinally cut surface, solid ones visible occasionally. Odour, slight; taste, weak.

Identification Transverse section: All composed of elliptic, subrounded or subpolygonal parenchymatous cells. The outer cells relatively small, pits obvious. Someones containing clusters of calcium oxalate, 15-64 μm in diameter.

Processing Eliminate foreign matter, cut into thick slices.

Action To remove *heat*, induce urination, and stimulate lactation.

Indications Dysuria with difficult painful urination; edema and oliguria; lack of milk secretion.

Usage and dosage 3-5 g.

Precaution Used with caution in pregnancy.

Storage Preserve in a dry place.

Mel (蜂蜜, Fengmi)

Honey

Honey is a saccharine fluid deposited by *Apis cerana* Fabricus or *Apis mellifera* Linnaeus (Fam. Apidae). The drug is collected from spring to autumn, and filtered.

Description Translucent, lustrous and viscid, white to pale yellow or orange yellow to yellowish-brown, white granular crystals gradually separated out on keeping or on cooling. Odour, aromatic; taste, very sweet.

Relative density Dissolve any crystal on a water bath at a temperature below 60℃, if the crystal has separated out in the samples examined, mix well. Cool to 25℃ and carry out the method for the determination of relative density (Appendix Ⅶ A), not less than 1.349.

Acidity Mix 10 g with 50 ml of freshly boiled and cooled water, add 2 drops of phenolphthalein IS and 4 ml of sodium hydroxide solution (0.1 mol/L), and a pink colour is produced, persisting for 10 seconds.

Starch and dextrin Boil 2 g with 10 ml of water, cool, add 1 drop of iodine TS, and no blue, green or reddish-brown colour is produced.

5-(Hydroxyl methyl) furfural Place 5.0 g, weighed accurately, in a 50 ml volumetric flask, add 0.5 ml of each of 15 % potassium ferrocynide solution and 30 % zinc acetate solution, dilute with water to volume (add 1 drop of ethanol if the froth is produced), and mix well. Filter with the dry filter paper, discard the initial filtrate, and transfer separately 5 ml of each of the filtrate, measured accurately, to two tubes with stopper. To one tube add 5.0 ml of water and mix well as the test solution. To another tube add 5.0 ml of 0.2% sodium hydrogen sulfite solution as the blank solution. Carry out the method for ultraviolet spetrophotometry and colourimetry (Appendix Ⅴ A), and measure the absorbance at 284 nm and 336 nm.
The value of subtraction between two absorbances is not more than 0.34.

Assay *Standardization of alkaline cupric tartrate TS* Place about 0.5 g of glucose, previously dried to 105℃ to constant weight and accurately weighed, in a 100 ml volumetric flask. Add water to dissolve, dilute with water to volume, and mix well. Place 20 ml, accurately measured, of alkaline cupric tartrate TS in a conical flask, heat and keep to boil gently. Titrate with the above glucose solution until the blue colour almost disappears. Boil for further 1 minute, add 1 drop of 1% methylene blue solution and continue to titrate slowly until the blue colour disappears. Estimate the approximate volume (ml) of glucose solution required for the titration. Transfer 20 ml, accurately measured, of alkaline cupric tartrate TS to another conical flask, add the glucose solution from a burette until about 1 ml before the end point is reached. Carry out the previous titration beginning at the words "heat and keep to boiling gently...". Calculate the weight of anhydrous glucose (g) equivalent to 1 ml of alkaline cupric tartrate TS.

Procedure Place about 1 g, accurately weighed, in a 250 ml volumetric flask. Add water to dissolve dilute with water to volume, mix well and transfer to a burette. Carry out the titration described under the standardization of alkaline cupric tartrate TS, beginning at the words "transfer 20 ml, accurately measured, of alkaline cupric tartrate TS,...". Calculate the content of reducing sugar as follows:

$$\%\ \text{of reducing sugar} = \frac{\dfrac{\text{Weight (g) of anhydrous glucose equivalent to each ml of alkaline cupric tartrate TS} \times 20}{\text{Sample weight (g)}}}{\dfrac{250}{\text{Volume (ml) consumed in the titration}}} \times 100\%$$

It contains not less than 64.0 per cent of reducing sugar.

Action To reinforce the spleen and stomach, relieve

dryness, and pain, and counteract *toxicity*.

Indications Epigastric pain alleviated after meals or by pressing; dry cough; constipation; external use for sores, scalds and burns.

Usage and dosage 15-30 g.

Storage Preserve in a cool place.

Mirabilitum Praeparatum (西瓜霜, Xiguashuang)

Mirabilite Preparation

Mirabilite Preparation is prepared from the ripped flesh fruit of *Citrullus lanatus* (Thunb.) Mansfeld. (Fam. Cucurbitaceae) and glauber's salt by processing with frost-like powder making.

Description A almost white or yellowish-white crystalline powder. Odour, slight; taste, salty.

Identification The aqueous solution yields the characteristic reactions of sodium salts and sulfates (Appendix Ⅳ).

Heavy metals To 1.0 g of the drug, carry out the limit test for heavy metals (Appendix Ⅸ E, method 2), not more than 10 ppm.

Arsenic To 0.20 g of the drug, dissolved in 23 ml of water, add 5 ml of hydrochloric, heat to dissolve, cool, carry out the limit test for arsenic (Appendix Ⅸ F, method 1), not more than 10 ppm.

Assay Dissolve about 0.4 g of the drug, weighed accurately, in 150 ml of water, constantly shaking for 10 minutes, filter, wash the precipitate with 50 ml of water divided into three times, filter, and merge together the filtrates, add I ml of hydrochloric acid, boil, and add about 20 ml of hot barium chloride TS with constant stirring until no more precipitate is produced. Heat on a water bath for 30 minutes, stand for 1 hour, filter through an ashless filter paper or a tared sintered glass filter. Wash the precipitate with water for several times until the washings show no reaction characteristic of chloride. Dry and ignite the precipitate to constant weight. Weigh accurately, multiply the weight by 0.6086 to obtain the content of sodium sulfate (Na_2SO_4).

It contains not less than 95.0 per cent of sodium sulfate (Na_2SO_4), calculated with reference to the dried drug.

Action To clear *heat* and purge *fire*, reduce swelling and relieve pain.

Indications Swollen and painful throat, laryngalgia and aphtha.

Usage and dosage Appropriate quantity for oral taking or in powder form for external use.

Storage Preserve in tightly closed containers, stored in a dry place.

Moschus (麝香, Shexiang)

Musk

Musk is the dried secretion of the musk sac of adult male *Moschus berezovskii* Flerov, *Moschus sifanicus* Przewalski or *Moschus moschiferus* Linnaeus (Fam. Cervidae). Usually the wild musk deer is hunted from winter to next spring. The musk sac is cut off, dried in air, which is known as "Maokeshexiang" (musk with hairy sac). The musk sac is opened, removed from the sac wall, the drug thus obtained is known as "Shexiangren (musk)". For the domestic musk deer, the "Shexiangren" is taken from the musk sac directly, dried in air or in desiccator.

Description *Maokeshexiang* In oblate or subellipsoidal sac, 3-7 cm in diameter, 2-4 cm thick. The skin of the opening side leathery, brown, slightly even, with dense white or greyish-brown short hairs around the centre from both sides. A small sac opening located in the centre. The skin of the other side is brown and slight purple dermal membrane, slightly shrunken, muscle fibers occasional found, slightly elastic. After opening of the sac, the middle dermal membrane brown or greyish-brown, translucent; the inner dermal membrane brown, with granular or powdery "Shexiangren", a small amount of thin hairs and dropped inner membrane, [commonly known as "Yinpi" (silver membrane)].

Shexiangren For samples taken from the wild musk deer, texture soft, oily and lax; the irregularly spheroidal or granules commonly known as "Dangmenzi" (dangmen granule), the surface usually purplish-black, oily and bright, with slight pocked stripes, fracture dark brown or yellowish-brown. The powder usually brown or yellowish-brown, with a small amount of dropped inner membrane and thin hairs. For the samples taken from the domestic musk deer, granular, in short strips or irregular masses; the surface uneven, purplish-black or dark brown, oily and slightly lustrous, with a small amount of hairs and dropped inner membrane. Odour, characteristic and strongly aromatic; taste, slightly pungent, bitter and salty.

Identification (1) Insert a specially made grooved needle into "Maokeshexiang" from the sac opening, turn the needle to get "Shexiangren", and observe immediately. The "Shexiangren" in the groove swells gradually, and gets beyond the surface of the groove. This phenomenon is commonly known as"over the groove". "Shexiangren" oily, granules lax, without acute angle. Odour, strong aromatic. No foreign matter such as fibres etc. or unusual odour.

(2) Put a small amount of "Shexiangren" powder in palm, moisten the powder by water. The powder can be rubbed into a ball with hands, disintegrate when gently kneaded by fingers. It does not stick or stain the hand or bond into masses.

(3) Ignite small amount of "Shexiangren" in a red-hot crucible. The substance cracks at first, then melts and swells to form pearl-like foam with strongly characteristic and aromatic odour. No burnt smell of hairs or flesh and flame or spark is observed. The residue shows white or greyish-white in colour.

(4) "Shexiangren" powder brown or yellowish-brown. In translucent or transparent masses aggregated from numerous amorphus granules, pale yellow or pale brown; with cubic, cylindrical, octahydronal or irregular crystals embedded or scattered in the mass; rounded oil drops visible, hairs and inner membrane tissues occasional.

(5) Carry out the test under Assay, the retention time of the peak in the chromatogram obtained with the test solution corresponds with that in the chromatogram obtained with the reference solution.

Foreign matter No animal or plant tissues, minerals or other fales substance; no mildewing allowable.

Loss on drying Weigh accurately 1 g of the drug, dry to

constant weight in vacuum over phosphorus pentoxide in a desiccator, loses not more than 35.0 per cent of its weight (Appendix Ⅸ G).

Total ash Carry out the method for determination of ash (Appendix Ⅸ K), using 0.2 g of the drug, weighed accurately, not more than 6.5 per cent, calculated with reference to the dried drug.

Assay Carry out the method for gas chromatography (Appendix Ⅵ E).

Chromatographic system and system suitability Use 2% phenylmethyl polysiloxane (OV-17) as the stationary phase; maintain the column temperature at 200±10℃. The number of theoretical plates of the column is not less than 1500, calculated with the reference to the peak of muscone.

Reference solution Dissolve a quantity of muscone CRS, weigh accurately, in dehydrated ethanol to produce a solution containing 1.5 mg per ml.

Test solution Weigh accurrately 0.2 g of the powder obtained under the test of Loss on drying, add accurately 2 ml of dehydrated ethanol, stopper tightly, and shake. Allow to stand for 1 hour, filter and use the filtrate.

Procedure Inject accurately 2 μl of each of the reference solution and the test solution, respectively, into the column, determine and calculate the content.
It contains not less than 2.0 per cent of muscone ($C_{16}H_{30}O$), calculated with reference to the dried drug.

Processing Remove the sac wall of "Maokeshexiang", take out the "Shexiangren" and eliminate foreign matter. Pulverize before use.

Action To restore consciousness, activate blood circulation and stimulate menstruation, cause subsidence of swelling, and relieve pain.

Indication Loss of consciousness in febrile diseases, stroke, syncope and attack by noxious factors; amenorrhea, masses in the abdomen; dystocia; sudden attack of precordial and abdominal pain; carbuncles, lymphadenitis; sore throat; traumatic pain; numbness and pain in arthritis.

Usage and dosage 0.03-0.1 g, mostly used as an ingredient in pills or powder; appropriate quantity for external use.

Precaution Contraindicated in pregnancy.

Storage Preserve in well closed containers, stored in a cool and dry place, protected from light, moisture and moth.

Mylabris
(斑蝥, Banmao)

Blister Beetle

Blister Beetle is the dried body of *Mylabris phalerata* Pallas or *Mylabris cichorii* Linnaeus (Fam. Meloidae). The drug is collected in summer or autumn, suffocated or scalded by boiling water to death, and dried in the sun.

Description *Body of Mylabris phalerata* Oblong, 1.5-2.5 cm long, 0.5-1 cm wide. The head and the mouth parts curved downward, with a pair of relatively large compound eyes and a pair of antennae which usually fallen off. A pair of leathery elytra on the dorsum, black, with three yellow or brownish-yellow transverse stripes; a pair of transparent brownish membrane-like hind wings beneath the elytra. The thorax and abdomen pitch-black, with three pairs of legs at the thorax. Odour, characteristic stinking.

Body of Mylabris cichorii Body size relatively small, 1-1.5 cm long.

Identification To 3 g of the powder add 20 ml of chloroform, shake, macerate for 2 hours, and filter. Evaporate the filtrate to dryness, wash the residue with three 5-ml quantities of petroleum ether (30-60℃), carefully discard the supernatant. Dissolve the residue in 1 ml of chloroform as the test solution. Dissolve cantharidin CRS in chloroform to produce a solution containing 5 mg per ml as the reference solution. Carry out the method for thin layer chromatography (Appendix Ⅵ B), using silica gel G as the coating substance and a mixture of chloroform and acetone (98:2) as the mobile phase. Apply separately 5 μl of each of the two solutions to the plate. After developing and removal of the plate, dry in air. Spray with a 0.1% solution of bromocresol virid in ethanol and heat to the spots distinct. The spot in the chromatogram obtained with the test solution corresponds in position and colour to the spot in the chromatogram obtained with the reference solution.

Assay Carry out the method for gas chromatography (Appendix Ⅵ E).

Chromatographic system and system suitability Use 3.5 % SE-30 as the stationary phase; maintain the column temperature at 175±10 ℃. The number of theoretical plates of the column is not less than 2600, calculated with the reference to the peak of cantharidin.

Reference solution Dissolve a quantity of cantharidin CRS, accurately weighed, in chloroform to produce a solution containing 1 mg per ml as the reference solution. Dilute if necessary.

Test solution Weigh accurately about 1 g of the coarse powder in a stoppered conical flask, add 30 ml of chloroform, shake for 15 minutes, allow to stand for 6 hours, and filter. Transfer the filtrate to a 50 ml volumetric flask, wash the residue and the filter paper with chloroform, combine the washings to the same flask. Dilute with chloroform to volume, and mix well.

Procedure Inject accurately 2 μl of each of the reference solution and the test solution, respectively, into the column, determine and calculate the content.
It contains not less than 0.35 per cent of cantharidin ($C_{10}H_{12}O_4$).

Processing *Mylabris* Eliminate the foreign matter.

Mylabris (prepared with rice) Stir-bake clean Mylabris with rice until the colour of rice becomes yellowish-brown, take out, eliminate the head, wings and legs. To each 10 kg of Mylabris add 2 kg of rice.

Action To eliminate blood stasis and masses and ulcers, and induce blisters to get rid of toxins.

Indications Masses in the abdomen, cancer, chronic tinea, scrofula, vegetation, abscesses without diabrosis, malignant sore and slough.

Usage and dosage 0.03-0.06 g, mostly used as an ingredient in pills or powder after processed; for external use, appropriate quantity is ground into powder or steeped into wine or vinegar or prepared into ointment for topical application.

Precaution Very poisonous. Be cautious for oral administration. Contraindicated in pregnancy.

Storage Preserve in a ventilated dry place, protected from moth.

Natrii Sulfas
(芒硝，Mangxiao)

Sodium Sulfate

Sodium Sulfate is a crystalline substance purified from a mineral of sulfates of Glauber's salts group, containing mainly hydrated sodium sulfate ($Na_2SO_4 \cdot 10H_2O$).

Description Prismatical, rectangular or irregular masses, and granules. Colourless and transparent, or almost white and translucent. Texture fragile and easily broken, fracture with glassy lustre. Odour, slight; taste, salty.

Identification The aqueous solution yields the reactions characteristic of sodium salts and sulfates (Appendix Ⅳ).

Iron and Zinc Dissolve 5 g of the drug in 20 ml of water, add 2 drops of nitric acid, boil for 5 minutes, neutralize with sodium hydroxide TS, then add 1 ml of dilute hydrochloric acid TS, 1 ml of potassium ferrocyanide TS and a quantity of water to 50 ml, mix well. Allow to stand for 10 minutes, no turbidity or blue colour is produced.

Magnesium Dissolve 2 g of the drug in 20 ml of water, add 1 ml of each of ammonia TS and disodium hydrogen phosphate TS, no turbidity is produced within 5 minutes.

Loss on drying When dried to constant weight at 105℃, loses 51.0-57.0 per cent of its weight (Appendix Ⅸ G).

Heavy metals Dissolve 2.0 g of the drug in 2 ml of dilute acetic acid TS, add a quantity of water to 25 ml, carry out the limit test for heavy metals (Appendix Ⅸ E, method 1), not more than 10 ppm.

Arsenic Dissolve 0.20 g of the drug in 23 ml of water, add 5 ml of hydrochloric acid, carry out the limit test for arsenic (Appendix Ⅸ F), not more than 10 ppm.

Assay Dissolve about 0.4 g of the drug, weighed accurately, in 200 ml of water, add 1 ml of hydrochloric acid, boil, and add about 20 ml of hot barium chloride TS with constant stirring until no more precipitate is produced. Heat on a water bath for 30 minutes, stand for 1 hour, filter through an ashless filter paper or a tared sintered glass filter. Wash the precipitate with water for several times until the washings show no reactions characteristic of chloride. Dry and ignite the precipitate to constant weight. Weigh accurately, multiply the weight by 0.6086 to obtain the content of sodium sulfate (Na_2SO_4).
It contains not less than 99.0 per cent of sodium sulfate (Na_2SO_4), calculated with reference to the dried drug.

Action To relax bowels and purge *heat*, and remove *fire* and cause subsidence of swelling.

Indications Constipation and abdominal pain caused by excessive *heat*; appendicitis.
External use: Mastitis; painful swollen hemorrhoids.

Usage and dosage 6-12 g, dissolved in decoction for oral administration; appropriate quantity for external use.

Precaution Contraindicated in pregnancy. Incompatible with Rhizoma Sparganii.

Storage Preserve in a well closed container, stored at a temperature below 30℃, protected from efflorescing.

Natrii Sulfas Exsiccatus
(玄明粉，Xuanmingfen)

Exsiccated Sodium Sulfate

Exsiccated Sodium Sulfate is obtained from Glauber's salt by efflorescencing, containing mainly sodium sulfate (Na_2SO_4).

Description A white powder; odour, slight; taste, salty; hygroscopic.

Identification The aqueous solution yields the characteristic reactions of sodium salts and sulfates (Appendix Ⅳ).

Iron and Zinc, Magnesium Carry out the tests described under Natrii Sulfas, using a half quantity, comply with the requirements.

Heavy metals Dissolve 1.0 g of the powder in 2 ml of dilute acetic acid TS, add a quantity of water to 25 ml. Carry out the limit test for heavy metals (Appendix Ⅸ E, method 1), not more than 20 ppm.

Arsenic Dissolve 0.10 g of the powder in 23 ml of water, and add 5 ml of hydrochloric acid. Carry out the limit test for arsenic (Appendix Ⅸ F), not more than 20 ppm.

Assay Weigh accurately about 0.3 g of the powder, previously dried at 105℃ to constant weight, carry out the assay described under Natrii Sulfas.
It contains not less than 99.0 per cent of sodium sulfate (Na_2SO_4), calculated with reference to the dried drug.

Action To relax the bowels and purge *heat*, and remove *fire* and cause the subsidence of swelling.

Indications Constipation and abdomal pain caused by excessive *heat*.
External use: Sore throat, ulcers on the mouth and tongue, swelling and pain of the gums, conjunctivitis, carbuncles, erysipelas.

Usage and dosage 3-9 g; for external use, appropriate quantity is dissolved in water for washing or ground into powder for insufflation into the mouth or throat.

Precaution Contraindicated in pregnancy.

Storage Preserve in a tightly closed container, protected from moisture.

Nidus Vespae
(蜂房，Fengfang)

Honeycomb

Honeycomb is the honeycomb of *Polistes olivaceous* (DeGeer), *Polistes japonicus* Saussure or *Parapolybia varia* Fabricius (Fam. Vespidae). The drug is collected in autumn or winter, dried in the sun, or steamed briefly, removed from dead wasps and pupae, and dried in the sun.

Description In disc-shaped or irregular flattened pieces, some nearly lotus receptacle-shaped, varying in size. Externally greyish-white or greyish-brown. Ventral side with numerous regular hexagonal openings of cells, the openings 3-4 mm or 6-8 mm in diameter; dorsal side with 1 or several black short stalks. Texture light and tenacious,

slightly elastic. Odour, slight; taste, pungent and weak. The honeycomb of fragile or hard in texture should not be used for medicine.

Processing Eliminate foreign matter, cut into pieces.

Action To dispel *wind*, counteract *toxicity*, kill microorganisms, and relieve itching.

Indications Toothache due to caries; sores, ulcers, mastitis, scrofula; ringworms, tinea unguium.

Usage and dosage 3-5 g; for external use, appropriate quantity is ground into powder and applied topically after mixed with oil or made into a decoction for gargling and washing.

Storage Preserve in a ventilated dry place, protected from pressure and moth.

Nodus Nelumbinis Rhizomatis (藕节, Oujie)

Lotus Rhizome Node

Lotus Rhizome Node is the dried node of *Nelumbo nucifera* Gaertn. (Fam. Nymphaeaceae). The drug is collected in autumn and winter, cut off, washed clean, dried in the sun, and removed from rootlet.

Description Shortly cylindrical, slightly swollen at middle, 2-4 cm long, 2 cm in diameter. Externally greyish-yellow to greyish-brown, with remains of rootlets and rootlets scars, and occasionally with remains of dark reddish-brown scale leaves. Both ends having residual lotus rhizomes, wrinkled and longitudinal-striated externally. Texture hard, fracture with numerous subrounded pores. Odour, slight; taste, slightly sweet and astringent.

Total ash Not more than 8.0 per cent (Appendix Ⅸ K).

Processing *Nodus Nelumbinis Rhizomatis* Eliminate foreign matter, wash clean and dry.

Nodus Nelumbinis Rhizomatis (carbonized) Stir-bake the clean *Nodus Nelumbinis Rhizomatis* as described under the method for carbonizing by stir-baking (Appendix Ⅱ D) until the surface is charred and the inner part becomes yellowish-brown.

Action To arrest bleeding and remove blood stasis.

Indications Hematemesis, hemoptysis, hematuria, abnormal uterine bleeding.

Usage and dosage 9-15 g.

Storage Preserve in a dry place, protected from moisture and moth.

Nux Prinsepiae (蔾仁, Ruiren)

Hedge Prinsepia Nut

Hedge Prinsepia Nut is the dried ripe kernel of *Prinsepia uniflora* Batal. or *Prinsepia uniflora* Batal var. *serrata* Rehd. (Fam. Rosaceae). The drug is collected in summer to autumn when the fruit is ripe, removed from sarcocarp, washed clean, and dried in the sun.

Description Subovoid, slightly flattened, 7-10 mm long, 6-8 mm wide, 3-5 mm thick. Externally pale yellowish-brown or dark brown, reticulated furrows distinct, sometimes with remains of brown sarcocarp; apex acute, slightly asymmetric on both sides. Texture hard. Seed flattened-ovoid, testa thin, pale brown or reddish-brown, easily stripped; cotyledons 2, milky-white, oily. Odour, slight; taste, slightly bitter.

Processing Eliminate foreign matter, wash clean, dry in the sun. Break to pieces before use.

Action To nourish the liver and improve eyesight, and dispel *wind-heat*.

Indications Conjuntivitis and blepharitis marginalis with impaired vision and photophobia.

Usage and dosage 5-9 g.

Storage Preserve in a dry place.

Omphalia
(雷丸, Leiwan)

Thunder Ball

Thunder Ball is the dried sclerotium of *Omphalia lapidescens* Schroet. (Fam. Polyporaceae). The drug is collected in autumn, washed clean, and dried in the sun.

Description Subspheroid or irregular masses, 1-3 cm in diameter. Externally blackish-brown or greyish-brown, with somewhat prominent and fine reticulate striations. Texture hard, uneasily broken; fracture uneven, white or pale greyish-yellow, powdery or granular, often with yellowish-brown marble-like striations. Odour, slight; taste, slightly bitter, with a sensation of granule and slightly viscose on chewing but without residue.
If the fracture shows brown and horny, it can not be used medicinally.

Identification (1) Powder: Pale grey. Hyphae sticked together, forming irregular masses, varying in size, colourless, a few yellowish-brown or brownish-red. Scattered hyphae short, with branches, about 4 μm in diameter. Prisms of calcium oxalate fine, up to about 8 μm in diameter, some gathered in groups. Abundant needle crystals observed after adding sulfuric acid.
(2) To a small quantity of blackish-brown hyphae scraped from the outer part add 1 drop of sodium hydroxide TS, a cherry-red colour is produced, which turns to yellow on acidifying with hydrochloric acid.

Processing Wash clean, dry in the sun and break into pieces. Do not boil or bake at a high temperature.

Action To kill parasites and promote digestion.

Indications Taeniasis, ancylostomiasis, ascariasis; intestinal parasitosis with abdominal pain or with infantile malnutrition.

Usage and dosage 15-21 g of powdered Omphalia, taken with boiled water after meals, 2-3 times daily on 3 consecutive days.

Storage Preserve in a cool and dry place.

Ophicalcitum
(花蕊石, Huaruishi)

Ophicalcite

Ophicalcite is a serpentine marble of metamorphic group. The drug is collected, removed from foreign matter.

Description Aggregates of granular and dense masses, irregular pieces, with sharpless angularities, white or pale greyish-white, intermingled with spotty or striped serpentine, pale green or pale yellow, commonly known as "Caiyun" (colourful stains). Star-like flashing observed against the light. Texture heavy and hard, uneasily broken. Odour, slight; taste, weak.

Processing *Ophicalcitcum* Wash clean. dry, pound to pieces.

Ophicalcitum (calcined) Calcine the clean Ophicalcitum as described under the method of calcining openly (Appendix Ⅱ D) to red thoroughly.

Action To remove *stagnation of blood* and arrest bleeding.

Indications Hemoptysis, hematemesis, traumatic bleeding and pain.

Usage and dosage 4.5-9 g, ground into powder for oral administration; appropriate quantity for external use.

Storage Preserve in a dry place.

Oviductus Ranae
(哈蟆油, Hamayou)

Forest Frog's Oviduct

Forest Frog's Oviduct is the dried oviduct of female *Rana temporaria chensinensis* David (Fam. Ranidae). The drug is collected and dried.

Description In irregular lump, crooked and overlapped, 1.5-2 cm long, 1.5-5 mm thick; the surface yellowish-white, with fatty lustre, occasionally with greyish-white thin membranous dry skin, with satiny greasy feeling. The volume can expand when soaked in lukewarm water. Odour, stinking; taste, slightly sweet and slimy on chewing.

Swelling capacity Break the drug into pieces of about 3 mm in diameter, dry at 80℃ for 4 hours. Weigh 0.2 g, carry out the method for determination of expansibility (Appendix Ⅸ O), shake once an hour in the first 6 hours, allow it to stand for 18 hours, decant the water, read out the expanded volume of the sample, and calculate.
The swelling capacity of the drug is not less than 55.

Action To replenish *kidney-essence*, nourish *yin*, and moisten the lung.

Indications Listlessness, palpitation, insomnia and night sweating in debilitated patients or in convalescence; hemoptysis in phthisis.

Usage and dosage 5-15 g, taken after soaked with water and stewed, or after made into pills.

Storage Preserve in a ventilated dry place, protected from moisture and moth.

Oötheca Mantidis
(桑螵蛸, Sangpiaoxiao)

Mantis Egg-Case

Mantis Egg-Case is the dried egg capsule of *Tenodera sinensis* Saussure, *Statilia maculata* (Thunberg) or *Hierodula patellifera* (Serville) (Fam. Mantidae), commonly known as "Tuanpiaoxiao", "Changpiaoxiao", and "Heipiaoxiao", respectively. The drug is collected from late autumn to next spring, removed from foreign matter, killed eggs by steaming, and dried.

Description *Tuanpiaoxiao* Somewhat cylindric or semi-spheroidal, consisting of many layers of thin overlapping membranous slices, 2.5-4 cm long, 2-3 cm wide. Externally pale yellowish-brown, the upper side with inconspicuous ribbon-like ridge, the bottom side even or

grooved. Texture light, lax and tenacious. The outer part of the transverse cut surface spongy, the inner part with numerous radially arranged cells each with a minute ellipsoidal egg, eggs dark brown, lustrous. Odour, slightly stinking; taste, weak or slightly salty.

Changpiaoxiao Somewhat slat-shaped, narrow at one end, 2.5-5 cm long, 1-1.5 cm wide. Externally greyish-yellow, the upper side with conspicuous ribbon-like ridge, each side of the ridge with one dark brown shallow groove and oblique striations. Texture hard and fragile.

Heipiaoxiao Somewhat tetragonal, 2-4 cm long, 1.5-2 cm wide. Externally greyish-brown, the upper side with conspicuous ribbon-like ridge, each side of the ridge with oblique striations, the caudal end slightly curved upward. Texture hard and tenacious.

Processing Eliminate foreign matter, steam thoroughly, dry. Cut into pieces before use.

Action To tonify the kidney, arrest spontaneous emission, arrest polyuria, and cure turbid urine.

Indications Nocturnal emission, spermatorrhea, enuresis, frequent urination, turbid discharge with urine.

Usage and dosage 5-9 g.

Storage Preserve in a ventilated dry place, protected from moth.

Pericarpium Arecae (大腹皮, Dafupi)

Areca Peel

Areca Peel is the dried pericarp of *Areca catechu* L. (Fam. Palmae). The drug is collected from winter to the next spring when the fruit is unripe, dried after boiled, cut longitudinally into two valves. The pericarp is peeled and known as "Dafupi". The ripe fruit is collected from late spring to early autumn when the fruit is ripe, dried after boiling. The pericarp is peeled, tapped to loosen, dried in the sun and known as "Dafumao".

Description *Dafupi* Somewhat elliptical or long-ovate gourd-shaped, 4-7 cm long, 2-3.5 cm wide, 0.2-0.5 thick. Epicarp deep brown to blackish, with irregular longitudinal wrinkles and raised transverse lines on the surface; style scars at apex and a fruit stalk and remains of calyx at the base. Endocarp dented, brown or deep brown, smooth and hard shell-shaped. Texture light and hard, mesocarp fibres visible torn longitudinally. Odour, slight; taste, slightly astringent.

Dafumao Somewhat elliptical or gourd-shaped. Epicarp mostly lost or remained. Mesocarp fibres yellowish-white or pale brown. Texture lax and soft. Endocarp hard shell-shaped, yellowish-brown or brown, inner surface smooth, sometimes broken in longitudinal. Odour, slight; taste, weak.

Identification Powder: Yellowish-white or yellowish-brown. Mesocarp fibres in bundles, fine and long, 8-15 μl in diameter, slightly lignified, pits visible; surrounding cells of fibre bundles containing silica body, cluster-shaped, about 8 μm in diameter. Endocarp cells irregular polygonal, subrounded or elliptical, 48-88 μm in diameter, and pits visible.

Water Carry out the determination of water (Appendix Ⅸ H, method 1); not more than 12.0 per cent.

Processing *Dafupi* Eliminate foreign matter, wash clean, cut into sections, and dry.

Dafumao Eliminate the foreign matter, wash clean and dry.

Action To check upward perverted flow of *qi*, relieve abdominal distension, and induce urination.

Indications Stagnation of *qi* due to accumulation of *damp* marked by epigastric and abdominal distension, difficult bowel movements, edema of the legs and oliguria.

Usage and dosage 4.5-9 g.

Storage Preserve in a dry place.

Pericarpium Citri Reticulatae (陈皮, Chenpi)

Dried Tangerine Peel

Dried Tangerine Peel is the dried pericarp of the ripe fruit of *Citrus reticulata* Blanco or its cultivars (Fam. Rutaceae). The drug is subdivided into

two classes, known respectively as "Chenpi", and "Guang Chenpi". The pericarp is peeled off when the fruit is ripe and dried in the sun or at a low temperature.

Description *Chenpi* often peeled in several lobes connecting at the base, or in irregular slices, 1-4 mm thick. Outer surface orange-red to reddish-brown, with fine wrinkles and sunken oil cavity spots; inner surface pale yellowish-white, rough, bearing yellowish-white or yellowish-brown vein-like vascular bundles. Texture slightly hard and fragile. Odour, aromatic; taste, pungent and bitter.

Guang Chenpi often in three lobes connected at the base, regular in shape and even in thickness, about 1 mm thick. The sunken oil cavity spots relatively large, transparent when observed against light. Texture slightly soft.

Identification (1) Powder: Yellowish-white to yellowish-brown. Parenchymatous cells of mesocarp numerous, cells irregular, with unevenly thickened walls, sometimes beaded. Epidermal cells of pericarp polygonal, subsquare or rectangular in surface view, anticlinal walls thickened, stomata subrounded, 18-26 μm in diameter, subsidiary cells indistinct; covered with cuticle in lateral view and the outer radial wall thickened. Numerous prisms of calcium oxalate containing in parenchymatous cells of the mesocarp, polygonal, rhombic or biconical, 3-34 μm in diameter, 5-53 μm long; sometimes two parallel polygonal crystals or 3-5 prisms occurring in one cell. Crystals of hesperidin mostly present in parenchymatous cells, yellow or colourless, in spheroid or amorphous masses, some crystals with radial striations. Spiral, pitted and reticulated vessels and tracheids small.

(2) To 0.3 g of the powder add 10 ml of methanol, heat under reflux for 20 minutes, filter. Condense 5 ml of the filtrate, to about 1 ml as the test solution. Dissolve hesperidin CRS in methanol to produce a saturated solution as the reference solution. Carry out the method for thin layer chromatography (Appendix Ⅵ B), using silica gel G containing 0.5% solution of sodium hydroxide as the coating substance and a mixture of ethyl acetate-methanol-water (100∶17∶13) as the mobile phase. Apply separately 2 μl each of the two solutions to the plate. After developing about 3 cm and removal of the plate, dry in air, and then use toluene-ethyl acetate-formic acid-water (20∶10∶1∶1) as the mobile phase, after developing 8 cm and removal of the plate, dry in air. Spray with a solution of aluminum chloride TS. The fluorescent spot in the chromatogram obtained with the test solution corresponds in position and colour to the spot in the chromatogram obtained with reference solution under ultraviolet light at 365 nm.

Water Carry out the method for the determination of water (Appendix Ⅳ H method 2), not more than 13.0 per cent.

Assay Carry out the method for high performance liquid chromatography (Appendix Ⅵ D).

Chromatographic system and system suitability Use octadecylsilane bonded silica gel as the stationary phase and a mixture of methanol-acetic acid-water (35∶4∶61) as the mobile phase. As detector a spectrophotometer set at 283 nm. The number of theoretic plates of the column is not less than 2000, calculated with the reference to the peak of hesperidin.

Reference solution Dissolve a quantity of hesperidin, accurately weighed, in methanol to produce a solution containing 0.4 mg per ml and mix well.

Test solution Weigh accurately 1 g of the coarse powder in a Soxhlet's extractor, add 80 ml of petroleum ether (boiling range 60-90℃), heat under reflux on a water bath for 2-3 hour. Discard the petroleum ether extract and evaporate the residue to dryness, add 80 ml of methanol, further heat under reflux until the extract solution is colourless, cool and filter. Transfer the filtrate to a 100 ml of a volumetric flask, wash the container with a small quantity of methanol for several times, filter the washings to the same flask, dilute with methanol to volume, and mix well.

Procedure Inject accurately 5 μl of each of the reference solution and the test solution, separately into the column, determine and calculate the content.

It contains not less than 3.5 per cent of hesperidin ($C_{28}H_{34}O_{15}$) with reference to the dried drug.

Processing Eliminate foreign matter, spray with water, soften thoroughly, cut into slivers, dry in the shade.

Action To regulate the flow of *qi*, invigorate the spleen function, eliminate *damp*, and resolve phlegm.

Indications Distension and fullness in the chest and epigastrium with anorexia, vomiting and diarrhea; cough with copious phlegm.

Usage and dosage 3-9 g.

Storage Preserve in a cool and dry place, protected from mould and moth.

Note: The main varieties include *Citrus reticulata* "Chachi" (Guang Chenpi), *Citrus reticulata* "Dahongpao", *Citrus reticulata* "Unshiu" and *Citrus reticulata* "Tangerina".

Pericarpium Citri Reticulatae Viride (青皮, Qingpi)

Green Tangerine Peel

Green Tangerine Peel is the dried pericarp of the young or immature fruits of *Citrus reticulata* Blanco and its cultivars (Fam. Rutaceae). The fallen young fruit is collected in May and June, dried in the sun and known commonly as "Geqingpi". The immature friut is collected in July and August, cut longitudinally into four-valved but connected at the base, removed from the emergence completely and dried in the sun, and known commonly as "Sihuaqingpi".

Description *Sihuaqingpi* Pericarp cut into four prolateel-liptic lobes, long-elliptical, 4-6 cm long, 0.1-0.2 cm thick. The outer surface greyish-green or blackish-green, with numerous oil cavities; the inner surface almost white or yellowish-white, rough, with yellowish-white or yellowish-brown veins. Texture, slightly hard, easily broken, fracture showing 1-2 layers of oil cavities at the outer part. Odour, aromatic; taste, bitter and pungent.

Geqingpi Subspheroidal, 0.5-2 cm in diameter. Externally greyish-green or blackish-green, slightly rough, with numerous fine and sunken oil cavities. Remains of style, slightly projecting at the apex, and a rounded scar of fruit stalk at the base. Texture, hard, fractured pericarp yellowish-white or pale yellowish-brown, 1-2 mm thick, with 1-2 layers of oil cavities at the outer part. Pulp vescles 8-10, pale brown. Odour, delicately aromatic; taste, sour, bitter and pungent.

Identification (1) *Sihuaqingpi* Powder: Greyish-green or pale greyish-brown. Parenchyma of mesocarp numerous, irregular, walls slightly thickened, some beaded, Epidermal cells of pericarp polygonal or subsquare in surface view, anticlinal walls thickened, stomata oblong, 20-28 μm

in diameter, subsidiary cells 5-7; covered with cuticle in lateral view, the outer radial walls slightly thickened. Prisms of calcium oxalate occurring in parenchymatous cells adjacent to the epidermis, polygonal, rhombic, or square, 8-28 μm in diameter, 24-32 μm long. Crystals of hesperidin brownish-yellow, hemispherical, subrounded or in irregular masses. Spiral and reticulated vessels small.

Geqingpi Epidermal cells of pulp vesicle narrowly prolate, walls thin, some slightly sinuous, containing prisms of calcium oxalate, also containing crystals of hesperidin.

(2) To 0.3 g of the powder add 10 ml of methanol, heat under reflux for 20 minutes, filter. Take 5 ml of the filtrate concentrated to about 1 ml, as the test solution and a saturated solution of hesperidin CRS in methanol as the reference solution. Carry out the method for thin layer chromatography (Appendix Ⅵ B), using silica gel G prepared with 0.5% sodium hydroxide solution as the coating substance and a mixture of ethyl acetate-methanol-water (100∶17∶13) as the mobile phase. Apply separately to the plate 2 μl of each of the two solutions. After developing for about 3 cm and removal of the plate, dry in air, and then using the upper layer of methylbenzene-ethyl acetate-methanoic acid-water (20∶10∶1∶1) as the mobile phase, after developing for about 8 cm and removal of the plate, dry in air, spray with aluminium chloride TS. Examine under ultraviolet light at 365 nm after the methanol evaporated. The fluorescent spot in the chromatogram obtained with the test solution is observed, corresponding in position and colour to the spot in the chromatogram obtained with the reference solution.

Assay Carry out the method for high performance liquid chromatography (Appendix Ⅵ D).

Chromatographic system and system suitability Use octadecylsilane bonded silica gel as the stationary phase and a mixture of methanol-water (25∶75) as the mobile phase. As detector a spectrophotometer set at 284 nm. The number of theoretical plates of the column is not less than 1000, calculated with the reference to the peak of hesperidin.

Reference solution Weigh accurately a quantity of hesperidin CRS, add methanol to prepare a solution containing 0.1 mg per ml.

Test solution Weigh accurately 0.2 g of the powder in a 50 ml volumetric flask, add 30 ml of methanol, ultrasonicate for 30 minutes, allow to cool, add methanol to the volume, mix well, filter, collect 2 ml of the successive filtrate in a 5 ml volumetric flask, add methanol to the volume, mix well.

Procedure Inject accurately 10 μl of each of the reference solution and the test solution respectively into the column, determine and calculate the content.

It contains not less than 5.0 per cent of hesperidin ($C_{28}H_{34}O_{15}$).

Processing *Pericarpium Citri Reticulatae Viride* Eliminate foreign matter, wash clean, soften thoroughly, cut into thick slices or slivers, dry in the sun.

Pericarpium Citri Reticulatae Viride (processed with vinegar) Stir-bake the slices or slivers of Pericarpium Citri Reticulatae Viride, as described under the method for stir-baking with vinegar (Appendix Ⅱ D), to slightly yellow, using 15 kg of vinegar per 100 kg of Pericarpium Citri Reticulatae Viride.

Action To soothe the liver, disintegrate stagnated *qi*, and remove retained food.

Indications Distending pain in the chest and costal regions; hernia; mass formation in the breast, mastitis; abdominal pain due to retention of undigested food.

Usage and dosage 3-9 g.

Storage Preserve in a cool and dry place.

Pericarpium Granati (石榴皮, Shiliupi)

Pomegranate Rind

Pomegranate Rind is the dried pericarp of *Punica granatum* L. (Fam. Punicaceae). The drug is collected in autumn when the fruit is ripe, and dried in the sun.

Description Irregularly slices or gourd-shaped, varying in size, 1.5-3 mm thick. The outer surface reddish-brown, brownish-yellow or dark brown, somewhat lustrous, rough, with numerous warty protuberances. Some with raised tubular persistent calyx and a stout and short fruit stalk or its scar. The inner surface yellow or reddish-brown, with raised reticulated remains of fruit stalk. Texture hard and fragile, fracture yellow, somewhat granular. Odour, slight; taste, bitter and astringent.

Identification (1) Transverse section: Exocarp cells 1 row, arranged relatively compact, covered with cuticle. Mesocarp slightly thick, parenchymatous cells containing starch granules and clusters or prisms of calcium oxalate; stone cells single, subrounded, rectangular or irregular, and rarely branched, walled thick. Endocarp cells relatively small, containing starch granules and crystals of calcium oxalate, and stone cells relatively small.

Powder: Reddish-brown. Stone cells subrounded, rectangular or irregular, rarely branched, 27-102 μm in diameter, thick-walled with fine and close pit canals and a large lumen, some containing brown contents. Epidermal cells subsquare or subrectangular, with slightly thickened walls. Clusters of calcium oxalate 10-25 μm in diameter, prisms infrequent. Spiral and reticulate vessels 12-18 μm in diameter. Starch granules subrounded, 2-10 μm in diameter.

(2) Heat 1 g of the powder in 10 ml of water on a water bath at 60℃ for 10 minutes and filter while hot. To 1 ml of the filtrate, add 1 drop of 1% solution of ferric chloride in ethanol; a dark green colour is produced immediately.

Foreign matter Not more than 6% (Appendix Ⅸ A).

Assay Weigh accurately about 0.4 g of the powder (through No. 3 sieve), carry out the method for determination of Tanninoids (Appendix Ⅹ B).

It contains not less than 10.0 per cent of tanninoids, calculated with reference to the dried drug.

Processing *Pericarpium Granati* Eliminate foreign matter, wash clean, cut into pieces, and dry.

Pericarpium Granati (carbonized) Stir-bake the pieces of Pericarpium Granati as described under the method for carbonizing by stir-baking (Appendix Ⅱ D) until the outer surface is charred and the inner surface turns brown.

Action To check diarrhea, bleeding and expel intestinal parasites.

Indications Protracted diarrhea, chronic dysentery; hematochezia, prolapse of the rectum; abnormal uterine bleeding, leukorrhalgia; intestinal parasitosis with abdominal pain.

Usage and dosage 3-9 g.

Storage Preserve in a cool and dry place.

Pericarpium Papaveris (罂粟壳, Yingsuqiao)

Poppy Capsule

Poppy Capsule is the dried pericarp of ripe fruit of *Papaver somniferum* L. (Fam. Papaveraceae). The drug is collected in autumn when the fruit is ripe and juiceremoved, broken, removed from seeds, branches, and dried.

Description Ellipsoidal or bottle-like ovoid, mostly broken to pieces, 1.5-5 cm in diameter, 3-7 cm long. Outer surface yellowish-white, pale brown to pale purple, smooth, somewhat lustrous, with longitudinal or transverse cutting scars. At the apex bearing 6-14 remains of stigmate, arranged radially, dish-shaped, and a short stalk at the base. Inner surface pale yellow, somewhat lustrous, with longitudinally arranged brownish-yellow false septa, bearing numerous slightly prominent and brown dots. Texture light and fragile. Odour, slightly aromatic; taste, slightly bitter.

Identification (1) Powder: Yellowish-white. The outer epidermal cells of pericarp subpolygonal or subsquare in surface view, 20-50 μm in diameter, walls thickened, some lumina containing pale yellow contents. The inner epidermal cells of pericarp elongated polygonal, rectangular or linear in surface view, 20-65 μm in diameter, 25-230 μm long, anticlinal walls thickened, pits and pit canals distinct, sometimes striations visible. Parenchymatous cells of pericarp subrounded or oblong, walls slightly thickened. Vessels mostly reticulated or spiral, 10-70 μm in diameter. Phloem fibres elongated fusiform, 20-30 μm in diameter, walls slightly thickened, oblique pits distinct, some pits crossed, V-shaped or crisscross-shaped. Laticiferous tubes linear, walls thickened, containing pale yellow contents.
(2) To 1 g of the powder add 10 ml of ethanol, macerate by warming for 30 minutes, filter. Transfer 0.5 ml of the filtrate to a 25 ml volumetric flask, dilute to volume with ethanol. Carry out the method for ultraviolet spectrophotometry and colourimetry (Appendix Ⅴ A), the light absorption exhibits a maximum at 283 nm.
(3) To 2 g of the powder add 20 ml of methanol, heat under reflux for 30 minutes, filter while hot, evaporate the filtrate to dryness. Dissolve the residue in 1 ml of methanol as the test solution. Dissolve morphine CRS, codeine phosphate CRS and papaverine hydrochloride CRS in methanol to produce a mixed solution containing 1 mg of each per ml as the reference solution. Carry out the method for thin layer chromatography (Appendix Ⅵ B), using silica gel G mixed with 2% sodium hydroxide solution as the coating substance and a mixture of toluene-acetone-ethanol-strong ammonia TS (20:20:3:1) as the mobile phase. Apply separately to the plate 2-4 μl each of the two solutions. After developing and removal of the plate, dry in air, examine under ultraviolet light at 365 nm. The fluorescent spots in the chromatogram obtained with the test solution correspond in position and colour to the spots in the chromatogram obtained with the reference solution. Then spray with dilute potassium iodobismuthate TS and ethanolic sodium nitrite TS successively. The spots in the chromatogram obtained with the test solution correspond in position and colour to the spots in the chromatogram obtained with the reference solution.

Foreign matter Not more than 2 per cent (Appendix Ⅸ A).

Water Not more than 12.0 per cent (Appendix Ⅸ H, method 1).

Acid-insoluble ash Not more than 1.5 per cent (Appendix Ⅸ K).

Extractives Carry out the hot extraction method for determination of ethanol-soluble extractives (Appendix Ⅹ A), not less than 13.0 per cent, using a 20% of ethanol as the solvent.

Assay Carry out the method for high performance liquid chromatography (Appendix Ⅵ D).

Chromatographic system and system suitability Use octylsilane bonded silica gel as the stationary phase and a mixture of acetonitrile, 0.01 mol/L dipotassium hydrogen phosphate and 0.05 mol/L heptane sodium sulfonate (20:40:40) as the mobile phase. As detector a spectrophotometer set at 220 nm. The number of theoretical plates of the column is not less than 1000, calculated with the reference to the peak of morphine.

Reference solution Weigh accurately a quantity of morphine CRS, previously dried to constant weight at 105℃, in a brown volumetric flask, add 20% methanol of 5% acetic acid to prepare a reference solution containing 24 μg of morphine per ml.

Test solution Weigh accurately 0.5 g of powder (pass through No. 3 sieve) in a 50 ml volumetric flask, add accurately 20 ml of 20% methanol of 5% acetic acid, stopper tightly, weigh, ultrasonicate for 30 minutes, take out and allow to cool, weigh again and replenish the loss of the solvent with 20% methanol of 5% acetic acid, mix well and stand, filter through millipore membrane (0.45 μm), collect the successive filtrate as the test solution.

Procedure Inject accurately 10 μl of each of the reference solution and the test solution respectively into the column, determine and calculate the content.
It contains 0.06-0.40 per cent of morphine calculated with reference to the dried drug.

Processing *Pericarpium Papaveris* Eliminate foreign matter, break to pieces, wash clean, soft thoroughly, and cut into slivers.

Pericarpium Papaveris (*stir-baked with vinegar*) Stir-bake the clean slivers of Pericarpium papaveris as described under the method for stir-baking with vinegar (Appendix Ⅱ D) to dryness.

Pericarpium Papaveris (*stir-baked with honey*) Stir-bake the clean slivers of Pericarpium Papaveris as described under the method for stir-baking with honey (Appendix Ⅱ D) to unsticky after cooling.

Action To relieve cough, arrest diarrhea, and alleviate pain.

Indications Chronic cough; chronic diarrhea with prolapse of the rectum; epigastric and abdominal pain.

Usage and dosage 3-6 g.

Precaution Long-term administration is prohibited for addiction. Contraindicated for children.

Storage Preserve in a dry place, protected from moth.

Pericarpium Trichosanthis (瓜蒌皮, Gualoupi)

Snakegourd Peel

Snakegourd Peel is the dried pericarp of ripe fruit of

Trichosanthes kirilowii Maxim. or *Trichosanthes rosthornii* Harms (Fam. Cucurbitaceae). The drug is collected in autumn when the fruit is ripe, cut, removed from sarcocarp and seed, and dried in the shade.

Description Two to several valves with involute edge, 6-12 cm long. The outer surface orange-red or orange-yellow, shrunken, sometimes with remains of fruit stalk; the inner surface yellowish-white. Texture relatively fragile, easily broken. Odour, caramel like; taste, weak, slightly sour.

Identification Dry the drug at 60℃, pulverize. To about 2 g of the coarse powder add 20 ml of ethanol, ultrasonicate for 15 minutes, filter, evaporate the filtrate to dryness, add 2 ml of methanol to dissolve the residue, and use as the test solution. Prepare a solution of 2 g of Pericarpium Trichosanthis reference drug in the same manner as the reference drug solution. Carry out the method for thin layer chromatography (Appendix Ⅵ B), using silica gel G as the coating substance and a mixture of petroleum ether (60-90℃)-ethyl acetate (4∶1) as the mobile phase. Apply separately to the plate 5 μl of each of the two solutions. After developing and removal of the plate, dry in air, spray with a 5% solution of vanillin in sulfuric acid and heat with hot wind to the spots distinct. The spots in the chromatogram obtained with the test solution correspond in position and colour to the spots in the chromatogram obtained with the reference drug solution.

Processing Wash clean, dry for a moment, cut into slivers, and dry in the sun.

Action To remove *heat* and resolve *phlegm*, and promote the flow of *qi* in the chest.

Indications Cough with yellowish sticky expectoration, oppressed feeling in the chest and costal pain.

Usage and dosage 6-9 g.

Precaution Incompatible with Radix Aconiti and homologous drugs.

Storage Preserve in a cool and dry place, protected from mould and moth.

Pericarpium Zanthoxyli (花椒, Huajiao)

Pricklyash Peel

Pricklyash Peel is the dried pericarp of ripe fruit of *Zanthoxylum schinifolium* Sieb. et Zucc. or *Zanthoxylum bungeanum* Maxim. (Fam. Rutaceae). The drug is collected in autumn when ripe, dried in the sun, removed from seed and foreign matter.

Description *Pericarp of Zanthoxylum Schinifolium* Mostly 2-3 small follicles, apocarpous at the upper part, grouped on a fruit stalk; follicles spherical, spliting along the ventral suture, 3-4 mm in diameter. Outer surface greyish-green or dark green, scattered with numerous oil dots and fine reticulated and raised wrinkles; inner surface almost white, smooth. Endocarp commonly separated from exocarp at the base. Remains of seed ovoid, 3-4 mm long, 2-3 mm in diameter, externally black, lustrous. Odour, aromatic; taste, slightly sweet and pungent.

Pericarp of Zanthoxylum Bungeanum Most follicles singly, 4-5 mm in diameter, outer surface purplish-red or brownish-red, scattered with numerous warty oil dots, 0.5-1 mm in diameter, translucent when observed against light; inner surface yellowish. odour, strongly aromatic; taste, lastingly pungent and numb.

Identification To 2 g of the coarse powder add 10 ml of ether, shake well, macerate over night, filter, evaporate the filtrate to about 1 ml as the test solution. Prepare a solution of 2 g of Pericarpium Zanthoxyli reference drug in the same manner as the reference drug solution. Carry out the method for thin layer chromatography (Appendix Ⅵ B), using silica gel G as the coating substance and a mixture of *n*-hexane-ethyl acetate (4∶1) as the mobile phase. Apply separately to the plate 5 μl of each of the two solutions. After developing and removal of the plate, dry in air. Examine under ultraviolet light at 365 nm, the red fluorescent spot in the chromatogram obtained with the test solution corresponds in position and colour to the spot in the chromatogram obtained with the reference drug solution.

Assay Carry out the method for determination of volatile oil (Appendix Ⅹ D), not less than 1.5 per cent of volatile oil (ml/g).

Processing *Pericarpium Zanthoxyli* Remove seeds, fruit stalks and other foreign matter.

Pericarpium Zanthoxyli (*stir-baked*) Stir-bake the clean Pericarpium Zanthoxyli as described under the method for simple stir-baking (Appendix Ⅱ D) to scented.

Action To warm the spleen and the stomach and relieve pain, kill parasites, and relieve itching.

Indications Epigastric pain with cold sensation, vomiting and diarrhea; abdominal pain due to intestinal parasitosis; ascariasis. External use for itching in eczema.

Usage and dosage 3-6 g; for external use, appropriate quantity is decocted for washing.

Storage Preserve in a ventilated and dry place.

Periostracum Cicadae (蝉蜕, Chantui)

Cicada Slough

Cicada Slough is the slough of the nymph of *Cryptotympana pustulata* Fabricius (Fam. Cicadidae) during emergence. The drug is collected in summer or autumn, removed from mud and sand, dried in the sun.

Description Slightly ellipsoidal and curved, about 3.5 cm long, 2 cm wide. Externally yellowish-brown, translucent, lustrous. The head with a pair of filiform antennae, usually dropped, compound eyes projected. The anterior end of the frons projected, mouth and snout developed, labrum short and wide, labium extended into a tube. The dorsal surface of the thorax crisscross split, margins curved inward. Each side of the dorsum bearing two small wings. The ventral surface bearing three pairs of legs, covered with yellowish-brown minute hairs. The abdomen obtuse rounded, 9 segments. Texture light, hollowed, fragile. Odour, slight; taste, slight.

Processing Eliminate foreign matter, wash clean and dry in the sun.

Action To dispel *wind-heat*, ease sore throat, promote eruptions, remove nebula, and arrest spasm.

Indications Common cold due to *wind-heat* sore throat, hoarseness; measles with inadequate eruptions; urticaria

with itching; inflammation of the eyes with nebula; convulsion, tetanus.

Usage and dosage 3-6 g.

Storage Preserve in a dry place, protected from pressure.

Periostracum Serpentis (蛇蜕, Shetui)

Snake Slough

Snake Slough is the dried epidermal membrane of *Elaphe taeniura* Cope, *Elaphe carinata* (Guenther) or *Zaocys dhumnades* (Cantor) (Fam. Colubridae). The drug is collected from the end of spring to early summer or the beginning of winter, removed from soil and sand, dried.

Description Cylindrical, usually flattened and shrunken, snake-shaped while intact, over 1 m in length. Dorsal surface silvery-grey or light greyish-brown, lustrous, scale marks rhombic or elliptic, joins between the scale marks white, somewhat wrinkled or concave. Ventral surface milky-white or slightly yellow, scale marks rectangular, imbricate. Light, texture slightly flexible, lubricant and elastic on touching, with a rustling sound when gently rubbed with hand. Odour, slightly stinking; taste, weak or slightly salty.

Acid-insoluble ash Not more than 3.0 per cent (Appendix Ⅸ K).

Processing *Periostracum Serpentis* Eliminate foreign matter, cut into sections.

Periostracum Serpentis (*processed with wine*) Stir-bake the sections of Periostracum Serpentis, as described under the method for stir-baking with wine (Appendix Ⅱ D) to dry, using 15 kg of yellow rice wine per 100 kg of Periostracum Serpentis.

Action To arrest convulsion, counteract *toxicity*, and remove nebula.

Indications Infantile convulsion; nebula; inflammation of the throat, boils; cutaneous itching.

Usage and dosage 2-3 g; or 0.3-0.6 g, ground into powder for oral administration.

Storage Preserve in a dry place, protected from moth.

Petiolus Trachycarpi (棕榈, Zonglu)

Fortune Windmillpalm Petiole

Fortune Windmillpalm Petiole is the dried petiole of *Trachycarpus fortunei* (Hook. f.) H. Wendl. (Fam. Palmae). The drug is collected from the old decurrent petiole and sheath, removed from palm fibre, and dried in the sun.

Description Long plate-shaped, one end narrow and thick, another one broad and thin, varying in size. Externally reddish-brown, rough, with longitudinal wrinkles; prominent fibres distinct on one surface, both sides of fibres bearing numerous brown hairs. Texture hard and pliable, uneasily broken, fracture fibrous. Odour, slight; taste, weak.

Identification To 1 g of the powder add 20 ml of water, heat for 5 minutes, filter, dilute the filtrate to 20 ml with water. To 1 ml of the filtrate add 2-3 drops of ferric chloride TS, a dirty green flocculent precipitate is produced. To another 1 ml of the filtrate add 3 drops of sodium chloride in gelatin TS, a white turbidity is produced.

Processing *Petiolus Trachycarpi* Eliminate foreign matter, wash clean, and dry.

Petiolus Trachycarpi (*carbonized*) Carbonize the clean Petiolus Trachycarpi as described under the method for carbonizing by calcining (Appendix Ⅱ D).

Action To arrest bleeding.

Indications Spitting of blood, epistaxis, hematuria, hematochezia, abnormal uterine bleeding.

Usage and dosage 3-9 g, commonly used after processed.

Storage Preserve in a dry place.

Pheretima (地龙, Dilong)

Earthworm

Earthworm is the dried body of *Pheretima aspergillum* (E. Perrier), *Pheretima vulgaris* Chen, *Pheretima guillelmi* (Michaelsen) or *Pheretima pectinifera* Michaelsen (Fam. Megascolecidae). The former is known as "Guang Dilong", the latter three are known as "Hu Dilong". Guang Dilong is collected from spring to autumn, Hu Dilong is collected in summer, the abdomen is cut open immediately after captured, removed from the viscera and soil, washed clean, dried in the sun or at a low temperature.

Description *Guang Dilong* In slat-shaped thin slices, curved, margin somewhat rolled, 15-20 cm long, 1-2 cm wide, with segments throughout the body. The outer surface brown to purplish-grey on the dorsal part, pale yellowish-brown on the abdomen part; the clitellum at the 14-16th segments, relatively bright, commonly known as "Baijing" (white neck). Tapered at the anterior part, blunt and rounded at the caudal end. The setae coarse and stiff, slightly light in colour. Male opening on a small protuberance of setae ring at the ventral side of segment 18, outer margin with several rings of shallow skin fold, inner setae ring raised, 1 or 2 ranks of small papillae on both sides of the anterior part, each side 10-20, varying in number. Two pairs of seminal receptacle openings located on an elliptical protuberance between segment 7/8-8/9, occupying about 5/11 girth of the segment. Texture light and leathery, uneasily broken. Odour, stinking; taste, slightly salty.

Hu Dilong 8-15 cm long, 0.5-1.5 cm wide, the whole body consisting of segments, dorsal part brown to yellowish-brown, ventral part light yellowish-brown; 3 pairs of seminal receptacle openings located between 6/7-8/9 segment. The clitellum at segments 14-16, bright. A pair of male openings on segment 18. The male copulatory cavity of *Pheretima vulgaris* can turn out completely, in the shape of cauliflower or penis; that of *Pheretima guillelmi* longitudinal opened slit-like; 1 or many papillae the male openings of *Pheretima pectinifera* with 1 or more papillae at the inner side.

Identification (1) Powder: Pale grey or greyish-yellow. Obliquely striated muscle fibres colourless or pale brown, muscle fibres scattered or twisted each other into flaky, mostly curved slightly, 4-26 μm in diameter, margin usually uneven. Epidermal cells brownish-yellow, cell boundary indistinct, containing dark brown pigment granules. Setae rarely visible, usually broken and scattered, pale brown or yellowish-brown, 24-32 μm in diameter, tip mostly blunt, some with longitudinal slits.
(2) To 1 g of the powder add 10 ml of water, heat to boil, cool, centrifuge and use the supernatant as the test solution. Dissolve lysine CRS, leucine CRS and valine CRS in water separately to produce three solutions each containing 1 mg, 1 mg and 0.5 mg per ml as the reference solutions. Carry out the method for thin layer chromatography (Appendix Ⅵ B), using silica gel G as the coating substance and a mixture of *n*-butanol, glacial acetic acid and water (4∶1∶1) as the mobile phase. Apply 3 μl of the above four solutions to the plate. After developing and removal of the plate, dry in air. Spray with ninhydrin TS and heat at 105℃ to spots clear. The spots in the chromatogram obtained with the test solution correspond in position and colour to the spots in the chromatogram obtained with the reference solutions.
(3) To 1 g of the power add 20 ml of chloroform, ultrasonicate for 20 minutes, filter, and evaporate the filtrate to dryness on a water bath. Dissolve the residue in 1 ml of chloroform as the test solution. Prepare a solution of 1 g of Pheretima reference drug in the same manner as the reference drug solution. Carry out the method for thin layer chromatography (Appendix Ⅵ B), using silica gel G as the coating substance and a mixture of toluene and water (9∶1) as the mobile phase. Apply separately to the plate 5 μl of each of the above two solutions. After developing and removal of the plate, dry in air. Examine under ultraviolet light at 365 nm. The fluorescent spots in the chromatogram obtained with the test solution correspond in position and colour to the spots in the chromatogram obtained with the reference drug solution.

Foreign matter Not more than 6 per cent (Appendix Ⅸ A).

Water Carry out the method for determination of water (Appendix Ⅸ H, method 1), not more than 12.0 per cent.

Total ash Not more than 10.0 per cent (Appendix Ⅸ K).

Acid-insoluble ash Not more than 5.0 per cent (Appendix Ⅸ K).

Heavy metals Carry out the limit test for heavy metals (Appendix Ⅸ E, method 2), using 1g, not more than 30 ppm.

Extractives Carry out the method for determination of water-soluble extractives (Appendix Ⅹ A, the hot extraction method), not less than 16.0 per cent.

Processing Eliminate foreign matter, wash clean, cut into sections and dry.

Action To clear *heat*, arrest convulsion, remove obstruction from the collaterals, relieve asthma, and cause urination.

Indications High fever with impaired consciousness, convulsion; arthralgia, numbness of limbs, hemiplegia; cough and asthma due to *heat* in the lung; edema and oliguria; hypertension.

Usage and dosage 4.5-9 g.

Storage Preserve in a ventilated dry place, protected from mould and moth.

Placenta Hominis (紫河车, Ziheche)

Human Placenta

Human Placenta is the dried placenta of a healthy woman. The fresh placenta is removed from amnion and umbilical cord, washed repeatedly until free from blood, steamed or boiled in water for a moment, and dried.

Description Rounded or dish-shaped ellipsoidal, 9-15 cm in diameter, varying in thickness, yellow or yellowish-brown; one side uneven, with irregular stripes; the other side relatively smooth, often with remnant of the umbilical cord; fine blood vessels scattered around. Texture hard and fragile. Odour, stinking.

Processing Eliminate dust and scraps, break to pieces or grind to fine powder.

Action To warm the kidney, replenish vital essence, *qi* and blood.

Indications Emaciation, tidal fever, night sweating, cough, dyspuea and anorexia in consumptive diseases; impotence, seminal emission; infertility; lack of lactation.

Usage and dosage 2-3 g, ground into powder for oral administration.

Storage Preserve in a dry place, protected from moth.

Plumula Nelumbinis (莲子心, Lianzixin)

Lotus Plumule

Lotus Plumule is the dried young cotyledon and radicle of the ripe seed of *Nelumbo nucifera* Gaertn. (Fam. Nymphaeaceae). The drug is taken out of the seed and dried in the sun.

Description Fine-cylindrical, 1-1.4 cm long, about 0.2 cm in diameter. The young cotyledons green, one long and the other one short, curved to arrow-shaped, apex folded downwards, a fine plumule visible between the two cotyledons. Radicle cylindrical, about 3 mm long, yellowish-white. Texture fragile, easily broken, fracture showing several small pits. Odour, slight; taste, bitter.

Identification (1) Powder: Greyish-green. Epidermal cells subrectangular, radially prolonged, thin-walled. Mesophyll cells subrounded, thin-walled, containing numerous starch granules and green pigments. Radicle cells rectangular, arranged tidily, walls extremely thin, and some cells containing fatty oil droplets. The tissue of young buds showing relatively large cell spaces.
(2) To 2 g of the powder add 30 ml of methanol, ultrasonicated for 30 minutes, filter, evaporate the filtrate to dryness, add 1 ml of methanol to dissolve the residue as the test solution. Dissolve liensinine perchlorate CRS in methanol to produce a solution containing 1 mg per ml as the reference solution. Carry out the methanol for thin layer chromatography (Appendix Ⅵ B), using a silica gel G and a mixture of chloroform, ethyl acetate and diethylamine (5∶4∶1) as the mobile phase. Apply separately to plate 4 μl of each of the two solutions. After developing and removal of

the plate, dry in air, spray with dilute potassium iodobismuthate TS. The spot in the chromatogram obtained with the test solution corresponds in position and colour to the spot in the chromatogram obtained with the reference solution.

Water Carry out the method for the determination of water (Appendix Ⅸ H, method 1), not more than 12.0 per cent.

Total ash Not more than 5.0 per cent (Appendix Ⅸ K).

Assay Carry out the method for high performance liquid chromatography (Appendix Ⅵ D).

Chromatographic system and system suitability Use octadecylsilane bonded silica gel as the stationary phase and a mixture of acetonitrile, 0.015 mol/L of dodecyl sodium sulfonate (dissolve 0.41 g of dodecyl sodium sulfonate in 100 ml water) and glacial acetic acid (56∶43∶1) as the mobile phase. As detector a spectrophotometer set at 282 nm. The number of theoretical plates of the column is not less than 5000, calculated with the reference to the peak of limensinine.

Reference solution Weigh accurately a quantity of liensinine perchlorate CRS, add methanol to prepare a solution containing 25 μg per ml. (weight of liensinine=weight of liensinine perchlorate/1.3587).

Test solution Weigh accurately about 0.5 g of the powder (pass through No. 4 sieve) in a flask, add accurately 25 ml of 2% hydrochloric acid of methanol, weigh, heat under reflux for 30 minutes, allow to cool, weigh again and replenish the loss of the solvent with 2% hydrochloric acid of methanol, filter, collect accurately the successive filtrate 5 ml in a 10 ml volumetric flask, add mobile phase to volume, mix well as the test solution.

Procedure Inject accurately 10 μl of each of the reference solution and test solution respectively into the column, determine and calculate the content.
It contains not less than 0.20 per cent of liensinine ($C_{37}H_{42}N_2O_6$), calculated with reference to the dried drug.

Action To remove *heat* from the heart and anchor the mind, restore the coordination between the heart and the kidney, check seminal emission, and arrest bleeding.

Indications Impaired consciousness and delirium due to invasion of the pericardium by heat; insomnia and seminal emission due to breakdown of the coordination between the heart and the kidney; hemoptysis due to *heat* in blood.

Usage and dosage 2-5 g.

Storage Preserve in a ventilated dry place, protected from mould and moth.

Pollen Pini (松花粉, Songhuafen)

Pine Pollen

Pine Pollen is the dried pollen of *Pinus massoniana* Lamb., *Pinus tabulaeformis* Carr. or several other plants of the same genus (Fam. Pinaceae). The drug is collected at early stage of flowering in spring, dried in the sun, and removed from foreign matter.

Description Fine powder yellowish. Texture light, easily flying up, with lubricant feeling when twisted. Odour, slight; taste, weak.

Identification Powder: Pollen grains elliptical, 45-55 μm long, 29-40 μm in diameter, surface smooth, bearing an inflated air sac on both sides, the walls of air sacs with distinct reticulate striations, the meshes polygonal.

Water Not more than 13.0 per cent (Appendix Ⅸ H, method 1).

Total ash Not more than 8.0 per cent (Appendix Ⅸ K).

Action To remove dampness and stop bleeding.

Indications Eczema, impetigo, erosion of the skin with exudation, traumatic bleeding, diaper dermatitis.

Usage and dosage Appropriate quantity is spread over the lesion.

Storage Preserve in a dry place, protected from moisture.

Pollen Typhae (蒲黄, Puhuang)

Cattail Pollen

Cattail Pollen is the dried pollen of *Typha angustifolia* L., *Typha orientalis* Presl or other plants of the same genus (Fam. Typhaceae). Yellow male inflorescence is gathered in summer, dried in the sun and ground. The drug is collected by sifting.

Description Yellow powder. Texture light, capable of floating on water, with satiny feeling when twisted and easily adsorbed on fingers. Odour, slight; taste, weak.

Identification (1) Powder: Yellow. Pollen grains subrounded or elliptical, 17-29μm in diameter, exine with reticulate sculptures, with convex wavy or gear shape contour line, single pore indistinct.
(2) To 2 g of the powder add 30 ml of 80% ethanol, heat under reflux for 1 hour, filter and evaporate the filtrate to dryness. Dissolve the residue in 10 ml of ethyl acetate by heating, filter, concentrate the filtrate to about 2 ml as the test solution. Dissolve isorhamnetin CRS in ethyl acetate to produce a solution of 1 mg per ml as the reference solution. Carry out the method for thin layer chromatography (Appendix Ⅵ B), using silica gel GF_{254} as the coating substance and a mixture of toluene, ethyl acetate and formic acid (5∶2∶1) as the mobile phase. Apply separately to the plate 10-15 μl of the test solution and 5 μl of the reference solution. After developing and removal of the plate, dry in air, and examine under ultraviolet light at 254 nm. The spot in the chromatogram obtained with the test solution corresponds in position and colour to the spot obtained with the reference solution.
(3) To 2 g of the powder add 50 ml of 80% ethanol, macerate for 24 hours, filter and evaporate the filtrate to dryness. Dissolve the residue in 5 ml of water, filter. Extract the filtrate with two 5-ml quantity of butanol saturated with water. Combine the extracts and evaporate to dryness. Dissolve the residue in 2 ml of ethanol as the test solution. Dissolve isorhamnetin-3-*O*-neohesperidoside CRS and typhaneoside CRS in ethanol to produce solutions containing 1 mg of each per ml as the reference solutions. Carry out the method for thin layer chromatography (Appendix Ⅵ B), using silica gel GF_{254} as the coating substance and a mixture of ethyl acetate, butanone, formic acid and water (5∶3∶1∶1) as the mobile phase. Apply separately to the plate 5-10 μl of the test solution and 5 μl of each of the reference solutions. After developing and removal of the plate, dry in air, and examine under ultra-

violet light at 254 nm. The spots in the chromatogram obtained with the test solution correspond in position and colour to the spots obtained with the reference solution.

Foreign matter Not more than 10 per cent (Appendix Ⅸ A).

Water Not more than 13.0 per cent (Appendix Ⅸ H, method 1).

Extractives Carry out the hot extraction method for determination of ethanol-soluble extractives (Appendix Ⅹ A), using ethanol as the solvent, not less than 15.0 per cent.

Assay Carry out the method for high performance liquid chromatography (Appendix Ⅵ D)

Chromatographic system and system suitability Use octadecylsilane bonded silica gel as the stationary phase and a mixture of acetonitrile and water (15∶85) as the mobile phase. As detector a spectrophotometer set at 254 nm. The number of theoretical plates of the column is not less than 1000, calculated with reference to the peak of isorhamnetin-3-o-neohesperidoside.

Reference solution Dissolve a quantity of isorhamnetin-3-o-neohesperidoside CRS, accurately weighed, in methanol to produce a solution of 50 μg per ml.

Test solution To 0.5 g of the drug, accurately weighed, in a 50 ml volumetric flask, add 45 ml of methanol, ultrasonicate (power 250 W, frequency 20 kHz) for 30 minutes, cool, add methanol to volume, shake thoroughly. Filter and use the successive filtrate as the test solution.

Procedure Inject respectively 10 μl of the reference solution and 20 μl of the test solution, accurately measured, into the column, determine and calculate the content.
It contains not less than 0.10 per cent of isorhamnetin-3-o-neohesperidoside ($C_{28}H_{32}O_{16}$), calculated with reference to the dried drug.

Processing *Pollen Typhae (unprocessed)* Pulverize and sift.

Pollen Typhae (carbonized) Stir-bake the clean Pollen Typhae as described under the method for carbonizing by stir-baking (Appendix Ⅱ D) until it becomes brown in colour.

Action To arrest bleeding, remove blood stasis, and relieve stranguria.

Indications Hematemesis, epistaxis, hemoptysis, abnormal uterine bleeding, traumatic bleeding; amenorrhea, dysmenorrhea, pricking pain in the epigastrium, traumatic swelling and pain; blood stranguria with pain.

Usage and dosage 5-9 g, decocted with wrapping; for external use, appropriate quantity is applied topically.

Precaution Used with caution in pregnancy.

Storage Preserve in a ventilated and dry place, protected from moisture and moth.

Polyporus
(猪苓, Zhuling)

Chuling

Chuling is the dried sclerotium of *Polyporus umbellatus* (Pers.) Fires (Fam. Polyporaceae). The drug is collected in spring and autumn, removed from soil, and dried.

Description Strip-shaped, subrounded or compressed-lumped, sometimes branched, 5-25 cm long, 2-6 cm in diameter. Externally black, greyish-black or brownish-black, crumpled or warty. Light. Texture, hard, fracture whitish or yellowish-white, somewhat granular. Odour, slight; taste, weak.

Identification (1) Section: All consisting of densely interweaved hyphae. The outer layer 27-54 μm thick, hyphae brown, uneasily separated; the inner hyphae colourless, sinuous, 2-10 μm in diameter, sometimes septa visible, with branches or tubercular swellings. Numerous prisms of calcium oxalate among the hyphae, mostly in octahedron cubes, regular double-conical octahedrons or irregular polyhedrons, 3-60 μm in diameter, up to 68 μm long, sometimes with several crystals aggregated.
(2) Boil 1 g of the powder with 10 ml of dilute hydrochloric acid on a water bath for 15 minutes, and stir; a viscose is produced. To a small quantity of powder, add a quantity of sodium hydroxide solution (1∶5) and stir; a suspension is produced.

Total ash Not more than 12.0 per cent (Appendix Ⅸ K).

Processing Eliminate foreign matter, soak in water, wash clean, soften thoroughly, cut into thick slices, and dry.

Action To induce urination and remove *damp*.

Indications Oliguria, edema, diarrhea, dysuria, leukorrhalgia.

Usage and dosage 6-12 g.

Storage Preserve in a ventilated and dry place.

Poria
(茯苓, Fuling)

Indian Bread

Indian Bread is the dried sclerotium of the fungus, *Poria cocos* (Schw.) Wolf (Fam. Polyporaceae). The drug is collected mostly in July to September, removed from soil, piled up, spread, and air-dried on the surface. Repeat this operation for several times until wrinkles appears and the inside water evaporated, then dried in the shade. It is known as "Fulingge". Or the fresh sclerotium is cut and dried in the air. According to the cut portions, and known as "Fulingpi" and "Fulingkuai", respectively.

Description *Fulingge* Subglobose, ellipsoid, oblate or irregular-shaped, variable in size. The outer skin thin and rough, brown to blackish-brown, conspicuously shrivelled and striated. Texture hard and compact, fracture granular, some cracked, the outer layer pale brown, inner part white, rarely reddish, some showing the penetrating roots of pine in the centre. Odour, slight; taste, weak and sticky when chewed.

Fulingpi (pared skin of Poria) Variable in form and size. Externally brown to blackish-brown, internally white or pale brown. Relatively loose and soft, slightly elastic.

Fulingkuai (peeled and sliced Poria) Occurring in pieces or slices, variable in size. White, pale red or pale brown.

Identification (1) Powder: Greyish-white. Irregularly granular masses and branched masses colourless, dissolved gradually on mounting in chloral hydrate solution. Hyphae colourless or pale brown, slender, slightly curved,

branched, 3-8 μm (rarely up to 16 μm) in diameter.
(2) Heat under reflux 1 g of the powder in 10 ml of acetone for 10 minutes, filter. Evaporate the filtrate to dryness, dissolve the residue in 1 ml of glacial acetic acid, add 1 drop of sulfuric acid; a pale red colour is produced, which turns to pale brown colour.
(3) To a few slices or small quantity of powder add 1 drop of iodine potassium iodide TS, a deep red colour is produced.

Water Carry out the determination of water (Appendix Ⅸ H, method 1), not more than 15.0 per cent.

Total ash Not more than 4.0 per cent (Appendix Ⅸ K).

Acid-insoluble ash Not more than 2.0 per cent (Appendix Ⅸ K).

Processing Soak Poria in water, wash clean and steam briefly after softened. Cut into the skin, pieces, and thick slices separately in time, and then dry.

Action To cause urination, invigorate the spleen function, and calm the mind.

Indications Edema with oliguria; dizziness and palpitation caused by retained phlegm and morbid fluid; diminished function of the spleen marked by anorexia, loose stools or diarrhea; restlessness and insomnia.

Usage and dosage 9-15 g.

Storage Preserve in a dry place, protected from moisture.

Propolis
(蜂胶, Fengjiao)

Propolis

Propolis is the gum secreted by *Apis mellifera* L. (Fam. Apidae). The drug is collected from the bees-box in summer, removed from foreign matter.

Description Irregularly granular or fragment, mostly brownish-yellow, dark brown or greyish-brown, lustrous. Texture lax below 20℃, and gradually softening above 30℃ in the temperature Odour, aromatic; taste, bitter and pungent.

Identification To 0.5 g of powder, add 20 ml of methanol, ultrasonicate for 20 minutes, and filter, use the filtrate as the test solution. Dissolve chrysin CRS and galangin CRS in methanol to produce a mixture containing 1 mg of each per ml as the reference solution. Carry out the method for thin layer chromatography (Appendix Ⅵ B), using silica gel G as the coating substance and the mixture of chloroform, methanol and butanone (9.4∶0.3∶0.3) as the mobile phase. Apply separately 5 μl each of the two solutions to the plate. After developing and removal of the plate, dry in air. Spray with a aluminium chloride TS. Examine under ultraviolet light at 365nm. The fluorescent spots in the chromatogram obtained with the test solution correspond in position and colour to the spots in the chromatogram obtained with the reference solution.

Loss on Drying The powder is dried in a vacuum desiccator to constant weight, loses not more than 2.0 per cent (Appendix Ⅸ G).

Total ash Not more than 8.0 per cent (Appendix Ⅸ K).

Acid-insoluble ash Not more than 6.0 per cent (Appendix Ⅸ K).

Oxidation time Weigh accurately 1.0 g of the powder, in a stopper conical flask, add accurately 25 ml of ethanol, stopper tightly, shake for 60 minutes, and add accurately 100 ml of water, mix well, filter. Measure accurately 0.5 ml of the successive filtrate to a 50 ml of volumetric flask, dilute with water to volume, and mix well. Measure accurately 10.0 ml of the dilute solution to a stopper conical flask, add accurately 2 ml of 20% solution of sulfuric acid, shake for 1 minute, add accurately 0.05 ml of potassium permanganate VS (0.02 mol/L), and record the time with a chronometer at the same time. When the purpure of the liquid faded away, stop the clock. The recorded time is the oxidation time. It is not more than 22 seconds.

Extractives Carry out the cold maceration method for determination of ethanol-soluble extractives (Appendix Ⅹ A), using ethanol as the solvent, not less than 50.0 per cent.

Assay Carry out the method for high performance liquid chromatography (Appendix Ⅵ D).

Chromatographic system and system suitability Use octadecylsilane bonded silica gel as the stationary phase, a mixture of methanol and 0.15% solution of phosphoric acid (64∶36) as the mobile phase. As detector a spectrophotometer set at 268 nm. The number of theoretical plates of the column is not less than 6000, calculated with the reference to the peak of chrysin CRS.

Reference solution Weigh accurately 15 mg of chrysin CRS and 10 mg of galangin CRS, dissolve in methanol in a 50 ml volumetric flask respectively, dilute with methanol to volume, and mix well. Accurately measure 1 ml of separate solutions in a 10 ml volumetric flask respectively, dilute with methanol to volume, and mix well.

Test solution Weigh accurately 0.1 g of the coarse powder (pass through No. 4 sieve) to a Soxhlet's extractor, add 100 ml of acetone, heat under reflux on a water bath until to the extract solution colourless, concentrate the extract to almost dryness. Dissolve the residue with methanol, transfer to a 100 ml volumetric flask and dilute with methanol to volume, mix well.

Procedure Inject accurately 10 μl of the reference solution and the test solution into the column respectively, determine, and calculate the content.
It contains not less than 2.0 per cent of chrysin ($C_{15}H_{10}O_4$) and not less than 1.0 per cent of galangin ($C_{15}H_{10}O_5$), calculated with reference to the dried drug.

Processing *Propolis (processing with wine)* Crush lumps of Propolis to powder, dissolve it in ethanol, filter, evaporate the filtrate to dryness, and dry in air.

Action To resist bacteria and relieve inflammation, regulate immunity, resist oxygenation, and accelerate tissue healing.

Indications Used as an adjuvant for high lipemia and diabetes.

Usage and dosage 0.2-0.6 g, appropriate quantity for external use.

Precaution Used with caution for an allergy to this drug.

Storage Preserve in a cool and dry place.

Pseudobulbus Cremastrae seu Pleiones
(山慈菇, Shancigu)

Appendiculate Cremastra Pseudobulb or Common Pleione Pseudobulb

Appendiculate Cremastra Pseudobulb or Common

Pleione Pseudobulb is the dried pseudobulb of *Cremastra appendiculata* (D. Don) Makino, *Pleione bulbocodioides* (Franch.) Rolfe or *Pleione yunnanensis* Rolfe (Fam. Orchidaceae). The former is known as "Maocigu", and the latter two are known as "Bingqiuzi". The drug is collected in summer and autumn, removed from the aerial part and soil, sorted according to size, steamed thoroughly with boiling water, and dried.

Description *Maocigu* Irregularly oblate or conical, top gradually protruding, base with rootlet scars, 1.8-3 cm long, the swollen part 1-2 cm in diameter. External yellowish-brown or brown, with longitudinal wrinkles and furrows, and exhibiting 2-3 slight prominent and ringed nodes with remainings of some filiform fibres, derived from the withering and decaying scaly leaves. Texture hard, not easily broken, fracture greyish-white or yellowish-white, slightly horny, Odour, slight; taste, weak and sticky.

Bingqiuzi Conical, bottleneck-like or in irregular masses, 1-2 cm in diameter, 1.5-2.5 cm high. Top acuminate, the broken tip dish-shaped, base swollen and rounded-flattened, dented at middle, with 1-2 ringed nodes, mostly inclined to one side. Externally yellowish-white for the peeled drug and brownish for the unpeeled, smooth with irregular wrinkles. Fracture yellowish, horny and translucent.

Identification Transverse section: *Maocigu* The outermost consisting of a layer of flattened epidermal cells, 2-3 layers of sclerenchymatous cells beneath, yellowish, the innermost consisting of large subrounded parenchymatous cells containing mucilage and starch granules. Parenchymatous cells near the epidermis containing raphides of calcium oxalate, 70-150 μm long. Vascular bundles scattered, collateral.

Bingqiuzi Epidermal cells tangentially elongated, starch granules occurring in small parenchymatous cells, fibres of vascular bundle sheath crescent, occasionally double-crescent.

Processing Eliminate foreign matter, soak for about 1 hour, soften thoroughly, cut into thin slices, and dry, or dry after washing. Pound to pieces before use.

Action To remove *toxic-heat*, and resolve *phlegm* to disintegrate lumps.

Indications Carbuncles, boils, scrofula, subcutaneous nodules; snake and insectbite.

Usage and dosage 3-9 g; appropriate quantity for external use.

Storage Preserve in a dry place.

Pulvis Fellis Suis (猪胆粉, Zhudanfen)

Pig Gall Powder

Pig Gall Powder, is the dried bile of *Sus scrofa domestica* Brisson (Fam. Suidae).

Processing Take pig bile, filter, dry and pulverize.

Description Yellow, greyish-yellow powder. Odour, slightly stinking. Taste, bitter, easily moistened.

Identification Carry out the method for thin layer chromatography (Appendix Ⅵ B). using silica gel G as the coating substance and the upper layer of a freshly prepared mixture of isooctane, ether, glacial acetic acid, *n*-butanol and water (10∶5∶5∶3∶1) as the mobile phase. Apply separately to the plate 2 μl each of the test solution and the reference solution of hyodeoxycholic acid both obtained under Assay. After developing and removal of the plate, dry in air, spray with a 10% solution of sulfuric acid in ethanol, heat at 105℃ to visualize clearly. Examine under daylight and ultraviolet light at 365 nm. The spot in the chromatogram obtained with the test solution corresponds in position and colour to the spot in the chromatogram obtained with the reference solution.

Fellis Bovis, Fellis Caprae seu Ovis Take 0.1 g each of Fellis Bovis reference drug and Fellis Caprae seu Ovis reference drug, produce two reference drug solutions in the same manner as preparation of the test solution under Assay, beginning at the words" add 5 ml of 10% solution of sodium hydroxide...". Carry out the method for thin layer chromatography (Appendix Ⅵ B), using silica gel G as the coating substance, apply separately to the plate 2 μl each of the test solution obtained under Assay and the above two reference drug solutions. Developing and visualizing in the same manner as described under the test of Identification. The spots in the chromatogram obtained with the test solution should not be corresponding in position and colour to the spots in the chromatogram obtained with the reference drug solutions.

Reducing sugars Dissolve 10 mg of the powder in 2 ml of water, add several drops of α-naphthol in ethanol (1→50), mix well, add dropwise 0.5 ml of sulfuric acid along the tube wall, a purplish-red ring is not visible at the junction of the two layers.

Foreign organic matter Dissolve 10 mg of the powder in 2 ml of water, centrifuge or filter. Examine the residue under the microscope. No plant, animal tissues or starch is visible.

Water Weigh accurately 0.3 g of the powder, carry out the method for determination of water (Appendix Ⅸ H, method 3), not more than 10.0 per cent.

Assay Weigh accurately 0.1 g of the fine powder, add 5 ml of 10% solution of sodium hydroxide, heat at 120℃ for 4 hours, allow to cool. Add dropwise hydrochloric acid to adjust to pH 2-3, mix well. Extract with four 10-ml quantities of ethyl acetate, combine the extracts and evaporate to dryness. Dissolve the residue in ethanol, transfer to a 10 ml volumetric flask, dilute with ethanol to volume, mix well, used as the test solution. Weigh accurately a quantity of hyodeoxycholic acid CRS, previously dried over phosphorous pentoxide in vaccum for 24 hours, dissolve in ethanol to produce a solution containing 1 mg per ml as the reference solution. Carry out the method for thin layer chromatography (Appendix Ⅵ B), using silica gel G as the coating substance and the upper layer of a freshly prepared mixture of isooctane, ether, glacial acetic acid, *n*-butanol and water (10∶5∶5∶3∶1) as the mobile phase. Apply separately to the plate 1 μl of the test solution, 1 μl and 3 μl of the reference solution alternatively. After developing and removal of the plate, dry in air, spray with a 10% solution of sulfuric acid in ethanol and heat at 105℃ to visualize clearly. Cover the plate with a piece of glass of the same size and fix up the edge with tape. Carry out the method for thin layer chromatography (thin layer chromatographic scanning method, Appendix Ⅵ B), scan at wavelength of λ_S = 375 nm, λ_R = 650 nm. Measure the integration values of absorbance of the test solution and the reference solution, calculate the content.

It contains not less than 16.0 per cent of hyodeoxycholic acid ($C_{24}H_{40}O_4$), calculated with reference to the dried drug.

Action To remove *toxic-heat*, moisten *dry* and relieve cough and asthma.

Indications Dryness and thirst in febrile diseases inflammation of the eye; acute pharyngitis; jaundice; whooping cough; asthma; diarrhea and dysentery; constipation; carbuncle and boils.

Usage and dosage 0.3-0.6 g, take infused, or used in pills and powder. Appropriate quantity is mixed with water for topical application.

Storage Preserve in tightly closed container, protected from light and stored in a cool and dry place.

Pulvis Talci
(滑石粉, Huashifen)

Talc Powder

Talc Powder is a powder prepared from talc by sorting, cleaning, pulverizing and drying.

Description A white or almost white, fine, sandless powder, unctuous on touching. Odour, slight; and tasteless. Insoluble in water and dilute solutions of hydrochloric acid and sodium hydroxide.

Identification Complies with Identification tests (1) and (2) described under Talcum.

Acidity or alkalinity Boil 10 g of the powder with 50 ml of water for 30 minutes, supplement the water loss in evaporation frequently, cool, filter, the filtrate is neutral to litmus paper.

Water-soluble matter Boil 5 g of the powder with 30 ml of water for 30 minutes, compensate the water loss in evaporation frequently, cool, filter. Wash the residue with 5 ml of water. Combine the washings with the filtrate and evaporate to dryness, then dry at 105℃ for 1 hour. The residue is not more than 5 mg (0.1 per cent).

Acid-soluble matter Macerate 1 g of the powder in 20 ml of dilute hydrochloric acid TS, at 50℃ for 15 minutes, filter. To 10 ml of the filtrate, add 1 ml of dilute sulfuric acid TS, evaporate to dryness and ignite to constant weight. The residue is not more than 7.5 mg (1.5 per cent).

Ferric salt Boil 10 g of the powder with 30 ml of water for 30 minutes, compensate the water loss in evaporation frequently, cool, filter. To the filtrate add 1 ml of dilute hydrochloric acid TS and 1 ml of potassium ferrocynide TS, no blue colour is produced immediately.

Loss on ignition Ignite the powder to constant weight at 600-700℃, loses not more than 5.0 per cent of its weight.

Action and indications As described under Talcum.

Usage and dosage 10-20 g; decocted with wrapping; appropriate quantity for external use.

Storage Preserve in a well closed container.

Pyritum
(自然铜, Zirantong)

Pyrite

Pyrite is a mineral of sulfides of pyrite group, containing mainly iron sulfide (FeS_2). The drug is collected, and removed from foreign matter.

Description Cube-like crystals, aggregated in dense masses, externally bright pale yellow, with lustre of metal, some yellowish-brown or dark brown, without lustre of metal. Streaks greenish-black or brownish-red. Texture heavy and hard or slightly fragile, easily broken. Fracture yellowish-white, with lustre of metal, or brown, with silvery sparkle.

Identification To 1 g of the powder add 4 ml of dilute hydrochloric acid TS, shake and filter. The filtrate yields the reactions characteristic of ferric salts (Appendix Ⅳ).

Processing *Pyritum* Eliminate foreign matter, wash clean, dry. Break to pieces before use.

Pyritum (calcined) Calcine the clean Pyritum as described under the method for calcining openly (Appendix Ⅱ D) to dark red, quench with vinegar until the colour of the surface turns to blackish-brown, lustre disappears and the texture becomes loose, using 30 kg of vinegar per 100 kg of Pyritum.

Action To eliminate blood stasis, promote healing of fracture and to relieve pain.

Indications Traumatic swelling and pain, bone fracture.

Usage and dosage 3-9 g, mostly used as an ingredient in pills or powder, or decocted first. Appropriate quantity for external use.

Storage Preserve in a dry place.

Radix Achyranthis Bidentatae (牛膝, Niuxi)

Twotoothed Achyranthes Root

Twotoothed Achyranthes Root is the dried root of *Achyrantes bidentata* Bl. (Fam. Amaranthaceae). The drug is collected in winter when the aerial part is withered, removed from rootlet and soil, tied up in a small bundle, sun-dried to be wrinkled externally, cut evenly at the summit, and then dried thoroughly.

Description Slender cylindrical, straight or slightly curved, 15-70 cm, 0.4-1 cm in diameter. Externally greyish-yellow or pale brown, with slightly twisted and fine longitudinal wrinkles, transverse lenticel-like protrudings and sparse rootlet scars. Texture hard and fragile, easily broken, softened when moistened, fracture even, pale brown, slightly horny and oily. Xylem of vascular bundles in the centre relatively large, yellowish-white, the outside scattered with many spotted vascular bundles arranged in 2-4 whorls. Odour, slight; taste, slightly sweet, somewhat bitter and astringent.

Identification (1) Transverse section: Cork consisting of several layers of flattened cells, tangentially elongated. Phelloderm relatively narrow. Collateral vascular bundles arranged in 2-4 interrupted whorls, relatively small in the outermost whorl, some only 1 to several vessels, cambium nearly in a ring, vascular bundles relatively large inward; xylem consisting of vessels and small xylem fibres, aggregated into 2-3 groups in the central. Parenchymatous cells containing sand crystals of calcium oxalate.
(2) To 2 g of the powder add 20 ml of ethanol, heat under reflux for 40 minutes, and allow to stand. To 10 ml of the supernatant liquid add 1 ml of hydrochloric acid, heat under reflux for 1 hour, concentrate to about 5 ml, add 10 ml of water, extract with 20 ml of petroleum ether (60-90℃). Evaporate the extract to dryness, dissolve the residue in 2 ml of ethanol as the test solution. Dissolve oleanolic acid CRS in ethanol to produce a solution containing 1 mg per ml as the reference solution. Carry out the method for thin layer chromatography (Appendix Ⅵ B), using silica gel H mixed with sodium carboxymethylcellulose as the coating substance and a mixture of chloroform and methanol (40∶1) as the mobile phase. Apply separately to the plate 10-20 μl of the test solution and 10 μl of the reference solution. After developing and removal of the plate, dry in air, spray with phosphomolybdic acid TS, and heat at 110℃ to the spots distinct. The blue spot in the chromatogram obtained with the test solution corresponds in position and colour to the spot in the chromatogram obtained with the reference solution.

Water Carry out the method for determination of water (Appendix Ⅸ H, method 1), not more than 15.0 per cent.

Total ash Not more than 9.0 per cent (Appendix Ⅸ D).

Acid-insoluble ash Not more than 1.0 per cent (Appendix Ⅸ K).

Extractives Carry out the method for determination of ethanol-soluble extractives (Appendix Ⅹ A, the hot extraction method), using *n*-butanol saturated with water as the solvent, not less than 6.5 per cent.

Processing *Radix Achyranthis Bidentatae* Eliminate foreign matter, wash clean, soften thoroughly, remove remains of rhizomes, cut into sections, and dry in the sun.

Radix Achyranthis Bidentatae (*processed with wine*) Stir-bake the sections of Radix Achyranthis Bidentatae as described under the method for stir-baking with wine (Appendix Ⅱ D) to dryness.

Action To replenish the liver and the kidney, strengthen the tendons and bones, eliminate *blood stagnation* and stimulate menstruation, and lead blood to flow downward.

Indications Aching of the lumbar and knee joints with weakness in the legs; amenorrhea with mass formation in the abdomen; dizziness due to hyperactivity of the liver.

Usage and dosage 4.5-9 g.

Precaution Used with caution in pregnancy.

Storage Preserve in a cool and dry place, protected from moisture.

Radix Aconiti (川乌, Chuanwu)

Common Monkshood Mother Root

Common Monkshood Mother Root is the dried parent root tuber of *Aconitum carmichaeli* Debx. (Fam. Ranunculaceae). The drug is collected from late June to early August, removed from daughter root, rootlet and soil, and dried in the sun.

Description Irregularly conical, slightly curved, apex often with remains of stem, mostly swollen to one side in the middle, 2-7.5 cm long, 1.2-2.5 cm in diameter. Externally brown or greyish-brown, shrunken, with tuberculate rootlets and scars of daughter roots. Texture campact, fracture whitish or greyish-yellow, cambium ring polygonal. Odour, slight; taste, pungent and numb.

Identification (1) Transverse section: Metaderm consisting of brown suberized cells; stone cells occasional in cortical parenchyma, singly scattered or in groups, subrectangular, square or long-elliptical, with a large lumen; endodermis indistinct. Sieve tube groups scattered in phloem; fibre bundles occasional in the inner part of phloem. Cambium ring subpolygonal, one or more abnormal vascular bundles occasional present in the inner or the outer side. Vessels in xylem consisting of several rows, arranged radially or in V-shape. Pith distinct. Parenchymatous cells filled with starch granules.
Powder: Greyish-yellow. Simple starch granules spheroidal, elongated rounded or reniform, 3-22 μm in diameter; compound granules consisting of 2-15 components. Stone cells nearly colourless or pale yellowish-green, subrectangular, subsquare, polygonal or oblique at one side, 49-117 μm in diameter, 113-280 μm long, walls 4-13 μm thick, the thick-walled stone cells distinctly striated and thin pitted. Cells of metaderm brown, some walls unevenly thickened, some appearing tubercular and projecting into lumen. Bordered pitted vessels pale yellow, 29-70 μm in diameter, the ends truncate or acute, perforated at the end walls or side walls, some vessel elements thick and short, tortuous or connected vertically and horizontally.
(2) To about 5 g of the powder add 30 ml of ether and 3 ml of ammonia TS, macerate for 1 hour, shake frequently, and filter. Evaporate 6 ml of the filtrate to dryness, add 10 drops of 7% solution of hydroxylamine hydrochloride in

methanol and 2 drops of 0.1% solution of thymolphthalein in methanol, add dropwise a saturated solution of potassium hydroxide in methanol until the colour turns blue, and add 4 drops again, heat on a water bath for 1 minute, cool in cold water, adjust to pH 2-3 with dilute hydrochloric acid, then add 1-2 drops of ferric chloride TS and 1 ml of chloroform, shake, a violet colour is produced in the upper layer.

(3) To 0.5 g of the powder add 10 ml of ether and 0.5 ml of ammonia TS, shake for 10 minutes and filter. Extract the filtrate by shaking in a separating funnel with 20 ml of 0.25 mol/L solution of sulfuric acid. Dilute a quantity of the acid solution with water. Carry out the method for ultraviolet spectrophotometry and colourimetry (Appendix Ⅴ A), the maximum absorption exhibits at 231 nm.

Total ash Not more than 9.0 per cent (Appendix Ⅸ K).

Acid-insoluble ash Not more than 2.0 per cent (Appendix Ⅸ K).

Processing *Radix Aconiti* (*unprocessed*) Eliminate foreign matter. Break to pieces before use.

Action To relieve rheumatic conditions and alleviate pain by warming *meridians*.

Indications Joint pain in rheumatic or rheumatoid arthritis, epigastric pain with cold sensation, or abdominal colic due to cold, also used as an analgesic.

Usage and dosage Usually used after processed.

Precaution Be cautious about the unprocessed root taken orally. Incompatible with Bulbus Fritillariae, Rhizoma Pinelliae, Rhizoma Bletillae, Radix Ampelopsis, Radix Trichosanthis and Fructus Trichosanthis.

Storage Preserve in a ventilated dry place, protected from moth.

Radix Aconiti Kusnezoffii (草乌, Caowu)

Kusnezoff Monkshood Root

Kusnezoff Monkshood Root is the dried root tuber of *Aconitum kusnezoffii* Reichb. (Fam. Ranunculaceae). The drug is collected in autumn when the aerial part is withered, removed from rootlet, soil, and dried.

Description Irregularly long-conical, slightly curved, 2-7 cm long, 0.6-1.8 cm in diameter. Apex usually with remains of stem and a few adventitious root bases, sometimes apex bearing a withered bud at one side and a circular or oblate base of adventitious root at the other side. Externally greyish-brown or blackish-brown, shrivelled, with longitudinal wrinkles, dotted rootlet scars and several tubercular lateral roots. Texture hard, fracture greyish-white or dark grey, with fissures, cambium ring polygonal or subrounded, pith relatively large or hollowed. Odour, slight; taste, pungent and numb.

Identification (1) Transverse section: Metaderm consisting of 7-8 layers of brownish-yellow suberized cells; cortex with stone cells, single or 2-5 grouped, subrectangular, square or oblong, lumina large, endodermis distinct. Phloem broad, usually with irregular clefts, groups of sieve-tubes abundant. Cambium ring irregularly polygonal or subrounded. Vessels in xylem in 1-4 rows or several in grouped, located inside each angle of the cambium, some containing brownish-yellow contents. Pith relatively large. Parenchymatous cells filled with starch granules.

Powder: Greyish-brown. Simple starch granules subrounded, 2-23 μm in diameter; compound granules consisting of 2-16 components. Stone cells colourless, but brown on adhering to the fragments of metaderm, subsquare, subrectangular, subrounded, fusiform or elongated rectangular, 20-133-234 μm in diameter, up to 465 μm long, walls varying in thickness, the thick-walled cells distinctly striated and finely pitted, some containing brown contents. Cells of metaderm brown, subsquare or long-polygonal in surface view, walls unevenly thickened, some appearing tubercular and projecting into lumen.

(2) To 0.5 g of the powder add 10 ml of ether and 0.5 ml of ammonia TS, shake for 10 minutes, filter. Extract the filtrate by shaking in a separating funnel with 20 ml of sulfuric acid solution (0.25 mol/L). Dilute a quantity of the acidic solution with water, carry out the method for ultraviolet spectrophotometry and colourimetry (Appendix Ⅴ A), the solution exhibits the maxima absorption at 231 nm and 275 nm.

(3) To 1 g of the coarse powder add 15 ml of ether and 1 ml of ammonia TS, macerate for 1 hour with constant shaking, filter. Evaporate 5 ml of the filtrate to dryness. To the residue add 5 drops of 7% solution of hydroxylamine hydrochloride in methanol and 1 drop of 0.1% solution of thymolphthalein in methanol, add dropwise saturated solution of potassium hydroxide in methanol until the colour turns blue, and add in excess of 2 drops, heat on a water bath at 60℃ for 1-2 minutes, cool in cold water, adjust to pH 2-3 with dilute hydrochloric acid, then add 1 drop of ferric chloride TS and 1 drop of chloroform, shake, a violet colour is produced in the upper layer.

Foreign matter Not more than 5 per cent (Appendix Ⅸ A).

Total ash Not more than 6.0 per cent (Appendix Ⅸ K).

Acid-insoluble ash Not more than 1.0 per cent (Appendix Ⅸ K).

Processing *Radix Aconiti Kusnezoffii* (*unprepared*) Eliminate foreign matter, wash clean, and dry.

Action To relieve rheumatic conditions, warm the *meridians* and alleviate pain.

Indications Rheumatic and rheumatoid arthralgia; precordial and abdominal pain with cold sensation; abdominal colic caused by cold; anaethesia also used as an analgesic.

Usage and dosage Usually used after processed.

Precaution Be cautious about the unprocessed root taken orally. Incompatible with Bulbus Fritillariae, Rhizoma Pinelliae, Rhizoma Bletillae, Radix Ampelopsis, Radix Trichosanthis, and Fructus Trichosanthis.

Storage Preserve in a ventilated dry place, protected from moth.

Radix Aconiti Kusnezoffii Praeparata (制草乌, Zhicaowu)

Prepared Kusnezoff Monkshood Root

The drug is the processed Radix Aconiti Kusnezoffii.

Processing Grade Radix Aconiti Kusnezoffii according to size. Macerate it in water until there is no dry core. Take out, boil in water until there is no white core in the larger root and the taste becomes slightly numb. After removal, allow it to dry in air appropriately, cut into slices, and dry.

Description Irregularly rounded or nearly triangular slices.

Externally dark brown, with a greyish-white polyangular cambium ring, dotted vascular bundles and clefts; the edges wrinkled or curved. Texture fragile. Odour, slight; taste, slightly pungent and numb.

Identification Complies with the test (2) of Identification described under Radix Aconiti Kusnezoffii.

Diester-alkaloids Complies with the test for diester-alkaloids described under Radix Aconiti Preparata.

Assay Carry out the Assay described under Radix Aconiti Preparata, it complies with the requirements.

Action and indications As described under Radix Aconiti Kusnezoffii.

Usage and dosage 1.5-3 g; decocted first or for a long time.

Precaution and Storage As described under Radix Aconiti Praeparata.

Radix Aconiti Lateralis Praeparata (附子, Fuzi)

Prepared Common Monkshood Daughter Root

Prepared Common Monkshood Daughter Root is the processed daughter root of *Aconitum carmichaeli* Debx. (Fam. Ranunculaceae). The drug is collected in late June to early August, removed from the parent root, rootlet and soil. It is known as "Nifuzi", which can be processed into the following commercial varieties:

(1) Select the large and uniform Nifuzi, wash clean and soak over night in edible mother liquor of mineral salt preparation. Add salt, soak and take it out to sun-dry and air-dry every day. Gradually prolong the time for dryness until a lot of salt is crystallized on the surface of the drug and its texture becomes hard. It is known as "Yanfuzi".
(2) Grade Nifuzi according to size, wash clean and soak in edible mother liquor of mineral salt preparation for several days. Boil in the infusion thoroughly. Take out, rinse in water, cut longitudinally into slices about 0.5 cm in thickness. Soak and rinse in water once again. Stain the slices dark brown and steam them until the slices turn to be oily and lustrous. Bake the slices to half-dryness, and then sun-dry or bake to complete dryness. It is known as "Heishunpian".
(3) Select the Nifuzi of uniform size, wash clean and soak in edible mother liquor of mineral salt preparation for several days, Boil in the infusion thoroughly. Take out, peel the bark and cut longitudinally into slices about 0.3 cm in thickness. After soaking and rinsing in water, take out, steam thoroughly, sun-dry to dryness. It is known as "Baifupian".

Description *Yanfuzi* (*salted aconite daughter root*) Conical, 4-7 cm long, 3-5 cm in diameter. Externally greyish-black, covered with fine powder of salt, topped with depressed bud scars and encircled with tubercled short rootlets or rootlet scars. Texture heavy. Transversely cut surface greyish-brown, showing small clefts filled with fine powder of salt and a polyangular cambium ring, and vascular bundles arranged irregularly inside the ring. Odour, slight; taste, salty, numb and pungent.

Heishunpian (*black slice*) Longitudinal slices, the upper portion wide and the lower portion narrow, 1.7-5 cm long, 0.9-3 cm wide, 0.2-0.5 cm thick. The outer bark blackish-brown, cut surface dark yellow, oily and lustrous, translucent and showing longitudinal vascular bundles. Texture hard and fragile. Fracture horny. Odour, slight; taste, weak.

Baifupian (*white slice*) Without outer bark, yellowish-white, translucent, about 3 mm thick.

Identification To 4 g of the coarse powder of Heishunpian or Bai Fupian add 30 ml of ether and 5 ml of ammonia TS, shake for 20 minutes, filter. Transfer the filtrate to a separating funnel, extract with 20 ml of sulfuric acid solution (0.25 mol/L), separate the acid solution. Carry out the method for ultraviolent spectrophotometry and colourimetry (Appendix Ⅴ A), the light absorption exhibits maxima at 231 nm and 274 nm.

Limit test for Aconitine Weigh 20 g of the coarse powder of Hei Shunpian, Bai Fupian or Dan Fupian to a stoppered conical flask, add 150 ml of ether, shake for 10 minutes, then add 10 ml of ammonia TS, shake for 30 minutes, allow to stand for 1-2 hours. Evaporate the ether layer to dryness. Dissolve the residue in 2 ml of absolute ethanol as the test solution. Dissolve aconitine CRS in absolute ethanol to produce a solution containing 2 mg per ml as the reference solution. Carry out the method for thin layer chromatography (Appendix Ⅵ B), using alkaline aluminium oxide as the coating substance and a mixture of *n*-hexane and ethyl acetate (1∶1) as the mobile phase. Apply separately to the plate 6 μl of the test solution and 5 μl of the reference solution. After developing and removal of the plate, spray with a mixture of two equal volumes of potassium iodide-iodine TS and potassium iodobismuthate TS. The size of the spot in the chormatogram obtained with the test solution is less than the corresponding spot in the chromatogram obtained with the reference solution, or no spot reveals in the chromatogram obtained with the test solution.

Processing *Fupian* "Heishunpain" and "Baifupian" are used directly.

Danfupian Blanch "Yanfuzi" with water, 2-3 times a day until all salt is rinsed out. Boil together with Radix Glycyrrhizae, black beans and water until the centre of the cut surface is devoid of white core and the cut slice is numbless to the tongue. Remove Radix Glycyrrhizae and black beans, cut the drug into slices, and dry.
To each 100 kg of "Yanfuzi", add 5 kg of Radix Glycyrrhizae and 10 kg of black beans.

"Fupian" (*processed*) Scald "Fupian" with sand as described under the method for scalding (Appendix Ⅱ D) until it is inflated and slightly discoloured.

Action To cause restoration from collapse, reinforce *fire* and *yang*, and dispel *wind*, *cold* and *damp*.

Indications Collapse with cold limbs and faint pulse due to prostration of *yang*; impotence, *cold* in uterus; cold pain in the heart and abdomen, vomiting and diarrhea due to deficiency and *cold*; edema from *yin-cold*; afflictions from external pathogenic factors due to *yang* insufficiency; arthralgia.

Usage and dosage 3-15 g.

Precaution Contraindicated in pregnancy. Incompatible with Rhizoma Pinelliae, Fructus Trichosanthis, Bulbus Fritillariae, Radix Ampelopsis and Rhizoma Bletillae.

Storage Preserve "Yanfuzi" in well closed container, stored in a cool and dry place. Preserve "Heishunpian" and "Baifupian" in a dry place, protected from moisture.

Radix Aconiti Praeparata (制川乌, Zhichuanwu)

Prepared Common Monkshood Mother Root

The drug is the processed Radix Aconiti.

Processing Grade clean Radix Aconiti according to size, macerate in water until there is no dry core. Take them out, boil in water for 4 to 6 hours (or steam for 6 to 8 hours) until there is no white core in the relatively large and solid root and the taste becomes slightly numb. After removal, dry in the air appropriately, cut into slices, and dry.

Description Irregular or elongated triangular slices. Externally dark brown or yellowish-brown, with a greyish-brown cambium ring. Texture light and fragile, fracture lustrous. Odour, slight; taste, slightly numb.

Identification Complies with Test (3) of Identification described under Radix Aconiti.

Diester alkaloids *Reference solution* Weigh accurately 20 mg of aconitine CRS to a 10 ml volumetric flask, dissolve in absolute ethanol, and dilute to the volume.

Calibration standard Transfer accurately 0.25, 0.50, 1.0, 1.5, 2.0, 2.5 ml of the reference solution to 25 ml volumetric flasks respectively, add absolute ethanol to 2.5 ml, add accurately 1.5 ml of alkaline hydroxylamine hydrochloride TS respectively, and mix well. Warm on a water bath at 60-65℃ for 10 minutes and allow to cool. Add 13 ml of ferric perchlorate TS, mix well, and stand for 5 minutes. Then add accurately 8 ml of perchloric acid TS, dilute with ferric perchlorate TS to volume, mix well, and allow to stand for 15 minutes. Carry out the method for ultraviolet spectrophotometry and colourimetry (Appendix Ⅴ A), using the mixture of corresponding solvents as the blank, measure the absorbance at 520 nm, and plot the standard curve, using absorbance as ordinate and concentration as abscissa.

Procedure Weigh accurately 10 g of the coarse powder to a stopper conical flask, add 50 ml of ether and 4 ml of ammonia TS, stopper and shake thoroughly, allow to stand overnight and filter. Shake the drug residue with 50 ml of ether for 1 hour, and filter. Wash the residue with 3-4 quantities, each of 15 ml, of ether, and filter. Combine the filtrate and washings, and evaporate to dryness at a lower temperature. Dissolve the residue in 2 ml of chloroform, and transfer to a separating funnel. Wash the container with several 3-ml quantities of chloroform, and combine the washings to the separating funnel. Extract with three 5 ml quantities of sulfuric acid (0.05 mol/L), wash each acid solution by shaking with the same 10 ml of chloroform, successively, combine the acid solutions, adjust to pH 9 with ammonia TS, and extract with three 10-ml quantities of chloroform, wash each chloroform solution by shaking with the same 20 ml of water, combine the chloroform solutions, evaporate to dryness at a lower temperature. Dissolve the residue in a quantity of absolute ethanol, transfer to a 5 ml volumetric flask, wash the container in portions with absolute ethanol, combine the washings to the volumetric flask, dilute with absolute ethanol to volume, mix well. Transfer accurately 2.5 ml of each of the above solution and absolute ethanol (blank solution) to 25 ml volumetric flasks respectively. Measure the absorbance, as described under Calibration Standard, beginning at the words "add accurately 1.5 ml of alkaline hydroxylamine hydrochloride TS". Read out and calculate the weight (μg) of diester-alkaloids in the test solution from the standard curve.

It contains not more than 0.15 per cent of diesteralkaloids, calculated as aconitine ($C_{34}H_{47}NO_4$).

Assay Weigh accurately 10 g of the powder, carry out the method described under the procedure of Diester alkaloids, using a mixture of ether and chloroform (3∶1) instead of ether, beginning at the words "add 50 ml of ether" to "combine the filtrate and washings, evaporate to dryness at a lower temperature". Dissolve the residue in 5 ml of the mixture of ether and chloroform (3∶1), evaporate to dryness. Dissolve the residue again in 5 ml of ethanol, add 15 ml of sulfuric acid (0.01 mol/L) VS, accurately measured, 15 ml of water and 3 drops of methyl red IS, and titrate with sodium hydroxide (0.02 mol/L) VS until a yellow colour is produced. Each ml of sulfuric acid (0.01 mol/L) VS is equivalent to 12.9 mg of aconitine ($C_{34}H_{47}NO_{11}$).

It contains not less than 0.20 per cent of alkaloide, calculated as aconitine ($C_{34}H_{47}NO_{11}$).

Action and indications As described under Radix Aconiti.

Usage and dosage 1.5-3 g, decocted first or for a long time.

Precaution Used with caution in pregnancy. Incompatible with Bulbus Fritillariae, Rhizoma Pinelliae, Rhizoma Bletillae, Radix Ampelopsis, Radix Trichosanthis and Fructus Trichosanthis.

Storage Preserve in a ventilated dry place, protected from moth.

Radix Adenophorae (南沙参, Nanshashen)

Fourleaf Ladybell Root

Fourleaf Ladybell Root is the dried root of *Adenophora tetraphylla* (Thunb.) Fisch. or *Adenophora stricta* Miq. (Fam. Campanulaceae). The drug is collected in spring and autumn, removed from rootlet, washed, deprived of the coarse bark while still fresh, washed again, and dried.

Description Conical or cylindrical, slightly curved, 7-27 cm long, 0.8-3 cm in diameter. Externally yellowish-white or pale brownish-yellow, usually exhibiting patches of bark in depressions, mostly with deeply depressed transverse striations appearing interrupted-annulated at the upper part and with longitudinal striations and furrows at the lower part. Apex bearing one or two rhizomes. Texture light and spongy, easily broken, fracture uneven, yellowish-white, much cleft. Odour, slight; taste, sweetish.

Identification (1) Powder: Greyish-yellow. Cork stone cells subrectangular, sliver-shaped, subrounded or subpolygonal, 18-155 μm long, 18-61 μm wide, some anticlinal walls beaded. Articulate laticiferous tubes often linked reticularly. Inulins fan-shaped, subrounded or irregular.

(2) Heat 2 g of the coarse powder in 20 ml of water on a water bath for 10 minutes, and filter. To 2 ml of the filtrate add 2-3 drops of 5% solution of α-naphthol in ethanol, mix well, then add 0.5 ml of sulfuric acid slowly along the tube wall: a purplish-red ring is produced at the junction of the liquids. Heat another 2 ml of the filtrate with 4-5 drops of alkaline cupric tartrate TS on a water bath for 5 minutes, a reddish-brown precipitate is produced.

(3) To 2 g of the powder add 30 ml of methanol, heat under

reflux for 1 hour, filter, and evaporate to dryness. Dissolve the residue in 1 ml of methanol as the test solution. Prepare a solution of 2 g of Radix Adenophorae reference drug in the same manner as the reference drug solution. Carry out the method for thin layer chromatography (Appendix Ⅵ B), using silica gel G as the coating substance and a mixture of chloroform, methanol and formic acid (9∶1∶2) as the mobile phase. Apply separately to the plate 2-5 μl of the test solution and 3 μl of the reference drug solution. After developing and removal of the plate, dry in air. Spray with phosphomolybdic acid TS, and heat at 105℃ to the spots clear. The spots in the chromatogram obtained with the test solution correspond in position and colour to the spots in the chromatogram obtained with the reference drug solution.

Water Carry out the method for the determination of water (Appendix Ⅸ H, Method 1), not more than 15.0 per cent.

Total ash Not more than 6.0 per cent (Appendix Ⅸ K).

Acid-insoluble ash Not more than 2.0 per cent (Appendix Ⅸ K).

Extractives Carry out the hot extraction method as described under the determination of ethanol-soluble extractives (Appendix Ⅹ A), using dilute ethanol as the solvent, not less than 30.0 per cent.

Processing Remove rhizomes, wash, soften thoroughly, cut into thick slices, and dry.

Action To nourish *yin* and remove *heat* from the lung, resolve *phlegm*, and reinforce *qi*.

Indications Dry cough due to *lung-dryness*; chronic cough from *yin* deficiency; cough with sticky phlegm, insufficient *qi* and *yin*; fever and thirst.

Usage and dosage 9-15 g.

Precaution Incompatible with Rhizoma et Radix Veratri.

Storage Preserve in a ventilated dry place, protected from moth.

Radix Ampelopsis (白薇, Bailian)

Japanese Ampelopsis Root

Japanese Ampelopsis Root is the dried root tuber of *Ampelopsis japonica* (Thunb.) Makino (Fam. Vitaceae). The drug is collected in spring and autumn, removed from rootlet and soil, cut into longitudinal segments or oblique slices, and dried in the sun.

Description Longiluminal segments oblong or nearly fusiform, 4-10 cm long, 1-2 cm in diameter; edges usually rolled inwards, a raised ridge occurring at the centre. The outer bark reddish-brown, with longitudinal wrinkles, transverse fine striations and transverse elongated lenticels, easily detachable in flakes, the exposed layer reddish-brown. Oblique slices ovate, 2.5-5 cm long, 2-3 cm wide, cut surface whitish or pale reddish-brown, exhibiting radial lines, edges relatively thick, slightly raised upward or slightly curved. Texture light, hard and fragile, easily broken, dusting on breaking. Odour, slight; taste, sweetish.

Identification (1) Powder: Pale reddish-brown. Starch granules single, oblong, long-ovoid, reniform or irregular, 3-13 in diameter, hilum indistinct; compound granules less. Needles of calcium oxalate 86-169 μm long, scattered or grouped into bundles in mucilage cells. Clusters of calcium oxalate 25-78 μm in diameter, with broad and large angles. Bordered pitted vessels 35-60 μm in diameter.

(2) To 2 g of the powder add 30 ml of ethanol, heat under reflux for 1 hour, filter, and evaporate to dryness. Dissolve the residue in 2 ml of ethanol as the test solution. Prepare a solution of 2 g of Radix Ampelopsis reference drug in the same manner as the reference drug solution. Carry out the method for thin layer chromatography (Appendix Ⅵ B), using silica gel G as the coating substance and a mixture of chloroform and methanol (6∶1) as the mobile phase. Apply separately to the plate 5 μl of each of the two solutions. After developing and removal of the plate, dry in air. Spray with 10% sulfuric acid in ethanol and heat at 105℃ to the spots clear. The spots in the chromatogram obtained with the test solution correspond in position and colour to the spots in the chromatogram obtained with the reference drug solution.

Foreign matter Not more than 3.0 per cent (Appendix Ⅸ A).

Water Carry out the method for the determination of water (Appendix Ⅸ H, Method 1), not more than 15.0 per cent.

Total ash Not more than 12.0 per cent (Appendix Ⅸ K).

Acid-insoluble ash Not more than 3.0 per cent (Appendix Ⅸ K).

Extractives Carry out the cold maceration extraction method as described under the determination of ethanol-soluble extractives (Appendix Ⅹ A), using 25% ethanol as the solvent, not less than 18.0 per cent.

Processing Eliminate foreign matter, wash clean, soften thoroughly, cut into thick slices, and dry.

Action To remove *toxic-heat*, cure carbuncles, and reduce nodules.

Indications Carbuncle, deep-rooted abscesses, scrofula, scalds and burns.

Usage and dosage 4.5-9 g; appropriate quantity is decocted for washing or ground into fine powder for topical application.

Precaution Incompatible with Radix Aconiti and allied drugs.

Storage Preserve in a ventilated dry place, protected from moth.

Radix Angelicae Dahuricae (白芷, Baizhi)

Dahurian Angelica Root

Dahurian Angelica Root is the dried root of *Angelica dahurica* (Fisch. ex Hoffm.) Benth. et Hook. f. or *Angelica dahurica* (Fisch. ex Hoffm.) Benth. et Hook. f. var. *formosana* (Boiss.) Shan et Yuan (Fam. Umbelliferae). The drug is collected in summer or autumn when leaves turn yellow, removed from rootlet and soil, and dried in the sun or at a lower temperature.

Description Long-conical, 10-25 cm long, 1.5-2.5 cm in diameter. Externally greyish-brown or yellowish-brown, the root stock obtusely quadrangular or subrounded, with longitudinal wrinkles, rootlet scars and lenticel-like transverse protrudings, some of them arranged in 4

longitudinal rows. Apex with dented stem scars. Texture compact, fracture white or greyish-white and starchy, cambium ring brown, subsquare or subrounded, scattered with many brown oil dots in bark. Odour, aromatic; taste, pungent and bitterish.

Identification To 0.5 g of the powder add 10 ml of ether, soak for 1 hour and shake frequently, filter, evaporate the filtrate to dryness, dissolve the residue in 1 ml of ethyl acetate as the test solution. Dissolve imperatorin CRS and isoimperatorin CRS in ethyl acetate to produce a mixture containing 1 mg of each per ml as the reference solution. Carry out the method for thin layer chromatography (Appendix Ⅵ B), using silica gel G mixed with carboxymethylcellulose sodium as the coating substance and a mixture of petroleum ether (30-60℃) and ether (3∶2) as the mobile phase. Apply separately 4 μl of each of the two solutions to the plate. After developing below 25℃ and removal of the plate, dry in air, examine under ultraviolet light at 365 nm. The fluorescent spots in the chromatogram obtained with the test solution correspond in position and colour to the spots in the chromatogram obtained with the reference solution.

Water Carry out the method for determination of water (Appendix Ⅸ H, method 2), not more than 14.0 per cent.

Total ash Not more than 6.0 per cent (Appendix Ⅸ K).

Acid-insoluble ash Not more than 1.5 per cent (Appendix Ⅸ K).

Extractives Carry out the method for determination of ethanol-soluble extractives (Appendix Ⅹ A, the hot extraction method), using dilute ethanol as the solvent, not less than 15.0 per cent.

Assay Carry out the method for high performance liquid chromatography (Appendix Ⅵ D).

Chromatographic system and system suitability Use octadecylsilane bonded silica gel as the stationary phase and a mixture of methanol and water (55∶45) as the mobile phase. As detector a spectrophotometer set at 300 nm. The number of theoretical plates of the column is not less than 3000, calculated with the reference to the peak of imperatorin.

Reference solution Weigh accurately a quantity of imperatorin CRS, dissolve in methanol to produce a solution containing 10 μg per ml.

Test solution Weigh accurately 0.4 g of the powder to a 50 ml volumetric flask, add 45 ml of methanol, ultrasonicate for 1 hour, cool and dilute with methanol to volume, mix well and filter.

Procedure Inject accurately 20 μl of each of the reference solution and the test solution, respectively, into the column, and calculate the content.
It contains not less than 0.080 per cent of imperatorin ($C_{16}H_{14}O_4$), calculated with reference to the dried drug.

Processing Eliminate foreign matter, grade according to size, soak briefly, soften thoroughly, cut into thick slices, and dry.

Action To dispel *wind*, remove *damp*, clear nasal obstruction, relieve pain, and promote the subsidence of swelling and drain pus.

Indications Common cold and headache, particularly pain in supra-orbital ridge, and stuffy nose; sinusitis; toothache; leukorrhalgia; swelling and abscesses.

Usage and dosage 3-9 g.

Storage Preserve in a cool and dry place, protected from moth.

Radix Angelicae Pubescentis (独活, Duhuo)

Doubleteeth Pubescent Angelica Root

Doubleteeth Pubescent Angelica Root is the dried root of *Angelica pubescens* Maxim. f. *biserrata* Shan et Yuan (Fam. Umbelliferae). The drug is collected in early spring before sprouting, or in the end of autumn when stem and leaves wither, removed from rootlet and soil, baked to half-dryness, piled up for 2-3 days to soften, and then baked to dryness.

Description Somewhat cylindrical, with 2-3 or more branches at the lower part, 10-30 cm long. Root stock enlarged, conical, with abundant transverse wrinkles, 1.5-3 cm in diameter, apex exhibiting remains of stems and leaves or sunken spots. Externally greyish-brown or dark brown, longitudinally wrinkled, with transverse lenticel-like protrudings and slightly prominent scars of rootlets. Texture relatively hard, soft when moistened; fracture showing bark greyish-white, scattered with abundant brown oil cavities, wood greyish-yellow to yellowish-brown, and cambium ring brown. Odour, characteristic and aromatic; taste, bitter and pungent, slightly numb.

Identification (1) Transeverse section: Cork consisting of several layers of cells. Phelloderm narrow, with fewer oil cavities. Phloem broad, occupying about 1/2 the radius of root; oil cavities relatively abundant, arranged in several rings, up to 153 μm tangentially, surrounded by 6-10 secretory cells. Cambium in a ring. Xylem ray 1-2 rows of cells wide. Vessels sparse, up to 84 μm in diameter, frequently arranged singly and radially. Parenchymatous cells containing starch granules.
(2) To 2 g of the powder add 10 ml of ether, macerate overnight and filter. Evaporate the filtrate to dryness, dissolve the residue in 2 ml of chloroform as the test solution. Prepare a solution of 2 g of Radix Angelicae Pubescentis reference drug in the same manner as the reference drug solution. Carry out the method for thin layer chromatography (Appendix Ⅵ B), using silica gel G as the coating substance and a mixture of *n*-hexane, benzene and ethyl acetate (2∶1∶1) as the mobile phase. Apply separately to the plate 2 μl of each of the two solutions. After developing and removal of the plate, dry in air. Examine under ultraviolet light at 365 nm. The fluorescent spots in the chromatogram obtained with the test solution correspond in position and colour to the spots in the chromatogram obtained with the reference drug solution.

Total ash Not more than 8.0 per cent (Appendix Ⅸ K).

Extractives Ether-soluble extractives: Weigh accurately about 2 g of the powder (through No. 4 sieve), previously dried over phosphorous pentoxide for 48 hours, to a 100 ml conical flask, add 70 ml of ether and several glass beads. Heat under reflux to slightly boil for 4 hours, cool and filter. Wash the flask and residue with a quantity of ether. Combine the washings and filtrate to a 100 ml volumetric flask, add ether to volume, mix well. Transfer accurately 50 ml of the solution to an tared evaporating dish. Expel the ether and dry it over phosphorous pentoxide for 24 hours. Weigh accurately and quickly.
It contains not less than 3.0 per cent of ether-soluble extractives.

Assay Carry out the method for high performance liquid

chromatography (Appendix Ⅵ D).

Chromatographic system and system suitability Use octadecylsilane bonded silica gel as the stationary phase and a mixture of acetonitrile and water (60 : 40) as the mobile phase. As detector a spectrophotometer set at 322 nm. The number of theoretical plates of the column is not less than 6000, calculated with the reference to the peak of osthole.

Reference solution Weigh accurately a quantity of osthole CRS, dissolve in methanol to produce a solution containing 50 μg per ml.

Test solution Weigh accurately 0.5 g of the powder (through No. 3 sieve) to a stoppered conical flask, add accurately 20 ml of methanol, and weigh. Ultrasonicate (power 300 W, frequency 15 kHz) for 30 minutes, cool and weigh again, replenish the loss of solvent with methanol, mix well and filter. Transfer accurately 5 ml of the successive filtrate to a 20 ml volumetric flask, dilute to volume with methanol and mix well.

Procedure Inject accurately 10 μl of each of the reference solution and the test solution, respectively, into the column, and calculate the content.

It contains not less than 0.50 per cent of osthole ($C_{15}H_{16}O_3$), calculated with reference to the dried drug.

Processing Eliminate foreign matter, wash clean, soften thoroughly, cut into thin slices, and dry in the sun or at a lower temperature.

Action To relieve rheumatic conditions, and remove obstruction from the meridians and relieve pain.

Indications Rheumatic arthritis with pain in the lower back and knees; headache due to wind retention in the *shaoyin meridian*.

Usage and dosage 3-9 g.

Storage Preserve in a dry place, protected from mould and moth.

Radix Angelicae Sinensis (当归, Danggui)

Chinese Angelica

Chinese Angelica is the dried root of *Angelica sinensis* (Oliv.) Diels (Fam. Umbelliferae). The drug is collected in late autumn, removed from rootlet and soil, slightly dried and tied up in small bundles, placed on a shelf and smoke-dried.

Description Somewhat cylindrical, 3-5 or more branched at the lower part, 15-25 cm long. Externally yellowish-brown to brown, longitudinally wrinkled and transversely lenticel-like protruded. Root stocks (Guitou) 1.5-4 cm in diameter, annulated, apex obtuse and rounded, showing purple or yellowish-green remains of stems and leaf sheaths; main roots (Guishen) lumpy on the surface; branching roots (Guiwei) 0.3-1 cm in diameter, the upper portion thick and the lower portion thin, mostly twisted and exhibiting a few rootlet scars. Texture flexible, fracture yellowish-white or yellowish-brown, bark thick, showing some clefts and numerous brown dotted secretory cavities, wood paler in colour, cambium ring yellowish-brown. Odour, strongly aromatic; taste, sweet, pungent and slightly bitter.

It is not used medicinally if the roots become woody, withered and not oily, or greenish-brown on the fracture.

Identification (1) Transverse section: Cork cells in several layers. Phelloderm narrow, scattered with a few oil cavities. Phloem broad, more cleft, oil cavities and oil tubes subrounded, 25-160 μm in diameter, relatively large on the outer side, gradually becoming small inwards, surrounded by 6-9 secretory cells. Cambium in a ring. Xylem rays 3-5 rows of cells wide; vessels singly scattered, or 2-3-grouped, arranged radially; parenchymatous cells containing starch granules.

Powder: Yellowish-brown. Parenchymatous cells in phloem fusiform, walls slightly thickened, with very fine oblique crisscross striations, sometimes thin transverse septa visible. Scalariform and reticulate vessels frequent, up to 80 μm in diameter. Sometimes fragments of oil cavities visible.

(2) To 0.5 g of the powder add 20 ml of ether, ultrasonicate for 10 minutes and filter. Evaporate the filtrate to dryness and dissolve the residue in 1 ml of ethanol as the test solution. Prepare a solution of 0.5 g of Radix Angelicae Sinensis reference drug in the same manner as the reference drug solution. Carry out the method for thin layer chromatography (Appendix Ⅵ B), using silica gel G as the coating substance and a mixture of *n*-hexane and ethyl acetate (4 : 1) as the mobile phase. Apply separately to the plate 10 μl of the above two solutions. After developing and removal of the plate, dry in air. Examine under ultraviolet light at 365 nm. The fluorescent spots in the chromatogram obtained with the test solution correspond in position and colour to the spots obtained with the reference drug solution.

(3) To 3 g of the powder add 50 ml of 1% solution of sodium bicarbonate, ultrasonicate for 10 minutes, and centrifuge. Adjust the supernatant to pH 2-3 with dilute hydrochloric acid, extract by shaking with two 20-ml quantities of ether, combine the ether extracts and evaporate to dryness. Dissove the residue in 1 ml of methanol as the test solution. Dissolve a quantity of ferulic acid CRS in methanol to produce a solution containing 1 mg per ml as the reference solution. Carry out the method for thin layer chromatography (Appendix Ⅵ B), using silica gel G as the coating substance and a mixture of benzene, ethyl acetate and formic acid (4 : 1 : 0.1) as the mobile phase. Apply separately to the plate 10 μl of each of the above two solutions. After developing and removal of the plate, dry in air. Examine under ultraviolet light at 365 nm. The fluorescent spot in the chromatogram obtained with the test solution corresponds in position and colour to the spot obtained with the reference solution.

Water Carry out the method for determination of water (Appendix Ⅸ H, method 2), not more than 12.0 per cent.

Total ash Not more than 7.0 per cent (Appendix Ⅸ K).

Acid-insoluble ash Not more than 2.0 per cent (Appendix Ⅸ K).

Extractives Carry out the method for determination of ethanol-soluble extractives (Appendix Ⅹ A, the hot extraction method), using 70% ethanol as the solvent, not less than 45.0 per cent.

Assay Carry out the method for high performance liquid chromatography (Appendix Ⅵ D).

Chromatographic system and system suitability Use octadecylsilane bonded silica gel as the stationary phase and a mixture of acetonitrile and 0.085% solution of phosphoric acid (17 : 83) as the mobile phase. As detector a spectrophotometer set at 316 nm, maintain the column temperature at 35℃. The number of theoretical plates of the column is not less than 5000, calculated with the reference to the peak of ferulic acid.

Reference solution Weigh accurately 10 mg of ferulic acid CRS, dissolve in 70% methanol in a 50 ml brown volumetric

flask and dilute to volume. Measure accurately 3 ml in a 50 ml brown volumetric flask, dilute with 70% methanol to volume to produce a solution containing 12 μg per ml, and mix well.

Test solution Weigh accurately 0.2 g of the powder (through No. 3 sieve) to a stopper conical flask, accurately add 20 ml of 70% methanol, stopper tightly and weigh. Heat under reflux for 30 minutes, cool and weigh again, replenish the loss of solvent with 70% methanol, mix well and stand. Filter the supernatant through the millipore (0.45 μm), use the successive filtrate as the test solution.

Procedure Accurately inject 10 μl of each of the reference solution and the test solution, respectively, into the column, and calculate the content.
It contains not less than 0.050 per cent of ferulic acid ($C_{10}H_{10}O_4$), calculated with reference to the dried drug.

Processing *Radix Angelicae Sinensis* Eliminate foreign matter, wash clean, soften thoroughly, cut into thin slices, and dry in the sun or at a lower temperature.

Radix Angelicae Sinensis (*stir-baked with wine*) Stir-bake the slices of Radix Angelicae Sinensis as described under the method for stir-baking with wine (Appendix Ⅱ D) to dryness.
Subround or irregular slices, with brown rings in the cut surface. Texture flexible, deep yellow in colour, with burnt stains. Taste, sweet, slightly bitter; odour strongly aromatic and wine-like.

Action To enrich blood, activate blood circulation, regulate menstruation, relieve pain, and relax bowels.

Radix Angelicae Sinensis (*stir-baked with wine*) To activate blood circulation and stimulate menstruation.

Indications Anemia with dizziness and palpitation; menstrual disorders, amenorrhea, dysmenorrhea; constipation; rheumatic arthralgia; traumatic injuries; carbuncles, boils and sores.

Radix Angelicae Sinensis (*stir-baked with wine*) Amenorrhea, dysmenorrhea, rheumatic arthralgia, traumatic injuries.

Usage and dosage 6-12 g.

Storage Preserve in a cool and dry place, protected from moisture and moth.

Preparation Chinese Angelica Liquid Extract

Radix Ardisiae Crenatae (朱砂根, Zhushagen)

Coral Ardisia Root

Coral Ardisia Root is the dried root of *Ardisia crenata* Sims (Fam. Myrsinaceae). The drug is collected in autumn and winter, washed clean, and dried in the sun.

Description Cylindrical, slightly curved, 5-30 cm long, 0.2-1 cm in diameter, densely growing on the slightly swelled rhizomes. Externally greyish-brown or chocolate brown, longitudinal wrinkles visible, bearing transverse or annular cracked traces, bark easily separated from wood. Texture hard and fragile, easily broken, fracture uneven; bark thick, whitish or pink, scattered purplish-red dots in the outside, known as "vermilion dots" (zhushadian in Chinese); wood yellowish-white, uneven. Odour, slight; taste, slightly bitter, irritated to tongue.

Identification (1) Transverse section: Cork of 3-10 layers of subsquare cells, arranged in order, scattered stone cells in the inside. Cortex broad, consisting of 10 or more layers of subrounded parenchymatous cells, some containing reddish-brown masses. Endodermis distinct, with Casparian dots, cells containing reddish-brown contents. Pericyclic stone cells arranged in a interrupted ring. Phloem narrow. Fascicular cambium ring distinct. Xylem well developed, vessels mostly radially arranged in single rows, some containing yellowish-brown contents; rays 2-4 rows of cells wide. Parenchymatous cells containing starch granules.
Powder: Yellowish-brown. Cork cells subsquare, walls slightly thick, arranged in order. Bordered pitted vessels frequent, 24-95 μm in diameter. Xylem fibres slender, about 11 μm in diameter. Stone cells subsquare or irregular rectangular, 112-160 μm in long diameter, 44-110 μm in short diameter, pit canals distinct, some with striations, lumen relatively large. A great deal of brown masses visible. Starch granules abundant, subrounded, helmet-shaped or irregular, 4-36 μm in diameter, hilum distinct, dotted, clefted or V-shaped, striations indistinct; compound granules consisting of 2-4 component granules.
(2) To 0.2 g of the powder add 20 ml of methanol, ultrasonicate for 30 minutes, cool, filter, evaporate the filtrate to about 1 ml as the test solution. Dissolve bergenin CRS in methanol to produce a solution containing 0.5 mg per ml as the reference solution. Carry out the method for thin layer chromatography (Appendix Ⅵ B), using silica gel G as the coating substance and a mixture of chloroform, ethyl acetate and methanol (5∶4∶2) as the mobile phase. Apply separately to the plate 3 μl of each of the above two solutions. After developing and removal of the plate, dry in air, spray with a mixture of 1% ferric chloride solution and 1% potassium ferricyanide solution (1∶1). The spot in the chromatogram obtained with the test solution corresponds in position and colour to the spot in the chromatogram obtained with the reference solution.

Water Carry out the method for the determination of water (Appendix Ⅸ H, Method 1), not more than 13.0 per cent.

Total ash Not more than 6.0 per cent (Appendix Ⅸ K).

Acid-insoluble ash Not more than 2.0 per cent (Appendix Ⅸ K).

Assay Carry out the method for high performance liquid chromatography (Appendix Ⅵ D).

Chromatographic system and system suitability Use octadecylsilane bonded silica gel as the stationary phase and a mixture of methanol and water (25∶75) as the mobile phase. As detector a spectrophotometer set at 275 nm. The number of theoretical plates of the column is not less than 1500, calculated with the reference to the peak of bergenin.

Reference solution Dissolve a quantity of bergenin CRS, accurately weighed, in methanol to produce a solution containing 50 μg per ml as reference solution.

Test solution Weigh accurately 0.2 g of the powder to a stopper conical flask, accurately add 20 ml of methanol, stopper tightly and weigh. Ultrasonicate (power 200 W, frequency 40 kHz) for 40 minutes, cool, weigh again, replenish the loss of the solvent with methanol, mix well and filter. Measure accurately 5 ml of successive filtrate to a 10 ml volumetric flask, dilute to volume with methanol, and mix well.

Procedures Inject accurately 5 μl of each of the reference solution and the test solution respectively, into the column, determine and calculate the content.
It contains not less than 1.5 per cent of bergenin ($C_{14}H_{16}O_9$), calculated with reference to the dried drug.

Processing Eliminate foreign matter, wash, clean, soften thoroughly, cut into sections, and dry.

Action To clear *toxicity* and reduce swelling, promote blood circulation to kill pain, and expel *wind* and *dampness*.

Indications Swelling and painful throat, rheumatic arthralgia, and traumatic injuries.

Usage and dosage 3-9 g.

Storage Preserve in a dry place.

Radix Arnebiae (紫草, Zicao)

Arnebia Root

Arnebia Root is the dried root of *Arnebia euchroma* (Royle) Johnst. or *Arnebia guttata* Bunge (Fam. Boraginaceae). The drug is collected in spring or autumn, removed from soil, and dried.

Description *Root of Arnebia euchroma* Irregularly long-cylindrical, frequently twisted, 7-20 cm long, 1-2.5 cm in diameter. Externally purplish-red or purplish-brown; bark lax, striped-lamellar, usually marked with more than 10 layers overlapped, easily exfoliated. Apex sometimes bearing branched remains of a stem. Light, texture lax and soft, easily broken, fracture uneven, wood relatively small, yellowish-white or yellow. Odour, characteristic; taste, slightly bitter, and astringent.

Root of Arnebia guttata Conical or cylindrical, twisted, 6-20 cm long, 0.5-4 cm in diameter. Root stock slightly stout, apex bearing one or more remains of a stem, covered with short and stiff hairs. Externally purplish-red or deep purple, bark slightly thin, usually marked with several layers overlapped, easily exfoliated. Texture hard and fragile, easily broken, fracture even, bark purplish-red; wood relatively small, yellowish-white. Odour, characteristic; taste, astringent.

Identification (1) Place 0.5 g of the powder in a test tube, heat at the bottom, a red gas is produced, and reddish-brown oil drops are condensed on the wall of the test tube.
(2) To 0.5 g of the powder add 20 ml of petroleum ether (60-90℃), ultrasonicate for 20 minutes and filter. Concentrate the filtrate to about 1 ml as the test solution. Prepare a solution of 0.5 g of Radix Arnebiae reference drug in the same manner as the reference drug solution. Carry out the method for thin layer chromatography (Appendix Ⅵ B), using silica gel G as the coating substance and a mixture of cyclohexane, toluene, ethyl acetate and formic acid (5∶5∶0.5∶0.1) as the mobile phase. Apply separately to the plate 4 μl of each of the above two solutions. After developing and removal of the plate, dry in air. The purple spots in the chromatogram obtained with the test solution correspond in position and colour to the spots obtained with the reference drug solution; and the colour of spots turn to blue after spraying with a 10% solution of potassium hydroxide in methanol.

Water Carry out the method for determination of water (Appendix Ⅸ H, method 1), not more than 15.0 per cent.

Assay ***Total pigments of hydroxynaphthaquinone*** Weigh accurately 0.5 g of the powder (through No. 3 sieve), previously dried at 50℃ for 3 hours, to a 100 ml volumetric flask, add ethanol to volume, shake constantly for 4 hours, filter, measure accurately 5 ml of the successive filtrate to a 25 ml volumetric flask, dilute with ethanol to volume and mix well. Carry out the method for ultraviolet spectrophotometry and colourimetry (Appendix Ⅴ A), measure the absorbance at 516 nm, calculate the content of shikonin ($C_{16}H_{16}O_5$), taking 242 as the value of A (1%, 1 cm).
It contains not less than 0.80 per cent of total pigments of hydroxynaphthaquinone, calculated as shikonin ($C_{16}H_{16}O_5$).

Alkannin Carry out the method for high performance liquid chromatography (Appendix Ⅵ D).

Chromatographic system and system suitability Use octadecylsilane bonded silica gel as the stationary phase and a mixture of acetonitrile, water and formic acid (700∶300∶0.5) as the mobile phase. As detector a spectrophotometer set at 275 nm. The number of theoretical plates of the column is not less than 2000, calculated with the reference to the peak of β,β′-dimethylacrylalkanin.

Reference solution Weigh accurately a quantity of β,β′-dimethylacrylalkanin CRS, dissolve in ethanol to produce a solution containing 0.1 mg per ml.

Test solution Weigh accurately 0.5 g of the powder (through No. 4 sieve) to a stopper conical flask, add accurately 25 ml of petroleum ether (60-90℃), and weigh. Ultrasonicate (power 250 W, frequency 33 kHz) for 30 minutes, cool and weigh again, replenish the loss of solvent with petroleum ether (60-90℃), mix well and filter. Measure accurately 10 ml of the successive filtrate, evaporate to dryness, dissolve the residue with the mobile phase and transfer to a 10 ml volumetric flask, dilute to volume with the mobile phase and mix well.

Procedure Inject accurately 10 μl of each of the reference solution and the test solution, respectively, into the column, and calculate the content.
It contains not less than 0.30 per cent of β,β′-dimethylacrylalkanin ($C_{16}H_{16}O_5$), calculated with reference to the dried drug.

Processing *Root of Arnebia euchroma* Eliminate foreign matter, cut into thick slices or sections.

Root of Arnebia guttata Eliminate foreign matter, wash clean, soften thoroughly, cut into thin slices and dry.

Root of Arnebia euchroma (*sliced*) Occurring in irregular cylindrical sections or slat-shaped slices, 1-2.5 cm in diameter, purplish-red or purplish-brown. Bark dark purple. Wood in cylindrical sections relatively small, yellowish-white or yellow.

Root of Arnebia guttata (*sliced*) Occurring in irregular cylindrical sections or slate-shaped slices, someone has short hard hairs, 0.5-4 cm in diameter, purplish-red or purplish-black. Bark dark purple. Wood is relatively small, yellowish white or yellow.
Carry out the method of determination of total pigments of hydroxynaphthaquinone as described under Assay, it contains not less than 0.80 per cent of total pigments of hydroxynaphthaquinone, calculated as shikonin ($C_{16}H_{16}O_5$).
Carry out the method for determination of β,β′-dimethylacrylalkanin as described under Assay, it contains not less than 0.30 per cent of β,β′-dimethylacrylalkanin ($C_{16}H_{16}O_5$).

Action To remove *heat* from blood, promote blood circulation, counteract *toxicity*, and facilitate eruptions.

Indications Purpura dark in colour due to exuberant *toxic-heat* in blood; measles with inadequate eruptions; sores; eczema; scalds and burns.

Usage and dosage 5-9 g; appropriate quantity is stewed into soft extract or soaked in vegetable oil and applied topically.

Storage Preserve in a dry place.

Radix Asparagi
(天冬, Tiandong)

Cochinchinese Asparagus Root

Cochinchinese Asparagus Root is the dried root tuber of *Asparagus cochinchinensis* (Lour.) Merr. (Fam. Liliaceae). The drug is collected in autumn and winter, washed clean, removed from stem base and rootlet, boiled or steamed until the centre of the drug is devoid of white core, peeled while hot, washed clean, and then dried.

Description Long fusiform, somewhat curved, 5-18 cm long, 0.5-2 cm in diameter. Externally yellowish-white to yellowish-brown, translucent, smooth or with deep and shallow longitudinal wrinkles, patches of the outer peel in greyish-brown colour occasionally found. Texture hard or tough and sleek, mucilaginous, fracture horny, stele yellowish-white. Odour, slight; taste, sweet and slightly bitter.

Identification Transverse section: Sometimes with remains of velamen. Cortex broad, with stone cells on the outer part, scattered or arranged in an interrupted ring, stone cells pale yellowish-brown, elongated-rectangular, long-elliptical or subrounded, 32-110 μm in diameter, walls thickened, with very fine and dense pits and pit-canals; mucilage cells scattered, raphides of calcium oxalate occurring in elliptical mucilage cells, 40-99 μm long. Endodermis distinct. Phloem strands and xylem strands 31-135, respectively, arranged alternatively, a few vessels developing towards the pith. Pith cells also containing raphides.

Water Not more than 16.0 per cent (Appendix Ⅸ H, method 1).

Total ash Not more than 5.0 per cent (Appendix Ⅸ K).

Acid-insoluble ash Not more than 1.0 per cent (Appendix Ⅸ K).

Extractives Carry out the hot extraction method described under the determination of ethanol-soluble extractives (Appendix Ⅹ A), using dilute ethanol as the solvent. Not less than 80.0 per cent.

Processing Eliminate foreign matter, wash clean rapidly, cut into thin slices, and dry.

Action To replenish *yin*, promote body fluid secretion and moisten the *lung*.

Indications Dryness of the *lung* marked by dry cough, or paroxysmal cough with sticky sputum, dry throat, thirst, and constipation.

Usage and dosage 6-12 g.

Storage Preserve in a ventilated dry place, protected from mould and moth.

Radix Astragali
(黄芪, Huangqi)

Milkvetch Root

Milkvetch Root is the dried root of *Astragalus membranaceus* (Fisch.) Bge. var. *mongholicus* (Bge.) Hsiao or *Astragalus membranaceus* (Fisch.) Bge. (Fam. Leguminosae). The drug is collected in spring or autumn, removed from rootlet and root stock, dried in the sun.

Description Cylindrical, some branched, upper part relatively thick, 30-90 cm long, 1-3.5 cm in diameter. Externally pale brownish-yellow or pale brown, with irregular, longitudinal wrinkles or furrows. Texture hard and tenacious, uneasily broken, fracture highly fibrous and starchy, bark yellowish-white, wood pale yellow, with radiate striations and fissures, the centre part of old root occasionally rotten-wood-shaped, blackish-brown or hollowed. Odour, weak; taste, slightly sweet and slightly bean-like on chewing.

Identification (1) Transverse section: Cork consisting of many rows of cells. Phelloderm of 3-5 rows of collenchymatous cells. Outer part of phloem rays often curved and fissured; fibres in bundles, walls thickened and lignified or slightly lignified, arranged alternately with sieve tube groups; stone cells sometimes visible near phelloderm. Cambium in a ring. Xylem vessels scattered singly or 2-3 aggregated in groups; wood fibres existing among vessels; sometimes stone cells visible in rays, singly or 2-4 in groups. Parenchymatous cells containing starch granules.
Powder: Yellowish-white. Fibres in bundles or scattered, 8-30 μm in diameter, thick-walled, with longitudinal fissures on the surface, the primary walls often separated from the secondary walls, both ends often broken to tassel-like, or slightly truncated. Bordered-pitted vessels colourless or orange, bordered pits arranged closely. Stone cells occasionally visible, rounded, oblong or irregular, slightly thick-walled.
(2) To 3 g of the powder add 20 ml of methanol and heat under reflux on a water bath for 1 hour and filter. Apply the filtrate to a prepared neutral aluminium oxide column (100-120 mesh, 5 g, 10-15 mm in inner diameter) and elute with 100 ml of 40% methanol, collect the eluate and evaporate it on a water bath to dryness. Dissolve the residue in 30 ml of water and extract by shaking with two 20-ml quantities of *n*-butanol saturated with water, combine the *n*-butanol solutions and wash with two 20-ml quantities of water. Discard the water solution and evaporate the *n*-butanol solution to dryness on a water bath. Dissolve the residue in 0.5 ml of methanol as the test solution. Dissolve astragaloside Ⅳ CRS in methanol to produce a solution containing 1 mg per ml as the reference solution. Carry out the method for thin layer chromatography (Appendix Ⅵ B) using silica gel G as the coating substance and the lower layer of a mixture of chloroform, methanol and water (13∶7∶2) as the mobile phase. Apply separately to the plate 2 μl of each of the two solutions. After developing and removal of the plate, dry in air, spray with 10% solution of sulfuric acid in ethanol, and heat at 105℃ to the spots distinct. A brown spot in the chromatogram obtained with the test solution corresponds in position and colour to the spot in the chromatogram obtained with the reference solution. Examine under ultraviolet light at 365 nm, the same orange-yellow fluorescent spots are shown in both chromatogams.
(3) To 2 g of the powder, add 30 ml of ethanol, heat under reflux for 20 minutes, filter and evaporate the filtrate to dryness. Dissolve the residue in 15 ml of 0.3% solution of sodium hydroxide and filter. Adjust the filtrate to pH 5-6 with dilute hydrochloric acid, extract with 15 ml of ethyl acetate by shaking, separate the ethyl acetate solution and filter through a filter paper covered with a quantity of anhydrous sodium sulfate. Evaporate the filtrate to dryness and dissolve the residue in 1 ml of ethyl acetate as the test

solution. Prepare a solution of Radix Astragali reference drug in the same manner as the reference drug solution. Carry out the method for thin layer chromatography (Appendix Ⅵ B), using silica gel G as the coating substance and a mixture of chloroform and methanol (10∶1) as the mobile phase. Apply separately to the plate 10 μl of each of the above two solutions. After developing and removal of the plate, dry in air, expose to ammonia vapour and examine under ultraviolet light at 365 nm. The main fluorescent spots in the chromatogram obtained with the test solution correspond in position and colour to the spots obtained with the reference drug solution.

Total ash Not more than 5.0 per cent (Appendix Ⅸ K).

Acid-insoluble ash Not more than 1.0 per cent (Appendix Ⅸ K).

Heavy metals and harmful elements Carry out the methods for determinations of lead, cadmium, arsenic, mercury and copper (Appendix Ⅸ B, atomic absorption spectrophotometry, or inductively coupled plasma mass spectrometry), not more than 5 ppm of lead, 0.3 ppm of cadmium, 2 ppm of arsenic, 0.2 ppm of mercury and 20 ppm of copper.

Residual organochlorine pesticides Carry out the method for determination of organochlorine pesticides residue (Appendix Ⅸ Q), hexachlorocyclohexane (total BHC) is not more than 0.2 ppm, chlorophenothane (total DDT) is not more than 0.2 ppm, pentachloride nitrobenzene (PCNB) is not more than 0.1 ppm.

Extractives Carry out the cold extraction method as described under the determination of water-soluble extractives (Appendix Ⅹ A), not less than 17.0 per cent.

Assay Carry out the method for high performance liquid chromatography (Appendix Ⅵ D).

Chromatographic system and system suitability Use octadecylsilane bonded silica gel as the stationary phase and a mixture of acetonitrile and water (32∶68) as the mobile phase. Using an evaporative light scattering detector. The number of theoretical plates of the column is not less than 4000, calculated with the reference to the peak of astragaloside Ⅳ.

Reference solution Weigh accurately a quantity of astragaloside Ⅳ CRS, dissolve in methanol to produce a solution containing 0.5 mg per ml.

Test solution Weigh accurately 4 g of the powder to a Soxhlet's extractor, add 40 ml of methanol, macerate overnight, add again an appropriate quantity of methanol, heat under reflux on a water bath for 4 hours, concentrate the extracts to dryness. Add 10 ml of water and slightly heat to dissolve the residue, extract by shaking with four 40-ml quantities of *n*-butanol saturated with water, combine the extracts and wash with two 40-ml quantities of ammonia TS. Discard the ammonia solutions and evaporate the *n*-butanol extracts to dryness, dissolve the residue in 5 ml of water and cool. Apply it to a column (1.5 cm in inner diameter, 12 cm in length) packed with D101 macroporous resin, elute with 50 ml of water, 30 ml of 40% ethanol, 80 ml of 70% ethanol successively, discard the water and 40% ethanol eluates, collect the 70% ethanol eluates and evaporate to dryness. Dissolve the residue in methanol, transfer to a 5 ml volumetric flask, dilute with methanol to volume and mix well.

Procedure Inject accurately 10 μl, 20 μl of the reference solution and 20 μl of the test solution, respectively, into the column, and calculate the content, using a calibration equation of logarithm alteration of two external standards. It contains not less than 0.040 per cent of astragaloside Ⅳ ($C_{41}H_6O_{14}$), calculated with reference to the dried drug.

Processing Eliminate foreign matter, grade according to size, wash clean, soften thoroughly, cut into thick slices and dry.

Action To reinforce *qi* and strengthen the superficial resistance, induce urination and promote drainage of pus and growth of new tissue.

Indications Deficiency of *qi* with lack of strength, anorexia and loose stools, sinking of *spleen-qi* manifested by chronic diarrhea, prolapse of the rectum, hemafacia and abnormal uterine bleeding; spontaneous sweating due to weakened superficial resistance; edema due to deficiency of *qi*; abscesses difficult to burst or heal; anemia; wasting-thirst caused by internal heat; albuminuria in chronic nephritis; diabetes.

Usage and dosage 9-30 g.

Storage Preserve in a ventilated dry place, protected from moisture and moth.

Radix Astragali Praeparata cum Melle (炙黄芪, Zhihuangqi)

Prepared Milkvetch Root

Prepared Milkvetch Root is the processed Radix Astragali.

Procedure Stir-bake the slices of Radix Astragali as described under the method for stir-baking with honey (Appendix Ⅱ D) until no more sticky to fingers.

Description Rounded or elliptical slices, 0.8-3.5 cm in diameter, 0.1-0.4 cm in thickness. Externally pale brownish-yellow or pale brown, slightly lustrous, wrinkled and furrowed longitudinally. Cut surface pale yellow in bark and yellow in wood, striated radiately and fissured, sometimes the central part rotten-wood-shaped, blackish-brown or hollowed. Odour, honeyed-fragrant; taste, sweet, slightly sticky and bean-like on chewing.

Identification Carry out the method as described under the test (2) of Identification for Radix Astragali, it shows the same result.

Total ash Not more than 4.0 per cent (Appendix Ⅸ K).

Acid-insoluble ash Not more than 1.0 per cent (Appendix Ⅸ K).

Assay Weigh accurately 4 g of the powder, carry out the method as described under Assay for Radix Astragali. It contains not less than 0.030 per cent of astragaloside Ⅳ ($C_{41}H_{68}O_{14}$), calculated with reference to the dried drug.

Action To reinforce *qi* and invigorate the function of the spleen.

Indications Deficiency of *qi* with lack of strength, anorexia and loose stools.

Usage and dosage As described under Radix Astragali.

Storage As described under Radix Astragali.

Radix Aucklandiae
(木香, Muxiang)

Common Aucklandia Root

Common Aucklandia Root is the dried root of *Aucklandia lappa* Decne. (Fam. Compositae). The drug is collected in winter or spring, removed from soil and rootlet, cut into section, and the large one further longitudinally cut into pieces, dried, and removed from the rough outer bark by dashing.

Description Cylindrical or semicylindrical, 5-10 cm long, 0.5-5 cm in diameter. Externally yellowish-brown to greyish-brown, with distinct wrinkles, longitudinal furrows and lateral root scars. Texture hard, uneasily broken, fracture greyish-brown to dark brown, the outer layer greyish-yellow or brownish-yellow, cambium ring brown, having radial lines and scattered brown dotted oil cavities. Odour, characteristic and aromatic; taste, slightly bitter.

Identification (1) Powder: Yellowish-green. Inulin more frequent, with radial striations. Xylem fibres mostly in bundles, long fusiform, 16-24 μm in diameter, pit apertures horizontal-slited, crisscross or V-shaped. Reticulated vessels more frequent, bordered pitted vessels visible, 30-90 μm in diameter. Fragments of oil cavities visible, containing yellow or brown contents.

(2) To 0.5 g of the powder add 10 ml of chloroform and ultrasonicate for 30 minutes, filter, use the filtrate as the test solution. Dissolve dehydrocostuslactone CRS and costunolide CRS separately in chloroform to produce two solutions, each containing 0.5 mg per ml as the reference solutions. Carry out the method for thin layer chromatography (Appendix Ⅵ B), using silica gel G mixed with sodium carboxymethylcellulose as the coating substance and a mixture of chloroform and cyclohexane (5∶1) as the mobile phase. Apply separately 5 μl of each of the above three solutions to the plate. After developing and removal of the plate, dry it in air, spray with a 1% solution of vanillin in sulfuric acid and heat to the spots clear. The spots in the chromatogram obtained with the test solution correspond in position and colour to the spots in the chromatogram obtained with the reference solutions.

Total ash Not more than 4.0 per cent (Appendix Ⅸ K).

Assay Carry out the method for high performance liquid chromatography (Appendix Ⅵ D).

Chromatographic system and system suitability Use octadecylsilane bonded silica gel as the stationary phase and a mixture of methanol and water (65∶35) as the mobile phase. As detector a spectrophotometer set at 225 nm. The number of theoretical plates of the column is not less than 3000, calculated with the reference to the peak of costunolide.

Reference solution Weigh accurately a quantity of costunolide CRS and dehydrocostuslactone CRS, add methanol to produce a mixture containing 0.1 mg of each per ml as the reference solution.

Test solution Weigh accurately 0.3 g of the powder (through No. 4 sieve) to a stoppered conical flask, add accurately 50 ml of methanol, tightly stopper and weigh. Macerate overnight, ultrasonicate (power, 250 W; frequency, 50 kHz) for 30 minutes, cool and weigh again, replenish the loss of solvent with methanol, mix well and filter.

Procedure Inject accurately 10 μl of each of the reference solution and the test solution, respectively, into the column, and calculate the content.

It contains not less than 1.8 per cent of the total amount of costunolide ($C_{15}H_{20}O_2$) and dehydrocostuslactone ($C_{15}H_{18}O_2$), calculated with reference to the dried drug.

Processing *Radix Aucklandiae* Eliminate foreign matter, wash clean, soak briefly, soften thoroughly, cut into thick slices, and dry in the shade.

Occurring in subrounded thick slices, 15-30 mm in diameter. Externally greyish-brown or brownish-yellow, the centre marked with chrysanthemum-flower-like radial lines and dark brown or greyish-brown annulations at intervals; oil dots (oil cavities) brown and scattered throughout; the peripheral outer layer yellowish-brown to greyish-brown, wrinkled longitudinally. Texture hard. Odour, characteristic aromatic; taste, bitter.

Radix Aucklandiae (*roasted*) Spread undried Radix Aucklandiae on paper made of straw and pile up consecutively in style of covering one layer of the drug with one layer of paper in a wired shallow basket, roast on a coke stove or in a drying shed until the volatile oil is absorbed by paper, and take out.

Action To relieve pain by promoting the flow of *qi*, and to improve digestion by reinforcing the spleen function.

Radix Aucklandiae (*roasted*) To check diarrhea.

Indications Distending pain in the chest and epigastria; tenesmus in dysentery; indigestion with anorexia.

Radix Aucklandiae (*roasted*) Diarrhea with abdominal pain.

Usage and dosage 1.5-6 g.

Storage Preserve in a dry place, protected from moisture.

Radix Bupleuri
(柴胡, Chaihu)

Chinese Thorowax Root

Chinese Thorowax Root is the dried root of *Bupleurum chinense* DC. or *Bupleurum scorzonerifolium Willd.* (Fam. Umbelliferae). According to the difference of the origin and description, the former is known as "Beichaihu" (Northern Chinese Thorowax Root), and the later is known as "Nanchaihu" (Southern Chinese Thorowax Root). The drug is collected in spring or autumn, removed from the aerial part and soil, and dried.

Description *Beichaihu* Cylindrical or elongated conical, 6-15 cm long, 0.3-0.8 cm in diameter. Root stock expanded, apex remained with 3-15 stem-bases or short fibrous leaf-bases, branched at the lower part. Externally blackish-brown or light brown, with longitudinal wrinkles, rootlet scars and lenticel-like protrudings. Texture hard and tenacious, uneasily broken, fracture laminated-fibrous, bark light brown, wood yellowish-white. Odour, slightly aromatic; taste, slightly bitter.

Nanchaihu Relatively thin, conical. Apex with numerous hairy fibres from withered leaves, usually not branched or slightly branched at the lower part. Externally reddish-brown or blackish-brown, with dense and transverse annulations near the root stock. Texture slightly soft, easily broken, fracture slightly even, non-fibrous. Odour, rancid.

Identification To 0.5 g of the powder, add 20 ml of methanol, ultrasonicate for 10 minutes and filter. Concentrate the filtrate to about 5 ml as the test solution. Prepare a solution of 0.5 g of Radix Bupleuri reference drug in the same manner as the reference drug solution. Dissolve saikosaponin a CRS and saikosaponin d CRS in ethanol to produce a mixture containing 0.5 mg of each per ml as the reference solution. Carry out the method for thin layer chromatography (Appendix Ⅵ B), using silica gel G as the coating substance and a mixture of ethyl acetate, ethanol and water (8∶2∶1) as the mobile phase. Apply separately to the plate 5 μl of each of the above three solutions. After developing and removal of the plate, dry in air, spray with a 2% solution of *p*-dimethylaminobenzaldehyde in 40% solution of sulfuric acid, heat at 60℃ to the spots clear. Examine in daylight and under ultraviolet light at 365 nm. The spots and the fluorescent spots in the chromatogram obtained with the test solution correspond in position and colour to the spots and the fluorescent spots obtained with the reference drug solution and the reference solution.

Total ash Not more than 8.0 per cent (Appendix Ⅸ K).

Extractives Carry out the hot extraction method described under the determination of ethanol-soluble extractive (Appendix Ⅹ A), using ethanol as solvent, not less than 11.0 per cent.

Processing *Radix Bupleuri* Remove from foreign matter and remains of stems, wash clean, soften thoroughly, cut into thick slices, and dry.

Radix Bupleuri (*processed with vinegar*) Stir-bake the slices of Radix Bupleuri as described under the method for stir-baking with vinegar (Appendix Ⅱ D) to dryness.

Action To release both exterior and interior, soothe the liver, and elevate *yang*.

Indications Common cold with fever; alternate chills and fever such as malaria; distending pain in the chest and hypochondriac regions; menstrual disorders; prolapse of the uterus, prolapse of the rectum.

Usage and dosage 3-9 g.

Precaution The dried rhizome of *Bupleurum longiradiatum* Turcz., covered with numerous annular nodes externally, is poisonous and can not be used as Radix Bupleuri.

Storage Preserve in a ventilated dry place, protected from moth.

Radix Changii (明党参, Mingdangshen)

Medicinal Changium Root

Medicinal Changium Root is the dried root of *Changium smyrnioides* Wolff (Fam. Umbelliferae). The drug is collected in April and May, removed from rootlet, washed clean, treated with boiling water until the cut surface is devoid of a white core, then taken out to scrape off the outer bark, and dried after rinsing.

Description Slenderly cylindrical, long fusiform or irregularly stripe-shaped, 6-20 cm long, 0.5-2 cm in diameter. Externally yellowish-white or brownish, smooth or with longitudinal furrows and rootlet scars, some showing reddish-brown mottles. Texture hard and fragile, fracture horny, bark relatively thin, yellowish-white, sometimes easily separated from the whitish wood. Odour, slight; taste, weak.

Identification To 1 g of the powder add 20 ml of dilute ethanol, ultrasonicate for 20 minutes, filter, and evaporate the filtrate to dryness. Dissolve the residue in 1 ml of acidic dilute ethanol (adjust to pH 2-3 with dilute hydrochloric acid) as the test solution. Prepare a solution of 1 g of Radix Changii reference drug in the same manner as the reference drug solution. Carry out the method for thin layer chromatography (Appendix Ⅵ B), using silica gel G as the coating substance and a mixture of *n*-butanol, glacial acetic acid and water (19∶5∶5) as the mobile phase. Apply separately to the plate 5 μl of each of the two solutions. After developing for twice, ascending firstly to 5 cm and secondly to 10 cm, removal of the plate, dry in a current of hot air, spray with ninhydrin TS, and heat to visualize clearly. The spots in the chromatogram obtained with the test solution correspond in position and colour to the spots in the chromatogram obtained with the reference drug solution.

Extractive Carry out the cold maceration method under the determination of water-soluble extractives (Appendix Ⅹ A), not less than 20.0 per cent.

Processing Wash clean, soften thoroughly, cut into thick slices, and dry.

Action To moisten the lung and resolve *phlegm*, nourish *yin* and regulate the function of the stomach, subdue hyperactivity of the liver, and counteract *toxicity*.

Indications Cough caused by *heat* in the lung; vomiting, regurgitation, anorexia and dryness of the mouth; bloodshot eyes and vertigo; boils and sores.

Usage and dosage 6-12 g.

Storage Preserve in a ventilated dry place, protected from moisture and moth.

Radix Codonopsis (党参, Dangshen)

Tangshen

Tangshen is the dried root of *Codonopsis pilosula* (Franch.) Nannf., *Codonopsis pilosula* Nannf. var. *modesta* (Nannf.) L. T. Shen or *Codonopsis tangshen* Oliv. (Fam. Campanulaceae). The drug is collected in autumn, washed clean, and dried in the sun.

Description *Root of Codonopsis pilosula* Long cylindrical, slightly curved, 10-35 cm long, 0.4-2 cm in diameter. Externally yellowish-brown to greyish-brown, with numerous warty prominent stem scars and buds on the root stock, and the apex of each stem scar sunkenly dotted; dense transverse annulations occurring below the root stock, gradually sparse downwards, some up to half length of the root while the transverse annulations rare or absent in some cultivars; whole root showing longitudinal wrinkles and scattered transverse lenticel-like protrudings, frequently with blackish-brown gelatinous substances at the fractured area of the rootlet. Texture slightly hard or tenacious, fracture somewhat even, cleft or striated radially, bark pale yellowish-white to pale brown, wood pale yellow. Odour, characteristic and aromatic; taste, sweetish.

Root of Codonopsis pilosula var. modesta 10-35 cm long, 0.5-2.5 cm in diameter. Externally yellowish-white to pale yellow, dense transverse annulations occurring below the

root stock, frequently up to over half length of the root. Fracture more cleft, bark greyish-white to pale brown.

Root of Codonopsis tangshen 10-45 cm long, 0.5-2 cm in diameter. Externally greyish-yellow to yellowish-brown, with distinctly longitudinal wrinkles. Texture slightly soft and campact, fracture less cleft, bark yellowish-white.

Identification (1) Transverse section: Cork of several up to over ten rows of cells, stone cells present at the outer side, single or grouped. Phelloderm narrow. Phloem broad, often with cracks at the outer side, and with pale yellow laticiferous tube groups scattered throughout and frequently alternated with sieve tube groups. Cambium in a ring. Xylem vessels singly scattered or aggregated in groups, arranged radially. Parenchymatous cells containing inulin.

(2) To 1 g of the powder add 25 ml of methanol, ultrasonicate for 30 minutes, filter and evaporate the filtrate to dryness. Dissolve the residue in 2 ml of water and apply to a cartridge containing about 500 mg of a suitable octadecylsilyl silica gel for chromatography, washed previously with 10 ml of methanol followed by 10 ml of 20% solution of methanol, elute with 5 ml of 20% methanol, followed by 5 ml of methanol. Collect the methanol eluate and concentrate to about 1 ml as the test solution. Dissolve a quantity of lobetyolin CRS in methanol to produce a solution containing 1 mg per ml as the reference solution. Carry out the method for thin layer chromatography (Appendix Ⅵ B), using silica gel G as the coating substance and a mixture of *n*-butanol, glacial acetic acid and water (7∶1∶0.5) as the mobile phase. Apply separately to the plate 6 μl of each of the test solution and the reference drug solution. After developing and removal of the plate, dry in air, spray with a 10% solution of sulfuric acid in ethanol, heat at 105℃ for 5 minutes. Examine under ultraviolet light at 365 nm. The fluorescent spots in the chromatogram obtained with the test solution correspond in position and colour to the spots obtained with the reference drug solution.

Extractives Carry out the hot extraction method as described under the determination of ethanol-soluble extractive (Appendix Ⅹ A), using 45% ethanol as solvent, not less than 55.0 per cent.

Processing Eliminate foreign matter, wash clean, soften thoroughly, cut into thick slices, and dry.

Action To reinforce *qi* and invigorate the function of the spleen and the lung.

Indications Hypofunction of the spleen and the lung manifested by shortness of breath, cough, palpitation, anorexia, loose stools; wasting-thirst caused by internal heat.

Usage and dosage 9-30 g.

Precaution Incompatible with Rhizoma et Radix Veratri.

Storage Preserve in a ventilated dry place, protected from moth.

Radix Curcumae (郁金, Yujin)

Turmeric Root Tuber

Turmeric Root Tuber is the dried root tuber of *Curcuma wenyujin* Y. H. Chen et C. Ling, *Curcuma longa* L., *Curcuma kwangsiensis* S. G. Lee et C. F. Liang, or *Curcuma phaeocaulis* Val. (Fam. Zingiberaceae). The drugs derived from the former two are known as "Wenyujin" and "Huangsiyujin", respectively, and the drugs derived from the others are known as "Guiyujin" or "Lüsiyujin", respectively, according to different appearance. The drug is collected in winter when stem and leaves wither, removed from soil and rootlet, steamed or boiled thoroughly, and dried.

Description *Wenyujin* Oblong or ovoid, slightly compressed or curved, the two ends tapering, 3.5-7 cm long, 1.2-2.5 cm in diameter. Externally pale brown or greyish-brown, with irregular longitudinal wrinkles, the raised longitudinal wrinkles pale in colour. Texture campact, fracture greyish-brown and horny. Endodermis ring distinct. Odour, slightly aromatic; taste, slightly bitter.

Huangsiyujin Fusiform, sometimes slender at one end, 2.5-4.5 cm long, 1-1.5 cm in diameter. Externally brownish-grey or greyish-yellow, with fine wrinkles. Fracture orange, but edges brownish-yellow to brownish-red. Odour, aromatic; taste, pungent.

Guiyujin Long conical or oblong, 2-6.5 cm long, 1-1.8 cm in diameter. Externally with sparse and shallow wrinkles or relatively coarse reticulate wrinkles. Odour, slight; taste, slightly pungent, bitter.

Lüsiyujin Long ellipsoid, rather stout, 1.5-3.5 cm long, 1-1.2 cm in diameter. Odour, slight; taste weak.

Identification Transverse section:

Wen Yujin Epidermal cells sometimes remaining, the outer walls slightly thickened. Velamen narrow, composed of 4-8 layers of cells with slightly sinuous and thin walls, regularly arranged. Cortex 1/2 as wide as the diameter of the root, oil cells poorly visible, endodermis distinct. In stele, phloem bundles and xylem bundles 40-55, respectively, arranged alternatively, Vessels 2-4 in a xylem bundle and xylem fibres slightly lignified, vessels polygonal, thin-walled. 20-90 μm in diameter. Gelatinized strach granules in parenchymatous cells visible.

Huangsiyujin The walls of the inner most layer of velamen cells thickened. Sometimes xylem vessels and fibres arranged in a continuous ring, oil cells numerous, pigment cells scattered throughout parenchyma.

Guiyujin The walls of velamen cells occasionally thickened, the inner side of velamen showing 1-2 rows of sclerenchymatous cells arranged in a ring, with distinct striations. Vessels subrounded, up to 160 μm in diameter.

Lüsiyujin Cortex at the outside of stele frequently exhibiting pigment cells. Phloem bundles shrivelled, xylem bundles, 64-72, vessels flattened.

Water Carry out the determination of water (Appendix Ⅸ H, method 2), not more than 15.0 per cent.

Total ash Not more than 9.0 per cent (Appendix Ⅸ K).

Processing Wash clean, soften thoroughly, cut into thin slices, and dry; or wash clean, dry, and then break to pieces.

Action To promote the flow of *qi*, eliminate *blood stagnation*, clear the heart, remove depression by regulating *qi*, and promote bile flow to relieve jaundice.

Indications Amenorrhea, dysmenorrhea, distending or pricking pain in the chest and abdomen; impairment of consciousness in febrile diseases, epilepsy, mania; jaundice with dark urine.

Usage and dosage 3-9 g.

Storage Preserve in a dry place, protected from moth.

Radix Cyathulae (川牛膝, Chuanniuxi)

Medicinal Cyathula Root

Medicinal Cyathula Root is the dried root of *Cyathula officinalis* Kuan (Fam. Amaranthaceae). The drug is collected in autumn and winter, removed from root stock, rootlet and soil, baked or sun-dried to half-dryness, pilled up to be softened, and then baked or sunned to be dried completely.

Description Subcylindrical, somewhat twisted, slightly tapering downward or less-branched, 30-60 cm long, 0.5-3 cm in diameter. Externally yellowish-brown, with longitudinal wrinkles, rootlet scars and numerous transverse lenticel-like protrusions. Texture tenacious, uneasily broken, fracture pale yellow or brownish-yellow, showing dotted vascular bundles arranged in several concentric circles. Odour, slight; taste sweet.

Identification Transverse section: Cork consisting of several layers of cells. Phelloderm narrow. Vascular cylinder large, tertiary vascular bundles collateral, interruptedly arranged in 4-11 whorls, intrafascicular cambium at the inner side visible; vessels singly scattered in xylem, lignified, arranged radially; xylary fibres rather developed, sometimes tangentially elongated or arranged in an interrupted ring, secondary vascular system usually separated into 2-9 strands at the central, sometimes sparsely scattered vessels visible in the centre of root. Parenchymatous cells containing sand crystals and prisms of calcium oxalate.
Powder: Brown. Sand crystals and prisms of calcium oxalate scattered or filled in parenchymatous cells. Bordered pitted vessels 10-80 μm in diameter, pits rounded or elongated transversely, alternative closely arranged, some vessel elements fusiform at the ends. Fibres slat-shaped, curved, tapering towards the end, 8-25 μm in diameter, walls 3-5 μm thick, pits simple oblique or V-shaped, sometimes showing bordered pits, pit apertures crisscross, pit-canals distinct, dense or sparse.

Water Carry out the method for the determination of water (Appendix Ⅸ H, Method 1), not more than 16.0 per cent.

Total ash Not more than 8.0 per cent (Appendix Ⅸ K), using the granules of the diameter less than 3 mm.

Acid-insoluble ash Not more than 1.5 per cent (Appendix Ⅸ K), using the granules of the diameter less than 3 mm.

Extractives Carry out the cold extraction method as described under the determination of water-soluble extractives (Appendix Ⅹ A), using the granules of the diameter less than 3 mm. Not less than 65.0 per cent.

Processing *Radix Cyathulae* Eliminate foreign matter and root stock, wash clean, soften thoroughly, cut into thin slices, and dry.
In rounded slices, 0.1-0.2 cm thick, 0.5-3 cm in diameter. Externally greyish-brown, cut surfaces pale yellow or brownish-yellow. Numerous yellow dotted vascular bundles visible.

Radix Cyathulae (*stir-baked with wine*) Stir-bake slices of Radix Cyathulae as described under the method for stir-baking with wine (Appendix Ⅱ D) to dryness.

Action To eliminate blood stasis and stimulate menstruation, ease tension of joints, induce urination and relieve stranguria.

Indications Amenorrhea with mass formation in the lower abdomen; placenta retention after childbirth, arthralgia, weakness or contracture of the legs; hematuria; blood stranguria.

Usage and dosage 4.5-9 g.

Precaution Contraindicated in pregnancy.

Storage Preserve in a cool and dry place, protected from moisture.

Radix Dichroae (常山, Changshan)

Antifeverile Dichroa Root

Antifeverile Dichroa Root is the dried root of *Dichroa febrifuga* Lour. (Fam. Saxifragaceae). The drug is collected in autumn, removed from rootlet, washed clean, and dried in the sun.

Description Cylindrical, often twisted or branched, 9-15 cm long, 0.5-2 cm in diameter. Externally brownish-yellow, with fine longitudinal striations, the outer bark easily exfoliated, exposing pale yellow wood. Texture hard, uneasily broken, dusting on breaking; transversely cut surface yellowish-white, rays whitish, arranged radiately. Odour, slight; taste, bitter.

Identification (1) Transverse section: Cork consisting of several layers of cells. Phelloderm narrow, a few cells containing resinous masses or raphides of calcium oxalate. Phloem narrow, raphides of calcium oxalate numerous. Cambium in an irregular, wavy ring. Xylem occupying the main part, completely lignified, rays varying in width; vessels polygonal, singly scattered or aggregated, some containing yellow tyloses. Parenchymatous cells containing starch granules.
(2) Heat under reflux 2 g of the powder with 10 ml of 70% ethanol for 15 minutes, allow to cool and filter. Evaporate the filtrate to dryness, add 2 ml of 1% hydrochloric acid solution to the residue, stir and filter. To the filtrate add 2 drops of potassium iodobismuthate TS, a brownish-red precipitate is produced.

Processing *Radix Dichroae* Eliminate foreign matter, grade according to size, soak in water, soften thoroughly, cut into thin slices, and dry in the sun.

Radix Dichroae (*stir-baking*) Stir-bake the slices of Radix Dichroae as described under the method for simple stir-baking (Appendix Ⅱ D) until the colour deepens.

Action To stop malaria, and eliminate phlegm.

Indication Malaria.

Usage and dosage 5-9 g.

Precaution Vomiting is it's side effect; overdosage should be avoided. Used with caution in pregnancy.

Storage Preserve in a ventilated and dry place.

Radix Dipsaci
(续断, Xuduan)

Himalayan Teasel Root

Himalayan Teasel Root is the dried root of *Dipsacus asperoides* C. Y. Cheng et T. M. Ai; (Fam. Dipsacaceae). The drug is collected in autumn, removed from the root stock and rootlet, baked to half-dryness, piled up until a green colour is developed inside, and then baked to dryness.

Description Cylindrical, somewhat flattened, some slightly curved, 5-15 cm long, 0.5-2 cm in diameter. Externally greyish-brown or yellowish-brown, with slightly twisted or obviously twisted longitudinal wrinkles and furrows, showing transversal lenticel-like cicatrices and sparse rootlet scars. Texture soft and hardened after long storage, easily broken, fracture uneven, bark dark green or brown, the outer part brown or pale brown; wood yellowish-brown, vessel bundles arranged radially. Odour, slightly aromatic; taste, bitter, slightly sweet, then astringent.

Identification (1) Transverse section: Cork consisting of several layers of cells. Phelloderm narrow. Groups of sieve tubes sparsely scattered in phloem. Cambium ring distinct or less distinct. Xylem ray broad, vessels dense near the cambium and lessened inward, often singly scattered or 2-4-grouped. Pith small, and mostly absent in small roots. Parenchymatous cells containing clusters of calcium oxalate. Powder: Yellowish-brown, clusters of calcium oxalate fairly abundant, 15-50 μm in diameter, scattered throughout or embedded in shrunken parenchymatous cells, sometimes several clusters arranged in a dense slat in shape. The walls of fusiform parenchymatous cells slightly thickened, with fine, oblique crisscross striations. Bordered pits and reticulated vessels up to 72 (-90) μm in diameter. Cork cells pale brown, subrectangular, subsquare polygonal or long-polygonal in surface view, with thin walls.

(2) Stir well 3 g of the powder with 4 ml of strong ammonia TS, stand for 1 hour, add 30 ml of chloroform and ultrasonicate for 30 minutes, filter. Extract the filtrate by shaking with 30 ml of hydrochloric acid solution (4→100) in portions, adjust the extract to pH 10 with strong ammonia TS and extract by shaking with 20 ml of chloroform in portions. Combine the chloroform extracts, concentrate to about 0.5 ml as the test solution. Prepare a solution of 3 g of Radix Dipsaci reference drug in the same manner as the reference drug solution. Carry out the method for thin layer chromatography (Appendix Ⅵ B), using silica gel G mixed with 2% sodium hydroxide solution as the coating substance and a mixture of benzene and dehydrated ethanol (9∶2) as the mobile phase. Apply separately to the plate 10 μl of each of the two solutions. After developing and removal of the plate, spray with dilute potassium iodobismuthate TS and then a 5% solution of sodium nitrite in 70% ethanol, stand for a moment. The spots in the chromatogram obtained with the test solution correspond in position and colour to the spots in the chromatogram obtained with the reference drug solution.

(3) To 0.2 g of the powder add 15 ml of methanol, ultrasonicate for 30 minutes and filter. Evaporate the filtrate to dryness and dissolve the residue in 2 ml of methanol as the test solution. Dissolve a quantity of asperosaponin Ⅵ CRS in methanol to produce a solution containing 1 mg per ml as the reference solution. Carry out the method for thin layer chromatography (Appendix Ⅵ B), using silica gel G as the coating substance and the upper layer of a mixture of *n*-butanol, acetic acid and water (4∶1∶5) as the mobile phase. Apply separately to the plate 5 μl of each of the above two solutions. After developing and removal of the plate, dry in air, spray with a 10% solution of sulfuric acid in ethanol and heat to the spots clear. The spot in the chromatogram obtained with the test solution corresponds in position and colour to the spot obtained with the reference solution.

Water Carry out the method for determination of water (Appendix Ⅸ H, method 1), not more than 10.0 per cent.

Total ash Not more than 12.0 per cent (Appendix Ⅸ K).

Acid-insoluble ash Not more than 3.5 per cent (Appendix Ⅸ K).

Extractives Carry out the method for determination of water-soluble extractives (Appendix Ⅹ A, the hot extraction method), not less than 45.0 per cent.

Assay Carry out the method for high performance liquid chromatography (Appendix Ⅵ D).

Chromatographic system and system suitability Use octadecylsilane bonded silica gel as the stationary phase and a mixture of acetonitrile and water (30∶70) as the mobile phase. As detector a spectrophotometer set at 212 nm. The number of theoretical plates of the column is not less than 3000, calculated with the reference to the peak of asperosaponin Ⅵ.

Reference solution Weigh accurately a quantity of asperosaponin Ⅵ CRS, dissolve in methanol to produce a solution containing 1.5 mg per ml. Measure accurately 1 ml in a 10 ml volumetric flask, dilute with the mobile phase to volume and mix well.

Test solution Weigh accurately 0.5 g of the fine powder to a stopper conical flask, add accurately 25 ml of methanol, tightly stopper and weigh. Ultrasonicate (power, 100 W; frequency, 40 kHz) for 30 minutes, cool and weigh again, replenish the loss of solvent with methanol, mix well and filter. Measure accurately 5 ml of the successive filtrate in a 50 ml volumetric flask, dilute with the mobile phase to volume and mix well.

Procedure Inject accurately 20 μl of each of the reference solution and the test solution, respectively, into the column, and calculate the content.

It contains not less than 2.0 per cent of asperosaponin Ⅵ ($C_{47}H_{76}O_{18}$), calculated with reference to the dried drug.

Processing *Radix Dipsaci* (*sliced*) Wash clean, soften thoroughly, cut into thin slices, and dry.

Subrounded or elliptical. In cut surface, bark dark green or brown, wood greyish-yellow or yellowish-brown, showing radial lines consisting of vessel groups, the part of cambium exhibiting a dark-coloured ring. Carry out the method of Extractives mentioned above, containing not less than 45.0 per cent.

Radix Dipsaci (*processed with wine*) Stir-bake the slices of Radix Dipsaci as described under the method for stir-baking with wine (Appendix Ⅱ D) to be blackish.

Radix Dipsaci (*processed with salt-water*) Stir-bake the slices of Radix Dipsaci as described under the method for stir-baking with salt-water (Appendix Ⅱ D) to dryness.

Action To replenish the liver and the kidney, strengthen tendons and bones, heal bone fractures, and arrest abnormal uterine bleeding.

Indications Aching and weakness of the loins and knees; rheumatic arthralgia, abnormal uterine bleeding or menorrhalgia, uterine bleeding during pregnancy; traumatic injuries.

Radix Dipsaci (processed with wine): Usually used in impediment disease due to *wind-dampness*; traumatic injuries.
Radix Dipsaci (processed with salt-water): Usually used in aching and weakness of the lower back and knees.

Usage and dosage 9-15 g.

Storage Preserve in a dry place, protected from moth.

Radix Echinopsis (禹州漏芦, Yuzhou loulu)

Globethistle Root

Globethistle Root is the dried root of *Echinops latifolius* Tausch. or *Echinops grijisii* Hance (Fam. Compositae). The drug is collected in spring or autumn, removed from rootlet, and dried.

Description Subcylindrical, slightly tortuous, 10-25 cm long, 0.5-1.5 cm in diameter. Externally greyish-yellow or greyish-brown. wrinkled longitudinally, top with brown fibrous rigid hairs. Texture hard, uneasily broken, fracture showing brown in bark and yellow alternating with black radial striations in wood. Odour, slightly; taste, slightly astringent.

Identification Powder: Brownish-yellow. Phloem fibres in bundles, 20-42 μm in diameter, with thickened walls, the interspaces of cells containing brown resinous substances. Xylem fibres slender, acuminate at two ends, 12-30 μm in diameter, walls relatively thick. Bordered pitted vessels and reticulated vessels more frequent, 20-120 μm in diameter. Stone cells less frequent, subrounded, rectangular or square, 35-150 μm in diameter, markedly striated and pitted-canalled. The interspaces of stone cells containing brown resinous substances. Inulin visible.

Water Carry out the method for the determination of water (Appendix Ⅸ H, Method 1), not more than 13.0 per cent.

Total ash Not more than 10.0 per cent (Appendix Ⅸ K).

Acid-insoluble ash Not more than 4.5 per cent (Appendix Ⅸ K).

Extractives Carry out the method for determination of ethanol-soluble extractives (Appendix Ⅹ A, the hot extraction method), using dilute ethanol as solvent, not less than 13.0 per cent.

Processing Eliminate foreign matter, wash clean, soften thoroughly, cut into thick slices, and dry.

Action To remove *heat* and counteract *toxicity*, drain pus, stop bleeding, eliminate carbuncles, and promote lactation.

Indications Sores, carbuncles, mastitis, galactostasis, scrofula, pyogenic skin infection.

Usage and dosage 4.5-9 g.

Precaution Contraindicated in pregnancy.

Storage Preserve in a ventilated and dry place.

Radix et Rhizoma Asari (细辛, Xixin)

Manchurian Wildginger root

Manchurian Wildginger root is the dried root and rhizome of *Asarum heterotropoides* Fr. Schmidt var. *mandshuricum* (Maxim.) Kitag., *Asarum sieboldii* Miq. var. *seoulense* Nakai or *Asarum sieboldii* Miq. (Fam. Aristolochiaceae). The former two are known as "Liaoxixin". The drug is collected at fruiting stage in summer or at early autumn, removed from aerial part and soil, and dried in the shade.

Description *Radix of Asarum heterotropoides* var. *mandshuricum* Usually rolled into a mass. Rhizomes horizontal growing, irregular cylindrical, short-branched, 1-10 cm long, 2-4 mm in diameter; externally greyish-brown, rough, with ringed nodes, internodes 2-3 mm long, with dish-like stem scars at the top of branches. Roots slender, densely occuring at nodes, 10-20 cm long, 1 mm in diameter; externally greyish-yellow, smooth or longitudinally wrinkled, with fibrous roots or scars. Texture fragile, easily broken, fracture even, yellowish-white or white. Odour, pungent and aromatic; taste, pungent with tongue-numbing feeling.

Radix of Asarum sieboldii var. *seoulense* Rhizomes 1-5 mm in diameter, internodes 0.1-1 cm long.

Radix of Asarum sieboldii Rhizomes 5-20 cm long, 1-2 mm in diameter, internodes 0.2-1 cm long. Odour and taste relatively weak.

Total ash Not more than 12.0 per cent (Appendix Ⅸ K).

Assay Carry out the method for determination of volatile oil (Appendix Ⅹ D).
It contains not less than 2.0 per cent (ml/g) of volatile oil.

Processing Eliminate foreign matter, spray with water, soften briefly, cut into sections and dry in the shade.

Action To dispel *wind-cold*, relieve nasal obstruction, alleviate pain and remove retained morbid fluid.

Indications Common cold, headache, toothache; sinusitis with nasal obstruction; rheumatic arthralgia; cough and dyspnea due to retention of *phlegm* and morbid fluid.

Usage and dosage 1-3 g; appropriate quantity for external use.

Precaution Incompatible with Rhizoma et Radix Veratri.

Storage Preserve in a cool and dry place.

Radix et Rhizoma Asteris (紫菀, Ziwan)

Tatarian Aster Root

Tatarian Aster Root is the dried root and rhizome of *Aster tataricus* L. f. (Fam. Compositae). The drug is collected in spring or autumn, removed from the knotty rhizome and soil, braided and dried in the sun, or dried in the sun directly.

Description Rhizomes in irregular masses, varying in size,

apex with remains of stems and leaves. Texture slightly hard. Numerous rootlets fasciculated on rhizomes, 3-15 cm long, 0.1-0.3 cm in diameter, frequently braided; externally purplish-red or greyish-red, with longitudinal wrinkles. Texture flexible. Odour, slightly aromatic; taste, sweet and slightly bitter.

Identification (1) Transverse section of root: Epidermal cells frequently withered or sometimes sloughing off, containing purplish-red pigments. Hypodermal cells one layer, somewhat elongated tangentially, some containing purplish-red pigments, lateral and inner walls slightly thickened. Cortex broad, with intercellular spaces; secretory ducts 4-6, in the inner side of cortex; endodermis distinct. Stele small; xylem somewhat polygonal; each of phloem bundles alternating with the arc of xylem respectively; the centre usually showing a pith.
Rhizomes: Epidermis with glandular hairs; cortex scattered with stone cells and sclerenchymatous cells. Parenchymatous cells of root and rhizome containing inulin, sometimes containing clusters of calcium oxalate.
(2) To 1 g of the powder add 30 ml of petroleum ether (60-90℃), heat under reflux for 30 minutes, filter and concentrate the filtrate to 1 ml as the test solution. Dissolve a quantity of shionone CRS in chloroform to produce a solution containing 1 mg per ml as the reference solution. Carry out the method for thin layer chromatography (Appendix Ⅵ B), using silica gel G as the coating substance and a mixture of petroleum ether (60-90℃) and ethyl acetate (9:1) as the mobile phase. Apply separately 2 μl of each of the two solutions to the plate. After developing and removal of the plate, dry in air, spray with 2, 4-dinitrophenylhydrazine TS. A yellow spot in the chromatogram obtained with the test solution corresponds in position and colour to the spot in the chromatogram obtained with the reference solution.

Total ash Not more than 15.0 per cent (Appendix Ⅸ K).

Acid-insoluble ash Not more than 8.0 per cent (Appendix Ⅸ K)

Assay Carry out the method for high performance liquid chromatography (Appendix Ⅵ D).

Chromatographic system and system suitability Use octadecylsilane bonded silica gel as the stationary phase and a mixture of acetonitrile and water (96 : 4) as the mobile phase. As detector a spectrophotometer set at 200 nm, maintain the column temperature at 40℃. The number of theoretical plates of the column is not less than 3500, calculated with the reference to the peak of shionone.

Reference solution Weigh accurately a quantity of shionone CRS, dissolve in acetonitrile to produce a solution containing 0.1 mg per ml.

Test solution Weigh accurately 1 g of the powder (through No. 3 sieve) to a stopper conical flask, add accurately 20 ml of methanol and weigh. Warmly macerate for 1 hour at 40℃, ultrasonicate (power, 250 W; frequency, 40 kHz) for 15 minutes, take out, cool and weigh again, replenish the loss of solvent with methanol and mix well.

Procedure Inject accurately 20 μl of each of the reference solution and the test solution, respectively, into the column, and calculate the content.
It contains not less than 0.10 per cent of shionone ($C_{30}H_{50}O$), calculated with reference to the dried drug.

Processing *Radix Asteris* Eliminate foreign matter, wash clean, soften briefly, cut into thick slices, and dry.

Radix Asteris (stir-baked with honey) Stir-bake the slices of Radix Asteris as described under the method of stir-baking with honey (Appendix Ⅱ D) until no more sticky to fingers.

Action To eliminate phlegm and relieve cough.

Indications Acute or chronic cough and dyspuea with copious phlegm; hemoptysis in consumptive diseases.

Usage and dosage 5-9 g.

Storage Preserve in a cool and dry place, protected from moisture.

Radix et Rhizoma Clematidis (威灵仙, Weilingxian)

Chinese Clematis Root

Chinese Clematis Root is the dried root and rhizome of *Clematis chinensis* Osbeck, *Clematis hexapetala* Pall. or *Clematis manshurica* Rupr. (Fam. Ranunculaceae). The drug is collected in autumn, removed from soil, and dried in the sun.

Description *Root of Clematis chinensis* Rhizomes cylindrical, 1.5-10 cm long, 0.3-1.5 cm in diameter; externally pale brownish-yellow, crowned by remains of stems, the lower part bearing numerous rootlets. Texture relatively tough, fracture fibrous. Roots slender cylindrical, somewhat curved, 7-15 cm long, 1-3 mm in diameter; externally blackish-brown, longitudinally fine-wrinkled, sometimes showing yellowish-white wood when bark falling off. Texture hard and fragile, easily broken, fracture showing bark relatively broad, wood yellowish and slightly square, often with cleft between bark and wood. Odour, slight; taste, weak.

Root of Clematis hexapetala Rhizomes short cylindrical, 1-4 cm long, 0.5-1 cm in diameter. Roots 4-20 cm long, 1-2 mm in diameter; externally brown to brownish-black, wood in fracture subrounded. Taste, salty.

Root of Clematis manshurica Rhizomes cylindrical, 1-11 cm long, 0.5-2.5 cm in diameter. Roots relatively dense, 5-23 cm long, 1-4 mm in diameter; externally brownish-black, wood in fracture subrounded. Taste, pungent.

Identification (1) Transverse section of root:

Root of Clematis chinensis The outer walls of epidermal cells thickened, brownish-black. Cortex broad, consisting of parenchymatous cells, exodermis cells tangentially elongated; endodermis distinct. The outer side of phloem usually exhibiting fibre bundles and stone cells, fibres 18-43 μm in diameter. Cambium distinct. Xylem completely lignified. Parenchymatous cells containing starch granules.

Root of Clematis hexapetala Exodermis cells mostly radially elongated and the adjacent 1-2 rows of cells with slightly thickened walls; the outer side of phloem without fibre bundles and stone cells.

Root of Clematis manshurica Exodermis cells radially elongated, slightly tangentially elongated in the older roots; occasionally the outer side of phloem exhibiting fibre bundles and stone cells.
(2) To 1 g of the powder add 50 ml of ethanol, heat under reflux for 2 hours and filter. Concentrate the filtrate to about 20 ml, add 3 ml of hydrochloric acid and heat under reflux for 1 hour, add 10 ml of water, cool, extract by shaking with 25 ml of petroleum ether (60-90℃), and evaporate the petroleum ether extract to dryness. Dissolve the residue in 10 ml of dehydrated ethanol as the test solution. Dissolve a

quantity of oleanolic acid CRS in dehydrated ethanol to produce a solution containing 0.45 mg per ml as the reference solution. Carry out the method for thin layer chromatography (Appendix Ⅵ B), using silica gel G as the coating substance and a mixture of toluene, ethyl acetate and formic acid (20∶3∶0.2) as the mobile phase. Apply separately to the plate 3 μl of each of the above two solutions. After developing in a chamber previously saturated with the mobile phase for 30 minutes, removal of the plate, dry in air. Spray with a 10% solution of sulfuric acid in ethanol, heat at 105℃ to the spots clear. The spot in the chromatogram obtained with the test solution corresponds in position and colour to the spot obtained with the reference drug solution.

Water Carry out the method for determination of water (Appendix Ⅸ H, method 1), not more than 15.0 per cent.

Total ash Not more than 10.0 per cent (Appendix Ⅸ K).

Extractives Carry out the hot extraction method as described under the determination of ethanol-soluble extractives (Appendix Ⅹ A), using ethanol as the solvent, not less than 15.0 per cent.

Processing Eliminate foreign matter, wash clean, soften thoroughly, cut into sections, and dry.

Action To relieve rheumatic conditions, remove obstruction of collaterals, and alleviate pain.

Indications Rheumatic or rheumatoid arthralgia with numbness of limbs, muscle contracture and immobilized limbs; fish bone stuck in the throat.

Usage and dosage 6-9 g.

Storage Preserve in a dry place.

Radix et Rhizoma Cynanchi Atrati (白薇, Baiwei)

Blackend Swallowwort Root

Blackend Swallowwort Root is the dired root and rhizome of *Cynanchum atratum* Bge. or *Cynanchum versicolour* Bge. (Fam. Asclepiadaceae). The drug is collected in spring or autumn, washed clean, and dried.

Description Rhizomes thick and short, knotty, mostly tortuous. Some rounded stem scars occurring at the upper part and numerous slender roots fascicled bilaterally at the lower part. Roots 10-25 cm long, 1-2 mm in diameter. Externally brownish-yellow. Texture fragile, easily broken, fracture yellowish-white in bark and yellow in wood. Odour, slight; taste, slightly bitter.

Identification (1) Transverse section: Epidermal cells 1 layer, only some remains existed. Hypodermal cells 1 layer, slightly radial elongated; secretory cells rectangular or slightly bended, containing yellowish secretion. Cortex broad, endodermis distinct. Xylem cells all lignified, vessels mostly at laterals and fibres at centre. Parenchymatous cells containing clusters of calcium oxalate and numerous of starch granules.
Powder: Greyish-brown. Clusters of calcium oxalate relatively numerous, 7-45 μm in diameter. Secretory cells subrectangular, often containing yellowish secretion. Xylem fibres 160-480 μm long, 14-24 μm in diameter. Stone cells 40-50 μm long, 10-30 μm in diameter. Vessels mostly reticulated or bordered pitted thickened. Single starch granules 4-10 μm in diameter, hilum pointed, slit-shaped or three-forked; compound granules of 2-6 components.

(2) To 1 g of the powder add 30 ml of methanol, ultrasonicate for 20 minutes, cool, filter, and evaporate to dryness. Dissolve the residue in 1 ml of methanol as the test solution. Prepare a solution of 1 g of Radix Cynanchi Atrati reference drug in the same manner as the reference drug solution. Carry out the method for thin layer chromatography (Appendix Ⅵ B), using silica gel G as the coating substance and the upper layer of a mixture of *n*-butanol, ethyl acetate and water (4∶1∶5) as the mobile phase. Apply separately to the plate 2 μl of each of the two solutions. After developing and removal of the plate, dry in air. Spray with a solution of sulfuric acid in ethanol (1→10) and heat at 105℃ to the spots clear. The spots in the chromatogram obtained with the test solution correspond in position and colour to the spots in the chromatogram obtained with the reference drug solution.

Foreign matter Not more than 4.0 per cent (Appendix Ⅸ A).

Water Carry out the method for the determination of water (Appendix Ⅸ H, Method 1), not more than 11.0 per cent.

Total ash Not more than 13.0 per cent (Appendix Ⅸ K).

Acid-insoluble ash Not more than 4.0 per cent (Appendix Ⅸ K).

Extractives Carry out the hot extraction method as described under the determination of ethanol-soluble extractives (Appendix Ⅹ A), using dilute ethanol as the solvent, not less than 19.0 per cent.

Processing Eliminate foreign matter, wash clean, soften thoroughly, cut into sections, and dry.

Action To remove *heat* from blood, relieve dysuria, and counteract *toxicity* and cure sores.

Indications Fever due to invasion of *yin* system by *warm* pathogenic factors or *yin-deficiency*, bone-steaming, tidal fever, or fever due to *blood-deficiency* after childbirth, heat stranguria, blood stranguria, carbuncles and other subcutaneous pyogenic infections.

Usage and dosage 4.5-9 g.

Storage Preserve in a ventilated dry place.

Radix et Rhizoma Cynanchi Paniculati (徐长卿, Xuchangqing)

Paniculate Swallowwort Root

Paniculate Swallowwort Root is the dried root and rhizome of *Cynanchum paniculatum* (Bge.) Kitag. (Fam. Asclepiadaceae). The drug is collected in autumn, removed from foreign matter, and dried in the shade.

Description Rhizomes irrgeular cylindrical, knotty, 0.5-3.5 cm long, 2-4 mm in diamter. Sometimes apex with remains of stem, slenderly cylindrical, about 2 cm long, 1-2 mm in diameter, fracture hollowed; the nodes of rhizome surrounded by numerous roots. Roots slenderly cylindrical, curved, 10-16 cm long, 1-1.5 mm in diameter. Externally pale yellowish-white to pale brownish-yellow, or brown; with fine longitudinal wrinkles and fibrous roots. Texture fragile, easily broken, fracture starchy, bark whitish or yellowish-white, cambium ring pale brown, wood small. Odour, aromatic; taste, pungent and cool.

Identification To 1 g of the powder add 10 ml of ether, stopper tightly, shake for 10 minutes and filter. Evaporate

the filtrate to dryness, dissolve the residue in 1 ml of acetone as the test solution. Dissolve paeonol CRS in acetone to produce a solution containing 2 mg per ml as the reference solution. Carry out the method for thin layer chromatography (Appendix Ⅵ B), using silica gel G as the coating substance and a mixture of cyclohexane and ethyl acetate (3∶1) as the mobile phase. Apply separately to the plate 5 μl of the test solution and 10 μl of the reference solution. After developing and removal of the plate, dry in air, and spray with a 5% solution of ferric chloride in ethanol acidified with hydrochloric acid, heat to the spots distinct. The bluish-brown spot in the chromatogram obtained with the test solution corresponds in position and colour to the spot in the chromatogram obtained with the reference solution.

Water Carry out the method for determination of water (Appendix Ⅸ H, method 2), not more than 15.0 per cent.

Total ash Not more than 10.0 per cent (Appendix Ⅸ K).

Acid-insoluble ash Not more than 5.0 per cent (Appendix Ⅸ K).

Extractives Carry out the method for determination of ethanol-soluble extractives (Appendix Ⅹ A, the hot extraction method), using ethanol as the solvent, not less than 10.0 per cent.

Assay Carry out the method for high performance liquid chromatography (Appendix Ⅵ D).

Chromatographic system and system suitability Use octadecylsilane bonded silica gel as the stationary phase and a mixture of methanol and water (45∶55) as the mobile phase. As detector a spectrophotometer set at 274 nm. The number of theoretical plates of the column is not less than 3000, calculated with the reference to the peak of paeonol.

Reference solution Weigh accurately a quantity of paeonol CRS, dissolve in methanol to produce a solution containing 20 μg per ml.

Test solution Weigh accurately 0.5 g of the coarse powder to a stopper conical flask, accurately add 50 ml of methanol and weigh. Ultrasonicate (power, 250 W; frequency, 33 kHz) for 30 minutes, cool and weigh again, replenish the loss of solvent with methanol, mix well and filter. Measure accurately 1 ml of the successive filtrate to a 10 ml volumetric flask, dilute with methanol to volume, and mix well.

Procedure Accurately inject 10 μl of the reference solution and the test solution, respectively, into the column, and calculate the content.

It contains not less than 1.3 per cent of paeonol ($C_9H_{10}O_3$), calculated with reference to the dried drug.

Processing Eliminate foreign matter, wash clean rapidly, cut into sections, and dry in the shade.

Action To relieve rheumatic conditions, and arrest pain and itching.

Indications Rheumatic arthralgia, epigastric pain and distension, toothache, lower back pain, traumatic injuries; urticaria, eczema.

Usage and dosage 3-12 g, decocted for a short time only.

Storage Preserve in a cool and dry place.

Radix et Rhizoma Ephedrae (麻黄根, Mahuanggen)

Ephedra Root

Ephedra Root is the dried root and rhizome of *Ephedra sinica* Stapf or *Ephedra intermedia* Schrenk et C. A. Mey. (Fam. Ephedraceae). The drug is collected in the late autumn, removed from remains of stem, rootlet and soil, and dried in the sun.

Description Cylindrical, slightly curved, 8-25 cm long, 0.5-1.5 cm in diameter. Externally reddish-brown or greyish-brown, with longitudinal wrinkles and scars of rootlets. The outer bark rough, easily exfoliated. Rhizomes with nodes, internodes 0.7-2 cm long, externally with transversally elongated lenticel-like protrudings. Texture light, hard and fragile, fracture yellowish-white in bark, pale yellow to yellow in wood, showing radial rays, with a pith in the centre. Odour, slight; taste, slightly bitter.

Identification Transverse section of root: Cork consisting of about 10 or more layers of cells, with rhytidome outside. Phelloderm consisting of several layers of parenchymatous cells, containing sand crystals of calcium oxalate, scattering fibre bundles and stone cells. Phloem narrow. Cambium in a ring. Xylem well developed, consisting of vessels, tracheids and xylem fibres; rays broad, containing sand crystals of calcium oxalate. Sometimes pith with fibres; parenchymatous cells with pits. Rays of rhizome relatively narrow.

Powder: Brownish-red or brownish-yellow. Cork cells rectangular, brown, containing sand crystals of calcium oxalate. Most fibres scattered singly, 20-25 μm in diameter, walls thickened and lignified, with distinct oblique pits. Spiral and reticulated vessels 30-50 μm in diameter, the perforated plates of vessel members with numerous rounded pores. Sometimes stone cells visible, oblong, fibrous or branched, 20-50 μm in diameter, thick-walled. Parenchymatous cells in pith subsquare, subrectangular or subrounded, walls slightly thickened, with pits. Parenchymatous cells containing sand crystals of calcium oxalate.

Processing Eliminate foreign matter, wash clean, soften thoroughly, cut into thick slices, and dry.

Action To arrest perspiration.

Indications Spontaneous sweating, night sweating.

Usage and dosage 3-9 g; for external use, appropriate quantity is ground into powder and applied to the skin.

Storage Preserve in a dry place.

Radix et Rhizoma Gentianae (龙胆, Longdan)

Chinese Gentian

Chinese Gentian is the dried root and rhizome of *Gentiana manshurica* Kitag., *Gentiana scabra* Bge., *Gentiana triflora* Pall. or *Gentiana ringescens* Franch. (Fam. Gentianaceae). The former three are known as "Longdan" and the later is

known as "Jianlongdan". The drug is collected in spring and autumn, washed clean and dried.

Description *Longdan* Rhizomes irregularly lump-shaped, 1-3 cm long, 0.3-1 cm in diameter; externally dark greyish-brown or dark brown, the upper part with stem scars or remains of stem bases, surroundings and the lower part bearing numerous slender roots. Roots cylindrical, slightly twisted, 10-20 cm long, 2-5 mm in diameter; externally pale yellow or yellowish-brown, mostly the upper part exhibiting obvious transverse wrinkles, the lower part narrower and marked with longitudinal wrinkles and rootlet scars. Texture fragile, easily broken, fracture slightly even, bark yellowish-white or yellowish-brown, wood paler in colour and appearing dotted-ringed. Odour, slight; taste, rather bitter.

Jianlongdan Externally without transverse wrinkles, the outer layer membranaceous, easily falling off, wood yellowish-white, easily separated from bark.

Identification (1) Transverse section:

Longdan Epidermal cells sometimes found, the outer walls relatively thick. Cortex narrow; cells of exodermis subsquare, walls slightly thick, suberized; cells of endodermis elongated tangentially, each cell divided by longitudinal walls into several subsquare small cells. Phloem broad and cleft. Cambium less distinct. Vessels 3-10 grouped. Pith distinct. Parenchymatous cells containing minute needles of calcium oxalate.

Jianlongdan The tissues outside the endodermis mostly falling off. Vessels in xylem well developed and evenly and densely distributed. Pith absent.
Powder: Yellowish-brown.

Longdan Cells of exodermis spindle-shaped in surface view, each cell divided by transverse walls into several small rectangular cells. Cells of endodermis subrectangular in surface view, fairly large, periclinal walls showing minute transverse striations, each cell divided by longitudinal septa walls into several small polisade-like cells, mostly longitudinal septa beaded. Parenchymatous cells containing minute needle crystals of calcium oxalate. Reticulated and scalariform vessels up to about 45 μm in diameter.

Jianlongdan Exodermis absent. Cells of endodermis subsquare or subrectangular, transverse striations of the periclinal walls relatively thick and dense, some up to 3 μm thick, each cell divided into several small palisade-like cells, septa slightly thickened or beaded.
(2) Macerate 0.5 g of the powder in 5 ml of methanol for 4-5 hours, filter, concentrate the filtrate to about 2 ml and use it as the test solution. Dissolve gentiopicrin CRS in methanol to produce a solution containing 2 mg per ml as the reference solution. Carry out the method for thin layer chromatography (Appendix Ⅵ B), using silica gel GF_{254} as the coating substance and a mixture of ethyl acetate, methanol and water (20:2:1) as the mobile phase. Apply separately 5 μl of each of the above two solutions to the plate, develop twice in the mobile phase. After developing and removal of the plate, dry in air, examine under ultraviolet light at 254 nm. A spot in the chromatogram obtained with the test solution corresponds in position and colour to the spot in the chromatogram obtained with the reference solution.

Total ash Not more than 7 per cent (Appendix Ⅸ K).

Assay Carry out the method for high performance liquid chromatography (Appendix Ⅵ D).

Chromatographic system and system suitability Use octadecylsilane bonded silica gel as the stationary phase and a mixture of methanol and water (3:7) as the mobile phase. As detector a spectrophotometer set at 270 nm. The number of theoretical plates of the column is not less than 3000, calculated with the reference to the peak of gentiopicrin.

Internal standard solution Weigh accurately a quantity of caffeine CRS, add methanol to produce a solution containing 0.4 mg per ml.

Procedures Weigh accurately a quantity of gentiopicrin CRS, dissolve in methanol to produce a solution con-taining 1 mg per ml. Measure accurately 5 ml of the solution and the internal standard solution, respectively, and mix well. Accurately inject 10 μl of the mixture solution into column and record the chromatogram. Weigh accurately 0.5 g of the medium powder in a stopper conical flask, add accurately 10 ml of methanol and allow to stand for 12 hours, shake constantly. Measure accurately 2 ml of the supernatant to a 10 ml volumetric flask, add accurately 2 ml of the internal standard solution, dilute with methanol to volume, mix well. Accurately inject 10 μl into the column, calculated the content with corrected internal standard method according to the peak area.
It contains not less than 1.0 per cent of gentiopicrin ($C_{16}H_{20}O_9$).

Processing Eliminate foreign matter, wash clean, soften thoroughly, cut into sections, and dry.

Action To eliminate *damp-heat* and quench *fire* of the liver and gallbladder.

Indications Jaundice caused by *damp-heat*; swelling and itching of the vulva with leukorrhalgia; prolonged erection; eczema accompanied with itching; bloodshot eyes, poor hearing, pain in the costal regions and bitter taste in the mouth; convulsion.

Usage and dosage 3-6 g.

Storage Preserve in a dry place.

Radix et Rhizoma Ginseng (人参, Renshen)

Ginseng

Ginseng is the dried root of *Panax ginseng* C. A. Mey. (Fam. Araliaceae). The drug derived from the cultivated form is known as "Yuanshen" (garden ginseng) and the drug derived from the wild origin is known as "Shanshen" (wild ginseng). The drug is collected in autumn and washed clean. Sun-dried or bake-dried Yuanshen is known as "Shengshaishen" (sun-dried ginseng). Sun-dried Shanshen is known as "Shengshai-shanshen" (sun-dried wild ginseng).

Description Main roots fusiform or cylindrical, 3-15 cm long, 1-2 cm in diameter; externally greyish-yellow, the upper part or entire root exhibiting sparse, shallow, interrupted and coarse transverse-striations and distinct longitudinal wrinkles; the lower part bearing 2-3 branch roots and numerous slender rootlets with inconspicuous minute tubercles. Rhizomes (Lutou) 1-4 cm long, 0.3-1.5 cm in diameter, mostly constricted and curved, bearing adventitious roots (Ding) and showing sparse depressed-circular stem scars (Luwan). Texture relatively hard, fracture yellowish-white, starchy, cambium ring brownish-yellow, bark exhibiting yellow-brown dotted resin canals and radial clefts. Odour, characteristic; taste, slightly bitter and sweet.
Alternatively, main roots as long as or shorter than

rhizome, cylindrical, rhomboid or V-shaped, 1-6 cm long; externally greyish-yellow, longitudinally wrinkled, the upper or middle-lower part with annulations, branch roots mostly 2, rootlets less and slender, orderly arranged and showing some distinct warts. Rhizomes slender, a kew stout, the upper part exhibiting sparse or dense deep depressed stem scars, adventitious roots relatively thin, mostly reclinate.

Identification (1) Transverse section: Cork consisting of several rows of cells. Phelloderm narrow. Phloem showing clefts in the outer part, and parenchymatous cells densely arranged and scattered with resin canals containing yellow secretions in the inner part. Cambium in a ring. Xylem rays broad, vessels singly scattered or grouped, interruptedly arranged radially, occasionally accompanied by non-lignified fibres. Parenchymatous cells containing clusters of calcium oxalate.

Powder: Yellowish-white. Fragments of resin canals containing yellow masses of secretion. Clusters of calcium oxalate 20-68 μm in diameter, with acute angles. Cork cells subsquare or polygonal with sinuous walls. Reticulated and scalariform vessels 10-56 μm in diameter. Starch granules fairly abundant, simple granules subspheroidal, semi-circular or irregular poly-gonal, 4-20 μm in diameter, hilum pointed or slit-shaped; compound granules of 2-6 components.

(2) To 1 g of the powder add 40 ml of chloroform, heat under reflux on a water bath for 1 hour, discard the chloroform layer, evaporate the residue to dryness. Moisten the residue with 0.5 ml of water, add 10 ml of *n*-butanol saturated with water, ultrasonicate for 30 minutes. To the supernatant liquid add 3 volumes of ammonia TS, mix well, stand for demixing. Evaporate the supernatant liquid to dryness, dissolve the residue in 1 ml of methanol as the test solution. Prepare a solution of 1 g of Radix et Rhizoma Ginseng reference drug in the same manner as the reference drug solution. Dissolve ginsenosides Rb_1 CRS, Re CRS, Rf CRS and Rg_1 CRS in methanol to produce a mixture containing 2 mg of each per ml as the reference solution. Carry out the method for thin layer chromatography (Appendix Ⅵ B), using silica gel G as the coating substance (500 μm thick) and the lower layer of a mixture of chloroform, ethyl acetate, methanol and water (15∶40∶22∶10), standing below 10℃, as the mobile phase. Apply separately to the plate 1-2 μl of each of the above three solutions. After developing and removal of the plate, dry in air, spray with a 10% solution of sulfuric acid in ethanol, heat at 105℃ to visualize clearly. Examine in daylight and under ultraviolet light at 365 nm. The spots or fluorescent spots in the chromatogram obtained with the test solution correspond in position and colour to the spots or fluorescent spots in the chromatogram obtained with the reference drug solution and the reference solution.

Water Carry out the method for determination of water (Appendix Ⅸ H, method 1), not more than 12.0 per cent.

Total ash Not more than 5.0 per cent (Appendix Ⅸ K).

Acid-insoluble ash Not more than 1.0 per cent (Appendix Ⅸ K).

Assay Carry out the method for high performance liquid chromatography (Appendix Ⅵ D).

Chromatographic system and system suitability Use octadecylsilane bonded silica gel as the stationary phase, acetonitrile as the mobile phase A and water as the mobile phase B, elute in gradient as the following:

Time (min)	Mobile phase A (per cent v/v)	Mobile phase B (per cent v/v)
0-35	19	81
35-55	19→29	81→71
55-70	29	71
70-100	29→40	71→60

As detector a spectrophotometer set at 203 nm. The number of theoretical plates of the column is not less than 6000, calculated with the reference to the peak of ginsenoside Rg_1.

Reference solution Dissolve ginsenosides Rg_1 CRS, Re CRS, Rf CRS and Rb_1 CRS, accurately weighed, in methanol to produce a mixture containing 0.2 mg of each per ml as the reference solution.

Test solution Weigh accurately 1 g of the powder (through No. 4 sieve) to a Soxhlet's extractor, add 40 ml of chloroform, heat under reflux on a water bath for 3 hours, discard the chloroform solution, expel the solvent from the residue. Transfer it with the filter paper tube into a 100 ml conical flask. Accurately add 50 ml of *n*-butanol saturated with water, tightly stopper, allow to stand overnight, ultrasonicate (power, 250 W; frequency, 50 kHz) for 30 minutes and filter. Evaporate accurately 25 ml of the successive filtrate to dryness in an evaporating dish, dissolve the residue in methanol, transfer to a 5 ml volumetric flask, dilute with methanol to volume and mix well.

Procedure Inject accurately 10 μl of the reference solution and 10-20 μl of the test solution, respectively, into the column, and calculate the content.

It contains not less than 0.30 per cent of the total amount of gensenoside Rg_1 ($C_{42}H_{72}O_{14}$) and ginsenoside Re ($C_{48}H_{82}O_{18}$), and not less than 0.20 per cent of gensenoside Rb_1 ($C_{54}H_{92}O_{23}$), calculated with reference to the dried drug.

Processing Soften thoroughly, cut into thin slices, and dry, or pulverize or break to pieces before use.

Action To reinforce *qi*, rescue collapse and restore the normal pulse, to benefit the spleen and lung, promote the production of body fluids, and anchor the mind.

Indications Fainting in debilitated patients marked by cold limbs and faint pulse, hypofunction of the spleen with loss of appetite, cough and dyspnea due to hypofunction of the lung, thirst due to impairment of body fluids, wasting-thirst caused by internal *heat*, general weakness from chronic diseases, palpitation, insomnia, impotence or cold in the uterus; heart failure, cardiogenic shock.

Usage and dosage 3-9 g, decocted separately and taken after mixed in a decoction or 2 g, taken after ground into powder, twice a day.

Precaution Incompatible with Rhizoma et Radix Veratri.

Storage Preserve in a well closed container, stored in a cool and dry place, protected from moth.

Radix et Rhizoma Ginseng Rubra (红参, Hongshen)

Red Ginseng

Red Gingseng is the steamed and dried root of the cultivar of *Panax ginseng* C. A. Mey. (Fam. Araliaceae). The drug is collected in autumn, washed clean, steamed, and dried.

Description Main roots fusiform, cylindrical or flat squared

columnar, 3-10 cm long, 1-2 cm in diameter. Externally translucent, reddish-brown, occasionally exhibiting a few dark yellowish-brown patches, furrowed longitudinally, wrinkled and with rootlet scars; the upper part sometimes exhibiting interrupted indistinct annulations, the lower part bearing 2-3 twisted and intersected branch roots and curved rootlets or just showing remains of rootlets. Rhizomes 1-2 cm long, showing several depressed-circular stem scars (Luwan), some bearing 1-2 entire or broken adventitious roots (Ding). Texture hard and fragile, fracture even, horny. Odour delicate fragrant and characteristic; taste, sweet and slight bitter.

Identification (1) Carry out the method of test (1) for Identification in the monograph of Radix et Rhizoma Ginseng. It shows the same characteristics except the starch granule.

(2) Carry out the method of test (2) for Identification in the monograph of Radix Ginseng. It shows the same result.

Water Carry out the method for determination of water (Appendix Ⅸ H, method 1), not more than 12.0 per cent.

Assay Carry out the method for high performance liquid chromatography (Appendix Ⅵ D).

Chromatographic system and system suitability Use octadecylsilane bonded silica gel as the stationary phase, acetonitrile as the mobile phase A and water as the mobile phase B, elute in gradient as the following:

Time (min)	Mobile phase A (per cent v/v)	Mobile phase B (per cent v/v)
0-35	19	81
35-55	19→29	81→71
55-70	29	71
70-100	29→40	71→60

As detector a spectrophotometer set at 203 nm. The number of theoretical plates of the column is not less than 6000, calculated with the reference to the peak of ginsenoside Rg_1.

Reference solution Dissolve ginsenosides Rg_1, Re and Rb_1 CRS, accurately weighed, in methanol to produce a mixture containing 0.5, 0.3 and 0.5 mg of each per ml as the reference solution.

Test solution Weigh accurately 1 g of the powder (through No. 4 sieve) to a Soxhlet's extractor, add 40 ml of chloroform, heat under reflux on a water bath for 3 hours, discard the chloroform solution, expel the solvent from the residue. Transfer it with the filter paper tube to a stoppered conical flask, accurately add 50 ml of *n*-butanol saturated with water, tightly stopper, allow to stand overnight, ultrasonicate (power, 250 W; frequency, 50 kHz) for 30 minutes and filter. Evaporate accurately 25 ml of the successive filtrate to dryness in an evaporating dish, dissolve the residue in methanol, transfer to a 5 ml volumetric flask, dilute with methanol to volume and mix well.

Procedure Inject accurately 10 μl of the reference solution and 10-20 μl of the test solution, respectively, into the column, and calculate the content.

It contains not less than 0.25 per cent of the total amount of ginsenoside Rg_1 ($C_{42}H_{72}O_{14}$), ginsenoside Re ($C_{48}H_{82}O_{18}$), and not less than 0.20 per cent of ginsenoside Rb_1 ($C_{54}H_{92}O_{23}$), calculated with reference to the dried drug.

Processing Soften thoroughly, cut into thin slices, and dry. Break to pieces before use.

Action Replenish vital essence, promote blood circualtion and relieve collapse, reinforce *qi* and stop bleeding.

Indications Fainting in debilitated patients, cool limbs and weak pulse, abnormal uterine bleeding due to failure of *qi* to control blood, cardiac failure and cardiogenic shock.

Usage and dosage 3-9 g.

Precaution Incompatible with Rhizoma et Radix Veratri.

Storage Preserve in well closed containers, stored in a cool and dry place, protected from moth.

Radix et Rhizoma Glycyrrhizae (甘草, Gancao)

Liquorice Root

Liquorice Root is the dried root and rhizome of *Glycyrrhiza uralensis* Fisch., *Glycyrrhiza inflata* Bat. or *Glycyrrhiza glabra* L. (Fam. Leguminosae). The drug is collected in spring or autumn, removed from rootlet, and dried in the sun.

Description *Root of Glycyrrhiza uralensis* Roots cylindrical, 25-100 cm long, 0.6-3.5 cm in diameter. The outer bark loose or tight. Externally reddish-brown or greyish-brown, obviously longitudinally wrinkled, furrowed, lenticel-like protruded, and with sparse rootlet scars. Texture compact, fracture slightly fibrous, yellowish-white, starchy, cambium ring distinct, rays radiate, some with clefts. Rhizomes cylindrical, externally with bud scars, pith present in the centre of fracture. Odour, slight; taste, sweet and characteristic.

Root of Glycyrrhiza inflata Roots and rhizomes woody and stout, some branched, the outer bark rough, mostly greyish-brown. Texture compact, lignified fibres abundant, and less starchy. Rhizomes with more and large adventitious buds.

Root of Glycyrrhiza glabra Texture of root and rhizomes relatively compact, some branched, the outer bark not rough, mostly greyish-brown, lenticels small and indistinct.

Identification (1) Transverse section: Cork consisting of several layers of brown cells. Phelloderm relatively narrow. Phloem rays broad, mostly curved, frequently with clefts; most phloem fibres in bundles, unlignified or slightly lignified, surrounded by parenchymatous cells containing prisms of calcium oxalate; sieve tube tissue often pressed to be collapsed. Fascicular cambium distinct. Xylem rays 3-5 cells wide; vessels frequent, up to 160 μm in diameter; xylem fibres in boundles, surrounded by parenchymatous cells containing prisms of calcium oxalate. Roots without pith at the centre; rhizomes possessing pith at the centre.

Powder: Brownish-yellow. Fibres in bundles, 8-14 μm in diameter, thick-walled, slightly lignified, surrounded by parenchymatous cells containing prisms of calcium oxalate, forming crystal fibres. Prisms of calcium oxalate frequent. Bordered pitted vessels large, reticulated vessels rare. Cork cells reddish-brown, polygonal, slightly lignified.

(2) To 1 g of the powder, add 40 ml of ether, heat under reflux on a water bath for 1 hour, filter. Heat the residue under reflux in 30 ml of methanol on a water bath for 1 hour and filter. Evaporate the filtrate to dryness and dissolve the residue in 40 ml of water. Extract the aqueous solution with three 20-ml quantities of *n*-butanol. Combine the *n*-butanol solutions, wash with water for 3 times and evaporate on a water bath to dryness, dissolve the residue in 5 ml of methanol as the test solution. Prepare a solution of 1 g of Radix et Rhizoma Glycyrrhizae reference drug in the same

manner as the reference drug solution. Dissolve ammonium glycyrrhizinate CRS in methanol to produce a solution containing 2 mg per ml as the reference solution. Carry out the method for thin layer chromatography (Appendix Ⅵ B), using silica gel G mixed with 1% solution of sodium hydroxide as the coating substance and a mixture of ethyl acetate, formic acid, glacial acetic acid and water (15∶1∶1∶2) as the mobile phase. Apply separately to the plate 1-2 μl of each of the three solutions. After developing and removal of the plate, dry in air. Spray with a 10% solution of sulfuric acid in ethanol. Heat at 105℃ to visualize clearly, and examine under ultraviolet light at 365 nm. The fluorescent spots in the chromatogram obtained with test solution correspond in position and colour to the spots obtained with the reference drug solution; an orange fluorescent spot in the chromatogram obtained with the test solution corresponds in position and colour to the spot in the chromatogram obtained with the reference solution.

Water Carry out the method for Determination of water (Appendix Ⅸ H, method 1), not more than 12.0 per cent.

Total ash Not more than 7.0 per cent (Appendix Ⅸ K).

Acid-insoluble ash Not more than 2.0 per cent (Appendix Ⅸ K).

Heavy metals and harmful elements Carry out the methods, for determinations of lead, cadmium, arsenic, mercury and copper (Appendix Ⅸ B, atomic absorption spectrophotometry, or inductively coupled plasma mass spectrometry), not more than 5 ppm of lead, 0.3 ppm of cadmium, 2 ppm of arsenic, 0.2 ppm of mercury and 20 ppm of copper.

Residual organochlorine pesticides Carry out the method for determination of organochlorine pesticides residue (Appendix Ⅸ Q), hexachlorocyclohexane (total BHC) is not more than 0.2 ppm, chlorophenothane (total DDT) is not more than 0.2 ppm, pentachloride nitrobenzene (PCNB) is not more than 0.1 ppm.

Assay ***Glycyrrhizic acid*** Carry out the method for high performance liquid chromatography (Appendix Ⅵ D).

Chromatographic system and system suitability Use octadecylsilane bonded silica gel as the stationary phase and a mixture of methanol, 0.2 mol/L solution of ammonium acetate and glacial acetic acid (67∶33∶1) as the mobile phase. As detector a spectrophotometer set at 250 nm. The number of theoretical plates of the column is not less than 2000, calculated with the reference to the peak of ammonium glycyrrhizate.

Reference solution Weigh accurately 10 mg of ammonium glycyrrhizate CRS in a 50 ml volumetric flask, dissolve with the mobile phase and dilute to volume, mix well (0.2 mg per ml, 0.1959 mg calculated for glycyrrhizic acid).

Test solution Weigh accurately 0.3 g of the medium powder in a 50 ml volumetric flask, add 45 ml of the mobile phase and ultrasonicate for 30 minutes (power, 250 W; frequency, 20 kHz), take out and cool, dilute with the mobile phase to volume and mix well, filter, use the filtrate as the test solution.

Procedure Accurately inject 10 μl of each of the reference solution and the test solution, respectively, into the column, determine and calculate the content.
It contains not less than 2.0 per cent of glycyrrhizic acid ($C_{42}H_{62}O_{16}$), calculated with reference to the dried drug.

Glycyramarin Carry out the method for high performance liquid chromatography (Appendix Ⅵ D).

Chromatographic system and system suitability Use octadecylsilane bonded silica gel as the stationary phase and a mixture of acetonitrile and 0.5% solution of glacial acetic acid (1∶4) as the mobile phase. As detector a spectrophotometer set at 276 nm. The number of theoretical plates of the column is not less than 4000, calculated with the reference to the peak of glycyramarin.

Reference solution Weigh accurately a quantity of glycyramarin CRS, dissolve in methanol to produce a solution containing 20 μg per ml.

Test solution Weigh accurately 0.2 g of the powder (through No. 3 sieve) to a conical flask, accurately add 10 ml of 70% ethanol and weigh. Ultrasonicate (power, 300 W; frequency, 25 kHz) for 30 minutes, take out and weigh again, replenish the loss of weight with 70% ethanol and filter. Measure accurately 5 ml of the successive filtrate in a 100 ml volumetric flask, dilute to volume with 20% acetonitrile and mix well.

Procedure Inject accurately 20 μl of each of the reference solution and the test solution, respectivelty, into the column, and calculate the content.
It contains not less than 1.0 per cent of glycyramarin ($C_{21}H_{22}O_9$), calculated with reference to the dried drug.

Processing Eliminate foreign matter, wash clean, soften thoroughly, cut into thick slices, and dry.

Action To reinforce the function of the spleen and replenish *qi*, remove *heat* and counteract *toxicity*, dispel phlegm and relieve cough, alleviate spasmodic pain, and moderate drug actions.

Indications Hypofunction of the spleen and the stomach marked by lassitude and weakness; cardiac palpitation and shortness of breath; cough with much phlegm; spasmodic pain in the epigastrium, abdomen and limbs; carbuncles and sores, also used for reducing the toxic or drastic actions of other drugs.

Usage and dosage 1.5-9 g.

Precaution Incompatible with Radix Euphorbiae Pekinensis, Flos Genkwa and Radix Kansui.

Storage Preserve in a ventilated and dry place, protected from moth.

Preparation Liquorice Extract

Radix et Rhizoma Glycyrrhizae Praeparata cum Melle (炙甘草, Zhigancao)

Prepared Liauorice Root

The drug is the processed Radix Glycyrrhizae.

Procedure Stir-bake the slices of Radix Glycyrrhizae as described under the method for stir-baking with honey (Appendix Ⅱ D) until it becomes yellow to deep yellow and not sticky to the fingers, take out and cool in the air.

Description Occurring in subrounded or elliptical slices, externally reddish-brown or greyish-brown, slightly lustrous, cut surface yellow to deep yellow, cambium ring distinct, rays radiate. Texture slightly sticky. Odour, with agreeable burnt smelling; taste, sweet.

Identification Carry out the method as described under Identification test (2) in the monograph of Radix glycyrrhizae, it shows the same result.

Water Carry out the method for Determination of water

(Appendix Ⅸ H, method 1). Not more than 10.0 per cent.

Total ash Not more than 5.0 per cent (Appendix Ⅸ K).

Acid-insoluble ash Not more than 1.0 per cent (Appendix Ⅸ K).

Action To invigorate the function of *spleen* and stomach, to reinforce *qi* and promote blood circulation.

Indications Deficiency of *spleen* and stomach, lassitude, palpitation, arrhythmia.

Usage and dosage As described under Radix Glycyrrhizae.

Precaution As described under Radix Glycyrrhizae.

Storage As described under Radix Glycyrrhizae.

Radix et Rhizoma Nardostachyos (甘松, Gansong)

Nardostachys Root

Nardostachys Root is the dried root and rhizome of *Nardostachys chinensis* Batal. or *Nardostachys jatamansi* DC. (Fam. Valerianaceae). The drug is collected in spring and autumn, removed from soil and foreign matter, and dried in the sun or in the shade.

Description Subconical, mostly tortuous, 5-18 cm long. Rhizomes short and small, top with the remains of stem and leaves, long and narrow membranaceous-flaky or fibrous. Outer layer blackish-brown, inner layer brown or yellow. Root simple or multiple joined, branched or juxtaposed, 0.3-1 cm in diameter. Externally brown, shrunken, with rootlets. Texture lax and fragile, easily broken, fracture rough, bark dark brown, usually splintery, wood yellowish-white. Odour, characteristic; taste, bitter and pungent, with a cooling sensation.

Identification Powder: Dark brown. Stone cells subrounded or irregularly polygonal, occasionally long slat-shaped, single or grouped, 33-64 μm in diameter, 200 μm or more long, walls fairly thickened, colourless, lumen narrow. Scalariform or reticulated vessels 7-40 μm in diameter, small scalariform vessels in bundle, sometimes accompanied by slender xylary fibres. Cork cells mostly irregularly polygonal, walls dark brown, relatively thin, lumen containing yellow to brownish-yellow volatile oil. Fragments of residual basal leaves numerous, cells rectangular or elongated polygonal, yellowish to brown, 20-31 μm in diameter, 50-90 μm long, walls beaded and thickened. The cells of another fragments long slat-shaped, up to 200 μm long, sometimes walls beaded and thickened.

Assay Carry out the method for the determination of volatile oil (Appendix Ⅹ D).
It contains not less than 2.0 per cent (ml/g) of volatile oil.

Action To regulate the flow of *qi* and relieve pain, and to invigorate the spleen function.

Indications Epigastric and abdominal distension with anorexia and vomiting; external use for toothache and swollen feet.

Usage and dosage 3-6 g; for external use, appropriate quantity is made into infusion for gargle, or made into decoction for washing, or ground into powder for topical application.

Storage Preserve in a cool and dry place, protected from moisture and moth.

Radix et Rhizoma Notoginseng (三七, Sanqi)

Sanchi

Sanchi is the dried root of *Panax notoginseng* (Burk.) F. H. Chen (Fam. Araliaceae). The drug is collected before flowering in autumn, washed clean, graded into main root, branch root and rhizome, and dried. The branch root is known as "Jintiao" and rhizome is known as "Jiankou".

Description Main roots subconical or cylindrical, 1-6 cm long, 1-4 cm in diameter. Externally greyish-brown or greyish-yellow with interrupted longitudianl wrinkles and branch root scars. Stem scars at the apex surrounded by warty protrudings. Texture heavy and campact, fracture greyish-green, yellowish-green or greyish-white, wood slightly radially arranged. Odour, slight; taste, bitter but afterwards sweetish.

Jintiao Cylindrical or conical, 2-6 cm long, the upper end 0.8 cm in diameter, the lower end 0.3 cm in diameter.

Jiankou Irregularly shrunken lump-shaped or slat-shaped, externally with several conspicuous stem scars and annulations; fracture greyish-green or greyish-white in the centre and deep green or grey at the margin.

Identification (1) Powder: Greyish-yellow. Starch granules fairly abundant, simple granules spherical, semispherical or round-polygonal, 4-30 μm in diameter; compound granules of 2-10 or more components. Fragments of resin canals containing yellow secretion. Scalariform, reticulated and spiral vessels 15-55 μm in diameter. Clusters of calcium oxalate infrequent, 50-80 μm in diameter.
(2) To 0.5 g of the powder add 5 drops of water, stir well, add 5 ml of *n*-butanol saturated with water, stopper tightly, shake for about 10 minutes. Allow to stand for 2 hours, centrifuge. To the supernatant solution, add 3 volumes of water saturated with *n*-butanol, mix well and stand to demix (centrifuge if necessary). Evaporate the *n*-butanol solution to dryness in an evaporation dish. Dissolve the residue in 1 ml of methanol as test solution. Dissolve ginsenoside Rb_1 CRS, ginsenoside Re CRS, notoginsenoside R_1 CRS and ginsenoside Rg_1 CRS in methanol to produce a mixture containing 0.5 mg of each per ml as reference solution. Carry out the method for thin layer chromatography (Appendix Ⅵ B), using silica gel G as the coating substance and the lower layer of a mixture of chloroform, ethyl acetate, methanol and water (15 : 40 : 22 : 10), standed below 10℃, as the mobile phase. Apply separately to the plate 1 μl of each of the two solutions. After developing and removal of the plate, dry in air. Spray with a solution of sulfuric acid in ethanol (1→10) and heat at 105℃ to the spots clear. The spots in the chromatogram obtained with the test solution correspond in position and colour to the spots in the chromatogram obtained with the reference solution. Or examine under ultraviolet light at 365 nm, both chromatograms show the same fluorescent spots.

Water Carry out the method for determination of water (Appendix Ⅸ H, method 1), not more than 14.0 per cent.

Total ash Not more than 6.0 per cent (Appendix Ⅸ K).

Acid-insoluble ash Not more than 3.0 per cent (Appendix Ⅸ K).

Extractives Carry out the method for determination of ethanol-soluble extractives (Appendix Ⅹ A, the hot

extraction method), using methanol as the solvent, not less than 16.0 per cent.

Assay Carry out the method for high performance liquid chromatography (Appendix VI D).

Chromatographic system and system suitability Use octadecylsilane bonded silica gel as the stationary phase, acetonitrile as the mobile phase A and water as the mobile phase B, elute in gradient as the following:

Time (min)	Mobile phase A (per cent V/V)	Mobile phase B (per cent V/V)
0-12	19	81
12-60	19→36	81→64

As detector a spectrophotometer set at 203 nm. The number of theoretical plates of the column is not less than 4000, calculated with the reference to the peak of notoginsenoside R_1.

Reference solution Dissolve ginsenosides Rg_1, Rb_1 CRS and notoginsenoside R_1 CRS, accurately weighed, in methanol to produce a mixture containing 0.4, 0.4 and 0.1 mg of each per ml as the reference solution.

Test solution Weigh accurately 0.6 g of the powder (through No. 4 sieve), accurately add 50 ml of methanol, weigh and allow to stand overnight. Heat under reflux to slightly boil on a water bath at 80℃ for 2 hours, cool and weigh again, replenish the loss of solvent with methanol and mix well. Filter and use the successive filtrate as the test solution.

Procedure Inject accurately 10 μl of each of the reference solution and the test solution, respectively, into the column, and calculate the content.

It contains not less than 5.0 per cent of the total amount of ginsenoside Rg_1 ($C_{42}H_{72}O_{14}$), ginsenoside Rb_1 ($C_{54}H_{92}O_{23}$) and notoginsenoside R_1 ($C_{47}H_{80}O_{18}$), calculated with reference to the dried drug.

Processing *Powder of Radix Notoginseng* Wash Radix Notoginseng clean, dry, and pulverize to fine powder.

Action To eliminate blood stasis, arrest bleeding, cause subsidence of swelling and alleviate pain.

Indications Hemoptysis, hematemesis, epistaxis, hematochezia, abnormal uterine bleeding, traumatic bleeding; pricking pain in the chest and abdomen, traumatic swelling and pain.

Usage and dosage 3-9 g; ground into powder and taken with water, 1-3 g each time; appropriate quantity for external use.

Precaution Used with caution in pregnancy.

Storage Preserve in a cool and dry place, protected from moth.

Radix et Rhizoma Rhei (大黄, Dahuang)

Rhubarb

Rhubarb is the dried root and rhizome of *Rheum palmatum* L., *Rheum tanguticum* Maxim. ex Balf. or *Rheum officinale* Baill. (Fam. Polygonaceae). The drug is collected in late autumn when stem and leaves are withered or in next spring just before budding, removed from rootlet and the outer bark, cut into segment or section, either stringed together to be dried, or dried directly.

Description In subcylindrical, conical, ovoid or irregular pieces, 3-17 cm long, 3-10 cm in diameter. Externally yellowish-brown to reddish-brown when peeled, sometimes whitish reticulations and scattered star spots (abnormal vascular bundles) visible, occasionally with brownish-black patches of cork, mostly with a hole through which the string passed, and coarse wrinkles. Texture campact, sometimes rather loose and soft in the centre, fracture reddish-brown or yellowish-brown, granular. Pith of the rhizome broad, with star spots arranged in a ring or irregularly scattered. Wood of the root well developed, lined radially, cambium ring distinct, without star spots. Odour, delicately aromatic; taste bitter and slightly astringent, sticky and gritty on chewing.

Identification (1) Transverse section: Most cork and phelloderm of root removed. In phloem, sieve tube groups distinct, parenchyma well developed. Cambium in a ring. Xylem with relatively dense rays, 2-4 cells wide, containing brown masses; vessels unlignified, usually single or several grouped, sparsely arranged. Parenchymatous cells containing clusters of calcium oxalate and abundant starch granules.

Pith of rhizome broad, usually showing mucilage cavities, containing reddish-brown masses; abnormal vascular bundles scattered, cambium in a ring, xylem at the outside and phloem at the inside. Rays stellately radiated.

Powder: Yellowish-brown. Clusters of calcium oxalate 20-160 μm, sometimes up to 190 μm in diameter. Bordered-pitted, reticulated, spiral and annular vessels unlignified. Starch granules fairly abundant, single granules subspheroidal or polygonal, 3-45 μm in diameter, hilum stellate; compound granules consisting of 2-8 components.

(2) Sublime a small quantity of the powder, rhombic needles or feathery crystals are visible.

(3) Macerate 0.1 g of the powder in 20 ml of methanol for 1 hour, and filter. Evaporate 5 ml of the filtrate to dryness, dissolve the residue in 10 ml of water, add 1 ml of hydrochloric acid, heat under reflux on a water bath for 30 minutes and cool immediately. Extract by shaking with two 20-ml quantities of ether, combine the ether extracts, evaporate to dryness and dissolve the residue in 1 ml of chloroform as the test solution. Prepare a solution of Radix et Rhizoma Rhei reference drug in the same manner as the reference drug solution. Dissolve rhein CRS in methanol to produce a solution containing 1 mg per ml as the reference solution. Carry out the method for thin layer chromatography (Appendix VI B), using silica gel-H mixed with sodium carboxymethylcellulose as the coating substance and the upper layer of a mixture of petroleum ether (30-60℃), ethyl formate and formic acid (15:5:1) as the mobile phase. Apply separately to the plate 4 μl of each of the above three solutions. After developing and removal of the plate, dry in air, and examine under ultraviolet light at 365 nm. The five orange fluorescent spots in the chromatogram obtained with the test solution correspond in position and colour to the spots in the chromatogram obtained with the reference drug solution; the orange fluorescent spot in the chromatogram obtained with the test solution corresponds in position and colour to the spot in the chromatogram obtained with the reference solution. The spot becomes red on exposure to ammonia vapour.

Rhaponticin Macerate warmly 0.2 g of the powder in 2 ml of methanol for 10 minutes, and cool. Apply 10 μl of the supernatant to a piece of filter paper, and develop using 45%

ethanol as mobile phase. After developing and removal of the paper, dry in air and allow to stand for 10 minutes. Examine under ultraviolet light at 365 nm; a persistent bright violet fluorescence is not shown.

Loss on drying When dried at 105℃ for 6 hours, loses not more than 15.0 per cent of its weight (Appendix Ⅸ G).

Total ash Not more than 10.0 per cent (Appendix Ⅸ K).

Acid-insoluble ash Not more than 0.8 per cent (Appendix Ⅸ K).

Extractives Carry out the method for determination of water-soluble extractives (Appendix X A, the hot extraction method), not less than 25.0 per cent.

Assay Carry out the method for high performance liquid chromatography (Appendix Ⅵ D).

Chromatographic system and system suitability Use octadecylsilane bonded silica gel as the stationary phase and a mixture of methanol and 0.1% phosphoric acid (85∶15) as the mobile phase. As detector a spectrophotometer set at 254 nm. The number of theoretical plates of the column is not less than 3000, calculated with the reference to the peak of emodin.

Reference solution Weigh accurately a quantity of aloe-emodin CRS, rhein CRS, emodin CRS, chrysophanol CRS and physcion CRS, respectively, dissolve in methanol to produce five solutions containing 80 μg of each of aloe-emodin, rhein, emodin, chrysophanol per ml and 40 μg of physcion per ml. Measure accurately 2 ml of each above solutions to produce a mixture containing 16 μg of aloe-emodin, rhein, emodin, chrysophanol and 8 μg of physcion per ml.

Test solution Weigh accurately 0.15 g of the powder (through No. 4 sieve) to a stopper conical flask, accurately add 25 ml of methanol and weigh. Heat under reflux on a water bath for 1 hour, cool, weigh again, replenish the loss of solvent with methanol, mix well and filter. Measure accurately 5 ml of successive filtrate in a flask, expel the solvent, add 10 ml of 8% solution of hydrochloric acid, ultrasonicate for 2 minutes, add 10 ml of chloroform. Heat under reflux for 1 hour, cool, transfer to a separating funnel, wash the flask with a small quantity of chloroform and combine the washings to the separating funnel. Separate the chloroform layer, extract the acid solution again with three 10-ml quantities of chloroform, combine the chloroform extracts and recover the chloroform in vacuum to dryness. Dissolve the residue in methanol and transfer to a 10 ml volumetric flask, dilute with methanol to volume and mix well.

Procedure Accurately inject 10 μl of each of the reference solution and the test solution, respectively, into the column, and calculate the content.

It contains not less than 1.5 per cent of the total amount of aloe-emodin ($C_{15}H_{10}O_5$), rhein ($C_{15}H_8O_6$), emodin ($C_{15}H_{10}O_5$), chrysophanol ($C_{15}H_{10}O_4$) and physcion ($C_{16}H_{12}O_5$), calculated with reference to the dried drug.

Processing *Radix et Rhizoma Rhei* Eliminate foreign matter, wash clean, soften thoroughly, cut into thick slices or pieces, and dry in the air.

Radix et Rhizoma Rhei (*processed with wine*) Stir-bake the slices of Radix et Rhizoma Rhei as described under the method for stir-baking with wine (Appendix Ⅱ D) to dryness.

Radix et Rhizoma Rhei (*prepared*) Stew or steam the pieces of Radix et Rhizoma Rhei as described under the method for stewing or steaming with wine (Appendix Ⅱ D) until the drug darkens thoroughly.

Radix et Rhizoma Rhei (*carbonized*) Stir-bake the slices of Radix et Rhizoma Rhei as described under the method for carbonizing by stir-baking (Appendix Ⅱ D) until the outer surface is charred and the inner turns to be dark brown.

Action To purge fire and dredge intestines, reduce *heat* in blood and counteract *toxicity*, and eliminate blood stasis and stimulate menstruation.

Radix et Rhizoma Rhei (*stir-baked with wine*) To remove toxic *heat* from the blood in the upper portion of the body.

Radix et Rhizoma Rhei (*prepared*) To purge *heat* and remove toxic substances, but with less effect.

Radix et Rhizoma Rhei (*carbonized*) To reduce *heat* in blood, remove blood stasis, and arrest bleeding.

Indications Fever with constipation, retention of feces and abdominal pain; dysentery; jaundice caused by *damp-heat*; haematemesis, epistaxis, inflammation of eyes and sore throat due to *heat* in blood; appendicitis with abdominal pain; boils, sores and abscess; amenorrhea due to blood stasis; traumatic injuries; hemorrhage from the upper gastrointestinal tract; external use for scalds and burns.

Radix et Rhizoma Rhei (*stir-baked with wine*) Inflammation of the eye, swelling of the throat and painful swelling of the gums.

Radix et Rhizoma Rhei (*prepared*) Boils, sores and abscess.

Radix et Rhizoma Rhei (*carbonized*) Hemorrhage due to stagnation and *heat* in the blood.

Usage and dosage 3-30 g, not to be decocted for a long time if it is used for catharsis; for external use, appropriate quantity to be ground into powder for topical application after mixing with liquid.

Precaution Used with caution in pregnancy.

Storage Preserve in a ventilated and dry place, protected from moth.

Preparation Rhubarb Liquid Extract

Radix et Rhizoma Rhodiolae Crenulatae (红景天, Hongjingtian)

Bigflower Rhodiola Root

Bigflower Rhodiola Root is the dried root and rhizome of *Rhodiola crenulata* (Hook. f. et Thomas.) H. Ohba (Fam. Crassulaceae). The drug is collected in autumn when the scape is withered, removed from coarse bark, washed clean, and dried in the sun.

Description Rhizome cylindrical, stout, slightly curved, few branched, 5-20 cm long, 2.9-4.5 cm in diameter. Externally brown or chocolate brown, coarse, wrinkled, a layer of yellow membranous epidermis with cerise decorative pattern visible when baring the outer epidermis; some old scapes persisted, base bearing triangular or ovate membranous scales; internode irregular, fracture cerise to purplish-red, with a ring; texture light and lax. Tap root cylindrical, stout, about 20 cm long and 1.5 cm in diameter at the upper part, lateral root 10-30 cm long; fracture orange-red or purplish-red, some with cracks. Odour,

aromatic; taste, firstly slightly bitter and astringent, then sweet.

Identification (1) Transverse section of root: Cork of 5-8 layers of cells. Phelloderm cells elliptic or subrounded. Stele very broad, numerous vascular bundles arranged in 2-4 rings, outer ring consisting of collateral vascular bundles and relatively large, other 2-3 rings of amphivasal type and gradually smaller toward inside.
Transverse section of rhizome: Two to three rings of cork layer presented in old rhizome and absent in young rhizomes. Stele very broad, scattering vascular bundles; collateral vascular bundles radially arranged in a ring in the outer side, phloem relatively narrow, xylem vessels 5 to several grouped and sparsely arranged, rays of 2-4 rows of cells; amphivasal vascular bundles inside, stellately arranged.
(2) Carry out the method for thin layer chromatography (Appendix Ⅵ B), using silica gel G mixed with sodium carboxymethylcellulose as the coating substance and the lower layer of a mixture of chloroform, methanol, acetone and water (6∶3∶1∶1) as the mobile phase. Apply separately to the plate 10 μl of each of the reference solution and the test solution both obtained under Assay. After developing 18 cm and removal of the plate, dry it in air, expose to iodine vapour until the spots clear. The spot in the chromatogram obtained with the test solution corresponds in position and colour to the spot in the chromatogram obtained with the reference solution.

Water Carry out the method for the determination of water (Appendix Ⅸ H, Method 1), not more than 12.0 per cent.

Total ash Not more than 8.0 per cent (Appendix Ⅸ K).

Acid-insoluble ash Not more than 2.0 per cent (Appendix Ⅸ K).

Extractives Carry out the hot extraction method as described under the determination of ethanol-soluble extractives (Appendix X A), using 70% ethanol as the solvent, not less than 22.0 per cent.

Assay Carry out the method for high performance liquid chromatography (Appendix Ⅵ D).

Chromatographic system and system suitability Use octadecylsilane bonded silica gel as the stationary phase and a mixture of methanol and water (15∶85) as the mobile phase. As detector a spectrophotometer set at 275 nm. The number of theoretical plates of the column is not less than 2000, calculated with the reference to the peak of salidroside.

Reference solution Dissolve salidroside CRS, accurately weighed, in methanol to produce a solution containing 0.5 mg per ml as reference solution.

Test solution Weigh accurately 0.5 g of the powder (through No. 3 sieve) to a stopper conical flask, accurately add 10 ml of methanol and weigh. Ultrasonicate for 30 minutes, cool, weigh again, make up the loss of the solvent with methanol and mix well. Filter and use the successive filtrate as the test solution.

Procedures Inject accurately 10 μl of each of the reference solution and the test solution respectively, into the column, determine and calculate the content.
It contains not less than 0.50 per cent of salidroside ($C_{14}H_{20}O_7$), calculated with reference to the dried drug.

Processing Remove from fibrous roots, eliminate foreign matter, cut into slices, and dry.

Action To reinforce qi, promote blood flow and relieve asthma.

Indications Constriction in the chest with heart pain, apoplexy, lassitude, and asthma.

Usage and dosage 3-6 g.

Storage Preserve in a ventilated and dry place, protected from moisture and moth.

Radix et Rhizoma Rubiae (茜草, Qiancao)

Indian Madder Root

Indian Madder Root is the dried root and rhizome of *Rubia cordifolia* L. (Fam. Rubiaceae). The drug is collected in spring or summer, removed from soil, and dry.

Description Rhizomes nodular, marked with numerous fascicled roots varying in thickness. Roots cylindrical, somewhat curved, 10-25 cm long, 0.2-1 cm in diameter; externally reddish-brown or dark brown, with fine lingitudinal wrinkles and a few rootlet scars; the place where the outer bark has exfoliated appearing yellowish-red. Texture fragile, easily broken, fracture even, bark narrow and purplish-red, wood broad, pale yellowish-red, exhibiting numerous pores of vessels. Odour, slight; taste, bitterish with an irritating sensation to tongue when chewed for a long time.

Identification (1) Transverse section of root: Cork cells 6-12 layered, containing brown contents. Parenchymatous cells in phelloderm sometimes containing reddish-brown granules. Cells in phloem relatively small. Cambium ring less distinct. The majority of root occupied by wood, completely lignified, xylem rays indistinct. Parenchymatous cells containing raphides of calcium oxalate.
(2) Shake 0.2 g of the powder with 5 ml of ether for several minutes and filter. To the filtrate add 1 ml of sodium hydroxide TS, shake and allow to stand. The water layer shows a red colour; the ether layer is colourless, examine the ether layer under ultraviolet light at 365 nm, a sky-blue fluorescence is shown.
(3) Place 0.5 g of the powder to a conical flask, add 10 ml of methanol, ultrasonicate for 30 minutes and filter. Concentrate the filtrate to about 1 ml as the test solution. Prepare a reference solution of 0.5 g of Radix Rubiae reference drug in the same manner. Dissolve a quantity of rubimaillin CRS in methanol to produce a reference solution containing 2.5 mg per ml. Carry out the method for thin layer chromatography (Appendix Ⅵ B), using silica gel G mixed with sodium carboxymethylcellulose as the coating substance and a mixture of petroleum ether (60-90℃) and acetone (4∶1) as the mobile phase. Apply separately 5 μl of each of the three solutions to the plate. After developing and removal of the plate, dry it in air and examine under ultraviolet light at 365 nm. The spots in the chromatogram obtained with the test solution correspond in position and colour to the spots in the chromatogram obtained with the reference drug solution and the reference solution.

Water Carry out the method for determination of water (Appendix Ⅸ H, method 1), not more than 12.0 per cent.

Assay Carry out the method for high performance liquid chromatography (Appendix Ⅵ D).

Chromatographic system and system suitability Use octadecylsilane bonded silica gel as the stationary phase and a mixture of methanol, water and tetrahydrofuran (310∶90∶3) as the mobile phase. The wavelength of the detector is 250 nm. The number of theoretical plates of the column is not less than 4000, calculated with the reference to the peak of rubimaillin.

Reference solution Weigh accurately a quantity of rubimaillin CRS, dissolve in methanol to produce a solution containing 80 μg per ml.

Test solution Weigh accurately 0.2 g of the powder to a conical flask, add 25 ml of methanol and weigh, macerate overnight, ultrasonicate for 30 minutes, allow to cool, weigh again and replenish the loss of the solvent with methanol and mix well. Filter and use the successive filtrate as the test solution.

Procedures Accurately inject 5 μl of each of the reference solution and the test solution, respectively, into the column, calculate the content.
It contains not less than 0.40 per cent rubimaillin ($C_{17}H_{15}O_4$), calculated with reference to the dried drug.

Processing *Radix Rubiae* Eliminate foreign matter, wash clean, soften thoroughly, cut into thick slices or sections, and dry.

Radix Rubiae (carbonized) Stir-bake the slices or the sections of Radix Rubiae as described under the method for carbonizing by stir-baking (Appendix Ⅱ D) until the outer part is charred.

Action To remove *heat* from blood and arrest bleeding, eliminate blood stasis, and to stimulate menstruation.

Indications Spitting of blood, epistaxis, abnormal uterine bleeding, traumatic bleeding; amenorrhea; arthralgia, traumatic swelling and pain.

Usage and dosage 6-9 g.

Storage Preserve in a dry place.

Radix et Rhizoma Salviae Miltiorrhizae (丹参, Danshen)

Danshen Root

Danshen Root is the dried root and rhizome of *Salvia miltiorrhiza* Bge. (Fam. Labiatae). The drug is collected in spring or autumn, removed from soil, and dried.

Description Rhizomes short and stout, sometimes with remains of a stem at the apex. Several roots, long cylindrical, slightly curved, some branched and with rootlets, 10-20 cm long, 0.3-1 cm in diameter. Externally brownish-red or dark brownish-red, rough, longitudinally wrinkled. The bark of old roots loose, mostly purplish-brown, usually scaling off. Texture hard and fragile, fracture loose, cleft or slightly even and dense, with brownish-red bark and greyish-yellow or purplish-brown wood, showing bundles of vessels, yellowish-white, arranged radially. Odour, slight; taste, slightly bitter and astringent.
Cultivars relatively stout, 0.5-1.5 cm in diameter. Externally reddish-brown, longitudinally wrinkled, the bark closely adhering to wood and uneasy to be scaled off. Texture compact, fracutre relatively even, slight horny.

Identification (1) Shake 1 g of the powder with 5 ml of ether, stand for 1 hour, and filter. Evaporate the filtrate to dryness, and dissolve the residue in 1 ml of ethyl acetate as the test solution. Prepare a solution of 1 g of Radix et Rhizoma Salviae Miltiorrhizae reference drug in the same manner as the reference drug solution. Dissolve tanshinone ⅡA CRS in ethyl acetate to produce a solution containing 2 mg per ml as the reference solution. Carry out the method for thin layer chromatography (Appendix Ⅵ B), using silica gel G as the coating substance and a mixture of benzene and ethyl acetate (19:1) as the mobile phase. Apply seperately to the plate 5 μl of each of the three solutions. After developing and removal of the plate, dry it in air. The spots in the chromatogram obtained with the test solution correspond in position and colour to the spots in the chromatogram obtained with the reference drug solution; and a dark-red spot in the chromatogram obtained with the test solution corresponds in position and colour to the spot in the chromatogram obtained with the reference solution.
(2) To 0.2 g of the powder add 25 ml of 75% methanol, heat under reflux for 1 hour and filter. Evaporate the filtrate to 1 ml as the test solution. Dissolve a quantity of salvianolic acid B CRS in 75% methanol to produce a solution containing 2 mg per ml as the reference solution. Carry out the method for thin layer chromatography (Appendix Ⅵ B), using silica gel GF_{254} as the coating substance and a mixture of toluene, chloroform, ethyl acetate, methanol and formic acid (2:3:4:0.5:2) as the mobile phase. Apply separately to the plate 5 μl of the above two solutions. After developing and removal of the plate, dry in air. Examine under ultraviolet light at 254 nm. The spot in the chromatogram obtained with the test solution corresponds in position and colour to the spot obtained with the reference solution.

Water Carry out the method for determination of water (Appendix Ⅸ H, method 1), not more than 13.0 per cent.

Total ash Not more than 10.0 per cent (Appendix Ⅸ K).

Acid-insoluble ash Not more than 3.0 per cent (Appendix Ⅸ K).

Extractives *Water-soluble extractives* Carry out the method for determination of water-soluble extractives (Appendix Ⅹ A, cold maceration method), not less than 35.0 per cent.

Ethanol-soluble extractives Carry out the method for determination of ethanol-soluble extractives (Appendix Ⅹ A, hot extraction method), using ethanol as the solvent, not less than 15.0 per cent.

Heavy metals and harmful elements Carry out the methods for determination of lead, cadmium, arsenic, mercury and copper (Appendix Ⅸ B, atomic absorption spectrophotometry or inductively coupled plasma mass spectrometry), not more than 5 ppm of lead, 0.3 ppm of cadmium, 2 ppm of arsenic, 0.2 ppm of mercury and 20 ppm of copper.

Assay ***Tanshinone ⅡA*** Carry out the method for high performance liquid chromatography (Appendix Ⅵ D).

Chromatographic system and system suitability Use octadecylsilane bonded silica gel as the stationary phase and a mixture of methanol and water (75:25) as the mobile phase. As detector a spectrophotometer set at 270 nm. The number of theoretical plates of the column is not less than 2000, calculated with the reference to the peak of tanshinone ⅡA.

Reference solution Accurately weigh 10 mg of tanshinone ⅡA CRS to a 50 ml amber volumetric flask. Dissolve and dilute with methanol to volume and mix well. Accurately measure 2 ml to a 25 ml amber volumetric flask, dilute with methanol to volume, and mix well (containing 16 μg of tanshinone ⅡA per ml).

Test solution Weigh accurately 0.3 g of the powder (through a No. 3 sieve) to a stopper conical flask. Add accurately 50 ml of methanol, and weigh. Heat under reflux for 1 hour, cool, weigh again, make up the loss of weight with methanol, mix well and filter, use the successive filtrate as the test solution.

Procedures Accurately inject 5 μl of each of the reference

solution and the test solution, respectively, into the column, determine and calculate the content.
It contains not less than 0.2 per cent of tanshinone ⅡA ($C_{19}H_{18}O_3$).

Salvianolic acid B Carry out the method for high performance liquid chromatography (Appendix Ⅵ D).

Chromatographic system and system suitability Use octadecylsilane bonded silica gel as the stationary phase and a mixture of methanol, acetonitrile, formic acid and water (30 : 10 : 1 : 59) as the mobile phase. As detector a spectrophotometer set at 286 nm. The number of theoretical plates of the column is not less than 2000, calculated with the reference to the peak of salvianolic acid B.

Reference solution Weigh accurately a quantity of salvianolic acid B CRS, dissolve in 75% methanol to produce a solution containing 0.14 mg per ml.

Test solution Weigh accurately 0.2 g of the powder (through No. 3 sieve) to a stopper conical flask, accurately add 50 ml of 75% methanol and weigh. Heat under reflux for 1 hour, cool and weigh again, replenish the loss of solvent with 75% methanol, mix well and filter.

Procedure Accurately inject 10 μl of each of the reference solution and the test solution, respectively, into the column, and calculate the content.
It contains not less than 3.0 per cent of salvianolic acid B ($C_{36}H_{30}O_{16}$), calculated with reference to the dried drug.

Processing *Radix et Rhizoma Salviae Miltiorrhizae* Remove foreign matter and remains of stems, wash clean, soften thoroughly, cut into thick slices, and dry.

Radix et Rhizoma Salviae Miltiorrhizae (processed with wine) Stir-bake the slices of Radix Salviae Miltiorrhizae as described under the method for stir-baking with wine (Appendix Ⅱ D) to dryness.

Action To remove blood stasis and relieve pain, promote the flow of blood and stimulate menstruation, and clear *heart-fire* and remove restlessness.

Indications Menstrual disorders, amenorrhea, dysmenorrhea; mass formation in the abdomen; pricking pain in the chest and abdomen, pain in acute arthritis and subcutaneous infection; fidgets and insomnia; hepatosplenomegaly; angina pectoris.

Usage and dosage 9-15 g.

Precaution Incompatible with Rhizoma et Radix Veratri.

Storage Preserve in a dry place.

Radix et Rhizoma seu Caulis Acanthopanacis Senticosi (刺五加, Ciwujia)

Manyprickle Acanthopanax

Manyprickle Acanthopanax is the dried root and rhizome or stem of *Acanthopanax senticosus* (Rupr. et Maxim.) Harms (Fam. Araliaceae). The drug is collected in spring or autumn, washed clean, and dried.

Description Rhizomes irregular, nodular cylindrical, 1.4-4.2 cm in diameter. Root cylindrical, mostly tortuous, 3.5-12 cm long, 0.3-1.5 cm in diameter. Externally greyish-brown or blackish-brown, rough, with fine longitudinal furrows and wrinkles, bark relatively thin, sometimes exfoliated, the exposed surface appearing greyish-yellow. Texture hard, fracture yellowish-white, fibrous. Odour, characteristic and aromatic; taste, slightly pungent, somewhat bitter and astringent.
Stems long cylindrical, much-branched, varying in length, 0.5-2 cm in diameter. Externally pale grey, the old branches greyish-brown, furrowed longitudinally, spineless; the young branches yellowish-brown, densely spiculate. Texture hard, uneasily broken, fracture showing thin bark, yellowish-white, wood being broad, pale yellow, and pith at the centre. Odour, slight; taste slight pungent.

Identification (1) Transverse section of root: Cork cells of ten or more layers. Phelloderm thin, scattered with secretory canals; most of parenchymatous cells containing clusters of calcium oxalate, 11-64 μm in diameter. The outside of phloem scattered with more fibre bundles, which lessen inwards; secretory canals subrounded or elliptical, 25-51 μm long radially, 48-97 μm long tangentially; parenchymatous cells containing clusters. Cambium in a ring. The majority of root occupied by xylem, rays 1-3 rows of cells wide; vessels relatively thin-walled, mostly several grouped; xylem fibres well developed.
Transverse section of rhizome: Fibre bundles in phloem much more than those in root; pith visible.
Transverse section of stem: Pith well developed.
(2) To 5 g of the powder add 50 ml of 75% ethanol, heat under reflux for 1 hour, filter and evaporate the filtrate to dryness, dissolve the residue with 10 ml of water in a separating funnel, extract with two 5-ml quantities of chloroform, combine the chloroform solutions, evaporate to dryness, dissolve the residue in 1 ml of methanol as the test solution. Prepare a solution of 5 g of Radix et Rhizoma seu Caulis Acanthopanacis Senticosi reference drug in the same manner as the reference drug solution. Dissovle isofraxidin CRS, in methanol to produce a solution containing 1 mg per ml as the reference solution. Carry out the method for thin layer chromatography (Appendix Ⅵ B), using silica gel G mixed with sodium carboxymethylcellulose as the coating substance and a mixture of chloroform and methanol (19:1) as the mobile phase. Apply 10 μl each of the three solutions separately to the plate. After developing and removal of the plate, dry in air, examine under ultraviolet light at 254 nm. The spots in the chromatogram obtained with the test solution correspond in position and colour to the spot in the chromatogram obtained with the drug reference solution. A blue spot in the chromatogram obtained with the test solution corresponds in position and colour to the spot in the chromatogram obtained with the reference solution.

Water Carry out the method for determination of water (Appendix Ⅸ H, method 1), not more than 10.0 per cent.

Total ash Not more than 9.0 per cent (Appendix Ⅸ K).

Extractives Carry out the method for determination of ethanol-soluble extractives (Appendix Ⅹ A, the hot extraction method), using methanol as the solvent, not less than 3.0 per cent.

Assay Carry out the method for high performance liquid chromatography (Appendix Ⅵ D).

Chromatographic system and system suitability Use octadecylsilane bonded silica gel as the stationary phase and a mixture of methanol and water (20:80) as the mobile phase. As detector a spectrophotometer set at 265 nm. The number of theoretical plates of the column is not less than 2000, calculated with the reference to the peak of syringoside.

Reference solution Weigh accurately a quantity of syringoside CRS, dissolve in methanol to produce a solution

containing 80 μg per ml.

Test solution Weigh accurately 2 g of the coarse powder to a stopper conical flask, add accurately 25 ml of methanol, and weigh. Ultrasonicate (power 250 W, frequency 33 kHz) for 30 minutes, cool and weigh again, replenish the loss of solvent with methanol and mix well, filter through the millipore (0.45 μm), use the successive filtrate as the test solution.

Procedure Inject accurately 10 μl of each of the reference solution and the test solution into the column, respectively, and calculate the content.
It contains not less than 0.050 per cent of syringoside ($C_{17}H_{24}O_9$), calculated with reference to the dried drug.

Action To reinforce *qi*, invigorate the function of the spleen and the kidney, and anchor the mind.

Indications Hypofunction of the spleen and the kidney marked by general weakness, lassitude, anorexia, aching of the loins and knees; insomnia and dream-disturbed sleep.

Usage and dosage 9-27 g.

Storage Preserve in a ventilated dry place, protected from moisture.

Preparation Manyprickle Acanthopanax Extract.

Radix et Rhizoma Sophorae Tonkinensis (山豆根, Shandougen)

Vietnamese Sophora Root

Vietnamese Sophora Root is the dried root and rhizome of *Sophora tonkinensis* Gagnep. (Fam. Leguminosae). The drug is collected in autumn, removed from foreign matter, washed clean, and dried.

Description Rhizomes irregular nodular, bearing remains of stems at the apex and several roots at the lower part. Roots long-cylindrical, usually branched, varying in length, 0.7-1.5 cm in diameter; externally brown to dull brown, with irregular longitudial wrinkles and transverse elongated lenticel-like protrusions. Texture hard, uneasily broken, fracture brownish in bark and pale yellow in wood. Odour, bean-like; taste very bitter.

Identification (1) Transverse section: Cork consisting of several to 10 or more layers of cells. The outer 1-2 rows of cells in phelloderm containing prisms of calcium oxalate, forming an interrupted ring of crystal cells, with lignified and thickened walls. Fibre bundles scattered in phelloderm and phloem. Cambium in a ring. Xylary developed, rays 1-8 cells wide; vessels subrounded, mostly singly scattered or in groups of 2 or more, some containing yellowish-brown contents; xylary fibres grouped and scattered. Parenchymatous cells filled with starch granules, a few cells containing prisms.
(2) Shake 0.5 g of the coarse powder with 10 ml of chloroform and 0.2 ml of strong ammonia TS for 15 minutes, filter, evaporate the filtrate to dryness. Dissolve the residue in 0.5 ml of chloroform as the test solution. Dissolve matrine CRS and oxymatrine CRS in chloroform to prepare a mixture containing 1 mg of each per ml as the reference solution. Carry out the method for thin layer chromatography (Appendix VI B), using silica gel G mixed with sodium carboxymethylcellulose as the coating substance and a mixture of chloroform, methanol and strong ammonia TS (4:1:0.1) as the mobile phase. Apply separately to the plate 1-2 μl of the test solution and 4-6 μl of the reference solution. After developing and removal of the plate, dry in air, spray with dilute potassium iodobismuthate TS. The orange-yellow spots in the chromatogram obtained with the test solution correspond in position and colour to the spots in the chromatogram obtained with the reference solution.

Assay Place about 0.5 g of the coarse powder, weighed accurately, to a Soxhlet's extractor, add dropwise 1 ml of a mixture of absolute ethanol and strong ammonia TS (3:2) to moisten, stand for 30 minutes, and heat under reflux with 80 ml of chloroform for 4 hours. Recovering the chloroform, concentrate the extract to dryness, dissolve the residue in methanol and transfer to a 5 ml volumetric flask, dilute with methanol to volume, mix well and filter, use the filtrate as the test solution. Dissolve oxymatrine CRS in methanol to produce a solution containing 1 mg per ml as the reference solution. Carry out the method for thin layer chromatography (Appendix VI B), using silica gel G mixed with sodium carboxymethylcellulose as the coating substance and a mixture of chloroform, methanol and strong ammonia TS (4:1:0.1) as the mobile phase. Apply accurately to the plate 2-6 μl of the test solution and 2 μl and 4 μl of the reference solution alternatively. After developing in a chamber pre-saturated with the mobile phase for 30 minutes, remove the plate, dry it in air. Spray with dilute potassium iodobismuthate TS, cover the plate with a piece of glass of the same size and fix up the edge with tape. Carry out the method for thin layer chromatography (thin layer chromatographic scanning method, Appendix VI B), scan at the wavelength of $\lambda_S = 520$ nm, $\lambda_R = 650$ nm. Measure the integration value of the absorbance from the test solution and the reference solution, respectively, and calculated the content.
It contains no less than 0.40 per cent of oxymatrine ($C_{15}H_{24}N_2O_2$), calculated with reference to the dried drug.

Processing Eliminate foreign matter, soak, wash clean, soften thoroughly, cut into thick slices, and dry in the sun.

Action To remove *toxic-heat*, promote the subsidence of swelling, and ease throat.

Indications Sore throat and painful swollen gums due to accumulation of *toxic-heat*.

Usage and dosage 3-6 g.

Storage Preserve in a dry place.

Radix Euphorbiae Pekinensis (京大戟, Jingdaji)

Peking Euphorbia Root

Peking Euphorbia Root is the dried root of *Euphorbia pekinensis* Rupr. (Fam. Euphorbiaceae). The drug is collected in autumn and winter, washed clean and dried in the sun.

Description Irregularly long conical, slightly curved, usually branched, 10-20 cm long, 1.5-4 cm in diameter. Externally greyish-brown or brown, rough, exhibiting longitudinal wrinkles, transverse lenticel-like protrusions and branch-root scars. Apex slightly expanded, with numerous stem bases and bud scars. Texture hard, uneasily broken, fracture whitish or pale yellow, fibrous. Odour, slight; taste, slightly bitter and astringent.

Identification (1) Powder: Pale yellow. Simple starch granules subspheroid or ovoid, 3-15 μm in diameter, hilum pointed or slit-shaped; compound granules of 2-3

components. Clusters of calcium oxalate 19-40 μm in diameter. Bordered pitted and reticulated vessels more commonly found, 26-50 μm in diameter. Fibres individual or in bundles, walls relatively thick and non-lignified. Non-articulate laticiferous tubes mostly broken, containing yellow minute latex granules.

(2) Take 2 hand made thin slices of the drug, to one slice add 1 drop of glacial acetic acid and sulfuric acid respectively, observe under a microscope, a red colour is produced at the laticiferous-tubes of phloem, which gradually disappears in 5 minutes; to another slice add potassium hydroxide TS, a brownish-yellow colour is produced.

Processing *Radix Euphorbiae Pekinensis* Eliminate foreign matter, wash clean, soften thoroughly, cut into thick slices, and dry.

Radix Euphorbiae Pekinensis (*processed with vinegar*) Boil the clean Radix Euphorbiae as described under the method of boiling with vinegar (Appendix Ⅱ D) until vinegar is exhausted. Use 30 kg of vinegar per 100 kg of Radix Euphorbiae Pekinensis.

Action To cause drastic purgation.

Indications Anasarca, hydrothorax and ascites with dyspnea, constipation and oliguria.

Usage and dosage 1.5-3 g.

Precaution Contraindicated in pregnancy. Incompatible with Radix Glycyrrhizae.

Storage Preserve in a dry place, protected from moth.

Radix Gentianae Macrophyllae (秦艽, Qinjiao)

Largeleaf Gentian Root

Largeleaf Gentian Root is the dried root of *Gentiana macrophylla* Pall., *Gentiana straminea* Maxim., *Gentiana crassicaulis* Duthie ex Burk. or *Gentiana dahurica* Fisch. (Fam. Gentianaceae). According to the description the former three species are known as "Qinjiao" and "Mahuajiao", respectively. The latter is known as "Xiaoqinjiao". The drug is collected in spring and autumn, removed from soil; "Qinjiao" and "Mahuajiao" are softened in the sun, either piled up until the drug becomes reddish-yellow or greyish-yellow on the surface, spread out and dried in the sun, or dried in the sun directly after collecting; as for "Xiaoqinjiao", the black bark is rubbed off while fresh and dried in the sun.

Description *Qinjiao* Subcylindrical, the upper part thick and the lower part thin, twisted, 10-30 cm long, 1-3 cm in diameter. Externally yellowish-brown or greyish-yellow, with longitudinal or twisted wrinkles. Remains of stem bases and fibrous pericladium occurring at the apex. Texture hard and fragile, easily broken, fracture slight oily, bark yellow or brownish-yellow, wood yellow. Odour, characteristic; taste, bitter and slightly astringent.

Mahuajiao Subconical, frequently expanded by some small roots gathered, up to 7 cm in diameter. Externally dark brown, rough, with fissures, showing reticulated pits. Texture lax and fragile, easily broken, fracture frequently rotten-wood-shaped.

Xiaoqinjiao Subconical or subcylindrical, 8-15 cm long, 0.2-1 cm in diameter. Externally brownish-yellow. Main root frequently 1, having fibrous pericladia on the remains of stem bases, often branched at the lower part. Fracture yellowish-white.

Identification (1) Macerate 2 g of the coarse powder in 30 ml of a mixture of chloroform, methanol and strong ammonia TS (75∶25∶5) for 2 hours and filter. Concentrate the filtrate on a water bath to about 1 ml, add 2 ml of hydrochloric acid solution (1 mol/L) and continue to evaporate the chloroform, cool and filter. Transfer the filtrate to two test tubes, to one tube add mercuric potassium iodide TS, a pale yellowish-white precipitate is produced; to another tube add potassium iodobismuthate TS, a brownish-red precipitate is produced.

(2) Examine the fracture under an ultraviolet light at 365 nm, a yellowish-white or golden yellow fluorescence is shown.

Extractives Carry out the hot maceration method as described under the determination of ethanol-soluble extractives (Appendix Ⅹ A), using ethanol as the solvent, not less than 24.0 per cent.

Assay Carry out the method for high performance liquid chromatography (Appendix Ⅵ D).

Chromatographic system and system suitability Use octadecylsilane bonded silica gel as the stationary phase and a mixture of methanol and water (1∶4) as the mobile phase. As detector a spectrophotometer set at 254 nm. The number of theoretical plates of the column is not less than 3000, calculated with the reference to the peak of gentiopicrin.

Reference solution Weigh accurately a quantity of gentiopicrin CRS, dissolve in methanol to produce a solution containing 0.5 mg per ml as the reference solution.

Test solution Weigh accurately 0.5 g of the powder (through No. 3 sieve), add 20 ml of methanol, heat under reflux on a water bath for 30 minutes, cool and filter. Evaporate the filtrate under reduced pressure to dryness. Dissolve the residue with a quantity of methanol, filter, transfer to a 50 ml volumetric flask and dilute with methanol to volume, mix well. Accurately measure 1 ml into a 5 ml volumetric flask, dilute with methanol to volume, and mix well.

Procedures Accurately inject 10 μl of each of the reference solution and the test solution, respectively, into the column, determine and calculate the content.

It contains not less than 2.0 per cent of gentiopicrin ($C_{16}H_{20}O_9$), calculated with reference to the dried drug.

Processing Eliminate foreign matter, wash clean, soften thoroughly, cut into thick slices, and dried in the sun.

Action To relieve rheumatic conditions, and remove *damp-heat*.

Indications Rheumatic or rheumatoid arthrits with muscular contracture and severe joint pain; fever recurring in the afternoon, fever in infants with malnutrition.

Usage and dosage 3-9 g.

Storage Preserve in a ventilated and dry place.

Radix Glehniae (北沙参, Beishashen)

Coastal Glehnia Root

Coastal Glehnia Root is the dried root of *Glehnia*

littoralis Fr. Schmidt ex Miq. (Fam. Umbelliferae). The drug is collected in summer and autumn, removed from rootlet, washed clean, partially dried in the air, treated with boiling water, peeled and dried, or dried immediately after washing.

Description Slenderly cylindrical, branching occasionally, 15-45 cm long, 0.4-1.2 cm in diameter. Externally yellowish-white, slightly rough, occasionally with patches of cork adhering, or yellowish-brown when unpeeled, finely wrinkled longitudinally, and with brownish-yellow spotted rootlet scars. Top usually with yellowish-brown remains of rhizome. The upper part somewhat thin, the middle part relatively thick, and the lower part tapering. Texture fragile, easily broken, fracture yellowish-white in bark and yellow in wood. Odour, characteristic; taste, sweetish.

Identification Transverse section: Phelloderm of several layers of parenchymatous cells, scattered with secretory canals. Cork visible when unpeeled. Phloem broad, rays distinct, sieve tube groups collapsed in the outer part and appearing as a narrow band; secretory canals scattered, 20-65 μm in diameter, containing yellowish-brown secretion, surrounded by 5-8 secretory cells. Cambium in a ring. Xylem rays 2-5 cells wide; most vessels arranged in V-shape; parenchymatous cells containing gelatinized starch granules.

Processing Remove remains of stems and foreign matter, soften slightly, cut into sections, and dry.

Action To replenish *yin* of the lung and stomach, remove *heat* from the lung, and promote production of body fluids.

Indications Dry cough caused by *heat* in the *lung*; bloody sputum in phthisis; thirst in febrile diseases.

Usage and dosage 4.5-9 g.

Precaution Incompatible with Rhizoma et Radix Veratri.

Storage Preserve in a ventilated and dry place, protected from moth.

Radix Hedysari (红芪, Hongqi)

Manyinflorescenced Sweetvetch Root

Manyinflorescenced Sweetvetch Root is the dried root of *Hedysarum polybotrys* Hand. -Mazz. (Fam. Leguminosae). The drug is collected in spring or autumn, removed from rootlet and root stock, and dried in the sun.

Description Cylindrical, less branched, upper end slightly thick, 10-50 cm long, 0.6-2 cm in diameter. Externally reddish-brown, tinged with greyish, with longitudinal wrinkles, transversely elongated lenticel-like protrusions and a few rootlet scars, outer layer easily stripped off, the exposed layer yellowish. Texture hard and tough, uneasily broken, fracture fibrous and starchy, yellowish-white in bark and yellowish-brown in wood, rays radial, cambium ring brownish. Odour, slight; taste sweetish, slightly bean-like on chewing.

Identification (1) Transverse section: Cork consisting of 6-8 layers of cells. Phelloderm narrow, with 2-4 layers of collenchymatous cells at the outside. Phloem broader, cleft outside, fibres in bundles scattered, with thickened walls, slightly lignified; phloem rays often curved outside. Cambium in a ring. Vessels in xylem singly scattered or 2-3 cells grouped, surrounded by xylary fibres. Fibre bundles surrounded by parenchymatous cells containing prisms of calcium oxalate.

Powder: Yellowish-brown. Fibres in bundles, 5-22 μm in diameter, with thickened walls, slightly lignified, surrounded by a sheath of parenchymatous cells containing calcium oxalate prisms, forming crystal fibres, the walls of crystal cells unevenly thickened. Prisms of calcium oxalate 7-14 μm in diameter, up to 22 μm long. Bordered pitted vessels up to 145 μm in diameter. Simple starch granules subrounded or ovoid-rounded, 2-19 μm in diameter; compound granules of 2-8 components.

(2) Place 5 g of the powder into a Soxhlet's extractor, heat under reflux in 80 ml of petroleum ether (60-90℃) on a water bath for 4 hours. Transfer the extract to a separating funnel, extract by shaking with 3 quantities (20 ml, 20 ml and 10 ml) of a 1% solution of potassium carbonate, combine the potassium carbonate solutions, adjust to pH 1-2 with dilute hydrochloric acid and extract with three 20-ml quantities of ether, combine the ether solutions and evaporate to dryness. Dissolve the residue in 1 ml of methanol as the test solution. Prepare a solution of 5 g of Radix Hedysari reference drug in the same manner as the reference drug solution. Carry out the method for thin layer chromatography (Appendix Ⅵ B), using silica gel G as the coating substance and a mixture of petroleum ether (30-60℃), ethyl acetate and benzene (3∶2∶2) as the mobile phase. Apply separately to the plate 10 μl of each of the two solutions. After developing and removal of the plate, dry in air, spray with a 1% solution of vanillin in sulfuric acid. The pink spots in the chromatogram obtained with the test solution correspond in position and colour to the spots in the chromatogram obtained with the reference drug solution.

Extractives Carry out the method for Determination of ethanol-soluble extractives (Appendix Ⅹ A, the hot extraction method), using 45% ethanol as the solvent, not less than 30.0 per cent.

Processing Eliminate foreign matter, grade according to size, wash clean, soften thoroughly, cut into thick slices, and dry.

Action To reinforce *qi* and strengthen the superficial resistance, induce urination, promote the drainage of pus and the growth of new tissues.

Indications Deficiency of *qi* with lack of strength, anorexia and loose stools; sinking of *spleen-qi* marked by protracted diarrhea and prolapse of the rectum; hematochezia and abnormal uterine bleeding; spontaneous sweating due to weakened superficial resistance; edema due to deficiency *of qi*; unruptured abscesses; anemia; diabetes; albuminuria in chronic nephritis.

Usage and dosage 9-30 g.

Storage Preserve in a ventilated and dry place, protected from moisture and moth.

Radix Hedysari Praeparata cum Melle (炙红芪, Zhihongqi)

Prepared Manyinflorescenced Sweetvetch Root

The drug is the processed Radix Hedysari.

Procedure Stir-bake the slices of Radix Hedysari as described under the method for stir-baking with honey (Appendix Ⅱ D) until no more sticky to fingers.

Description Occurring in rounded or elliptical thick slices, 0.4-1.5 cm in diameter, 1-2 mm thick. Externally reddish-

brown, slightly lustrous, wrinkled longitudinally and remained with a few rootlet scars. The surface of slice often showing some twisted clefts, bark pale yellow, cambium ring pale brown, wood pale yellowish-brown, showing radial striations. Odour, honeyed-fragrant; taste, sweet; slightly sticcky, and bean-like on chewing.

Identification Use 7 g of the powder, carry out the method as described under the test (2) of Identification for Radix Hedysari. It shows the same results.

Extractives Carry out the method as described under the Extractives for Radix Hedysari. It contains not less than 40.0 per cent.

Action To invigorate the function of spleen and stomach.

Indications *Qi-deficiency*, lassitude, anorexia, diarrhea.

Usage and dosage, Storage As described under Radix Hedysari.

Radix Inulae (土木香, Tumuxiang)

Inula Root

Inula Root is the dried root of *Inula helenium* L. (Fam. Compositae). The drug is collected in autumn, removed from soil, and dried in the sun.

Description Conical, slightly curved, 5-20 cm long. Externally yellowish-brown or dark brown, with longitudinal wrinkles and rootlet scars. Root stock large, with sunken stem scars and remains of leaf sheath at apex, surrounded by cylindrical rootlets. Texture hard, uneasily broken, fracture slightly even, yellowish-white to pale greyish-yellow, showing dented-dotted oil cavities. Odour, slightly aromatic; taste, bitter and pungent.

Identification (1) Transverse section: Cork consisting of several layers of cells. Phloem broad. Cambium ring less distinct. Xylem rays 6-25 cells wide; vessels sparse, singly scattered or several aggregated in groups, radiately arranged; xylary fibres rare, in bundles, surrounding the vessels at the centre of xylem. Parenchymatous cells containing inulin. Oil cavities scattered in phloem and xylem, 80-300 μm in diameter.
Powder: Pale yellowish-brown. Inulin abundant, colourless, in irregular pieces. Reticulated vessels 30-100 μm in diameter. Cork cells polygonal, yellowish-brown. Xylary fibres long-fusiform, with oblique ends and oblique pits.
(2) To 0.5 g of the powder add 4 ml of methanol, tightly stoppered, shake, allow to stand for 30 minutes, and filter, use the filtrate as the test solution. Dissolve alantolactone CRS and isoalantolactone CRS in methanol to produce a mixture containing 2 mg of each per ml as the reference solution. Carry out the method for thin layer chromatography (Appendix Ⅵ B), using silica gel G mixed with 0.25% silver nitrate solution as the coating substance and a mixture of petroleum ether (60-90℃), benzene and ethyl acetate (5 : 1 : 1) as the mobile phase. Apply separately to the plate 5 μl each of the two solutions. After developing (protected from light) and removal of the plate, dry in air. Spray with a 5% solution of anisaldehyde in sulfuric acid, heat to the spots distinct. The two bluish-violet spots in the chromatogram obtained with the test solution correspond in position and colour to the spots in the chromatogram obtained with the reference solution.

Processing Eliminate foreign matter, wash clean, soften thoroughly, cut into slices, and dry in the sun.

Action To invigorate the *spleen* and regulate the function of the *stomach*, to relieve the depression of the *liver qi*, to alleviate pain, and to prevent abortion.

Indications Distending pain in the chest, hypochondria and epigastrium, vomiting and diarrhea; bruise or sudden sprain of the chest with pain during breathing; threatened abortion.

Usage and dosage 3-9 g, mostly used in pills or powder.

Storage Preserve in a cool and dry place.

Radix Isatidis (板蓝根, Banlangen)

Isatis Root

Isatis Root is the dried root of *Isatis indigotica* Fort. (Fam. Cruciferae). The drug is collected in autumn, removed from soil, and dried in the sun.

Description Cylindrical, slightly tortuous, 10-20 cm long, 0.5-1 cm in diameter. Externally greyish-yellow or brownish-yellow, wrinkled longitudinally and lenticellate horizontally, with rootlets or rootlet scars. Root stock slightly expanded, exhibiting dark green or dark brown petiole-bases arranged in whorls, and dense tubercles. Texture compact and soft, fracture yellowish-white in bark and yellow in wood. Odour, slight; taste, sweetish then bitter and astringent.

Identification (1) Transverse section: Cork consisting of several rows of cells. Phelloderm narrow. Phloem broad, rays distinct. Cambium in a ring. Xylem vessels yellow, subrounded, up to 80 μm in diameter; xylary fibres in bundles. Parenchymatous cells containing starch granules.
(2) Observe the decoction under an ultraviolet light at 365 nm, a blue fluorescence is shown.
(3) To 0.5 g of the powder, add 20 ml of dilute ethanol, ultrasonicate for 20 minutes and filter, evaporate the filtrate to dryness. Dissolve the residue with 1 ml of dilute ethanol as the test solution. Dissolve arginine CRS in dilute ethanol to produce a solution containing 0.5 mg per ml as the reference solution. Carry out the method for thin layer chromatography (Appendix Ⅵ B), using silica gel G mixed with sodium carboxmethylcellulose as the coating substance and a mixture of *n*-butanol, glacial acetic acid and water (19:5:5) as the mobile phase. Apply separately 1-2 μl of each of the two solutions to the plate (dry in air). After developing and removal of the plate, dry under a current of hot air, spray with ninhydrin TS, heat at 105℃ to the spots clear. The spot in the chromatography obtained with the test solution corresponds in position and colour to the spot obtained with the reference solution.

Water Not more than 15.0 per cent (Appendix Ⅸ H, method 1).

Extractives Carry out the hot extraction method as described under the determination of ethanol-soluble extractives (Appendix Ⅹ A), using 45% ethanol as solvent, not less than 25.0 per cent.

Processing Eliminate foreign matter, wash clean, soften thoroughly, cut into thick slices, and dry.

Action To remove *toxic-heat*, reduce *heat* in blood, and ease sore throat.

Indications Eruptive epidemic diseases with dark red or purplish tongue; mumps; pharyngitis, laryngitis, scarlet fever; erysipelas; carbuncles.

Dosage 9-15 g.

Storage Preserve in a dry place, protected from mould and moth.

Radix Kansui (甘遂, Gansui)

Gansui Root

Gansui Root is the dried tuber root of *Euphorbia kansui* T. N. Liou ex T. P. Wang (Fam. Euphorbiaceae). The drug is collected before flowering in spring or after the aerial part withering in autumn, removed from the outer bark by dasking, and dried in the sun.

Description Ellipsoid or long cylindrical or moniliform, 1-5 cm long, 0.5-2.5 cm in diameter. Externally whitish or yellowish-white, with brown patches of cork adhering at depression. Texture fragile, easily broken, fracture starchy and white, wood slightly radial-striated; long cylindrical tubers appearing more fibrous. Odour, slight; taste, sweetish and pungent.

Identification (1) Powder: Whitish. Starch granules fairly abundant, simple granules spherical or hemispherical, 5-34 μm in diameter, hilum pointed, slit-shaped or stellate; compound granules of 2-8 components. Non-articulated laticiferous tubes containing yellowish minute granular substances. Thick-walled cells rectangular, fusiform, subtriangular or polygonal, walls slightly lignified or non-lignified. Bordered pitted vessels more frequent, usually accompanied with fibre bundles.
(2) To 1 g of the powder add 10 ml of ethanol, ultrasonicate for 30 minutes and filter. Evaporate the filtrate to dryness and dissolve the residue in 1 ml of ethanol as the test solution. Prepare a solution of 1 g of Radix Kansui reference drug in the same manner as the reference drug solution. Carry out the method for thin layer chromatography (Appendix Ⅵ B), using silica gel G mixed with sodium carboxymethylcellulose as the coating substance and a mixture of toluene and acetone (10∶0.6) as the mobile phase. Apply separately to the plate 2 μl of each of the above two solutions. After developing and removal of the plate, dry it in air. Spray with a 10% solution of sulfuric acid in ethanol, heat at 105℃ to the spots clear. The spots in the chromatogram obtained with the test solution correspond in position and colour to the spots in the chromatogram obtained with the reference drug solution.

Water Carry out the method for determination of water (Appendix Ⅸ H, method 1), not more than 12.0 per cent.

Total ash Not more than 3.0 per cent (Appendix Ⅸ K).

Acid-insoluble ash Not more than 1.0 per cent (Appendix Ⅸ K).

Extractives Carry out the method for determination of ethanol-soluble extractives (Appendix Ⅹ A, the hot extraction method), using dilute ethanol as the solvent, not less than 18.0 per cent.

Processing *Radix Kansui* (*unprepared*) Eliminate foreign matter, wash clean, and dry in the sun.

Radix Kansui (*stir-baked with vinegar*) Stir-bake Radix Kansui as described under the method of stir-baking with vinegar (Appendix Ⅱ D) to dryness, using 30 kg of vinegar per 100 kg of Radix Kansui.

Action To cause drastic purgation and expel retained water.

Indications Anasarca, hydrothorax or ascites with dyspnea, constipation and oliguria.

Usage and dosage 0.5-1.5 g, mostly used in pills or powder after processing.

Precaution Contraindicated in pregnancy. Incompatible with Radix Glycyrrhizae.

Storage Preserve in a ventilated dry place, protected from moth.

Radix Knoxiae (红大戟, Hongdaji)

Knoxia Root

Knoxia Root is the dried root of *Knoxia valerianoides* Thorel et Pitard (Fam. Rubiaceae). The drug is collected in autumn and winter, removed from rootlet, washed clean, treated with boiling water for a moment, and dried.

Description Somewhat fusiform, occasionally branched, somewhat curved, 3-10 cm long, 0.6-1.2 cm in diameter. Externally reddish-brown, rugged, with twisted longitudinal wrinkles. Usually with a small stem scar at the upper end. Texture compact, fracture reddish-brown in bark and brownish-yellow in wood. Odour, slight; taste, sweetish and slightly pungent.

Identification (1) Transverse section: Cork consisting of several layers of cells. Phloem broad. Cambium in a ring. In xylem, groups of vessels arranged interruptedly and radially, consisting of several rows of vessels near cambium, in ward vessels gradually arranged in one row or scattered singly, rays broad. Parenchyma scattered with the mucilage cells containing raphides of calcium oxalate and secretory cells containing reddish-brown secretion.
(2) Boil 1 g of the powder in a test tube with 10 ml of water for 10 minutes, and filter. To the filtrate add 1 drop of sodium hydroxide TS; a cherry red colour is produced, which turns to orange yellow on acidifying with hydrochloric acid.
(3) Macerate 3 g of the powder in 30 ml of methanol for 1 hour, filter and evaporate the filtrate to dryness. Dissolve the residue in 10 ml of water, add 1 ml of hydrochloric acid, heat under reflux on a water bath for 30 minutes, cool immediately, extract by shaking with two 20-ml quantities of chloroform, combine the chloroform extracts, evaporate to dryness. Dissolve the residue in 1 ml of absolute ethanol as the test solution. Prepare a solution of 3 g of Radix Knoxiae reference drug in the same manner as the reference drug solution. Carry out the method for thin layer chromatography (Appendix Ⅵ B), using silica gel G mixed with sodium carboxymethylcellulose as the coating substance and the upper layer of a mixture of petroleum ether (30-60℃), ethyl formate and formic acid (15∶5∶1) as the mobile phase. Apply separately to the plate 5 μl of each of the two solutions. After developing and removal of the plate, dry in air, expose to ammonia vapor and examine in daylight. The major spots in the chromatogram obtained with the test solution correspond in position and colour to the major spots in the chromatogram obtained with the reference drug solution.

Processing Eliminate foreign matter, wash clean, soften thoroughly, cut into thick slices, and dry.

Action To cause drastic purgation and expel retained water, and counteract *toxicity* and induce subsidence of swelling and nodulation.

Indications Hydrothorax and ascites with constipation and oliguria; carbuncles, sores, scrofula.

Usage and dosage 1.5-3 g.

Storage Preserve in a cool and dry place.

Radix Linderae
(乌药, Wuyao)

Combined Spicebush Root

Combined Spicebush Root is the dried root tuber of *Lindera aggregata* (Sims) Kosterm. (Fam. Lauraceae). The drug is collected all the year round, removed from rootlet, washed clean, either sliced while fresh and then dried in the sun or sun-dried directly.

Description Mostly spindle-shaped, slightly curved, some constricted in the middle to be moniliform, 6-15 cm long, 1-3 cm in diameter. Externally yellowish-brown, with longitudinal wrinkles and sparse rootlet scars. Texture hard. Slices up to 0.2-2 mm thick, transversely cut surface yellowish-white or yellowish-brown, rays radiate, annual rings visible, deeper in colour in the middle part. Odour, aromatic; taste, bitterish and pungent, with a cooling sensation.
Old and not spindle-shaped tap roots can not be used medicinally.

Identification (1) Powder: Yellowish-white. Starch granules fairly abundant, simple granules subspherical, oblong or ovoid, 4-39 μm in diameter, hilum Y-shaped, V-shaped or cleft; compound granules consisting of 2-4 components. Xylary fibres yellowish, mostly in bundles, 20-30 μm in diameter, walls about 5 μm in thickness, with simple pits, lumina filled with starch granules. Phloem fibres nearly colourless, long spindle-shaped, mostly single and scattered, 15-17 μm in diameter, walls very thick, with indistinct pit canals. Bordered pitted vessels up to about 68 μm in diameter, with closely arranged bordered pits. Cell walls of xylem rays slightly thickened, densely pitted. Oil cells oblong, containing brown secretion.
(2) Macerate 1 g of the powder in 30 ml petroleum ether (30-60℃) for 30 min, ultrasonicate for 10 min (keep the temperature of the water bath lower than 30℃) and filter. Evaporate the filtrate to dryness, dissolve the residue in 1 ml ethyl acetate as the test solution. Prepare a solution of Radix Linderae reference drug in the same manner as the reference drug solution. Dissolve linderalactone CRS in ethyl acetate to produce a solution containing 0.75 mg per ml as the reference solution. Carry out the method for thin layer chromatography (Appendix Ⅵ D), using silica gel H as the coating substance and toluene and ethyl acetate (15∶1) as the mobile phase. Apply separately 4 μl test solution and reference drug solution, 3 μl reference solutionto the plate. After developing and removal of the plate, dry in air, spray with a 1% solution of vanillin in sulfuric acid. The spots in the chromatogram obtained with the test solution correspond in position and colour to the spots in the chromatograms obtained with the reference drug solution and reference solution.

Assay Carry out the method for high performance liquid chromatography (Appendix Ⅵ D).

Chromatographic system and system suitability Use octadecylsilane bonded silica gel as the stationary phase and a mixture of acetonitrile and water (56∶44) as the mobile phase. As detector a spectrophotometer set at 235 nm. The number of theoretical plates of the column is not less than 2000, calculated with the reference to the peak of linderalactone.

Reference solution Weigh accurately 10 mg of linderalactone CRS to a 100 ml volumetric flask, dissolve with methanol and dilute to volume, mix well. Transfer accurately 10 ml to a 25 ml volumetric flask and dilute with methanol to volume, mix well (40 μg of linderalactone per ml).

Test solution Place 1 g of the coarse powder, weighed accurately, into a Soxhlet's extractor, extract with 50 ml of ether for 4 hours, evaporate the extract to dryness. Dissolve the residues with several small quantities of methanol and transfer to a 50 ml volumetric flask, dilute with methanol to volume, mix well and filter, use the successive filtrate as the test solution.

Procedures Accurately inject 10 μl of each of the reference solution and the test solution, respectively, into the column, determine and calculate the content.
It contains not less than 0.030 per cent of linderane ($C_{15}H_{16}O_4$), calculated with reference to the dried drug.

Processing Eliminate foreign matter; for the unsliced drug, remove rootlets, grade according to size, soften thoroughly, cut into thin slices, and dry.

Action To smooth the flow of *qi* and relieve pain, and warm and tonify the kidney and urinary bladder.

Indications Distending pain in the chest and abdomen accompanied with dyspnea; enuresis and frequency of urination due to hypofunction of the urinary bladder; hernia; dysmenorrhea.

Usage and dosage 3-9 g.

Storage Preserve in a cool and dry place, protected from moth.

Radix Liriopes
(山麦冬, Shanmaidong)

Liriope Root Tuber

Liriope Root Tuber is the dried root tuber of *Liriope spicata* (Thunb.) Lour. var. *prolifera* Y. T. Ma or *Liriope muscari* (Decne.) Bailey (Fam. Liliaceae). The drug is collected in early summer, washed clean, exposed to strong sunlight repeatedly and piled up until almost dried, removed from fibrous root, and dried.

Description *Root of Liriope spicata* Fusiform, the two ends tapering, 1.2-3 cm long, 0.4-0.7 cm in diameter. Externally pale yellow to brownish-yellow, with irregular longitudinal wrinkles. Texture flexible, but hard and fragile after drying, fracture pale yellow to brownish-yellow, horny, stele small. Odour, slight; taste, sweet, sticky on chewing.

Root of Liriope muscari Slightly compressed, 2-5 cm long, 0.3-0.8 cm in diameter, with coarse longitudinal lines. Taste, sweet and slightly bitter.

Identification (1) Transverse section: *Root of Liriope muscari* Epidermis consisting of 1 layer of parenchymatous cells. Velamen of 1 layer of cells. Cortex broad, parenchymatous cells containing raphides of calcium oxalate, 27-60 μm long; endodermal cells with thickened and lignified walls, passage cells found, 1-2 layers of stone cells lying at the outside of endodermis, with thickened inner and lateral

walls, finely and densely pitted. Stele fairly small, phloem bundlles 7-15, each located between 2 xylem arms, respectively, the lignified cells in the inner side of xylem bundles linking up to a ring. Pith small, parenchymatous cells subrounded.

Root of Liriope muscari Velamen of 3-6 layers of lignified cells, raphides 25-46 μm long, the outside of endodermis showing 1 layer of stone cells, phloem bundles 16-20.
(2) View the thin piece under the ultraviolet light at 365 nm, a fluorescence with light blue colour appears.

Extractives Carry out the cold extraction method as described under the determination for water-soluble extractives (Appendix Ⅹ A), not less than 75.0 per cent.

Processing Eliminate foreign matter, wash clean, and dry.

Action To nourish *yin* and promote production of body fluids, moisten the lung, cool and refresh the heart.

Indications Dry cough caused by *lung-yin* deficiency, cough in consumptive diseases, fluid deficiency and thirst, dysphoria and insomnia, constipation due to fluid deficiency in intestines.

Usage and dosage 9-15 g.

Storage Preserve in a cool and dry place, protected from moisture.

Radix Morindae Officinalis (巴戟天, Bajitian)

Morinda Root

Morinda Root is the dried root of *Morinda officinalis* How (Fam. Rubiaceae). The drug is collected all the year round, removed from rootlet, dried in the sun partially, beaten gently to be compressed, and then dried in the sun.

Description Compressed-cylindrical, somewhat curved, varying in length, 0.5-2 cm in diameter. Externally greyish-yellow or dark grey, with longitudinal wrinkles and transverse cracks, some bark transversely broken and wood exposed. Texture tough, fracture bark thick, purple or purplish, easily separated from wood. Wood hard, yellowish-brown or yellowish-white, 1-5 mm in diameter. Odour, slight; taste, sweetish and slightly astringent.

Identification (1) Transverse section: Cork of several rows of cells. Stone cells single or several in groups in the outer part of phelloderm, interruptedly arranged in a ring. Parenchymatous cells containing raphides of calcium oxalate, arranged tangentially. Phloem broad, parenchymatous cells in the inner part containing raphides of calcium oxalate, arranged axially. Cambium distinct. Vessels in xylem single or 2-3 in group, arranged radially, up to 105 μm in diameter; xylem fibres developed; xylem rays 1-3 rows of cells wide; non-lignified wood parenchymatous cells found occasionally.
Powder: Purplish or purplish-brown. Stone cells yellowish, subrounded, subsquare, subrectangular, elongated or irregular-shaped, some of them tapered at one end, 21-96 μm in diameter, walls up to 39 μm thick, some with distinct striations, pits and pit-canals, some stone cells large and slightly thick-walled. Needle crystals of calcium oxalate mostly in raphides, up to 184 μm long. Bordered pitted vessels pale yellow, up to 105 μm in diameter, with fine and dense bordered pits. Fibre tracheids long-fusiform, bordered pits relatively large, pit apertures obliquely slit-shaped, V-shaped and cross-shaped.
(2) To 2.5 g of the powder add 25 ml of ethanol, heat under reflux for 1 hour, cool and filter. Evaporate the filtrate to about 1 ml as the test solution. Prepare a solution of 2.5 g of Radix Morindae Officinalis reference drug in the same manner as the reference drug solution. Carry out the method for thin layer chromatography (Appendix Ⅵ B), using silica gel GF_{254} as the coating substance and a mixture of toluene, ethyl acetate and formic acid (8∶2∶0.1) as the mobile phase. Apply separately to the plate 10 μl of each of the above two solutions. After developing and removal of the plate, dry in air. Examine under ultraviolet light at 254 nm. The spots in the chromatogram obtained with the test solution correspond in position and colour to the spots in the chromatogram obtained with the reference drug solution. Spray with a 5% solution of sodium hydroxide to the spots clear, the spots in both chromatograms show the same colours.

Water Carry out the method for determination of water (Appendix Ⅸ H, method 1), not more than 15.0 per cent.

Total ash Not more than 6.0 per cent (Appendix Ⅸ K).

Acid-insoluble ash Not more than 0.80 per cent (Appendix Ⅸ K).

Extractives Carry out the cold extraction method as described under the determination for water-soluble extractives (Appendix Ⅹ A), not less than 50.0 per cent.

Processing *Radix Morindae Officinalis* Eliminate foreign matter.

Radix Morindae Officinalis (*removed from wood*) Steam the clean Radix Morindae Officinalis as described under the method for steaming (Appendix Ⅱ D), remove the woody cores while hot, cut into sections, and dry.

Radix Morindae Officinalis (*processed with salt*) Steam the clean Radix Morindae Officianlis as described under the method for steaming with salt-water (Appendix Ⅱ D), until it is steamed thoroughly, remove the woody cores while hot, cut into sections and dry.

Radix Morindae Officinalis (*prepared*) Break Radix Glycyrrhizae to pieces and boil with some water. Remove the residue, add clean Radix Morindae Officinalis to the decoction and mix well, boil the mixture thoroughly as described under the method for boiling (Appendix Ⅱ D), remove the woody cores, cut into sections and dry, using 6 kg of Radix Glycyrrhizae per 100 kg of Radix Morindae Officinalis.

Action To reinforce *kidney-yang*, strengthen the tendons and the bones, and relieve rheumatic conditions.

Indications Impotence, seminal emission, infertility, menstrual disorders, pain and cold feeling in the lower abdomen; rheumatic arthralgia; atrophic tendons and bones.

Usage and dosage 3-9 g.

Storage Preserve in a ventilated dry place, protected from mould and moth.

Radix Ophiopogonis (麦冬, Maidong)

Dwarf Lilyturf Tuber

Dwarf Lilyturf Tuber is the dried root tuber of *Ophiopogon japonicus* (Thunb.) Ker-Gawl. (Fam. Liliaceae). The drug is collected in summer, washed clean, sun-dried and piled up

repeatedly until nearly dry, removed from rootlet, and dried.

Description Fusiform, with two ends slightly tapering, 1.5-3 cm long, 3-6 mm in diameter. Externally yellowish-white, finely wrinkled longitudinally. Texture tough, fracture yellowish-white, translucent, stele small. Odour, slightly aromatic; taste, sweetish and bitterish.

Identification (1) Transverse section: Epidermis consisting of 1 layer of cells. Velamen of 3-5 layers of lignified cells. Cortex broad, scattered with mucilage cells containing raphides of calcium oxalate, some needles up to 10 μm in diameter; endodermis with passage cells, endodermal cells with evenly thickened and lignified walls, and a layer of stone cells lying at the outside of endodermis, the inner and lateral walls thickened, finely and dosely pitted. Stele relatively small. Phloem bundles 16-22. Vessels, tracheids, fibres and lignified parenchymatous cells in the inner side of xylem bundles linking up to a ring. Pith small, parenchymatous cells subrounded.
(2) To 2 g, cut into pieces, add 20 ml of a mixture of chloroform and methanol (7 : 3), macerate for 3 hours, ultrasonicate for 30 minutes, cool and filter. Evaporate the filtrate to dryness, and dissolve the residue in 0.5 ml of chloroform as the test solution. Prepare a solution of 2 g of Radix Ophiopogonis reference drug in the same manner as the reference drug solution. Carry out the method for thin layer chromatography (Appendix Ⅵ B), using silica gel GF_{254} as the coating substance and a mixture of toluene, methanol and glacial acetic acid (80 : 5 : 0.1) as the mobile phase. Apply separately to the plate 10 μl of each of the above two solutions. After developing and removal of the plate, dry in air, examine under ultraviolet light at 254 nm. The spots in the chromatogram obtained with the test solution correspond in position and colour to the spots obtained with the reference drug solution.

Water Carry out the method for the determination of water (Appendix Ⅸ H, method 1), not more than 18.0 per cent.

Total ash Not more than 5.0 per cent (Appendix Ⅸ K).

Acid-insoluble ash Not more than 0.8 per cent (Appendix Ⅸ K).

Extractives Carry out the cold extraction method as described under the determination for water-soluble extractive (Appendix Ⅹ A), not less than 60.0 per cent.

Processing Eliminate foreign matter, wash clean, soften thoroughly, press to be flattened, and dry.

Action To nourish *yin* and promote the production of body fluids, moisten the lung, and anchor the mind.

Indications Dry cough, phthisical cough; thirst due to impairment of body fluids; fidgets and insomnia; wasting-thirst caused by internal *heat*; constipation; diphtheria.

Usage and dosage 6-12 g.

Storage Preserve in a cool and dry place, protected from moisture.

Radix Paeoniae Alba
(白芍, Baishao)

White Peony Root

White Peony Root is the dried root of *Paeonia lactiflora* Pall. (Fam. Ranunculaceae). The drug is collected in summer or autumn, washed clean, removed from two ends and rootlet, either peeled after boiling in water or boiled after peeling, and dried in the sun.

Description Cylindrical, straight or slightly curved, two ends truncate, 5-18 cm long, 1-2.5 cm in diameter. Externally whitish or pale reddish-brown, glossy or with longitudinal wrinkles, rootlet scars and occasional remains of brown cork. Texture compact, uneasily broken, fracture relatively even, whitish or pale brownish-red, cambium ring distinct and rays radial. Odour, slight; taste, slightly bitter and sour.

Identification (1) Powder: Yellowish-white. Masses of gelatinized starch granules fairly abundant. Clusters of calcium oxalate 11-35 μm in diameter, packed in parenchymatous cells, often arranged in a row, or several ones in a cell. Bordered pitted or reticulated vessels 20-65 μm in diameter. Fibres long fusiform, 15-40 μm in diameter, walls thickened, slightly lignified and large round-pitted.
(2) Shake 0.5 g of the powder with 10 ml of ethanol for 5 minutes and filter. Evaporate the filtrate to dryness and dissolve the residue in 1 ml of ethanol as the test solution. Dissolve paeoniflorin CRS in ethanol to produce a solution containing 1 mg per ml as the reference solution. Carry out the method for thin layer chromatography (Appendix Ⅵ B), using silica gel G as the coating substance and a mixture of chloroform, ethyl acetate, methanol and formic acid (40:5:10:0.2) as the mobile phase. Apply separately to the plate 10 μl of each of the two solutions. After developing and removal of the plate, dry in air and spray a with 5% solution of vanillin in sulfuric acid, heat to the spots distinct. The bluish-purple spot in the chromatogram obtained with the test solution corresponds in position and colour with the spot in the chromatogram obtained with the reference solution.

Heavy metals and harmful elements Carry out the methods for determinations of lead, cadmium, arsenic, mercury and copper (Appendix Ⅸ B, atomic absorption spectrophotometry, or inductively coupled plasma mass spectrometry), not more than 5 ppm of lead, 0.3 ppm of cadmium, 2 ppm of arsenic, 0.2 ppm of mercury and 20 ppm of copper.

Assay Carry out the method for high performance liquid chromatography (Appendix Ⅵ D).

Chromatographic system and system suitability Use octadecylsilane bonded silica gel as the stationary phase and a mixture of acetonitrile and 0.1% solution of phosphoric acid (14 : 86) as the mobile phase. As detector a spectrophotometer set at 230 nm. The number of theoretical plates of the column is not less than 2000, calculated with the reference to the peak of paeoniflorin.

Reference solution Weigh accurately a quantity of paeoniflorin CRS, dissolve in methanol to produce a solution containing 60 μg per ml.

Test solution Weigh accurately 0.1 g of the powder to a 50 ml volumetric flask, add 35 ml of dilute ethanol, ultrasonicate (power, 240 W; frequency, 45 kHz) for 30 minutes, cool and dilute with dilute ethanol to the volume, mix well, filter and use the successive filtrate as the test solution.

Procedure Inject accurately 10 μl of each of the reference solution and the test solution, respectivelty, into the column, and calculate the content.
It contains not less than 1.6 per cent of paeoniflorin ($C_{23}H_{28}O_{11}$), calculated with reference to the dried drug.

Processing *Radix Paeoniae Alba* Wash, soften thoroughly, cut into thin slices, and dry.

Radix Paeoniae Alba (stir-baked) Stir-bake the slices of Radix Paeoniae Alba as described under the method of simple stir-baking (Appendix Ⅱ D) until it becomes yellowish.

Radix Paeoniae Alba (stir-baked with wine) Stir-bake the slices of Radix Paeoniae Alba as described under the method of stir-baked with wine (Appendix Ⅱ D) until it becomes yellowish.

Action To subdue hyperactivity of the liver and relieve pain, nourish blood and regulate menstruation, and check excessive perspiration.

Indications Headache and dizziness; costal and abdominal pain; spasmodic pain of limbs; anemia; menstrual disorders; spontaneous sweating and night sweating.

Usage and dosage 6-15 g.

Precaution Incompatible with Rhizoma et Radix Veratri.

Storage Preserve in a dry place, protected from moth.

Radix Paeoniae Rubra (赤芍, Chishao)

Red Peony Root

Red Peony Root is the dried root of *Paeonia lactiflora* Pall. or *Paeonia veitchii* Lynch (Fam. Ranunculaceae). The drug is collected in spring and autumn, removed from rhizome, rootlet and dried in the sun.

Description Cylindrical, somewhat curved, 5-40 cm long, 0.5-3 cm in diameter. Externally brown, rough, longitudinally furrowed and wrinkled, and showing rootlet scars and transverse elongated lenticel-like protrusions, sometimes the outer bark easily exfoliated. Texture hard and fragile, easily broken, fracture chalk-white or pink, bark narrow, wood with distinct radial striations, sometimes with clefts. Odour, slight; taste, somewhat bitter, sour and astringent.

Identification (1) Transverse section: Cork consisting of a few layers of brown cells. Parenchymatous cells in cortex elongated tangentially. Phloem relatively narrow. Cambium in a ring. Xylem rays relatively broad, vessels arranged radially, accompanied by wood fibres. Parenchymatous cells containing clusters of calcium oxalate and starch granules.
(2) To 0.5 g of the powder add 10 ml of ethanol, shake thoroughly for 5 minutes, and filter. Evaporate the filtrate to dryness, and dissolve the residue in 2 ml of ethanol as the test solution. Dissolve paeoniflorin CRS in ethanol to produce a solution containing 2 mg per ml as the reference solution. Carry out the method for thin-layer chromatography (Appendix Ⅵ B), using silica gel G as the coating substance and a mixture of chloroform, ethyl acetate, methanol and formic acid (40∶5∶10∶0.2) as the mobile phase. Apply separately to the plate 4 μl of each of the two solutions. After developing and removal of the plate, dry in air. Spray with a 5% solution of vanillin in sulfuric acid, heat to the spots clear. The blue-purple spot in the chromatogram obtained with the test solution corresponds in position and colour to the spot in the chromatogram obtained with the reference solution.

Assay Carry out the method for high performance liquid chromatography (Appendix Ⅵ D).

Chromatographic system and system suitability Use octadecylsilane bonded silica gel as the stationary phase and a mixture of methanol and 0.05 mol/L potassium dihydrogen phosphate (40∶65) as the mobile phase. As detector a spectrophotometer set at 230 nm. The number of theoretical plates of the column is not less than 3000, calculated with the reference to the peak of paeoniflorin.

Reference solution Weigh accurately a quantity of paeoniflorin CRS, previously dried over phosphorous pentoxide under reduced pressure for 36 hours, dissolve in methanol to produce a solution containing 0.5 mg per ml.

Test solution Weigh accurately 0.5 g of the coarse powder to a stopper conical flask, accurately add 25 ml of methanol and weigh, macerate for 4 hours, ultrasonicate for 20 minutes, allow to cool, weigh again, replenish the loss of the solvent and mix well, filter, use the filtrate as the test solution.

Procedures Accurately inject 10 μl of each of the reference solution and the test solution, respectively, into the column, determine and calculate the content.
It contains not less than 1.8 per cent of paeoniflorin ($C_{23}H_{28}O_{11}$).

Processing Eliminate foreign matter. Grade according to size, wash clean, soften thoroughly, cut into thick slices, and dry.
Occurring in subrounded slices, 0.5-3 cm in diameter, 0.3-0.5 cm thick, edge brown, cut surface yellowish-white or pink, bark narrow, wood radial-striated distinctly, sometimes cleft. Carry out the method of Assay mentioned above, containing not less than 1.5 per cent of paeoniflorin ($C_{23}H_{28}O_{11}$).

Action To remove *heat* from blood, eliminate blood stasis, and relieve pain.

Indications Maculation in epidemic diseases; spitting of blood, epistaxis; inflammation of the eye; pain in the chest and costal regions; amenorrhea, dysmenorrhea; mass formation in the abdomen; traumatic injuries; boils and sores.

Usage and dosage 6-12 g.

Precaution Incompatible with Rhizoma et Radix Veratri.

Stroage Preserve in a ventilated dry place.

Radix Panacis Quinquefolii (西洋参, Xiyangshen)

American Ginseng

American Ginseng is the dried root of *Panax quinquefolium* L. (Fam. Araliaceae). All the comme-rcial supplies are obtained from cultivated forms. The drug is collected in autumn, washed clean, and dried in the sun or at a lower temperature.

Description Fusiform, cylindrical or conical, 3-12 cm in length, 0.8-2 cm in diameter. Externally pale yellowish-brown or yellowish-white, exhibiting transverse-striations and linear lenticel-like protrudings, and showing fine and dense longitudinal wrinkles, and rootlet scars. The middle and lower part of the main root with 1 to several lateral roots, mostly broken off. Sometimes, the upper part with rhizome (lutou) showing distinct annulations, rounded or semi-rounded stem scars (luwan), and bearing adventitious roots (Ding) or broken off. Texture heavy and hard, uneasily broken, fracture even, yellowish-white, slightly starchy, bark exhibiting yellowish-brown dotted resin canals, cambium ring brownish-yellow, wood exhibiting

less distinct radiate striations. Odour, slight and characteristic; taste, slightly bitter and sweet.

Identification To 1 g, in powder, add 25 ml of methanol, heat under reflux for 1 hour, allow to cool, filter, evaporate the filtrate to dryness. Dissolve the residue in 20 ml of water, extract by shaking with two 10-ml quantities of ether. Discard the ether extract, extract the water layer with three 15-ml quantities of *n*-butanol saturated with water. Combine the *n*-butanol extracts, wash with two 10-ml quantities of water. Separate the *n*-butanol layer, evaporate to dryness, dissolve the residue in 1 ml of methanol as the test solution. Prepare a solution of 1 g of Radix Panacis Quinquefolii reference drug in the same manner as the reference drug solution. Dissolve separately a quantity of pseudoginsenoside F_{11} CRS, ginsenosides Rb_1, Re, Rg_1 CRS in methanol to produce four solutions each containing 2 mg per ml as the reference solutions. Carry out the method for thin layer chromatography (Appendix Ⅵ B), using silica gel G as the coating substance and the lower layer of a mixture of chloroform, ethyl acetate, methanol and water (15∶40∶22∶10, standing for 12 hours at 5-10℃) as the mobile phase. Apply separately to the plate 2 μl of each of the above six solutions. After developing and removal of the plate, dry in air. Spray with a 10% solution of sulfuric acid in ethanol, heat at 105℃ to the spots distinct. Examine in daylight and under ultraviolet light at 365 nm. The spots or fluorescent spots in the chromatogram obtained with the test solution correspond in position and colour to the spots in the chromatogram obtained with the reference drug solution and reference solutions.

Water Carry out the method for determination of water (Appendix Ⅸ H, method 1), not more than 13.0 per cent.

Total ash Not more than 5.0 per cent (Appendix Ⅸ K).

Acid-insoluble ash Not more than 1.0 per cent (Appendix Ⅸ K).

Radix Ginseng Use 1 g of Radix Ginseng reference drug, carry out the method described under the test of Identification to produce a reference drug solution. Carry out the method for thin layer chromatography (Appendix Ⅵ B), using silica gel G as the coating substance and the lower layer of a mixture of chloroform, methanol and water (13∶7∶2, standing for 12 hours at 5-10℃) as the mobile phase. Apply separately to the plate 2 μl of each of the test solution obtained under the test of Identification and the above reference drug solution. After developing and removal of the plate, dry in air. Spray with a 10% solution of sulfuric acid in ethanol, heat at 105℃ to spots distinct. Examine in daylight and ultraviolet light at 365 nm. The chromatogram obtained with the test solution should not be completely same as the chromatogram obtained with the reference drug solution.

Heavy metals and harmful elements Carry out the methods for determinations of lead, cadmium, arsenic, mercury and copper (Appendix Ⅸ B, atomic absorption spectrophotometry, or inductively coupled plasma mass spectrometry), not more than 5 ppm of lead, 0.3 ppm of cadmium, 2 ppm of arsenic, 0.2 ppm of mercury and 20 ppm of copper.

Extractives Carry out the method for determination of ethanol-soluble extractives (Appendix Ⅹ A, the hot extraction method), using ethanol as the solvent, not less than 30.0 per cent.

Assay Carry out the method for high performance liquid chromatography (Appendix Ⅵ D).

Chromatographic system and system suitability Use octadecylsilane bonded silica gel as the stationary phase, acetonitrile as the mobile phase A and 0.1% solution of phosphoric acid as the mobile phase B, elute in gradient as the following:

Time (min)	Mobile phase A (per cent v/v)	Mobile phase B (per cent v/v)
0-25	19→20	81→80
25-60	20→40	80→60
60-90	40→55	60→45
90-100	55→60	45→40

As detector a spectrophotometer set at 203 nm, maintain the column temperature at 40℃. The number of theoretical plates of the column is not less than 5000, calculated with the reference to the peak of ginsenoside Rb_1.

Reference solution Dissolve ginsenosides Rg_1, Re and Rb_1 CRS, accurately weighed, in methanol to produce a mixture containing 0.1, 0.4 and 1.0 mg of each per ml as the reference solution.

Test solution Weigh accurately 1 g of the powder (through No. 3 sieve) to a stoppered conical flask, accurately add 50 ml of *n*-butanol saturated with water and weigh. Heat under reflux on a water bath for 1.5 hours, cool and weigh again, replenish the loss of solvent with *n*-butanol saturated with water, mix well and filter. Evaporate accurately 25 ml of the successive filtrate to dryness in an evaporating dish, dissolve the residue in 50% methanol, transfer to a 10 ml volumetric flask, dilute with 50% methanol to volume and mix well.

Procedure Inject accurately 10 μl of each of the reference solution and the test solution, respectively, into the column, and calculate the content.

It contains not less than 2.0 per cent of the total amount of ginsenoside Rg_1 ($C_{42}H_{72}O_{14}$), ginsenoside Re ($C_{48}H_{82}O_{18}$) and ginsenoside Rb_1 ($C_{54}H_{92}O_{23}$), calculated with reference to the dried drug.

Processing Remove rhizome (Lutou), soften thoroughly, cut into thin slices, dry, or pound to pieces before use.

Action To tonify *qi* and nourish *yin*, remove *heat* and promote the production of body fluids.

Indications Used for deficiency of *qi* and *yin*, internal-*heat*, cough and asthma, bloody phlegm, *fire* in the deficiency syndrome, dysphoria and tiredness, diabetes, dry and thirsty mouth and throat.

Usage and dosage 3-6 g.

Precaution Incompatible with Rhizoma et Radix Veratri.

Storage Preserve in well closed containers, stored in a cool and dry place, protected from moth.

Radix Peucedani (前胡, Qianhu)

Hogfennel Root

Hogfennel Root is the dried root of *Peucedanum praeruptorum* Dunn (Fam. Umbelliferae). The drug is collected in winter to next spring, when stem and leaves wither or before floral stem grows, removed from rootlet, washed clean and dried in the sun or at a lower temperature.

Description Irregular cylindrical, conical or fusiform,

slightly twisted, the lower part frequently branched, 3-15 cm long, 1-2 cm in diameter. Externally blackish-brown or greyish-yellow, frequently with stem scars and fibrous remains of pericladia at the root stock, with numerous fine annular striations at the upper end, and longitudinal furrows or wrinkles and transverse lenticel-like cicatrices at the lower part. Texture relatively flexible, hard when dried, easily broken, fracture uneven, pale yellowish-white, numerous brownish-yellow oily spots scattered in bark, cambium ring brown, rays radiated. Odour, aromatic; taste, slightly bitter and pungent.

Identification To 0.5 g of the powder, add, 10 ml of chloroform, ultrasonicate for 10 minutes and filter. Evaporate the filtrate to dryness, and dissolve the residue in 5 ml of methanol as the test solution. Dissolve a quantity of praeruptorin A CRS in methanol to produce a solution containing 0.5 mg per ml as the reference solution. Carry out the method for thin layer chromatography (Appendix VI B), using silica gel GF_{254} as the coating substance and a mixture of petroleum ether (60-90℃) and ethyl acetate (3:1) as the mobile phase. Apply separately to the plate 5 μl of each of the above two solutions. After developing and removal of the plate, dry in air. Examine under ultraviolet light at 254 nm. The spot in the chromatogram obtained with the test solution corresponds in position and colour to the spot obtained with the reference solution.

Water Carry out the method for determination of water (Appendix IX H, method 1), not more than 12.0 per cent.

Total ash Not more than 8.0 per cent (Appendix IX K).

Acid-insoluble ash Not more than 2.0 per cent (Appendix IX K).

Extractives Carry out the cold maceration method as described under the determination of ethanol-soluble extractives (Appendix X A), using dilute ethanol TS as the solvent; not less than 20.0 per cent.

Assay Carry out the method for high performance liquid chromatography (Appendix VI D).

Chromatographic system and system suitability Use octadecylsilane bonded silica gel as the stationary phase and a mixture of methanol and water (75:25) as the mobile phase. As detector a spectrophotometer set at 321 nm. The number of theoretical plates of the column is not less than 3000, calculated with the reference to the peak of praeruptorin A.

Reference solution Weigh accurately a quantity of praeruptorin A CRS, dissolve in methanol to produce a solution containing 50 μg per ml.

Test solution Weigh accurately 0.5 g of the powder to a stopper conical flask, add accurately 25 ml of chloroform and weigh. Ultrasonicate (power 250 W, frequency 33 kHz) for 10 minutes, cool and weigh again, replenish the loss of solvent with chloroform, mix well and filter. Evaporate accurately 5 ml of the successive filtrate to dryness, dissolve the residue in methanol, transfer to a 25 ml volumetric flask, dilute with chloroform to volume and mix well.

Procedure Inject accurately 10 μl of each of the reference solution and the test solution, respectively, into the column, and calculate the content.

It contains not less than 0.90 per cent of praeruptorin A ($C_{21}H_{22}O_7$), calculated with reference to the dried drug.

Processing *Radix Peucedani* Eliminate foreign matter, wash clean, soften thoroughly, cut into thin slices, and dry in the sun.

Radix Peucedani (processed with honey) Stir-bake the slices of Radix Peucedani as described under the method for stir-baking with honey (Appendix II D) until not sticky to fingers.

Action To dispel *wind* and remove *heat*, and relieve cough and resolve phlegm.

Indications Cough and dyspnea in respiratory tract infection with expectoration of copious or yellowish sticky.

Usage and dosage 3-9 g.

Storage Preserve in a cool and dry place, protected from mould and moth.

Radix Physochlainae (华山参, Huashanshen)

Funneled Physochlaina Root

Funneled Physochlaina Root is the dried root of *Physochlaina infundibularis* Kuang (Fam. Solanaceae). The drug is collected in spring, removed from rootlet, washed clean, and dried in the sun.

Description Long conical or cylindrical, slightly curved, some branched, 10-20 cm long, 1-2.5 cm in diameter. Externally brownish, showing yellowish-white transverse lenticel-like protrusions, rootlet scars and longitudinal wrinkles, appearing annulated rings on the upper part. At the top usually showing 1 to several rhizomes exhibiting some stem scars and warts. Texture hard, fracture whitish or yellowish-white, bark narrow, wood broad, with fine and dense striations arranged radially. Odour, tobacco-like; taste, bitterish and slight numb.

Identification (1) Transverse section: Cork of several to over 10 layers of cells, the outermost ones yellowish-brown. Cambium ring distinct. Xylem occupying the majority of a root, vessels several in group, some of them accompanied by fine sieve tubes, known as interxylary phloem. Xylary parenchyma and rays showing cells containing sand crystals. Sometimes vessels and groups of vessels near the centre surrounded by several up to more than 10 layers of brown, flattened and suberized cells, containing yellowish-brown contents. Parenchymatous cells filled with starch granules, some containing sand crystals of calcium oxalate.

Powder: Greyish-white. Starch granules fairly abundant, simple granules subspheroidal or hemispheroidal, 3-15 μm in diameter, hilum pointed, cleft or Y-shaped, compound granules of 2-4 components. Sand crystals mostly embedded in parenchymatous cells. Reticulated vessels 17-85 μm in diameter.

(2) To 4 g of the fine powder add 15 ml of 85% ethanol, shake for 15 minutes and filter. Evaporate the filtrate to dryness, add 2 ml of 1% sulfuric acid solution, stir and filter. Adjust the filtrate to alkaline by adding ammonia TS, then extract by shaking with 2 ml of chloroform. Evaporate the chloroform extract to dryness, to the residue add 5 drops of fuming nitric acid, evaporate to dryness, cool, add 3-4 drops of ethanolic potassium hydroxide TS and a small piece of potassium hydroxide; a violet colour is produced.

(3) Moisten 1 g of the medium powder with 2 ml of the mixture of strong ammonia TS-ethanol (1:1), and add 20 ml of chloroform, heat under reflux on a water bath for 1 hour, and filter. Evaporate the filtrate carefully to dryness, and add chloroform to 1 ml as the test solution. Dissolve atropine sulfate CRS, scopolamine hydrobromide CRS, anisodamine hydrobromide CRS, and scopoletin CRS in ethanol to produce a mixture containing 1 mg of each per ml as the reference solution. Carry out the method for thin layer chromatography (Appendix VI B), using silica gel G as the

coating substance and a mixture of ethyl acetate, methanol and strong ammonia TS (17 : 2 : 1) as the mobile phase. Apply separately to the plate 5 μl of each of the two solutions. After developing and removal of the plate, dry in air, examine under ultraviolet light at 365 nm. The bluish-white fluorenscent spot (scopoletin) in the chromatogram obtained with the test solution corresponds in position and colour to the spot obtained with the reference solution. Spray successively with potassium iodobismuthate TS and ethanolic sodium nitrite TS. The four brown spots in the chromatogram obtained with the test solution correspond in position and colour to the spots in the chromatogram obtained with the reference solution.

Assay *Reference solution* Weigh accurately atropine sulfate CRS, dried previously to constant weight at 120℃, add water to prepare a solution equalling to 75 μg of hyoscyamine per ml as the reference solution.

Test solution Weigh accurately 0.25 g of the midium powder to a stopper conical flask, add accurately 25 ml of citric acid-sodium dihydrogen phosphate BS (pH 4.0), shake for 5 minutes, and allow to stand overnight. Filter with dried filter paper, use the successive filtrate as the test solution.

Procedure Measure accurately 2 ml of each of the test and reference solution to separating funnels respectively, to each funnel add accurately 10 ml of citric acid-sodium dihydrogen phosphate BS (pH 4.0) and 2 ml of 0.04% bromocresol green solution prepared with the above BS separately, mix well, extract by shaking with 10 ml of chloroform for 5 minutes. After demixing, separate the chloroform layer, filter with the filter paper moisten with chloroform to 25 ml volumetric flasks respectively. Extract again with three 5-ml quantities of chloroform, filter to the same flasks in portions, wash the filter paper with chloroform and filter into the flasks, dilute to volume. Carry out the method for ultraviolet spectrophotometry and colourimetry (Appendix Ⅴ B), measure the absorbance at 415 nm, respectively, and calculate.

It contains not less than 0.20 per cent of alkaloids, calculated as hyoscyamine ($C_{17}H_{23}NO_3$).

Processing Eliminate foreign matter, wash clean, and dry. Break to pieces before use.

Action To relieve asthma and cough, and to induce sedation.

Indications Cough and asthma with thin expectoration; palpitation and insomnia.

Usage and dosage 0.1-0.2 g.

Precaution Overdosage may cause intoxication. Contraindicated for patients with glaucoma. Used with caution in pregnancy and in the patients with marked prostatomegaly.

Storage Preserve in a ventilated dry place, protected from moth.

Preparation Funneled Physochlaina Tablets

Radix Phytolaccae (商陆, Shanglu)

Pokeberry Root

Pokeberry Root is the dried root of *Phytolacca acinosa* Roxb. or *Phytolacca americana* L. (Fam. Phytolaccaceae). The drug is collected from autumn to next spring, removed from rootlet and soil, cut into slice or piece, and dried in the sun or in the shade.

Description Irregular slices or pieces cut transversely or longitudinally, varying in thickness. The outer bark greyish-yellow or greyish-brown. Transversely cut pieces tortuous, with shrunken edges, 2-8 cm in diameter. Cut surface pale yellowish-brown or yellowish-white, wood prominent, forming several bulged concentric rings. Longitudinally cut pieces curved or rolled, 5-8 cm long, 1-2 cm wide, wood showing parallel, bulged stripes. Texture hard. Odour, slight; taste, slightly sweet and numb after chewing for a long time.

Identification Transverse section of root:

Root of Phytolacca acinosa Cork consisting of several to over 10 layers of cells; cortex narrow. Fibro-vascular tissue forming tertiary structure, with several concentric cambium rings, each having dozens of vascular bundles. Phloem at the outer side of vascular bundles, xylem at the inner side, woody fibres numerous, often several ones grouped or around the vessels. Parenchymatous cells containing raphides of calcium oxalate, a few containing prisms or clusters of calcium oxalate, also containing starch granules. Powder: Greyish-white. Needle crystals of calcium oxalate in bundles or scattered throughout, needle crystals fine, raphides 40-72 μm long; prisms or clusters of calcium oxalate observed. woody fibres mostly in bundles, 10-20 μm in diameter, walls thickened or slightly thickened with numerous X-shaped pits. Cork cells brownish-yellow, rectangular or polygonal, some containing granules. Starch granules simple, subrounded or oblong, 3-28 μm in diameter, hilum cleft-like, pointed, stellate, and V-shaped, striations indistinct; compound granules rare, of 2-3 components.

Root of Phytolacca americana Raphides of calcium oxalate relatively long, up to 96 μm; prisms and clusters absent.

Foreign matter Not more than 2 per cent (Appendix Ⅸ A).

Water Carry out the method for the determination of water (Appendix Ⅸ H, Method 1), not more than 13.0 per cent.

Acid-insoluble ash Not more than 2.5 per cent (Appendix Ⅸ K).

Extractives Carry out the method for determination of water-soluble extractives (Appendix Ⅹ A, the cold extraction method), not less than 10.0 per cent.

Processing *Radix Phytolaccae* Eliminate foreign matter, wash clean, soften thoroughly, cut into thick slices or pieces, and dry.

Radix Phytolaccae (*processed with vinegar*) Stir-bake the clean Radix Phytolaccae as described under the method for stir-baking with vinegar (Appendix Ⅱ D) to dryness, using 30 kg of vinegar per 100 kg of Radix Phytolaccae.

Action To cause drastic purgation and induce urination, counteract *toxicity*, and reduce nodulation.

Indications Anasarca with oliguria and constipation; external use for carbuncles and sores.

Usage and dosage 3-9 g; for external use appropriate quantity of the fresh root is pounded into paste, or the dried root is ground into powder and applied topically.

Precaution Contraindicated in pregnancy.

Storage Preserve in a dry place, protected from mould and moth.

Radix Platycodonis (桔梗, Jiegeng)

Platycodon Root

Platycodon Root is the dried root of *Platycodon grandiflorum* (Jacq.) A. DC. (Fam. Campanulaceae). The drug is collected in spring and autumn, washed clean, removed from rootlet, peeled when fresh or unpeeled, and dried.

Description Cylindrical or slightly fusiform, gradually becoming tapering downwards, some branched, slightly twisted, 7-20 cm long, 0.7-2 cm in diameter. Externally white or pale yellowish-white, or yellowish-brown to greyish-brown when unpeeled; longitudinally twisted-furrowed, with transverse lenticel-like scars and branch root scars, and with transverse striations at the upper part. Sometimes the apex showing a relatively short or inconspicuous rhizome, which is marked by several crescent-shaped stem scars. Texture fragile, fracture uneven, cambium ring brown, bark whitish, with cleft, wood pale yellowish-white. Odour, slight; taste, slightly sweet and then bitter.

Identification (1) Transverse section: Cork cells remaining occasionally, showing cork layers when unpeeled, cork cells containing small prisms of calcium oxalate. Phelloderm narrow, often with clefts. Phloem scattered with laticiferous tube groups, walls somewhat thickened, containing fine granular yellowish brown contents. Cambium in a ring. Xylem vessels singly scattered or aggregated in groups of several vessels, arranged radiately. Parenchymatous cells containing inulin.
(2) Mount the section of dried drug with dilute glycerin, examine microscopically, fan-shaped or subrounded crystals of inulin are visible.
(3) To 1 g of the powder, add 20 ml of the mixture of 7% ethanolic sulfuric acid and water (1∶3), heat under reflux for 3 hours and allow to cool. Extract with 2 quantities, each of 20 ml, of chloroform. Combine the chloroform extracts and wash it with 30 ml of water, discard the washings. Dehydrate the chloroform solution with anhydrous sodium sulfate and filter. Evaporate the filtrate to dryness, dissolve the residue in 1 ml of methanol as the test solution. Prepare a solution of 1 g of Radix Platycodonis reference drug in the same manner as the reference drug solution. Carry out the method for thin layer chromatography (Appendix Ⅵ B), using silica gel G as the coating substance and a mixture of chloroform and ether (1∶1) as the mobile phase. Apply separately 10 μl of each of the two solutions to the plate. After developing and removal of the plate, dry in air, spray with 10% solution of sulfuric acid in ethanol and heat at 105℃ until the spots appear distinctly. The spots in the chromatogram obtained with the test solution correspond in position and colour to the spots in the chromatogram obtained with the reference drug solution.

Assay Weigh accurately about 4 g of the powder to a Soxhlet's extractor, macerate in 25 ml of methanol for 15 hours, add further 25 ml of methanol, heat under reflux for 6 hours, allow to stand over night, filter. Evaporate the filtrate to 15-20 ml, cool, add 50 ml of ether, shake and allow to stand. Discard the supernatant solution and dissolve the precipitate on heating with 20, 10 and 5 ml of methanol successively, cool, filter. Combine the methanol solutions, concentrate to 15-20 ml, cool, add 50 ml of ether, shake, then treat in the same manner. Combine the methanol solutions, transfer to a tared evaporating dish, evaporate to dryness on a water bath, dry at 105℃ to constant weight, calculate the content of total Platycodon saponins.
It contains not less than 6.0 per cent of total Platycodon saponins.

Processing Eliminate the foreign matter, wash clean, soften thoroughtly, cut into thick slices, and dry.
Occurring in oblique elliptical or irregular thin slices, mostly peeled off or occasionally with patches of cork adhering. In cut surface bark pale yellowish-white, a cambium ring distinct, brownish, wood broad, much cleft. Texture fragile, easily broken. Carry out the method of Assay mentioned above, containing not less than 5.5 per cent of total platycodon saponins.

Action To relieve cough, ease sore throat, and promote phlegm expectoration and drainage of pus.

Indications Cough with much phlegm, sore throat, hoarseness; pulmonary abscesses with pus running abscess difficult to burst after suppuration.

Usage and dosage 3-9 g.

Storage Preserve in a ventilated dry place, protected from moth.

Radix Polygalae (远志, Yuanzhi)

Thinleaf Milkwort Root

Thinleaf Milkwort Root is the dried root of *Polygala tenuifolia* Willd. or *Polygala sibirica* L. (Fam. Polygalaceae). The drug is collected in spring or autumn, removed from rootlet and soil, and dried in the sun.

Description Cylindrical, somewhat curved, 3-15 cm long, 3-8 mm in diameter. Externally greyish-yellow to greyish-brown, with dense and dented transverse wrinkles, longitudinal wrinkles and fissures, old roots with dense and deeply dented transverse wrinkles, somewhat nodular. Texture hard and fragile, easily broken, fracture brownish-yellow in bark, yellowish-white in wood, bark easily separating from wood. Odour slight; taste, bitter and slightly pungent, with an irritative sensation in the throat on chewing.

Identification (1) Transverse section: Cork of 10 or more rows of cells. Phelloderm of 20 or more rows of parenchymatous cells, tangentially cleft. Phloem relatively broad, usually radial cleft. Cambium in a ring. Xylem well-developed, all lignified, rays 1-3 rows of cells wide. Parenchymatous cells mostly containing fatty oil drops; some containing clusters and prisms of calcium oxalate.
(2) To 1 g of the powder add 20 ml of hydrochloric acid in absolute ethanol (10 → 100), heat under reflux for 30 minutes, allow to cool and filter. Add 30 ml of water in the filtrate, extract by shaking with two 20-ml quantities of chloroform, combine chloroform extracts and evaporate to dryness. Dissolve the residue in 1 ml of ethyl acetate, centrifuge, use the supernatant as the test solution. Prepare a solution of 1 g of Radix Polygalae reference drug in the same manner as the reference drug solution. Carry out the method for thin layer chromatography (Appendix Ⅵ B), using silica gel G as the coating substance and a mixture of toluene, ethyl acetate and formic acid (14∶4∶0.5) as the mobile phase. Apply separately to the plate 2 μl of each of

the two solutions. After developing and removal of the plate, dry in air, spray with a 10% solution of sulfuric acid in ethanol, heat at 105℃ to visualize clearly. The major spots in the chromatogram obtained with the test solution correspond in position and colour to the major spots in the chromatogram obtained with the reference drug solution.

Water Carry out the method for determination of water (Appendix Ⅸ H, method 1), not more than 12.0 per cent.

Total ash Not more than 6.0 per cent (Appendix Ⅸ K).

Acid-insoluble ash Not more than 1.5 per cent (Appendix Ⅸ K).

Extractives Weigh accurately 4 g of the coarse powder, add 40 ml of petroleum ether (30-60℃), heat under reflux for 1 hour, filter and wash the drug residue with a quantity of petroleum ether (30-60℃), discard the petroleum ether solution and evaporate the drug residue to dryness. Carry out the method for determination of ethanol-soluble extractives (Appendix Ⅹ A, the hot extraction method), using 70% ethanol as the solvent, not less than 20.0 per cent.

Assay Carry out the method for high performance liquid chromatography (Appendix Ⅵ D).

Chromatographic system and system suitability Use octadecylsilane bonded silica gel as the stationary phase and a mixture of methanol and 0.2% solution of phosphoric acid (70∶30) as the mobile phase. As detector a spectrophotometer set at 210 nm. The number of theoretical plates of the column is not less than 2500, calculated with the reference to the peak of polygalacic acid.

Reference solution Weigh accurately a quantity of polygalacic acid CRS, dissolve in methanol to produce a solution containing 80 μg per ml.

Test solution Weigh accurately 1 g of the powder (through No. 4 sieve) to a Soxhlet's extractor, macerate with a quantity of methanol for 30 minutes and heat under reflux on a water bath for 5 hours. Evaporate the extracts to dryness, add 20 ml of 10% solution of hydrochloric acid to the residue and heat slightly to dissolve, hydrolyze on a water bath for 2 hours, take out, cool and filter. Wash the precipitate with water to neutral, dissolve the residue with methanol and transfer to a 100 ml volumetric flask, dilute with methanol to volume and mix well.

Procedure Inject accurately 10 μl of the reference solution and 5-10 μl of the test solution, respectively, into the column, and calculate the content.
It contains not less than 0.70 per cent of polygalacic acid ($C_{29}H_{44}O_6$), calculated with reference to the dried drug.

Processing *Radix Polygalae* Eliminate foreign matter, wash briefly, soften thoroughly, cut into sections, and dry.

Radix polygalae (prepared) Decoct Radix Glycyrrhizae with a quantity of water, remove the residue. Add clean Radix Polygalae, decoct gently until the liquid is exhausted, and dry, using 6 kg of Radix Glycyrrhizae for 100 kg of Radix Polygalae.

Action To anchor the mind, promote phlegm expectoration, and to cause subsidence of swelling.

Indications Insomnia, dream-disturbed sleep, forgetfulness, palpitation, and trance due to incoordination between the heart and kidney; cough with sputum difficult to expectorate; boils and sores, swelling and pain in the breast.

Usage and dosage 3-9 g.

Storage Preserve in a ventilated dry place.

Preparation Thinleaf Milkwort Liquid Extract

Radix Polygoni Multiflori (何首乌, Heshouwu)

Fleeceflower Root

Fleeceflower Root is the dried root tuber of *Polygonum multiflorum* Thunb. (Fam. Polygonaceae). The drug is collected in autumn and winter when leaves wither, removed from two ends, washed clean, and the large one cut into pieces, and then dried.

Description Mass or irregular fusiform, 6-15 cm long, 4-12 cm in diameter. Externally reddish-brown, shrunken and uneven, shallowly grooved, with transverse elongated lenticel-like protrusions and fine rootlet scars. Texture heavy, compact, uneasily broken, fracture pale yellowish-brown or reddish-brown, starchy, bark exhibiting 4-11 subrounded rings of abnormal vascular bundles, forming brocaded patterns, wood in central part relatively large, some having a woody core. Odour, slight; taste, bitterish, sweetish and astringent.

Identification (1) Transverse section: Cork consisting of several layers of cells, filled with brown contents. Phloem relatively broad, scattered with 4-11 subrounded abnormal vascular bundles of collateral type, vessels rare. In the central part of a root cambium in a ring; vessels in xylem less, surrounded by some tracheids and a few xylem fibres. Parenchymatous cells containing starch granules, and clusters of calcium oxalate.
Powder: Yellowish-brown. Simple starch granules subrounded, 4-50 μm in diameter, hilum V-shaped, stellate or Y-shaped, striations of large ones fairly distinct; compound granules of 2-9 components. Clusters of calcium oxalate 10-80 (160) μm in diameter, and clusters jointed with prisms occasionally found. Brown cells subrounded or elliptical, walls slightly thickened, lumina filled with yellowish-brown, brown or reddish-brown contents, and containing starch granules; bordered pitted vessels 17-178 μm in diameter. Brown masses scattered, varying in shape, size and colour.
(2) To 0.25 g of the powder add 50 ml of ethanol, heat under reflux on a water bath for 1 hour, and filter. Concentrate the filtrate to 3 ml, used as the test solution. Prepare a solution of 0.25 g of Radix Polygoni Multiflori reference drug in the same manner as the reference drug solution. Carry out the method for thin layer chromatography (Appendix Ⅵ B), using silica gel H mixed with sodium carboxymethylcellulose as the coating substance and a mixture of benzene and ethanol (2∶1) as the mobile phase. Apply separately to the plate 2 μl of each of the two solutions in strips. After developing about 3.5 cm from the base line and removal of the plate, dry in air, then develop again using a mixture of benzene and dehydrated ethanol (4∶1) as the second mobile phase; after developing over a path of about 7 cm, removal of the plate, dry in air, and examine under ultraviolet light at 365 nm. The fluorescent strips in the chromatogram obtained with the test solution correspond in position and colour to the strips in the chromatogram obtained with the reference drug solution. Then spray with phosphomolybdic acid solution in sulfuric acid (dissolve 2 g phosphomolybdic acid in 20 ml of water, add 30 ml of sulfuric acid slowly, and mix well) and heat gently, examine immediately under ultraviolet light at 365 nm. The strips in the chromatogram obtained with the test solution correspond in position and colour to the strips in the

chromatogram obtained with the reference drug solution.

Assay Operate protected from light. Carry out the method for high performance liquid chromatography (Appendix VI D).

Chromatographic system and system suitability Use octadecylsilane bonded silica gel as the stationary phase and a mixture of acetonitrile and water (25 : 75) as the mobile phase. As detector a spectrophotometer set at 320 nm. The number of theoretical plates of the column is not less than 2000, calculated with the reference to the peak of 2,3,5,4′-tetrahydroxystilbene-2-*O*-β-D-glucoside.

Reference solution Weigh accurately a quantity of 2,3,5,4′-tetrahydroxystibene-2-*O*-β-D-glucoside CRS, dissolve in dilute ethanol to produce a solution containing 0.2 mg per ml as the reference solution.

Test solution Weigh accurately 0.2 g of the powder (through No. 4 sieve) to a conical flask, add accurately 25 ml of dilute ethanol and weigh, heat under reflux on a water bath for 30 minutes, allow to cool, weigh again, replenish the loss of the solvent and mix well, then filter the supernatant with millipore (0.45 μm).

Procedures Accurately inject 10 μl of each of the reference solution and the test solution, respectively, into the column, determine and calculate the content.
It contains not less than 1.0 per cent of 2,3,5,4′-tetrahydroxystibene-2-*O*-β-D-glucoside ($C_{20}H_{22}O_9$).

Processing Eliminate foreign matter, wash, macerate, soften thoroughly, cut into thick slices or sections, and dry.

Action To counteract *toxicity*, cure carbuncles, and relax bowels.

Indications Lymphadentitis, carbuncles, urticaria with itching; constipation; hyperlipemia.

Usage and dosage 6-12 g.

Storage Preserve in a dry place, protected from moth.

Radix Polygoni Multiflori Praeparata cum Succo Glycines Sotae (制何首乌, Zhiheshouwu)

Prepared FLeeceflower Root

The drug is the processed Radix Polygoni Multiflori.

Procedure Mix the slices or pieces of Radix Polygoni Multiflori thoroughly with black bean juice. Carry out the stewing method (Appendix II D) in a suitable non-ferrous container until the juice is exhausted or carry out the steaming method (Appendix II D), steam it alone or steam it after being mixed with black bean juice to a brown colour on all sides, dry in the sun to partial dryness, then cut into slices and dry.
For each 100 kg of slice (piece) of Radix Polygoni Multiflori use 10 kg of black bean.
Preparation of black bean juice: Boil 10 kg of black bean in a sufficient quantity of water for about 4 hours and stew to get about 15 kg of juice. Boil the bean residue again in water for about 3 hours and stew to get about 10 kg of juice. Combine to get about 25 kg of the black bean juice.

Description Irregularly shrunken pieces or slices, about 1 cm thick. Externally dark brown or brown, uneven. Texture hard, fracture horny, brown or black. Odour slight; taste, slightly sweet, bitter and astringent.

Identification Complies with test (2) of Identification described under Radix Polygoni Multiflori.

Water Carry out the method for determination of water (Appendix IX H, method 1), not more than 12.0 per cent.

Total ash Not more than 9.0 per cent (Appendix IX K).

Acid-insoluble ash Not more than 2.0 per cent (Appendix IX K).

Extractives Carry out the method for determination of ethanol-soluble extractives (Appendix X A, the hot extraction method), using ethanol as the solvent, not less than 5.0 per cent.

Assay Operate protected from light. Carry out the method for high performance liquid chromatography (Appendix VI D).

Chromatographic system and system suitability Use octadecylsilane bonded silica gel as the stationary phase and a mixture of acetonitrile and water (5:15) as the mobile phase. As detector a spectrophotometer set at 320 nm. The number of theoretical plates of the column is not less than 2000, calculated with the reference to the peak of 2,3,5,4′-tetrahydroxystilbene-2-O-β-D-glucoside.

Reference solution Weigh accurately a quantity of 2,3,5,4′-tetrahydroxy-stilbene-2-O-β-D-glucoside CRS, dissolve in dilute ethanol to produce a solution containing 0.2 mg per ml.

Test solution Weigh accurately 0.2 g of the powder (through No. 4 sieve) to a stopper conical flask, add accurately 25 ml of dilute ethanol and weigh. Heat under reflux for 30 minutes, cool and weigh again, replenish the loss of solvent with dilute ethanol and mix well. Filter the supernatant with millipore film (0.45 μm), use the successive filtrate as the test solution.

Procedure Inject accurately 10 μl of each of the reference solution and the test solution, respectively, into the column, and calculate the content.
It contains not less than 0.70 per cent of 2,3,5,4′-tetrahydroxystilbene-2-O-β-D-glucoside ($C_{20}H_{22}O_9$), calculated with reference to the dried drug.

Action To replenish the liver and the kidney with vital essence and blood, blacken hair, and strengthen the tendons and bones.

Indications Anemia; dizziness and tinnitus; premature greying of hair and beard; soreness and weakness of the loins and the knees; abnormal uterine bleeding and leukorrhalgia; general debility in chronic malaria; hyper-lipemia.

Usage and dosage As described under Radix Polygoni Multiflori.

Storage As described under Radix Polygoni Multiflori.

Radix Pseudostellariae (太子参, Taizishen)

Heterophylly Falsestarwort Root

Heterophylly Falsestarwort Root is the dried root tuber of *Pseudostellaria heterophylla* (Miq.) Pax ex Pax et Hoffm. (Fam. Caryophyllaceae). The drug is collected in autumn when most of the aerial parts wither, washed clean, removed from rootlet, either treated with boiling water for a

moment and then dried in the sun, or dried in the sun directly.

Description Slenderly fusiform or slat-shaped, slightly curved, 3-10 cm long, 2-6 mm in diameter. Externally yellowish-white, relatively smooth but slightly wrinkled longitudinally, with rootlet scars at dents. Apex with stem scars. Texture hard and fragile, fracture even, yellowish-white and horny, or whitish and starchy. Odour, slight; taste, sweetish.

Identification (1) Transverse section: Cork consisting of 2-4 rows of subsquare cells. Phelloderm thin, only consisting of several rows of parenchymatous cells, elongated tangentially. Phloem narrow, with broad rays. Cambium in a ring. The majority of root occupied by xylem, vessels sparse and arranged radially, primary xylem occurring triarch to tetrarch. Parenchymatous cells packed with starch granules and clusters of calcium oxalate.
(2) Macerate warmly 1 g of the powder in 10 ml of methanol, shake for 30 minutes, filter, concentrate the filtrate to 1 ml, used as the test solution. Prepare a solution of 1 g of Radix Pseudostillaria reference drug in the same manner as the reference drug solution. Carry out the method for thin layer chromatography (Appendix Ⅵ B), using silica gel G mixed with sodium carboxymethylcellulose as the coating substance and a mixture of *n*-butanol, glacial acetic acid and water (4 : 1 : 1) as the mobile phase. Apply separately 1 μl of each of the two solutions to the plate. After developing in a chamber pre-equilibrated with mobile phase for 15 minutes and removal of the plate, dry in air, spray with 0.2% ninhydrin ethanol solution, heat at 105℃ to the spots clear. The spots in the chromatogram obtained with the test solution correspond in colour and position to the spots in the chromatogram obtained with the reference drug solution.

Action To replenish *qi* and invigorate the spleen function, and promote production of body and moisten the lung.

Indications Hypofunction of the spleen with lassitude and anorexia; debility and deficiency of *qi* and *yin* marked by spontaneous sweating and thirst during convolescence, dry cough due to dryness of the lung.

Usage and dosage 9-30 g.

Storage Preserve in a ventilated dry place, protected from moisture and moth.

Radix Puerariae Lobatae (葛根, Gegen)

Kudzuvine Root

Kudzuvine Root is the dried root of *Pueraria lobata* (Willd.) Ohwi (Fam. Leguminosae), commonly known as "ye-ge". The drug is collected in autumn and winter, often cut into thick slices or pieces when fresh, and dried.

Description In rectangular thick slices cut longitudinally or small square pieces, 5-35 cm long, 0.5-1 cm thick. The outer bark pale brown, with longitudinal wrinkles, rough, cut surface yellowish-white, showing indistinct striations. Texture pliable and strongly fibrous. Odour, slight; taste, slightly sweetish.

Identification (1) Powder: Pale brown. Starch granules simple granules spheroidal, semi-rounded or polygonal, 3-37 μm in diameter, hilum pointed, cleft or stellate, compound granules of 2-10 components. Fibres mostly in bundles, walls thickened and lignified, surrounded by parenchymatous cells mostly containing prisms of calcium oxalate, forming crystal fibres; crystal cells with lignified and thickened walls. Stone cells infrequently visible, subrounded or polygonal, 38-70 μm in diameter. Bordered pitted vessels relatively large, pits hexagonal or elliptical, arranged very densely.
(2) Macerate 0.8 g of the powder in 10 ml of methanol for 2 hours, filter and evaporate the filtrate to dryness. Dissolve the residue in 0.5 ml of methanol as test solution. Dissolve puerarin CRS in methanol to produce a solution containing 1 mg per ml as the reference solution. Carry out the method for thin layer chromatography (Appendix Ⅵ B), using silica gel H mixed with sodium carboxymethylcellulose as the coating substance and a mixture of chloroform, methanol and water (7 : 2.5 : 0.25) as the mobile phase. Apply in strip separately to the plate 10 μl of each of the two solutions. After developing and removal of the plate, dry in air and examine under ultraviolet light at 365 nm. The fluorescent strip in the chromatogram obtained with the test solution corresponds in position and colour to the fluorescent strip in the chromatogram obtained with the reference solution.

Water Carry out the method for the determination of water (Appendix Ⅸ H, method 1), not more than 14.0 per cent.

Total ash Not more than 7.0 per cent (Appendix Ⅸ K).

Assay Carry out the method for high performance liquid chromatography (Appendix Ⅵ D).

Chromatographic system and system suitability Use octadecylsilane bonded silica gel as the stationary phase and a mixture of methanol and water (25 : 75) as the mobile phase. As detector a spectrophotometer set at 250 nm. The number of theoretical plates of the column is not less than 4000, calculated with the reference to the peak of puerarin.

Reference solution Place 10 mg of puerarin CRS, weighed accurately, to a 25 ml volumetric flask, add 30% ethanol to volume and mix well. Measure accurately 2 ml of the solution to a 10 ml volumetric flask, dilute with 30% ethanol to volume and mix well (80 μg of puerarin per ml).

Test solution Weigh accurately 0.1 g of the powder (through No. 3 sieve) to a conical flask. Add accurately 50 ml of 30% ethanol and weigh. Heat under reflux on a water bath for 30 minutes, cool, and weigh again, replenish the loss of the solvant with 30% ethanol and mix well. Filter and use the successive filtrate as the test solution.

Procedures Accurately inject 10 μl of each of the reference solution and the test solution, respectively, into the column, determine and calculate the content.
It contains not less than 2.4 per cent of puerarin ($C_{21}H_{20}O_9$), calculated with reference to the dried drug.

Processing Eliminate foreign matter, wash clean, soften thoroughly, cut into thick pieces, and dry in the sun.

Action To relieve fever, to promote the production of body fluid, to facilitate eruption, and to arrest diarrhea.

Indications Fever, headache and painful stiffness of the nape in exogenous affections, thirst, diabetes, measles with inadequate eruption, acute dysentery or diarrhea, stiff and painful nape in hypertension.

Usage and dosage 9-15 g.

Storage Preserve in a ventilated dry place, protected from moth.

Radix Puerariae Thomsonii
(粉葛，Fenge)

Thomson Kudzuvine Root

Thomson Kudzuvine Root is the dried root of *pueraria thomsonii* Benth. (Fam. Leguminosae). The drug is collected in autumn and winter, removed from outer bark, partially dried, cut into sections or further halved longitudinally, or obliquely cut into thick slices or pieces, and dried.

Description Cylindrical, subfusiform or semi-cylindrical, 12-15 cm long, 4-8 cm in diameter; some in longitudinally or obliquely cut thick slices, varying in size. Externally yellowish-white or pale brown, or greyish-brown when unpeeled. Heavy, texture hard and starchy, Transversely cut surface showing pale brown concentric rings formed by fibres, longitudinally cut surface showing several longitudinal striations formed by fibres. Odour, slight, taste slightly sweet.

Identification (1) Powder: Yellowish-white. Starch granules abundent, simple granules spheroidal, semi-rounded or polygonal, 3-37 μm in diameter, hilum pointed, cleft or stellate; compound granules of 2-10 components. Fibres mostly in bundles, walls thickened and lignified, surrounded by cells mostly containing prisms of calcium oxalate, forming crystal fibres; crystal cells with lignified and thickened walls. Stone cells infrequently visible, subrounded or polygonal, 38-70 μm in diameter. Bordered pitted vessels relatively large, pits hexagonal or elliptical, arranged very densely.

(2) Macerate 0.8 g of the powder in 10 ml of methanol for 2 hours, filter and evaporate the filtrate to dryness. Dissolve the residue in 0.5 ml of methanol as the test solution. Dissolve puerarin CRS in methanol to produce a solution containing 1 mg per ml as the reference solution. Carry out the method for thin layer chromatography (Appendix Ⅵ B), using silica gel H mixed with sodium carboxymethylcellulose as the coating substance and a mixture of chloroform, methanol and water (7∶2.5∶0.25) as the mobile phase. Apply in strip separately to the plate 10 μl of each of the two solutions. After developing and removal of the plate, dry in air and examine under ultraviolet light at 365 nm. The fluorescent strip in the chromatogram obtained with the test solution corresponds in position and colour to the fluorescent strip in the chromatogram obtained with the reference solution.

Water Carry out the method for the determination of water (Appendix Ⅸ H, method 1), not more than 14.0 per cent.

Total ash Not more than 5.0 per cent (Appendix Ⅸ K).

Assay Carry out the method for high performance liquid chromatography (Appendix Ⅵ D).

Chromatographic system and system suitability Use octadecylsilane bonded silica gel as the stationary phase and a mixture of methanol and water (25∶75) as the mobile phase. As detector a spectrophotometer set at 250 nm. The number of theoretical plates of the column is not less than 4000, calculated with the reference to the peak of puerarin.

Reference solution Weigh accurately 10 mg of puerarin CRS to a 25 ml volumetric flask, dissolve in 30% ethanol and dilute to volume, and mix well. Measure accurately 2 ml of the solution to a 10 ml volumetric flask, dilute with 30% ethanol to volume and mix well (80 μg puerarin per ml).

Test solution Weigh accurately 0.8 g of the powder (through No. 3 sieve) to a conical flask, accurately add 50 ml of 30% ethanol and weigh. Heat under reflux on a water bath for 30 minutes, cool, and weigh again, replenish the loss of the solvent with 30% ethanol and mix well. Filter and use the successive filtrate as the test solution.

procedures Inject accurately 10 μl of each of the reference solution and the test solution respectively, into the column, determine and calculate the content.

It contains not less than 0.30 per cent of puerarin ($C_{21}H_{20}O_9$), calculated with reference to the dried drug.

Processing Eliminate foreign matter, wash clean, soften thoroughy, cut into thick slices, and dry in the sun.

Action To release muscles and subside fever, encourage production of body fluids, induce eruptions, elevate *spleen-yang* to arrest diarrhea.

Indications Fever, headache, stiff neck, thirsty, diabetes, measles with inadequate eruptions, dysentery, diarrhea due to exogenous pathogenic factors; stiff neck from hypertension.

Usage and dosage 9-15 g.

Storage Preserve in a ventilated and dry place, protected from moth.

Radix Pulsatillae
(白头翁，Baitouweng)

Chinese Pulsatilla Root

Chinese Pulsatilla Root is the dried root of *Pulsatilla chinensis* (Bge.) Regel (Fam. Ranunculaceae). The drug is collected in spring or autumn, removed from soil, and dried.

Description Subcylindrical or conical, slightly tortuous, 6-20 cm long, 0.5-2 cm in diameter. Externally yellowish-brown or brown, irregularly and longitudinally wrinkled or furrowed, bark easily exfoliated, the exposed wood yellow, some exhibiting reticulated fissures and cracks, usually with decayed depressed holes near root stock. Root stock slightly swollen, white-tomentose, some showing sheathlike pedicel bases. Texture hard and fragile, fracture yellowish-white or pale yellowish-brown in bark and pale yellow in wood. Odour, slight; taste, slightly bitter and astringent.

Identification (1) Powder: Greyish-brown. Phloem fibres fusiform or spindle-shaped, 100-390 μm long, 16-42 μm in diameter, with lignified walls. Non-glandular hairs unicellular, 13-33 μm in diameter, the base slightly inflated, the walls mostly lignified, some showing spiral or doublespiral striations. Bordered pitted, reticulated and spiral vessels 10-72 μm in diameter.

(2) To 4 g of the powder add 20 ml of ethanol, heat under reflux for 1 hour, filter. Concentrate the filtrate to about 6 ml, cool, add appropriate quantity of acetone, a precipitate is produced. Filter and tranfer about 5 mg of the precipitate to a test tube, add 1 ml of acetic anhydride to dissolve, then add 1 ml of sulfuric acid along the tube wall, a red or red-violet colour is produced at the junction of the two liquids.

Processing Eliminate foreign matter, wash clean, soften thoroughly, cut into thin slices, and dry.

Action To remove *toxic heat* and relieve bloody dysentery.

Indications Amoebic dysentery; pudendal itching with excessive leukorrhea.

Usage and dosage 9-15 g.

Storage Preserve in a ventilated dry place.

Radix Ranunculi Ternati (猫爪草, Maozhaocao)

Catclaw Buttercup Root

Catclaw Buttercup Root is the dried root tuber of *Ranunculus ternatus* Thunb. (Fam. Ranunculaceae). The drug is collected in spring and autumn, removed from rootlet and soil, and dried in the sun.

Description Fusiform, mostly 5-6 fascicled like a cat's claw, 3-10 mm long, 2-3 mm in diameter, apex with yellowish-brown remains of stem and stem scars. Externally yellowish-brown or greyish-yellow, gradually darkening on long storage, with slightly longitudinal wrinkles and some dotted rootlets scars and residual rootlets. Texture compact, fracture whitish or yellowish-white, hollowed or solid, starchy. Odour, slight; taste, slightly sweet.

Identification Transverse section: Epidermal cells tangentially elongated, yellowish-brown, some differentiated into epidermal hairs, slightly lignified. Cortex consisting of 20-30 rows of cells, walls slightly thickened and pitted; endodermis distinct. Stele small, xylem and phloem 2 strands each, arranged alternatively. Parenchymatous cells filled with starch granules.

Action To dissolve lumps and cause subsidence of swelling.

Indications unruptured scrofula; tuberculosis of lymph nodes.

Usage and dosage 15-30 g; up to 120 g when used alone.

Storage Preserve in a ventilated and dry place, protected from moth.

Radix Rehmanniae (地黄, Dihuang)

Rehmannia Root

Rehmannia Root is the fresh or dried root tuber of *Rehmannia glutinosa* Libosch. (Fam. Scrophulariaceae). The drug is collected in autumn, removed from root stock, rootlet and soil, used either in fresh state or baked to almost dry. The former is known as "Xian Dihuang" (Fresh Rehmannia Root) and the latter is known as "Sheng Dihuang" (Unprocessed Rehmannia Root).

Description *Xian Dihuang* Fusiform or slat-shaped, 8-24 cm long, 2-9 cm in diameter. The outer bark thin, externally pale reddish-yellow, with curved longitudinal wrinkles, bud scars, elongated transverse lenticel-like protrudings and irregular scars. Texture fleshy, easily broken, fracture showing a pale yellowish-white bark with orange-red oil dots scattered, and a yellowish-white wood with vessels arranged radially. Odour, slight; taste, slightly sweet and bitterish.

Sheng Dihuang Mostly in irregular masses or oblong, swollen in the centre, slightly tapering at both ends, 6-12 cm long, 3-6 cm in diameter. Some small, slat-shaped, slightly compressed or twisted. Externally brownish-black or brownish-greyish, heavily shrunken, with irregular transverse wavy lines. Texture heavy, soft and tenacious, uneasily broken, fracture brownish-black or jet-black, lustrous, viscous, Odour, slight; taste, slightly sweet.

Identification (1) Transverse section: Cork consisting of several layers of cells. In phelloderm parenchymatous cells loosely arranged; scattered with more secretory cells, containing orange-yellow oil droplets; stone cells occasionally found. Phloem relatively broad, secretory cells less. Cambium in a ring. Xylem rays broad, vessels sparse, arranged radially. Powder: Dark brown. Cork cells brownish. Parenchymatous cells subrounded, containing subrounded nuclei. Secretory cells mostly similar to ordinary parenchymatous cells in shape, containing orange or orange-red oil droplets. Bordered pitted and reticulated vessels up to about 92 μm in diameter.
(2) To 2 g of the powder add 20 ml of methanol, heat under reflux on a water bath for 1 hour, cool, filter, concentrate the filtrate to 5 ml used as the test solution. Dissolve catalpol CRS in methanol to produce a solution containing 0.5 mg per ml as the reference solution. Carry out the method for thin layer chromatography (Appendix Ⅵ B), using silica gel G as the coating substance and a mixture of chloroform, methanol and water (14 : 6 : 1) as the mobile phase. Apply separately to the plate 5 μl of each of the above two solutions. After developing and removal of the plate, dry in air, spray with anisaldehyde TS, heat at 105℃ to the spots distinct. A spot in the chromatogram obtained with the test solution corresponds in colour and position to spot in the chromatogram obtained with the reference solution.

Water Carry out the method for determination of water (Appendix Ⅸ H, method 1), not more than 15.0 per cent in Sheng Dihuang.

Total ash Not more than 6.0 per cent (Appendix Ⅸ K).

Acid-insoluble ash Not more than 2.0 per cent (Appendix Ⅸ K).

Extractives Carry out the method for determination of water extractives (Appendix Ⅹ A, the cold maceration method), not less than 65.0 per cent.

Assay Carry out the method for high performance liquid chromatography (Appendix Ⅵ D).

Chromatographic system and system suitability Use octadecylsilane bonded silica gel as the stationary phase and a mixture of acetonitrile and 0.1% solution of phosphoric acid (1 : 99) as the mobile phase. As detector a spectrophotometer set at 210 nm. The number of theoretical plates of the column is not less than 5000, calculated with the reference to the peak of catalpol.

Reference solution Weigh accurately a quantity of catalpol CRS, dissolve in the mobile phase to produce a solution containing 10 μg per ml.

Test solution Cut a quantity of Sheng Dihuang into small pieces (about 5 mm×5 mm), dry under reduced pressure at 80℃ for 24 hours and grind into coarse powder. Weigh accurately 0.4 g to a stoppered conical flask, add accurately 25 ml of methanol and weigh. Heat under reflux for 1.5 hours, cool and weigh again, replenish the loss of solvent with methanol, mix well and filter. Evaporate accurately 10 ml of the successive filtrate nearly to dryness, dissolve the residue in the mobile phase, transfer to a 10 ml volumetric flask, dilute with the mobile phase to volume and mix well.

Procedure Inject accurately 10 μl of each of the reference solution and the test solution, respectively, into the column, and calculate the content.
It contains not less than 0.20 per cent of catalpol ($C_{15}H_{22}O_{10}$), calculated with reference to the dried drug.

Processing Eliminate foreign matter, wash clean, cover to soften, cut into thick slices, and dry.

Action *Fresh Radix Rehmanniae* To remove *heat* and promote the production of body fluids, reduce *heat* in blood, and arrest bleeding.

Radix Rehmanniae (*unprocessed*) To reduce *heat* in blood, nourish *yin* and promote the production of body fluids.

Indications *Fresh Radix Rehmanniae* Impairment of *yin* in febrile diseases marked by deep red tongue and thirst; skin eruptions and maculation; spitting of blood, epistaxis; sore throat.

Radix Rehmanniae (*unprepared*) Febrile diseases with deep red tougue and thirst; deficiency of *yin* with internal *heat*; consumptive fever; wasting-thirst caused by internal *heat*; spitting of blood, epistaxis; skin eruptions and maculation.

Usage and dosage *Fresh Radix Rehmanniae* 12-30 g.

Radix Rehmanniae (*unprocessed*) 9-15 g.

Storage Fresh Rehmannia Root is embedded in sand and protected from freezing; unprocessed Rehmannia Root is preserved in a ventilated dry place, protected from mould and moth.

Radix Rehmanniae Praeparata (熟地黄, Shudihuang)

Prepared Rehmannia Root

The drug is the processed Radix Rehmanniae.

Procedure (1) Stew the Radix Rehmanniae as described under the method for stewing with wine (Appendix Ⅱ D) until the wine is absorbed entirely, take out, dry in the sun until the mucilage in bark is slightly dried, cut into thick slices or pieces, and dry thoroughtly.
To each 100 kg of Radix Rehmanniae add 30-50 kg of yellow rice wine.
(2) Steam the Radix Rehmanniae as described under the method for steaming (Appendix Ⅱ D) until it becomes blackish and shiny, take out, dry in the sun to be eighty percent dried, cut into thick slices or pieces, and dry thoroughly.

Description Occuring in irregular slices and pieces, broken lumps, varying in size and thickness. Externally jet-black, lustrous, more sticky. Texture soft and flexible, uneasily broken, fracture jet-black, lustrous. Odour, slight; taste, sweet.

Identification To 1 g of the powder add 10 ml of ethanol, macerate for 24 hours, filter, and use the filtrate as the test solution. Dissolve 5-(hydroxy methyl) furfural CRS in ethanol to produce a solution containing 0.5 mg per ml as the reference solution. Carry out the method for thin-layer chromatography (Appendix Ⅵ B), using silica gel GF_{254} as the coating substance and a mixture of petroleum ether (60-90°C) and ethyl acetate (1 : 1) as the mobile phase. Apply separately 10 μl of the test solution and 5 μl of the reference solution to the plate. After developing and removal of the plate, dry in air. Examine under ultraviolet light at 254 nm, the spot in the chromatogram obtained with the test solution corresponds in position and colour to the spot in the chromatogram obtained with the reference solution.

Water Carry out the method for determination of water (Appendix Ⅸ H, method 1), not more than 15.0 per cent in Shu Dihuang.

Total ash Not more than 6.0 per cent (Appendix Ⅸ K).

Acid-insoluble ash Not more than 2.0 per cent (Appendix Ⅸ K).

Extractives Carry out the method for determination of water extractives (Appendix Ⅹ A, the cold maceration method), not less than 65.0 per cent.

Action To nourish *yin* and replenish blood, reinforce essence and marrow.

Indications *Yin-deficiency* of liver and kidney, aching and weakness of the loins and knees, hectic fever and bone-steaming, night sweating, seminal emission, internal heat and thirst. Anemia with sallow complexion, palpitation, menoxenia, abnormal uterine bleeding, dizziness, tinnitus, grey hair and beard when young.

Usage and dosage 9-15 g.

Storage Preserve in a ventilated and dry place.

Radix Rhapontici (漏芦, Loulu)

Uniflower Swisscentaury Root

Uniflower Swisscentaury Root is the dried root of *Rhaponticum uniflorum* (L.) DC. (Fam. Compositae). The drug is collected in spring and autumn, removed from rootlet and soil, and dried in the sun.

Description Conical or flatted lumps, mostly twisted, varying in length, 1-2.5 cm in diameter. Externally greyish-brown or dark brown, rough, with longitudinal furrows and rhombic, reticulate clefts. Outer bark easily exfoliated. Root stock swollen, with the remains of stems and scaly leaf bases, top with greyish-white pubescences. Texture light, fragile, easily broken, fracture irregular, greyish-yellow, cleft, greyish-black or brownish-black in the centre. Odour, characteristic; taste, slightly bitter.

Identification (1) Transverse section: Epidermis mostly falled off. Metaderm of several to 20 or more layers of brown cells with slightly thicked, lignified or suberized walls. Phloem relatively broad, rays wide. Cambium in a ring. Xylem vessels abundant, the large vessel groups alternated with the small vessel groups, rays often with radial cracks, sometimes stellate clefts at centre surrounded by suberized cells. Parenchyma possessing secretory canals containing reddish-brown secretion.
Powder: Brown. Reticulate and bordered pitted vessels abundant, about 133 μm in diameter. Secretory canals sliver-shaped, 24-68 μm in diameter, containing reddish-brown secretion. Non-glandular hairs of root stock lignified, 0.5-4 mm long, 20-30 μm in diameter. Cells of metaderm subsquare or rectangular, walls slightly thicked, reddish-brown, lignified or suberized.
(2) To 1 g of the powder add 20 ml of methanol, ultrasonicate for 20 minutes, filter, evaporate the filtrate to dryness, dissolve the residue in 1 ml of ethyl acetate as the test solution. Prepare a solution of 1 g of Radix Rhapontici reference drug in the same manner as the reference drug solution. Carry out the method for thin layer chromatography (Appendix Ⅵ B), using silica gel G as the coating substance and a mixture of cyclohexane and butanone (4 : 1) as the mobile phase. Apply separately 5 μl of each of the two solutions to the plate. After developing and removal of the plate, dry in air, examine under ultraviolet light at 365 nm. The fluorescent spots in the chromatogram obtained from the test solution correspond in colour and position to the spots in the

chromatogram obtained from the reference drug solution.

Water Carry out the method for the determination of water (Appendix Ⅸ H, Method 1), not more than 15.0 per cent.

Extractives Carry out the hot maceration extraction method as described under the determination of ethanol-soluble extractives (Appendix Ⅹ A), using dilute ethanol as the solvent, not less than 8.0 per cent.

Processing Eliminate foreign matter, wash clean, soften thoroughly, cut into thick slices, and dry in the sun.

Action To remove *toxic-heat* for treating subcutaneous infection, promote lactation, and relieve muscular contracture.

Indications Mastitis with swelling and pain, carbuncles, scrofula and ulcers; galactostasis; arthritis with ankylosis.

Usage and dosage 5-9 g.

Precaution Used with caution in pregnancy.

Storage Preserve in a ventilated and dry place.

Radix Sanguisorbae (地榆, Diyu)

Garden Burnet Root

Garden Burnet Root is the dried root *Sanguisorba officinalis* L. or *Sanguisorba officinalis* L. var. *longifolia* (Bert.) Yu et Li (Fam. Rosaceae). The latter is commonly known as "Miandiyu". The drug is collected in spring during budding or in autumn after withering, removed from rootlet, washed clean, dried; or cut into slices while fresh, and dried.

Description *Root of Sanguisorba officinalis* Irregular fusiform or cylindrical, slightly curved or twisted, 5-25 cm long, 0.5-2 cm in diameter. Externally greyish-brown to brown, rough, with longitudinal wrinkles. Texture hard, fracture relatively even, pink or pale yellow, wood approximately arranged radially. Odour, slights; taste, slightly bitter and astringent.

Root of Sanguisorba officinalis var. *longifolia* Long-cylindrical, slightly curved or twisted, growing on the stout rhizomes. Externally reddish-brown or brownish-purple, with fine longitudinal wrinkles. Texture hard and tenacious, fracture yellowish-brown or reddish-brown, bark with numerous yellowish-white or yellowish-brown woolly fibres. Odourless; taste, slightly bitter and astringent.

Identification (1) Transverse section:

Root of Sanguisorba officinalis Cork of several layers of brown cells. Phelloderm cells oblong. Phloem with cracks. Cambium ring distinct. Xylem vessels arranged radially, fibres non-lignified, primary xylem distinct. Parenchymatous cells containing clusters and fine prisms of calcium oxalate as well as starch granules.

Root of Sanguisorba officinalis var. *longifolia* Numerous fibres, singly or grouped, existed in the inside of cortex and phloem. Phloem rays distinct. Xylem fibres infrequent.

Powder of root of Sanguisorba officinalis Greyish-yellow to brownish-yellow. Clusters of calcium oxalate numerous, with obtuse angles, 18-65 μm in diameter. Starch granules numerous, mostly single granules, 11-25 μm long, 3-9 μm in diameter, subrounded, broad ovate or irregular, hilum mostly slit-shaped, striations indistinct. Cork cells yellowish-brown, rectangular, some lumina containing yellowish-brown masses or oily dripped contents. Vessels mostly reticulated or bordered pitted thickened, 13-60 μm in diameter. Fibers relatively less, singly or grouped, slender, 5-9 μm in diameter, non-lignified, pits indistinct. Prisms of calcium oxalate 5-20 μm in diameter.

Powder of root of Sanguisorba officinalis var. *longifolia* Reddish-brown. Phloem fibers numerous, singly or grouped, walls thickened, 7-26 mm in diameter, relatively long, non-lignified.

(2) To 2 g of the powder, add 50 ml of water and heat to boil for 30 minutes, allow to cool, centrifuge for 10 minutes. Extract the supernatant by shaking with two 15-ml quantities of ether saturated with hydrochloric acid, combine the ether solutions and evaporate to dryness. Dissolve the residue in 1 ml of methanol as the test solution. Dissolve gallic acid CRS in methanol to produce a solution containing 0.5 mg per ml as the reference solution. Carry out the method for thin layer chromatography (Appendix Ⅵ B), using silica gel G containing sodium carboxymethylcellulose as the coating substance and a mixture of toluene (saturated with water), ethyl acetate and formic acid (6 : 3 : 1) as the mobile phase. Apply separately 2-4 μl of the test solution and 2 μl of the reference solution to the plate. After developing and removal of the plate, dry in air, spray with a 1% solution of ferric chloride in ethanol. The spot in the chromatogram obtained with the test solution corresponds in position and colour to the spot in the chromatogram obtained with the reference solution.

Water Carry out the method for the determination of water (Appendix Ⅸ H, Method 1), not more than 14.0 per cent.

Total ash Not more than 10.0 per cent (Appendix Ⅸ K).

Acid-insoluble ash Not more than 2.0 per cent (Appendix Ⅸ K).

Assay Weigh accurately 0.4 g of the powder (through No. 4 sieve), carry out the method for the determination of tanninoids (Appendix Ⅹ B). It contains not less than 10.0 per cent of tanninoids, calculated with reference to the dried drug.

Processing *Radix Sanguisorbae* Eliminate foreigh matter; for the drug not sliced, wash clean, remove remains of stems, soften thoroughly, cut into thick slices, and dry.

Radix Sanguisorbae (carbonized) Stir-bake the slices of Radix Sanguisorbae as described under the method for carbonizing by stir-baking (Appendix Ⅱ D) until the outer part is charred while its inner part becomes brown.

Action To arrest bleeding by dispelling *heat* from blood, and counteract *toxicity* and cure sores.

Indications Hematochezia, hemorrhoidal bleeding, bloody dysentery, abnormal uterine bleeding; scalds and burns; carbuncles, boils and sores.

Usage and dosage 9-15 g; for external use, appropriate quantity is ground into powder and applied topically.

Storage Preserve in a ventilated dry place, protected from moth.

Radix Saposhnikoviae (防风, Fangfeng)

Divaricate Saposhnikovia Root

Divaricate Saposhnikovia Root is the dried root of

Saposhnikovia divaricata (Turcz.) Schischk. (Fam. Umbelliferae). The drug is collected in spring or autumn before growing of the flowering-stem, removed from the rootlet and soil, and dried in the sun.

Description Long conical or long cylindrical, gradually tapering towards the lower part, some slightly tortuous, 15-30 cm long, 0.5-2 cm in diameter. Externally greyish-brown, rugged, with longitudinal wrinkles, numerous transverse-elongated lenticel-like protrudings and dotted raised rootlet scars. Root stock with obvious dense annulations, some annulations marked by brown hair-like remains of leaf bases. Texture light, easily broken, fracture uneven, bark brownish and cracked, wood yellowish. Odour, characteristic; taste, sweetish.

Identification (1) Transverse section: Cork consisting of 5-30 layers of cells. Phelloderm narrow and showing larger elliptical vittae. Phloem broader, scattered with numerous subrounded vittae surrounded by 4-8 secretory cells, gold secretion visible in vittae; rays mostly curved and becoming cleft in the outer part. Cambium distinct. Xylem vessels fairly abundant, arranged radially. Pith present at root stock, stone cells in parenchyma occasionally visible.

Powder: Brownish. Vattae 17-60 μm in diameter, filled with gold secretion. Vascular bundles of leaf bases usually accompanied by fibre bundles. Reticulated vessels 14-85 μm in diameter. Stone cells infrequent, yellowish-green and oblong or subrectangular, with thicker walls.

(2) To 1 g of the powder add 20 ml of acetone, ultrasonicate for 20 minutes, filter, evaporate the filtrate to dryness, dissolve the residue in 1 ml of ethanol as the test solution. Prepare a solution of 1 g of Radix Saposhnikoviae reference drug in the same manner as the reference drug solution. Dissolve a quantity of prim-*O*-glucosylcimifugin CRS and 5-*O*-methylvisamminoside CRS in ethanol to produce a mixture containing 1 mg of each per ml as the reference solution. Carry out the method for thin layer chromatography (Appendix Ⅵ B), using silica gel GF_{254} as the coating substance and a mixture of chloroform and methanol (4 : 1) as the mobile phase. Apply separately to the plate 10 μl of each of the three solutions. After developing and removal of the plate, dry in air, examine under ultraviolet light at 254 nm. The spots in the chromatogram obtained with the test solution correspond in position and colour to the spots in the chromatogram obtained with the reference drug solution and the reference solution.

Water Carry out the method for determination of water (Appendix Ⅸ H, method 1), not more than 10.0 per cent.

Total ash Not more than 6.5 per cent (Appendix Ⅸ K).

Acid-insoluble ash Not more than 1.5 per cent (Appendix Ⅸ K).

Extractives Carry out the hot extraction method for determination of ethanol-soluble extractives (Appendix Ⅹ A), using ethanol as the solvent, not less than 13.0 per cent.

Assay Carry out the method for high performance liquid chromatography (Appendix Ⅵ D).

Chromatographic system and system suitability Use octadecylsilane bonded silica gel as the stationary phase and a mixture of methanol and water (40 : 60) as the mobile phase. As detector a spectrophotometer set at 254 nm. The number of theoretical plates of the column is not less than 12000, calculated with the reference to the peak of prim-*O*-glucosylcimifugin.

Reference solution Weigh accurately a quantity of prim-*O*-glucosylcimifugin CRS and 5-*O*-methylvisamminoside CRS, respectively, add methanol to produce two solutions each containing 60 μg per ml as the reference solutions.

Test solution Weigh accurately 0.25 g of the fine powder to a stopper conical flask, accurately add 10 ml of methanol and weigh, heat under reflux on a water bath for 2 hours, cool and weigh again, replenish the loss of the solvent with methanol, mix well, filter and use the successive filtrate as the test solution.

Procedure Inject accurately 3 μl of each of the reference solutions and 2 μl of the test solution, respectively, into the column, and calculate the content.

It contains not less than 0.24 per cent of the total amount of prim-*O*-glucosylcimifugin ($C_{22}H_{27}O_{11}$) and 5-*O*-methylvisamminoside ($C_{22}H_{28}O_{10}$), calculated with reference to the dried drug.

Processing Eliminate foreign matter, wash clean, soften thoroughly, cut into thick slices, and dry.

Action To induce diaphoresis, to dispel *wind*, to alleviate rheumatic condition, and to relieve spasm.

Indications Headache in colds; urticaria; rheumatic arthralgia; tetanus.

Usage and dosage 4.5-9 g.

Storage Preserve in a cool and dry place, protected from moth.

Radix Scrophulariae (玄参, Xuanshen)

Figwort Root

Figwort Root is the dried root of *Scrophularia ningpoensis* Hemsl. (Fam. Scrophulariaceae). The drug is collected in winter when stem and leaves wither, removed from rhizome, bud, rootlet and soil, dried in the sun or baked to be half-dried, piled up for 3-6 days, processed for several times until dried completely.

Description Subcylindrical, slightly thick at the middle part or thick at the upper part and slender at the lower part, sometimes slightly curved, 6-20 cm long, 1-3 cm in diameter. Externally greyish-yellow or greyish-brown, with irregular longitudinal grooves, transverse lenticel-like protrudings, sparse transverse fissures and numerous rootlet scars. Texture compact, uneasily broken, fracture black, somewhat lustrous. Odour, characteristic resembling caramel; taste, sweetish and slightly bitter.

Identification (1) Transverse section. Cortex relatively broad, stone cells scattered singly or 2-5 in groups, polygonal, subrounded or subsquare, with thicker walls and distinct striations. Phloem rays much cleft. Cambium in a ring. Xylem rays broad, also much cleft; vessels less, subpolygonal, up to 113 μm in diameter, accompanied with wood fibres. Parenchymatous cells containing nucleus-like substance.

(2) To 2 g of the powder add 10 ml of methanol and macerate for 1 hour, ultrasonicate for 15 minutes, filter and use the filtrate as the test solution. Dissolve harpagide CRS and harpagoside CRS in ethanol to produce a mixture each containing 1 mg per ml as the reference solution. Carry out the method for thin layer chromatography (Appendix Ⅵ B), using silica gel G as the coating substance and a mixture of *n*-butanol, acetic acid and water (7 : 1 : 2) as the mobile phase. Apply separately to the plate 3 μl of each of the above two solutions. After developing in a chamber pre-saturated with the mobile phase for 15 minutes, removal of

the plate, dry in air, spray with vanillin in sulfuric acid TS and heat to the spots clear. The spots in the chromatogram obtained with the test solution correspond in position and colour to the spots obtained with the reference solution.

Water Carry out the method for determination of water (Appendix Ⅸ H), not more than 12.0 per cent.

Total ash Not more than 5.0 per cent (Appendix Ⅸ K).

Acid-insoluble ash Not more than 1.8 per cent (Appendix Ⅸ K).

Extractives Carry out the method for determination of water-soluble extractives (Appendix Ⅹ A, the hot extraction method), not less than 60.0 per cent.

Assay Carry out the method for high performance liquid chromatography (Appendix Ⅵ D).

Chromatographic system and system suitability Use octadecylsilane bonded silica gel as the stationary phase, acetonitrile as the mobile phase A and 1% solution of acetic acid as the mobile phase B, elute in gradient as the following:

Time (min)	Mobile phase A (per cent V/V)	Mobile phase B (per cent V/V)
0-20	20→50	80→50

As detector a spectrophotometer set at 278 nm. The number of theoretical plates of the column is not less than 5000, calculated with the reference to the peak of harpagoside.

Reference solution Weigh accurately a quantity of harpagoside CRS, previously dried for 24 hour under reduced pressure, dissolve with 30% methanol to produce a solution containing 10 μg per ml.

Test solution Weigh accurately 0.5 g of the powder to a stopper conical flask, accurately add 50 ml of 30% methanol, and weigh. After macerating for 1 hour, ultrasonicate (power 500 W, frequency 40 kHz) for 30 minutes, cool and weigh again, replenish the loss of solvent with 30% methanol and mix well. Filter and use the successive filtrate as the test solution.

Procedure Inject accurately 20 μl of each of the reference solution and the test solution, respectively, into the column, and calculate the content.
It contains not less than 0.050 per cent of harpagoside ($C_{24}H_{30}O_{11}$), calculated with reference to the dried drug.

Processing Eliminate remains of rhizomes and foreign matter, wash clean, soften thoroughly, cut into thin slices and dry; or soak briefly in water, steam thoroughly, air-dry briefly, then cut into thin slices, and dry completely.

Action To reduce *heat* from blood, nourish *yin*, quench *fire*, and counteract *toxicity*.

Indications Febrile diseases with impairment of *yin* manifested by deep red tongue and dire thirst, or with eruptions; constipation due to impairment of body fluids; phthisis with cough; conjunctivitis, sore throat, scrofula, diphtheria, boils and sores.

Usage and dosage 9-15 g.

Precaution Incompatible with Rhizoma et Radix Veratri.

Storage Preserve in a dry place, protected from mould and moth.

Radix Scutellariae (黄芩, Huangqin)

Baical Skullcap Root

Baical Skullcap Root is the dried root of *Scutellaria baicalensis* Georgi (Fam. Labiatae). The drug is collected in spring or autumn, removed from rootlet and soil, dashed to peel the rugged outer bark after being sun-dried, and then dried thoroughly.

Description Conical, twisted, 8-25 cm long, 1-3 cm in diameter. Externally brownish-yellow or dark yellow, bearing sparse warty traces of rootlets, the upper part rough, with twisted longitudinal wrinkles or irregular reticula, the lower part with longitudinal striations and fine wrinkles. Texture hard and fragile, easily broken, fracture yellow, reddish-brown in the centre; the central part of an old root dark brown or brownish-black, withered or hollowed. Odour, slight; taste, bitter.
Cultivar roots slender, mostly branched. Externally yellowish-brown, outer bark closely adhering to wood, with relatively thin longitudinal wrinkles. Fracture yellow or yellowish, slightly horny. Taste bitterish.

Identification (1) Powder: Yellow. Phloem fibres scattered singly or in bundles, fusiform, 60-250 μm long, 9-33 μm in diameter, thick-walled, with fine pit-canals. Stone cells subrounded, subsquare or rectangular, relatively thick-walled or heavily thick-walled. Cork cells brownish-yellow, polygonal. Reticulated vessels numerous, 24-72 μm in diameter. Wood fibres frequently broken, about 12 μm in diameter, sparsely with oblique pits. Starch granules abundant, simple granules spheroidal, 2-10 μm in diameter, hilum distinct, compound granules composed of 2-3 components.
(2) To 1 g of the powder, add 30 ml of a mixture of ethyl acetate and methanol (3 : 1), heat under reflux for 30 minutes, cool and filter. Evaporate the filtrate to dryness, dissolve the residue in 5 ml of methanol and use the supernatant as the test solution. Prepare a solution of 1 g of Radix Scutellariae reference drug in the same manner as the reference drug solution. Dissolve baicalin CRS, baicalein CRS and wogonin CRS separately in methanol to produce three solutions containing 1 mg, 0.5 mg and 0.5 mg per ml respectively, as the reference solutions. Carry out the method for thin layer chromatography (Appendix Ⅵ B), using polyamide as the coating substance and a mixture of toluene, ethyl acetate, methanol, and formic acid (10 : 3 : 1 : 2) as the mobile phase. Apply separately to the plate 2 μl of each of the test solution and the reference drug solution and 1 μl of the reference solution. After developing in a chamber previously saturated with the mobile phase for 30 minutes, removal of the plate, dry in air. Examine under ultraviolet light at 365 nm. The spots in the chromatogram obtained with the test solution correspond in position and colour to the spots obtained with the reference drug solution. The three dark spots in the chromatogram obtained with the test solution correspond in position and colour to the spots obtained with the reference solutions.

Water Carry out the method for determination of water (Appendix Ⅸ H, method 1), not more than 12.0 per cent.

Total ash Not more than 6.0 per cent (Appendix Ⅸ K).

Extractives Carry out the method for determination of ethanol-soluble extractives (Appendix Ⅹ A, the hot extraction method), using dilute ethanol as the solvent, not less than 40.0 per cent.

Assay Carry out the method for high performance liquid

chromatography (Appendix VI D).

Chromatographic system and system suitability Use octadecylsilane bonded silica gel as the stationary phase and a mixture of methanol, water and phosphoric acid (47 : 53 : 0.2) as the mobile phase. As detector a spectrophotometer set at 280 nm. The number of theoretical plates of the column is not less than 2500, calculated with the reference to the peak of baicalin.

Reference solution Weigh accurately a quantity of baicalin CRS, dried in vaccum at 60℃ for 4 hours, dissolve in methanol to produce a solution containing 60 μg per ml as the reference solution.

Test solution Weigh accurately 0.3 g of medium powder, add 40 ml of 70% ethanol, heat under reflux on a water bath for 3 hours, cool, and filter. Transfer the filtrate to a 100 ml volumetric flask, wash both the container and the residue for several times with a small volume of 70% ethanol, and filter the washings into the same flask. Dilute with 70% ethanol to volume, and mix well. Accurately measure 1 ml to a 10 ml volumetric flask, dilute with methanol to volume, and mix well.

Procedures Accurately inject 10 μl of each of the reference solution and the test solution, respectively, into the column, determine and calculate the content.

It contains not less than 9.0 per cent of baicalin ($C_{21}H_{18}O_{11}$), calculated with reference to the dried drug.

Processing *Radix Scutellariae* Eliminate foreign matter, boil for 10 minutes, take out, soften thoroughly, or steam for half an hour, take out, then cut into thin slices and dry, protecting from exposure to strong sunlight.

Occurring in subrounded or irregular thin slices; externally yellowish-brown to brown; cut surface yellowish-brown or yellowish-green, striated radially.

Carry out the methods as described under Identification test (1) and (2), show the same results. Carry out the method as described under Assay mentioned above, it contains not less than 8.0 per cent of baicalin ($C_{21}H_{18}O_{11}$), calculated with reference to the dried drug.

Radix Scutellariae (processed with wine) Stir-bake the slices of Radix Scutellariae as described under the method for stir-baking with wine (Appendix II D) to dryness.

Occurring in subrounded or irregular thin slices; externally brown; cut surface yellowish-brown, striated radially, showing less burnt patches, sometimes appearing brown in the centre.

Carry out the method according to Assay mentioned above, not less than 8.0 per cent of baicalin ($C_{21}H_{18}O_{11}$), calculated with reference to the dried drug.

Action To remove *damp-heat*, quench *fire* and counteract *toxicity*, arrest bleeding, and prevent abortion.

Indications Oppressed feeling in the chest, nausea and vomiting in epidemic febrile diseases caused by *damp-heat* or *summer-heat*; feeling of stuffiness in the abdomen, acute dysentery or jaundice caused by *damp-heat*; cough due to *heat* in the lung; high fever with dire thirst; spitting of blood and epistaxis due to *heat* in blood; carbuncles and sores; threatened abortion.

Usage and dosage 3-9 g.

Storage Preserve in a ventilated dry place, protected from moisture.

Radix Semiaquilegiae (天葵子, Tiankuizi)

Muskroot-like Semiaquilegia Root

Muskroot-like Semiaquilegia Root is the dried root tuber of *Semiaquilegia adoxoides* (DC.) Makino (Fam. Ranunculaceae). The drug is collected in early summer, washed clean, dried and removed from rootlet.

Description Irregularly short-cylindrical, fusiform, or lump-shaped, somewhat curved, 1-3 cm long, 0.5-1 cm in diameter. Externally dark brown to greyish-black, with irregular longitudinal wrinkles, rootlets or rootlet scars. Apex usually with remains of stems or leaves, covered with several layers of yellowish-brown sheath-like scales. Texture relatively soft, easily broken, fracture whitish in bark and yellowish-white or yellowish-brown and slightly radial-striated in wood. Odour, slight; taste sweet, slightly bitter and pungent.

Identification (1) Transverse section: Cork consisting of more rows of cells containing brown contents. Phelloderm relatively narrow. Phloem broad, cambium in a ring. Xylem rays up to 20 or more rows of cells wide, vessels arranged radially. Sometimes a small pith visible.

(2) Observe the fracture under ultraviolet light at 365 nm, a yellowish-white fluorescence is shown, which becomes weak on adding acid or alkali.

(3) To 1 g of the powder add 10 ml of 70% ethanol, heat under reflux for 30 minutes, filter. Evaporate the filtrate to dryness, dissolve the residue in 5 ml of hydrochloric acid solution (1→100), filter and transfer the filtrate separately to two test tubes. In one tube add 1-2 drops of potassium iodobismuthate TS, an orange-red precipitate is produced; in another tube add 1-2 drops of silicotungstic acid TS, a yellow precipitate is produced.

Action To remove *toxic-heat* and promote the subsidence of swelling and masses.

Indications Carbuncles, boils and sores; mastitis, scrofula, venomous snake bite.

Usage and dosage 9-15 g.

Storage Preserve in a ventilated dry place, protected from moth.

Radix Sophorae Flavescentis (苦参, Kushen)

Lightyellow Sophora Root

Lightyellow Sophora Root is the dried root of *Sophora flavescens* Ait. (Fam. Leguminosae). The drug is collected in spring or autumn, removed from root stock and rootlet, washed clean and dried; or sliced while fresh, and dried.

Description Long cylindrical, usually branched in lower part, 10-30 cm long, 1-6.5 cm in diameter. Externally greyish-brown or brownish-yellow, exhibiting longitudinal wrinkles and transverse elongated lenticel-like protrudings. Outer bark thin, mostly broken and recurved, easily exfoliated, the exposed surface appearing yellow and smooth. Texture hard, uneasily broken, fracture fibrous. Slices 3-6 mm

thick; transversely cut surface yellowish-white with radial lines and cracks, some exhibiting abnormal vascular bundles arranged in concentric rings or scattered irregularly. Odour slight; taste bitter.

Identification (1) To a transverse section of the drug add several drops of sodium hydroxide TS, an orange red colour is produced in the cork and gradually becomes blood-red, lasting for a long time; no colour reaction is produced in the xylem.

(2) To 0.5 g of the powder, add 0.3 ml of strong ammonia TS and 25 ml of chloroform, allow to stand overnight and filter. Evaporate the filtrate to dryness, dissolve the residue in 0.5 ml of chloroform as the test solution. Dissolve matrine CRS and sophoridine CRS in ethanol to produce a mixture containing 0.2 mg of each per ml as the reference solution. Carry out the method for thin layer chromatography (Appendix Ⅵ B), using silica gel G mixed with 2% solution of sodium hydroxide as the coating substance and a mixture of toluene, acetone and methanol (8 : 3 : 0.5) as the mobile phase. Apply separately to the plate 4 μl of each of the above two solutions. After developing to 8 cm and removal of the plate, dry in air, develop again using the upper layer of a mixture of toluene, ethyl acetate, methanol and water (2 : 4 : 2 : 1, keeping below 10℃) as the mobile phase. After developing and removal of the plate, dry in air. Spray with potassium iodobismuthate TS and ethanolic sodium nitrite TS successively. Two orange spots in the chromatogram obtained with the test solution correspond in position and colour to the spots obtained with the reference solution.

(3) Dissolve oxymatrine CRS in ethanol to produce a solution containing 0.2 mg per ml as the reference solution. Carry out the method for thin layer chromatography (Appendix Ⅵ B), using silica gel G mixed with 2% solution of sodium hydroxide as the coating substance and the lower layer of a mixture of chloroform, methanol and strong ammonia TS (5 : 0.6 : 0.3, keeping below 10℃) as the mobile phase. Apply separately to the plate 4 μl of each of the test solution obtained under the test (2) of Identification and the above reference solution. After developing and removal of the plate, dry in air, spray with potassium iodobismuthate TS and ethanolic sodium nitrite TS successively. An orange spot in the chromatogram obtained with the test solution corresponds in position and colour to the spot obtained with the reference solution.

Water Carry out the method for determination of water (Appendix Ⅸ H, method 1), not more than 11.0 per cent.

Total ash Not more than 8.0 per cent (Appendix Ⅸ K).

Acid-insoluble ash Not more than 1.5 per cent (Appendix Ⅸ K).

Extractives Carry out the method for determination of water-soluble extractives (Appendix Ⅹ A, the cold maceration method), not less than 20.0 per cent.

Assay Carry out the method for high performance liquid chromatography (Appendix Ⅵ D).

Chromatographic system and system suitability Use amino bonded silica gel as the stationary phase and a mixture of acetonitrile, dehydrated ethanol and 3% solution of phosphate acid (80 : 10 : 10) as the mobile phase. As detector a spectrophotometer set at 220 nm. The number of theoretical plates of the column is not less than 2000, calculated with the reference to the peak of oxymatrine.

Reference solution Weigh accurately a quantity of matrine CRS and oxymatrine CRS, respectively, in a mixture of acetonitrile and dehydrated ethanol (80 : 20) to produce two solutions each containing 0.05 mg and 0.15 mg per ml.

Test solution Weigh accurately 0.3 g of the powder (through No. 3 sieve) to a stopper conical flask and add accurately 0.5 ml of strong ammonia TS and 20 ml of chloroform, tightly stopper and weigh. Ultrasonicate (power 250 W, frequency 33 kHz) for 30 minutes, cool and weigh again, replenish the loss of solvent with chloroform and mix well, filter. Measure accurately 5 ml of the successive filtrate and apply to a small column (1 cm in inner diameter) packed with neutral alumina (100-200 mesh, 5 g) and elute with 20-ml quantities of chloroform, a mixture of chloroform and methanol (7 : 3) successively, collect the eluates and evaporate to dryness. Dissolve the residue with small quantity of ethanol and transfer to a 10 ml volumetric flask and dilute with ethanol to volume, and mix well.

Procedure Inject accurately 5 μl of the reference solution and 5-10 μl of the test solution, respectively, into the column, and calculate the content.

It contains not less than 1.2 per cent of the total amount of matrine ($C_{15}H_{24}N_{20}$) and oxymatrine ($C_{15}H_{24}N_2O_2$), calculated with reference to the dried drug.

Processing Remove the remains of root stocks, grade according to size, wash clean, soak briefly, soften thoroughly, cut into thick slices, and dry.

Action To remove *heat* and *damp*, kill parasites, and cause urination.

Indications Acute dysentery with bloody stools; jaundice with oliguria; bloody and purulent leukorrhea; pudendal swelling and itching; eczema, sores with exudation, itching of the skin, scabies, and leprosy. External use for trichomonas vaginitis.

Usage and dosage 4.5-9 g; for external use, appropriate quantity to be decocted for washing.

Precaution Incompatible with Rhizoma et Radix Veratri.

Storage Preserve in a dry place.

Radix Stellariae (银柴胡, Yinchaihu)

Starwort Root

Starwort Root is the dried root of *Stellaria dichotoma* L. var. *lanceolata* Bge. (Fam. Caryophyllaceae). The drug is collected in spring and summer when the plant sprouts, or after autumn when stem and leaves wither; cultivar is collected in the middle of September of the third year, or in the middle of April of the fourth year, removed from remains of stem, rootlet and soil, and dried.

Description Cylindrical, occasionally branched, 15-40 cm long, 0.5-2.5 cm in diameter. Externally pale yellow or yellowish-white, with twisted, longitudinal wrinkles and scars of lateral roots, mostly with numerous pored or disc-like depressions, known as "Shayan" (sand hole), fine powder spread out from brown splits when broken at the part of "shayan". The root stock slightly inflated, with closely aggregated warty bud, stem or rhizome traces, known as "Zhenzhupan" (pearl disk). Texture hard and fragile, easily broken, fracture uneven and looser, splitted, bark fairly thin, wood with radiate striations alternating between yellow and white in colour. Odour, slight; taste, sweet.

Cultivars branched, mostly twisted in the lower part, 0.6-1.2 cm in diameter. Externally pale yellowish-brown, with fine and distinct longitudinal wrinkles, scars of rootlets

mostly appearing pitted-dented, almost without "Shayan" (sand holes). The root stock with numerous warty protrudings. Texture of fracture dense, almost not splitted, slightly starchy, wood with indistinct radiate striations. Taste sweetish.

Identification (1) Transverse section: Cork consisting of several to more than 10 layers of cells. Phelloderm narrow. Sieve tube groups of phloem distinct. Cambium in a ring. Xylem well developed, rays broad, more than 10 cells wide. Parenchymatous cells containing sand crystals of calcium oxalate, mainly in ray cells.
(2) Macerate 1 g of the powder in 10 ml of absolute ethanol for 15 minutes and filter. Examine 2 ml of the filtrate under ultraviolet light at 365 nm, a brilliant blue with slight purple fluorescence is shown.
(3) To 0.1 g of the powder, add 25 ml of methanol, ultrasonicate for 10 minutes and filter. Transfer the filtrate to a 50 ml volumetric flask, dilute with methanol to volume. Carry out the method for ultraviolet spectrophotometry and colourimetry (Appendix Ⅴ A). The solution exhibit a maximum absorption at 270 nm.

Acid-insoluble ash Not more than 5.0 per cent (Appendix Ⅸ K).

Extractives Carry out the method for determination of ethanol-soluble extractives (Appendix Ⅹ A, the cold extraction method), using methanol as solvent, not less than 20.0 per cent.

Processing Eliminate foreign matter, wash clean, soften thoroughly, cut into thick pieces, and dry.

Action To relieve fever in *deficiency* conditions.

Indications Fever due to *deficiency* of *yin*, consumptive fever, fever in infantile malnutrition.

Usage and dosage 3-9 g.

Storage Preserve in a ventilated dry place, protected from moth.

Radix Stemonae (百部, Baibu)

Stemona Root

Stemona Root is the dried root tuber of *Stemona sessilifolia* (Miq.) Miq., *Stemona japonica* (Bl.) Miq. or *Stemona tuberosa* Lour. (Fam. Stemonaceae). The drug is collected in summer or autumn, removed from rootlet, washed clean, treated with boiling water for a moment or steamed until the centre of the cut surface is devoid of a white core, and dried in the sun.

Description *Root of Stemona sessilifolia* Fusiform, the upper end relatively slender, shrunken and curved, 5-12 cm long, 0.5-1 cm in diameter. Externally yellowish-white or pale brownish-yellow, with irregular longitudinal deep furrows, and occasionally transverse wrinkles. Texture fragile, easily broken, fracture even, horny, pale yellowish-brown or yellowish-white, bark broad, stele compressed. Odour, slight; taste, sweet and bitter.

Root of Stemona japonica Two ends slightly thinned. Externally mostly with irregular longitudianl folds and transverse wrinkles.

Root of Stemona tuberosa Long fusiform or long slat-shaped, 8-24 cm long, 0.8-2 cm in diameter. Externally yellowish-brown to greyish-brown, with shallow longitudinal wrinkles or irregular longitudinal furrows. Texture compact, fracture yellowish-white or dark brown, stele large, pith whitish.

Identification (1) Transverse section:

Root of Stemona sessilifolia Velamen of 3-4 layers of cells, walls suberized and lignified with dense and fine striations. Cortex relatively broad. In stele phloem bundles and xylem bundles 19-27, respectively, arranged alternatively, with a few non-lignified fibres in the inner side of phloem bundles; xylem bundles with 2-5 vessels, xylem fibres and tracheids, vessels subpolygonal, 48 μm in diameter, radially, occasionally penetrating into the pith. A few small fibres scattered in pith.

Root of Stemona japonica Velamen of 3-6 layers of cells. Phloem fibres lignified. Vessels up to 184 μm in diameter, radially, usually penetrating into pith, arranged in 2-3 whorls.

Root of Stemona tuberosa Velamen of 3 layers of cells, walls without fine striations, the inner walls of the inner layers heavily thickened. Fibres scattered in the outer part of cortex, subsquare, with slightly lignified walls. In stele phloem bundles 36-40. Vessels in xylem bundles rounded-polygonal, up to 107 μm in diameter. The inner sides of xylem bundles linked up with xylem fibres and slightly lignified parenchymatous cells into a ring.
(2) Heat under reflux 5 g of the powder with 50 ml of 70% ethanol for 1 hour, filter, evaporate the filtrate to remove ethanol. To the residue add strong ammonia TS, adjust to pH 10-11, extract by shaking with 5 ml of chloroform. Evaporate the chloroform solution to dryness, dissolve the residue in 5 ml of 1% hydrochloric acid solution and filter. Devide the filtrate into two portions. To one protion add 1 drop of potassium iodobismuthate TS, an orange-red precipitate is produced; to another portion add 1 drop of silicotungstic acid TS, a milky-white precipitate is produced.

Extractives Carry out the hot extraction method described under the determination of water-soluble extractives (Appendix Ⅹ A), not less than 50.0 per cent.

Processing *Radix Stemonae* Eliminate foreign matter, wash clean, soften thoroughly, cut into thick slices, and dry.
Occurring in irregular thick slices or irregular slat-shaped oblique slices; externally greyish-white or brownish-yellow, deep wrinkled longitudinally; cut surface greyish-white, pale yellowish-brown or yellowish-white, horny; bark relatively thick, stele compressed. Texture flexible and soft. Odour slight; taste sweet and bitter.

Radix Stemonae (*Stir-baked with honey*) Stir-bake the slices of Radix Stemonae as described under the method for stir-baking with honey (Appendix Ⅱ D) until it is not sticky to fingers, using 12.5 kg of refined honey for 100 kg of Radix Stemonae.
The form is similar to the slice of Radix Stemonae, but externally brownish-yellow or brown, with less burnt specks, slightly sticky. Taste sweet.

Action To moisten the lung and relieve cough, and kill insects and worms.

Radix Stemonae (*Stir-baked with honey*) To moisten the lung and relieve cough.

Indications Acute and chronic cough, cough in phthisis, whooping cough; for external use: pediculosis capitis, oxyruiasis, pudendal itching.

Radix Stemonae (*Stir-baked with honey*) Cough in phthisis.

Usage and dosage 3-9 g; for external use, appropriate quantity to be decocted with water or infused in liquor.

Storage Preserve in a ventilated dry place, protected from moisture.

Radix Stephaniae Tetrandrae (防己, Fangji)

Fourstamen Stephania Root

Fourstamen Stephania Root is the dried root of *Stephania tetrandra* S. Moore (Fam. Menispermaceae). The drug is collected in autumn, washed clean, removed from the outer coarse bark, half-dried in the sun, cut into section; the large one is cut longitudinally; and dried.

Description Irregularly cylindrical, semi-cylindrical or lump-shaped, mostly tortuous, 5-10 cm long, 1-5 cm in diameter. Externally greyish-yellow, usually exhibiting deeply depressed transverse grooves and appearing knotty-knobby at the curved part. Texture heavy and compact, fracture even, greyish-white, starchy, with sparsely arranged radial striations. Odour, slight; taste, bitter.

Identification (1)Transverse section: Remaining cork sometimes visible. Phelloderm scattered with stone cell groups, usually arranged tangentially. Phloem relatively broad. Cambium in a ring. The greater part occupied by xylem, rays wide; vessels rare, radially arranged, accompanied by wood fibres. Parenchymatous cells filled with starch granules and a few minute rod-shaped crystals of calcium oxalate.

(2) Heat under reflux 1 g of the powder with 15 ml of ethanol for 1 hour, cool, filter and evaporate the filtrate to dryness. Dissolve the residue in 5 ml of ethanol as the test solution. Dissolve tetrandrine CRS and fangchinoline CRS in chloroform to produce a mixture containing 1 mg of each per ml as the reference solution. Carry out the method for thin layer chromatography (Appendix Ⅵ B), using silica gel G as the coating substance and a mixture of chlorofrom, acetone and methanol (6 : 1 : 1) as the mobile phase. Apply separately to the plate 5 μl of each of the two solutions. After developing and removal of the plate, dry in air, and spray with dilute potassium iodobismuthate TS. The spots in the chromatogram obtained with the test solution correspond in position and colour with the spots in the chromatogram obtianed with the reference solution.

Water Carry out the method for determination of water (Appendix Ⅸ H, method 1), not more than 12.0 per cent.

Total ash Not more than 4.0 per cent (Appendix Ⅸ K).

Extractives Carry out the method for determination of ethanol-soluble extractives (Appendix Ⅹ A, the hot extraction method), using methanol as the solvent, not less than 5.0 per cent.

Assay Carry out the method for high performance liquid chromatography (Appendix Ⅵ D).

Chromatographic system and system suitability Use octadecylsilane bonded silica gel as the stationary phase and a mixture of acetonitrile, methanol, water and glacial acetic acid (40 : 30 : 30 : 1), containing 0.41 g of sodium dodecylsulphonate per 100 ml) as the mobile phase. As detector a spectrophotometer set at 280 nm. The number of theoretical plates of the column is not less than 4000, calculated with the reference to the peak of tetrandrine.

Reference solution Weigh accurately a quantity of tetrandrine and fanchinoline CRS, dissolve in methanol to produce a mixture containing 0.1 mg and 0.05 mg of each per ml.

Test solution Weigh accurately 0.5 g of the powder (through No. 3 sieve), add accurately 25 ml of 2% solution of hydrochloric acid in methanol, and weigh. Heat under reflux for 30 minutes, cool and weigh again, replenish the loss of solvent with 2% solution of hydrochloric acid in methanol and filter. Measure accurately 5 ml of the successive filtrate in a 10 ml volumetric flask, dilute with the mobile phase to volume and mix well.

Procedure Inject accurately 10 μl of each of the reference solution and the test solution, respectively, into the column, and calculate the content.

It contains not less than 1.6 per cent of the total amount of tetrandrine ($C_{38}H_{42}N_2O_6$) and fanchinoline ($C_{37}H_{40}N_2O_6$), calculated with reference to the dried drug.

Processing Eliminate foreign matter, soak briefly, wash clean, soften thoroughly, cut into thick slices, and dry.

Occurring in subrounded or broken thick slices, edges rather dark in colour, cut surface greyish-white, starchy, with sparse radial striations. Odour slight; taste bitter. Carry out the methods as described under Identification test (2), showing the same result. Carry out the method as described under Assay, not less than 1.4 per cent of the total amount of tetrandrine ($C_{38}H_{42}N_2O_6$) and fanchinoline ($C_{37}H_{40}N_2O_6$).

Action To induce urination to alleviate edema and relieve rheumatic conditions.

Indications Edema with oilguria; eczema; rheumatic arthritis; hypertension.

Usage and dosage 4.5-9 g.

Storage Preserve in a dry place, protected from mould and moth.

Radix Tinosporae (金果榄, Jinguolan)

Tinospora Root

Tinospora Root is the dried root tuber of *Tinospora sagittata* (Oliv.) Gagnep. or *Tinospora capillipes* Gagnep. (Fam. Menispermaceae). The drug is collected in autumn and winter, removed from rootlet, washed clean, and dried in the sun.

Description In irregular masses, 5-10 cm long, 3-6 cm in diameter. Externally brownish-yellow or brownish, rugged, deeply wrinkled. Texture hard, uneasily broken, transversely cut surface yellowish-white when dissected, showing vessels in groups and arranged somewhat radially, deeper in colour. Odour, slight; taste bitter.

Identification Dissolve palmatine hydrochloride CRS and jatrorrhizine hydrochloride CRS respectively in methanol to produce two solutions each containing 0.5 mg per ml as the reference solutions. Carry out the method for thin layer chromatography (Appendix Ⅵ B), using silica gel G as the coating substance and a mixture of benzene, ethyl acetate, methanol, isopropanol and strong ammonia TS (12 : 6 : 3 : 3 : 1) as the mobile phase. Apply separately to the plate 4 μl of each of the two reference solutions and the test solution obtained under Assay, after developing in a chamber pre-equilibrated with ammonia vapor and removal of the plate, dry in air. Examine under ultraviolet light at 365 nm. The fluorescent spots in the chromatogram obtained with the test solution correspond in colour and position to the spots in the chromatogram obtained with the reference solutions.

Assay To 1 g of the powder, weighed accurately, add 40

ml of methanol, heat under reflux for 1 hour and filter. Wash the residue with 10 ml of methanol, combine the methanol solutions, evaporate to dryness. Dissolve the residue in a quantity of methanol, transfer to a 5 ml volumetric flask, dilute with methanol to volume, and mix well, used as the test solution. Weigh accurately a quantity of palmatine hydrochloride CRS, add methanol to produce a solution containing 0.2 mg per ml as the reference solution. Carry out the method for thin layer chromatography (Appendix Ⅵ B), using silica gel G as the coating substance and a mixture of benzene, ethyl acetate, methanol, isopropanal and strong ammonia TS (12 : 6 : 3 : 3 : 1) as the mobile phase. Apply separately to the plate 6 μl of the test solution, 2 μl and 4 μl of the reference solution alternatively. After developing in a chamber pre-equilibrated with both ammonia vapor and the mobile phase for 30 minutes, remove the plate, dry in air. Carry out the scanning method for thin layer chromatography (thin layer chromatographic scanning method, Appendix Ⅵ B), the excitation wavelength: λ=366 nm. Measure the integration values of absorbance from the test solution and the reference solution, respectively, calculate the content.

It contains not less than 0.030 per cent of palmatine hydrochloride ($C_{21}H_{22}NO_4 \cdot HCl$), calculated with reference to the dried drug.

Processing Eliminate foreign matter, soak, soften thoroughly, cut into thick slices, and dry.

Action To remove *toxic heat*, cure sore throat to relieve pain.

Indications Swelling and pain of the throat, carbuncles and boils; diarrhea, dysentery; epigastric hot pain.

Usage and dosage 3-9 g; for external use, appropriate quantity to be ground into powder and insufflated into the throat, or to be ground together with vinegar and applied topically.

Storage Preserve in a dry place, protected from moth.

Radix Trichosanthis
(天花粉, Tianhuafen)

Snakegourd Root

Snakegourd Root is the dried root of *Trichosanthes kirilowii* Maxim. or *Trichosanthes rosthornii* Harms (Fam. Cucurbitaceae). The drug is collected in autumn and winter, washed clean, peeled, cut into segment or sliced longitudinally, and dried.

Description Irregular cylindrical, spindle-shaped, or in pieces, 8-16 cm long, 1.5-5.5 cm in diameter. Externally yellowish-white or pale brownish-yellow, with longitudinal wrinkles, rootlet scars and slightly concave transverse lenticel-like streak. Some remained with yellowish-brown outer bark. Texture compact, fracture white or yellowish, starchy, wood yellow, somewhat radially arranged in transversely cut section and striated in longitudinally cut section. Odour, slight; taste, slightly bitter.

Identification (1) Powder: Whitish. Starch granules numerous, simple granules subspheroid, semicircular or helmeted, 6-48 μm in diameter, hilum pointed, shortly cleft or V-shaped, striations faintly visible; compound granules consisting of 2 to 14 components, frequently composed of one big component and several small ones. Bordered-pitted vessels large, mostly broken, some bordered pits hexagonal or square, closely arranged. Stone cells yellowish-green, rectangular, elliptical, subsquare, polygonal or fusiform, 27-72 μm in diameter, relatively thick walled and densely fine pitted.

(2) To 2 g of the powder add 20 ml of dilute ethanol, ultrasonicate for 30 minutes, filter, use filtrate as the test solution. Dissolve L-citrulline CRS in dilute ethanol to produce a solution containing 1 mg per ml as the reference solution. Carry out the method for thin layer chromatography (Appendix Ⅵ B), using silica gel G as the coating substance and a mixture of *n*-butanol, dehydrated ethanol, glacial acetic acid and water (8 : 2 : 2 : 3) as the mobile phase. Apply separately 6 μl of test solution, 1 μl of the reference solution to the plate. After developing and removal of the plate, dry in air, spray with ninhydrin TS, dry at 105℃ until the coloured spots clearly. A spot in the chromatogram obtained with the test solution corresponds in colour and position to the spot in the chromatogram obtained with the reference solution.

Processing Soak briefly, soften thoroughly, cut into thick slices, and dry.

Action To remove *heat*, promote the production of body fluids, and facilitate the drainage of pus and the subsidence of swelling.

Indications Thirst in febrile diseases; dry cough due to *heat* in the lung; diabetes and wasting-thirst caused by internal *heat*; sores and abscess.

Usage and dosage 10-15 g.

Precaution Incompatible with Radix Aconiti and allied drugs.

Storage Preserve in a dry place, protected from moth.

Radix Vladimiriae
(川木香, Chuanmuxiang)

Common Vladimiria Root

Common Vladimiria Root is the dried root of *Vladimiria souliei* (Franch.) Ling or *Vladimiria souliei* (Franch.) Ling var. *cinerea* Ling (Fam. Compositae). The drug is collected in autumn, removed from rootlet, soil and gelatinous matter on root stock, and dried.

Description Cylindrical or semicylindrical with longitudial furrows, somewhat curved, 10-30 cm long, 1-3 cm in diameter. Externally yellowish-brown or deep brown, longitudinally wrinkled, showing numerous fine veins like vegetable sponge at the place where the outer bark fallen off; root stocks occasionally with black viscous gelatinous substance, commonly known as "oil head". Relatively light, texture hard and fragile, easily broken, fracture yellowish-white or yellow, with sparsely scattered deep yellow oil dots and some clefts, wood broad, with radial striations, sometimes the central part rotten-wood-like. Odour, slightly aromatic; taste, bitter, sticky on chewing.

Identification (1) Transverse section: Cork consisting of several layers of brown cells. Phloem ray relatively broad; sieve tube groups alternally arranged with fibre bundles radially, xylem vessel groups alternated with fibre bundles either, forming regular radiated pattern. Cambium ring undulate, fibre bundles yellow, lignified, accompanied by stone cells. Pith intact or withered. Oil cavities scattered in rays and throughout parenchyma in pith. Inulin found in parenchymatous cells.

(2) To 2 g of the powder add 20 ml of ether, ultrasonicate for 20 minutes and filter. Evaporate the filtrate to dryness, dissolve the residue with 1 ml of methanol as the test solution. Prepare a solution of Radix Vladimiriae reference

drug in the same manner as the reference drug solution. Carry out the method for thin layer chromatography (Appendix Ⅵ B), using silica gel G as the coating substance and a mixture of toluene and ethyl acetate (19 : 1) as the mobile phase. Apply separately 5μl of each of the two solutions to the plate. After developing and removal of the plate, dry in air, spray with a 5% solution of vanillin in sulfuric acid and heat to the spots clear. The spots in the chromatogram obtained with the test solution correspond in position and colour to the spots in the chromatogram obtained with the reference drug solution.

Total ash Not more than 4.0 per cent (Appendix Ⅸ K).

Processing *Radix Vladimiriae* Eliminate foreign matter and "oil head", wash clean, soften thoroughly, cut into thick slices, and dry.

Radix Vladimiriae (*roasted*) Spread several layers of rough paper made of straw in a wired shallow basket, put a layer of the slices of Radix Vladimiriae on every layer of the paper, cover the slices with the paper, roast on a coke stove or in drying shed until the volatile oil is absorbed by paper and then take out, and dry in the air.

Action To promote the flow of *qi* to relieve pain.

Indications Distending pain in the epigastrium and abdomen with borborygmi, diarrhea, and tenesmus; discomfort in the hypochondriac regions, pain in liver and gall bladder diseases.

Usage and dosage 3-9 g.

Storage Preserve in a cool and dry place.

Radix Zanthoxyli
(两面针, Liangmianzhen)

Shinyleaf Pricklyash Root

Shinyleaf Pricklyash Root is the dried root of *Zanthoxylum nitidum* (Roxb.) DC. (Fam. Rutaceae). The drug is collected all year round, washed clean, sliced or sectioned, and dried.

Description Occurring in thick slices or cylindrical sections, 2-20 cm long, 0.5-6 (10) cm thick. Externally pale brownish-yellow or pale yellow, exhibiting bright yellow or yellowish-brown subrounded lenticel-like scars. Cut surface rather smooth, bark pale brown, wood pale yellow, showing concentrical annulations and dense pores. Texture hard. Odour, slightly aromatic; taste, pungent, numb and bitter.

Identification (1) Tranverse section: Cork consisting 10-15 rows of cells. Phloem scattered with a few prisms of calcium oxalate, and oil cells, 52-122 μm in long diameter, 28-87 μm in short diameter, the outside of phloem showing some lignified fibres, single or 2-5 in groups. In xylem vessels 35-98 μm in diameter, surrounded by fibre bundles; woody rays 1-3 rows of cells in width, with simple pits. Parenchymatous cells packed with starch granules.

(2) Add 15 ml of ethanol to 1 g of the reference drug of Radix Zanthoxyli, warm macerate for 30 minutes then ultrasonicate for 30 minutes, filter. Evaporate the filtrate to dryness, dissolve the residue in 1 ml of ethanol as the reference drug solution. Carry out the method for thin layer chromatography (Appendix Ⅵ B), using silica gel G as the coating substance and a mixture of benzene, ethyl acetate, methanol, isopropanol and strong ammonia TS (20 : 5 : 3 : 1 : 0.12) as the mobile phase. Apply separately to the plate 2 μl of each of the reference drug solution, the test solution and the reference solution both obtained under Assay. After developing in a chamber pre-equilibrated with mobile phase for 10 minutes and removal of the plate, dry in air and examine under ultraviolet light at 365 nm. The fluorescent spots in the chromatogram obtained with the test solution correspond in colour and position to the spots in the chromatogram obtained with the reference drug solution, and a light yellow fluorescent spot obtained with the test solution corresponds in colour and position to the spot in the chromatogram obtained with the reference solution.

(3) Dissolve ethoxychelerythrine CRS in methanol to produce a solution containing 1 mg per ml as the reference solution. Carry out the method for thin layer chromatogram (Appendix Ⅵ B), using silica gel G as the coating substance and a mixture of toluene, ethyl acetate and methanol (25 : 2 : 0.1) as the mobile phase. Apply separately to the plate 2 μl of each of the reference solution, the reference drug solution obtained under the test (2) of Identification and the test solution obtained under Assay. After developing in a chamber pre-equilibrated with mobile phase for 10 minutes and removal of the plate, dry in air, examine under ultraviolet light at 365 nm. The fluorescent spots in the chromatogram obtained with the test solution correspond in colour and position to the spots in the chromatogram obtained with the reference drug solution, and an orange-yellow fluorescent spot corresponds in colour and position to the spot in the chromatogram obtained with reference solution.

Zanthoxylum nitidum (Roxb.) DC. f. *fastuosum* How ex Huang Dissolve toddalolactone CRS in ethanol to produce a solution containing 1 mg per ml as the reference solution. Concentrate 4 ml of the test solution obtained under Assay to about 2 ml as the test solution. Carry out the method for thin layer chromatography (Appendix Ⅵ B), using silica gel G as the coating substance and a mixture of petroleum ether (60-90℃), chloroform and methanol (2 : 13 : 1) as the mobile phase. Apply separately to the plate 2 μl of each of the two solutions. After developing in a chamber pre-equilibrated with mobile phase for 20 minutes and removal of the plate, dry in air, examine under ultraviolet light at 365 nm. The fluorescent spots in the chromatogram obtained with the test solution should not correspond in colour and position to the spot in the chromatogram obtained with the reference solution.

Extractives Carry out the method for determination of ethanol soluble extractives by hot extraction (Appendix Ⅹ A), using ethanol as the solvent, not less than 5.5 per cent.

Assay To 1 g coarse powder, weighed accurately, in a Soxhlet's extractor, extract with 100 ml of methanol under reflux until the reflux fluid becomes colourless. Concentrate the extract on a water bath to about 2 ml, transfer it into a 10 ml volumetric flask, add methanol to volume, mix well and use it as the test solution. Dissolve nitidine chloride CRS, weighed accurately, in methanol to produce a solution containing 0.5 mg per ml as the reference solution. Carry out the method for thin layer chromatography (Appendix Ⅵ B), using silica gel G mixed with sodium carboxymethylcellulose as the coating substance, a mixture of benzene, ethyl acetate, methanol, isopropanol and strong ammonia TS (20 : 5 : 3 : 1 : 0.12) as the mobile phase. Apply alternatively 4 μl of test solution, 1 μl and 4 μl of reference solution to the plate. After developing and removal of the plate, dry in air, examine under ultraviolet light at 365 nm. Carry out the thin layer chromatography (thin layer chromatographic scanning method, Appendix Ⅵ B), scan the chromatogram at wavelength of $\lambda_S = 300$ nm, $\lambda_R = 210$ nm, measure the integration values of absorbance from the test solution and the reference solution, and calculate the content.

It contains not less than 0.25 per cent of nitidine ($C_{21}H_{18}NO_2$),

calculated with reference to the dried drug.

Action To promote the flow of *qi* to relieve pain, eliminate blood stasis, dispel *wind* and promote blood circulation.

Indications Traumatic injuries, rheumatic arthralgia, stomachache and teethache due to stagnation of *qi* and blood, venomous snake bite; applied topically for burns and scalds.

Usage and dosage 5-10 g; appropriate quantity for external use. Abrasive powder mixed with liquid for application or simmer in water for washing the affected part.

Precaution Overdose is avoided; incompatible with sour taste food.

Storage Preserve in a dry place, protected from moisture and moth.

Ramulus Cinnamomi (桂枝, Guizhi)

Cassia Twig

Cassia Twig is the dried young branch of *Cinnamomum cassia* Presl (Fam. Lauraceae). The drug is collected in spring and summer, removed from leaf, dried in the sun, or dried in the sun after sliced.

Description Long cylindrical, much-branched, 30-75 cm long, thick end 0.3-1 cm in diameter. Externally brown to reddish-brown, with longitudinal ridges, fine wrinkles, dotted leaf-scars, branch-scars and bud-scars, lenticels dotted. Texture hard and fragile, easily broken. Slices 2-4 mm thick, cut surface showing reddish-brown in bark, yellowish-white to pale yellowish-brown in wood, pith subsquare. Odour, characteristically aromatic; taste, sweet and slightly pungent, relatively strong for bark.

Identification (1) Transverse section: Epidermis consisting of 1 layer of cells, non-glandular hairs unicellular, visible in young branches. Cork consisting of 3-5 layers of cells, the inmost cells with thickened outer walls. Oil cells and stone cells scattered in cortex. Groups of stone cells in pericycle interruptedly arranged in a ring, accompanied by fibre bundles. Secretory cells and fibres scattered in phloem. Cambium distinct. Xylem rays 1-2 cells wide, containing brown contents; vessels scattered singly or 2 to several aggregated; xylary fibres with relatively thin walls, and differentiated uneasily from xylary parenchymatous cells. In pith, the walls of cells slightly thickened and lignified. Cells of rays containing fine needle crystals of calcium oxalate.
(2) To 0.5 g of the powder add 10 ml of ethanol, stoppered tightly, macerate for 20 minutes with frequent shaking, filter, use the filtrate as the test solution. Dissolve cinnamic aldehyde CRS in ethanol to produce a solution containing 1 μl per ml as the reference solution. Carry out the method for thin layer chromatography (Appendix VI B), using silica gel G as the coating substance and a mixture of petroleum ether (60-90℃) and ethyl acetate (17 : 3) as the mobile phase. Apply separately to the plate 10-15 μl of the test solution and 2 μl of the reference solution. After developing and removal of the plate, dry in air, and spray with a 0.1% solution of 2,4-dinitrophenyl-hydrazine in ethanol. The orange-red spot in the chromatogram obtained with the test solution corresponds in position and colour to the spot in the chromatogram obtained with the reference solution.

Water Not more than 12.0 per cent (Appendix IX H, method 2).

Total ash Not more than 3.0 per cent (Appendix IX K).

Extractives Carry out the method for determination of ethanol-soluble extractives (Appendix X A, the hot extraction method), using ethanol as the solvent, not less than 4.0 per cent.

Processing Eliminate foreign matter, soak briefly, wash clean, soften thoroughly, cut into thin slices, and dry in air. Slices subrounded, elliptic, or sections irregular, possessing dotted lenticels and longitudinal ridges, bark reddish brown, wood yellowish-white or pale yellowish-brown, pith subrounded or slightly square.

Action To induce perspiration to release the exterior, warm the *channels* and stimulate menstruation, reinforce *yang*, relieve palpitation, and send down adverse rising *qi*.

Indications Common cold; epigastric pain with cold feeling; amenorrhea due to *cold* in blood; arthralgia; edema; cardiac palpitation; gastro-intestinal neurosis with a feeling of gas rushing up through the chest to the throat from the lower abdomen.

Usage and dosage 3-9 g.

Storage Preserve in a cool and dry place.

Ramulus et Folium Picrasmae (苦木, Kumu)

Indian Quassiawood

Indian Quassiawood is the dried branch and leaf of *Picrasma quassioides* (D. Don) Benn. (Fam. Simarubaceae). The drug is collected in summer and autumn, and dried.

Description Branches cylindrical, varying in length, 0.5-2 cm in diameter; externally greyish-green or brownish-green, with fine and dense longitudinal striations and numerous dotted lenticels; texture fragile, easily broken, fracture uneven, pale yellow, the young branches pale-coloured, with relatively large pith. Leaves compound, odd-pinnate, easily falling off; leaflets elongated ovate-elliptical or ovate-lanceolate, subsessile, 4-16 cm long, 1.5-6 cm wide, apex acute, base oblique or slightly rounded, margins crenate, both surfaces usually green, sometimes the lower surface pale purplish-red, pubescent along the midrib. Odour, slight; taste, extremely bitter.

Identification (1) Powder: Yellowish-green. Upper epidermal cells of the leaf polygonal; stomata anomocytic, usually visible on the lower epidermis. Mesophyll cells frequently containing clusters of calcium oxalate, fibre bundles surrounded by parenchymatous cells containing clusters or prisms of calcium oxalate, forming crystal fibres.
(2) Macerate 1 g of the powder in 10 ml of methanol overnight, filter, evaporate the filtrate to dryness, dissolve the residue in 10 ml of methanol as the test solution. Prepare a solution with 1 g of Ramulus et Folium Picrasmae reference drug as the reference drug solution in the same manner. Carry out the method for thin layer chromatography (Appendix VI B) using silica gel G containing sodium carboxymethylcellulose as the coating substance and a mixture of chloroform and methanol (85 : 15) as the mobile phase. Apply separately to the plate 10 μl of each of the above two solutions. After developing and removal of the plate, dry in air, spray with modified potassium iodobismuthate TS. The spots in the chromatogram obtained with the test solution correspond in position and colour to the spots in the chromatogram obtained with the reference drug solution.

Processing Eliminate foreign matter, wash the branches clean, soften thoroughly, cut into slices, and dry in the

sun; spray the leaves with clean water, moisten briefly, cut into slivers, and dry in the sun.

Action To remove *heat* and *damp*, and counteract *toxicity*.

Indications Common cold caused by *wind-heat*, painful swelling throat, diarrhea and dysentery, eczema, boils, venomous snake bite.

Usage and dosage 3-4.5 g of branch or 1-3 g of leaf; appropriate quantity for external use.

Storage Preserve in a dry place.

Ramulus Mori (桑枝, Sangzhi)

Mulberry Twig

Mulberry Twig is the dried young branch of *Morus alba* L. (Fam. Moraceae). The drug is collected from late spring to early summer, removed from leaf, and dried in the sun, or cut into slice while fresh, and dried in the sun.

Description Long cylindrical, branched occasionally, varying in length, 0.5-1.5 cm in diameter. Externally greyish-yellow or yellowish-brown, with numerous yellowish-brown dotted lenticels and fine longitudinal striations, with greyish-white and slightly semicircular leaf scars, and yellowish-brown axillary buds. Texture hard and tenacious, uneasily broken, fracture fibrous. Slices 0.2-0.5 cm thick, bark relatively narrow, wood yellowish-white, medullary rays radiate, pith white or yellowish-white. Odour, slight; taste, weak.

Identification Powder: Pale greyish-yellow. Fibres numerous, scattered singly or in bundles, pale yellow or colourless, slightly sinuous, 10-30 μm in diameter, walls thickened, 5-15 μm, lumina small. Stone cells pale yellow, subrounded or subsquare, 15-40 μm in diameter, walls thickened, 5-20 μm, lumina small. Sclerenchymatous cells grouped or scattered singly, similar to the stone cells in the shape and size, containing 1-2 prisms of calcium oxalate. Prisms included in the sclerenchymatous cells or scattered, 5-20 μm in diameter.

Extractives Carry out the method for determination of ethanol-soluble extractives (Appendix X A, the hot extraction method), using ethanol as the solvent, not less than 3.0 per cent.

Processing *Ramulus Mori* For the unsliced, wash clean, soften thoroughly, cut into thick slices, and dry in the sun.

Ramulus Mori (*Stir-baked*) Stir-bake the slices of Ramulus Mori as described under the method for simple stir-baking (Appendix II D) to a yellowish colour produced.

Action To relieve rheumatic arthralgia.

Indications Aching and numbness of joints, particularly of the shoulders and arms.

Usage and dosage 9-15 g.

Storage Preserve in a dry place.

Ramulus Uncariae cum Uncis (钩藤, Gouteng)

Gambir Plant

Gambir Plant is the dried hook-bearing branch of *Uncaria rhynchophylla* (Miq.) Jacks., *Uncaria macrophylla* Wall., *Uncaria hirsuta* Havil., *Uncaria sinensis* (Oliv.) Havil. or *Uncaria sessilifructus* Roxb. (Fam. Rubiaceae). The drug is collected in autumn and winter, removed from leaf, cut into section, and dried in the sun.

Description Cylindrical or subsquare, 2-3 cm long, 2-5 mm in diameter. Externally reddish-brown to purplish-red, with fine longitudinal striations and glabrous; or yellowish-green to greyish-brown, sometimes with white dotted lenticels, covered with yellowish-brown pubescences. Most nodes bearing with two opposite downward curved hooks (sterile peduncles), someones with a hook at one side and a raised scar at another side; hooks slightly flattened or rounded, apex acute, base relatively broad; dotted scars of falling petiole and ring-shaped scars of stipule visible on the branch connected with the hook base. Texture hard and tenacious, fracture yellowish-brown, bark fibrous, pith yellowish-white or hollowed. Odour, slight; taste, weak.

Identification Moisten 1 g of the powder with concentrated ammonia TS, add 30 ml of chloroform, extract for 30 minutes, filter, evaporate the filtrate to dryness. Dissolve the residue in 5 ml of hydrochloric acid solution (1→100), filter into three test tubes. To the first tube add 1-2 drops of potassium iodobismuthate TS; a yellow precipitate is produced; to the second tube add 1-2 drops of mercuric potassium iodide TS, a white precipitate is produced; to the third tube add 1-2 drops of silicotungstic acid TS, a white precipitate is produced.

Water Not more than 10.0 per cent (Appendix IX H, method 1).

Total ash Not more than 3.0 per cent (Appendix IX K).

Extractives Carry out the method for determination of ethanol-soluble extractives (Appendix X A, the hot extraction method), using ethanol as the solvent, not less than 6.0 per cent.

Action To remove *heat*, subdue hyperactivity of the liver, and arrest convulsion.

Indications Headache, dizziness, convulsion, eclampsia, hypertension.

Usage and dosage 3-12 g, added when the decoction is nearly done.

Storage Preserve in a dry place.

Realgar (雄黄, Xionghuang)

Realgar

Realgar is a mineral of sulfides of realgar group, containing mainly arsenic disulfide (As_2S_2). The drug is collected, removed from foreign matter.

Description Aggregates of lumpy or granulous masses, irregular, dark red or orange-red; streak, pale orange-red; crystal surface showing diamond-like lustre. Texture fragile, easily broken, fracture with resin-like lustre. Odour, slightly stinking characteristic; taste, weak.
Powder refined ore: In powders or powder aggregates. Texture lax and fragile, powdered on kneading. Orange-yellow, lustreless.

Identification (1) To 10 mg of the powder, moisten with water, add 2 ml of nitric acid solution saturated with potassium chlorate to dissolve, add barium chloride TS, a

large quantity of white precipitate is produced. Allow to stand, decant the supernatant acid solution, add 2 ml of water to the precipitate and shake, it is not dissolved.
(2) Melt 0.2 g of the powder in a crucible, a white or yellowish-white flame is produced with white heavy fume. Cover the crucible with a piece of glass, a white condensate is produced. Dissolve a small quantity of the condensate in water in a test tube by boiling, filter if necessary, then add several drops of hydrogen sulfide TS; a yellow colour is produced, and a yellow flocculent precipitate is produced on adding dilute hydrochloric acid TS, then add ammonium carbonate TS, the precipitate is dissolved.

Arsenic trioxide To 0.94 g of the fine powder, accurately weighed, add 20 ml of dilute hydrochloric acid TS, stir constantly for 30 minutes, filter, wash the residue with two 10-ml quantities of dilute hydrochloric acid TS by stirring for 10 minutes. Combine the filtrate and washings into a 500 ml volumetric flask, add water to volume, mix well. Measure accurately 10 ml into a 100 ml volumetric flask, dilute with water to volume, mix well. To 2 ml, accurately measured, add 5 ml of hydrochloric acid and 21 ml of water. Carry out the limit test for arsenic (Appendix Ⅸ F, method 1), any stain produced is not more intense than that produced by standard arsenic solution.

Assay Heat about 0.1 g of the powder, accurately weighed, in a 250 ml conical flask with 1 g of potassium sulfate, 2 g of ammonium sulfate and 8 ml of sulfuric acid until the solution becomes clear. Allow to cool, add 50 ml of water slowly, heat to boil gently for 3-5 minutes and allow to cool. Add 2 drops of phenolphthalein IS, neutralize with sodium hydroxide solution (40→100) until it becomes pale red, allow to cool, neutralize with sulfuric acid solution (0.25 mol/L) to colourless. Add 5 g of sodium bicarbonate, shake well, titrate with iodine (0.1 mol/L) VS, towards the end of titration, add 2 ml of starch IS, continue to titrate until a purplish-blue colour is produced. Each ml of iodine (0.1 mol/L) VS is equivalent to 5.348 mg of arsenic disulfide (As_2S_2).
It contains not less than 90.0 per cent of arsenic, calculated as arsenic disulfide (As_2S_2).

Processing *Realgar Powder* Levigate Realgar as described under the method for levigating (Appendix Ⅱ D) and dry in the shade. Carry out the above limit test for arsenic trioxide, the result complies with the requirements.

Action To counteract *toxicity*, to kill parasites, and cure malarial.

Indications Carbuncles, boils; snake-bite, insect-bite; abdominal pain due to intestinal parasitosis; infantile convulsion; malaria.

Usage and dosage 0.05-0.1 g, used in making pills or powders; for external use, appropriate quantity for fumigation or topical application.

Precaution Used with caution for oral administration, and long-term oral administration should be avoided. Contraindicated in pregnancy.

Storage Preserve in a well closed container, stored in a dry place.

Receptaculum Nelumbinis (莲房, Lianfang)

Lotus Receptacle

Lotus Receptacle is the dried receptacle of *Nelumbo nucifera* Gaertn. (Fam. Nympha eaceae). The drug is collected in autumn when the fruit is ripe, removed from the fruits, and dried in the sun.

Description Obconical or funnel-shaped, frequently dilacerate, 5-8 cm in diameter, 4.5-6 cm high. Externally greyish-brown to purplish-brown, with fine longitudinal striations and wrinkles. The top with numerous rounded hollows and the base with the remains of pedicel. Texture lax, broken fracture sponge-like, brown. Odour, slight; taste, slightly astringent.

Identification (1) Powder: Yellowish-brown. Epidermal cells polygonal in surface view, papilla double circlet-shaped. Clusters of calcium oxalate numerous, 10-54 μm in diametre. Brown cells subsquare or subrounded, walls slightly thickened, containing reddish-brown contents in lumina. Spiral and annular vessels 8-80 μm in diameter. Fibres in bundles, pitted, 11-35 μm in diameter.
(2) Macerate warmly 0.5 g of the powder in 5 ml of ethanol for several minutes and filter. To the filtrate add a small quantity of magnesium powder and 1-2 drops of hydrochloric acid; the solution turns to red gradually.

Water Carry out the method for the determination of water (Appendix Ⅸ H, method 1), not more than 14.0 per cent.

Total ash Not more than 7.0 per cent (Appendix Ⅸ K).

Processing *Receptaculum Nelumbinis* Eliminate dust, and cut into pieces.

Receptaculum Nelumbinis (carbonized) Carbonize the clean Receptaculum Nelumbinis as described under the method for carbonizing by calcining (Appendix Ⅱ D).

Action To remove *blood stasis* and arrest bleeding.

Indications Abnormal uterine bleeding, hematuria, hemorrhoidal bleeding, lochiorrhea due to blood stagnation after child birth.

Usage and dosage 4.5-9 g.

Storage Preserve in a dry place, protected from moisture.

Resina Ferulae (阿魏, Awei)

Chinese Asafetida

Chinese Asafetida is the resin of *Ferula sinkiangensis* K. M. Shen or *Ferula fukanensis* K. M. Shen (Fam. Umbelliferae). The stem is incised from the upper part to the lower part at the flowering and early fruiting stages in the end of spring and early summer. The exuding emulsive resin is collected, and dried in the shade.

Description Irregular lumps or resinous substance. Colour varying in intensity, externally waxy-yellow to brownish-yellow. Lumps light, texture waxy; fracture somewhat pored; freshly cut surface pale, gradually darken on storage. Resinous substance viscid, greyish-white. odour, strongly and lastingly characteristic and alliaceous; taste, pungent, with the burning sensation on chewing.

Identification (1) Weigh accurately 0.2 g of the powder in a 25 ml volumetric flask, add dehydrated ethanol, ultrasonicate for 10 min, add dehydrated ethanol to volume, mix well, filter. Transfer 0.2 ml of the filtrate to a 50 ml volumetric flask, add dehydrated ethanol to volume, and mix well. Carry out the method for ultraviolet spectrophotometry and

colourimetry (Appendix Ⅴ A). The light absorbance of the resulting solution exhibits a maximum at 323 nm.
(2) To 0.5 g of the powder with 20 ml of dilute hydrochloric acid TS, ultrasonicate for 10 minutes, get supernatant fluid, centrifugate when necessary, extract with ether twice, 40 ml, 20 ml respectively. Combine the ether extracts, and evaporate to dryness, dissolve the residue in 1 ml of dehydrated ethanol as the test solution. Dissolve ferulaic acid CRS in a mixture of ethanol and 5% glacial acetic acid (1 : 4) to produce a solution containing 1 mg ferulaic acid per ml as the reference solution. Carry out the method for thin layer chromatography (Appendix Ⅵ B), using silica gel G as the coating substance and a mixture of hexamethylene, dichloromethane and glacial acetic acid (8 : 8 : 1) as the mobile phase. Apply separately to the plate 5 μl of each of the two solutions. After developing and removal of the plate, dry in air, spray with 1% ferric oxide in ethanol and 1% potassium ferricyanide (1 : 1) (freshly prepared). The spot in the chromatogram obtained with the test solution corresponds in position and colour to the spot obtained with the reference solution.

Water Carry out the determination of water (Appendix Ⅸ H, method 1), not more than 8.0 per cent.

Total ash Not more than 5.0 per cent (Appendix Ⅸ K).

Acid-insoluble ash Not more than 1.0 per cent (Appendix Ⅸ K).

Extractives Carry out the hot extraction method for determination of ethanol-soluble extractives (Appendix Ⅹ A), using ethanol as the solvent, not less than 20.0 per cent.

Assay Carry out the method for determination of volatile oil (Appendix Ⅹ D), using 5-10 g. It contains not less than 10.0 per cent (ml/g) of volatile oil.

Action To remove food stagnancy, disintegrate masses, and kill worms.

Indications Stagnation of undigested meat, mass in the abdomen due to *blood stasis*, abdominal pain due to intestinal parasitonis.

Usage and dosage 1-1.5 g, usually made into pills, powder or plaster to use.

Precaution Contraindicated in pregnancy.

Storage Preserve in well closed containers, stored in a cool and dry place.

Resina Liquidambaris (枫香脂, Fengxiangzhi)

Beautiful Sweetgum Resin

Beautiful Sweetgum Resin is the dried resin of *Liquidambar formosana* Hance (Fam. Hamaelidaceae). The trunk is incised and the resin is running out in July and August. The drug is collected from October to next April, and dried in the shade.

Description Irregular pieces, pale yellow or yellowish-brown, translucent or opaque. Texture, fragile; fracture lustrous. Odour, aromatic; taste, weak.

Identification (1) Burn a small quantity of the resin, the flame has much fume with characteristic and aromatic odour.
(2) Place 50 mg in a test tube, add 5 ml of carbon tetrachloride, shake to dissolve, add 2 ml of sulfuric acid along the tube wall, a red ring is produced at the junction of the two layers.
(3) Suspend 0.2 g in 5 ml of carbon tetrachloride with shaking, add 3 ml of nitric acid, shake well gently, allow to stand until separation takes place, a pale red to reddish-orange colour is produced in the upper layer.

Action To promote blood circulation to relieve pain, counteract *toxicity*, stimulate tissue regeneration, and reduce *heat* from blood.

Indications Traumatic injuries, swelling and pain of carbuncles and boils, spitting of blood, epistaxis and traumatic hemorrhage.

Usage and dosage 1.5-3 g, used in making pills or powder; appropriate quantity for external use.

Storage Preserve in well closed containers, and stored in a cool place.

Resina Toxicodendri (干漆, Ganqi)

Dried Lacquer

Dried Lacquer is the dried purified resin of *Toxicodendron vernicifluum* (Stokes) F. A. Barkl. (Fam. Anacardiaceae). Usually the residue on the bottom of vessel containing lacquer is collected, and dried.

Description Irregular masses, dark-brown or brown, externally rough, with honeycomb-like fine pores or granular. Texture hard, uneasily broken, fracture uneven. Odour, characteristic and unpleasant.

Identification (1) Burn a small piece in a porcelain evaporating dish, dark fumes and strong lacquer odour are produced.
(2) To 1 g of the powder add 10 ml of ethanol, heat on a water bath for 5 minutes, cool and filter. To 1 ml of the filtrate, add 1-2 drops of ferric chloride TS, a dark green colour is produced.

Processing Burn Resina Toxicodendri to withered; or break to small pieces and stir-bake to withered until it gives no dark fumes, allow to cool after removal.

Action To eliminate *blood stasis*, promote digestion, and kill worms.

Indications Amenorrhea and masses in the abdomen caused by *blood stasis*; abdominal pain due to intestinal parasitosis.

Usage and dosage 2.4-4.5 g.

Precaution Used with caution in pregnancy and debility without *blood stasis*.

Storage Preserve in well closed containers, protected from fire.

Retinervus Luffae Fructus (丝瓜络, Sigualuo)

Luffa Vegetable Sponge

Luffa Vegetable Sponge is the dried vascular bundles of ripe fruit of *Luffa cylindrica* (L.) Roem. (Fam. Cucurbitaceae). The drug is collected in summer and autumn when the fruit is ripe, the

pericarp turns to yellow and the inner part withered, removed from exocarp and sarcocarp, washed clean, dried in the sun, and removed from the seed.

Description Interweaved silvery vascular bundles, mostly prolate cylindrical, somewhat curved, 30-70 cm long, 7-10 cm in diameter. Externally pale yellowish-white. Texture light, tenacious and springy, uneasily broken. 3 loculi visible, transverse section hollowed. Odour, slight; taste, weak.

Processing Remove the remained seeds and exocarp, cut into sections.

Action To remove obstruction from the collaterals, promote blood circulation, and dispel *wind*.

Indications Arthralgia with muscular contracture; distension and pain in the chest and costal regions, galactostasis.

Usage and dosage 4.5-9 g.

Storage Preserve in a dry place.

Rhizoma Acori Calami (藏菖蒲, Zangchangpu)

Tibet Sweetflag Rhizome

Tibet Sweetflag Rhizome is a drug commonly used by Tibetan nationality. It is the dried rhizome of *Acorus calamus* L. (Fam. Araceae). The drug is collected in autumn and winter, removed from fibrous roots and soil, and dried in the sun.

Description Compressed-cylindrical, slightly curved, 4-20 cm long, 0.8-2 cm in diameter. Externally greyish-brown to brown, nodes distinct, internodes 0.5-1.5 cm long, with longitudinal wrinkles, one surface with dense and rounded remains of fibrous roots; leaf scars obliquely triangular, arranged alternately, stem-base remains at the lateral surface surrounded by remains of scaly leaf bases and hairy fibrous roots. Texture hard, fracture pale brown, an endodermis ring distinct, numerous brown dotted oil cells visible. Odour, strong and characteristic; taste, pungent.

Identification (1) Transverse section: Epidermal cells subsquare, with thickened outer walls, brown. Cortex broad, scattered with fibre bundles and collateral leaf-trace bundles, arenchyma visible, loosely net-like arranged; composed of parenchymatous cells; endodermis distinct. Stele scattered with numerous amphivasal or collateral vascular bundles. Parenchyma scattered with brown oil cells, and containing starch granules.
(2) To 2 g, in powder, add 5 ml of ethanol, heat under reflux for 20 minutes, allow to cool, and use the supernatant as the test solution. Prepare a solution of 2 g of Rhizoma Acori Calami reference drug in the same manner as the reference drug solution. Carry out the method for thin layer chromatography (Appendix Ⅵ B), using silica gel G as the coating substance and chloroform as the mobile phase. Apply separately to the plate 5 μl of each of the two solutions. After developing and removal of the plate, dry in air, spray with a 10% solution of sulfuric acid in ethanol and heat at 105℃ to the spots clear. The major spots in the chromatogram obtained with the test solution correspond in position and colour to the spots in the chromatogram obtained with the reference drug solution.

Assay Carry out the method for determination of volatile oil (Appendix Ⅹ D).
It contains not less than 2.0 per cent (ml/g) of volatile oil.

Processing Eliminate foreign matter, cut into slices, and dry.

Action To warm the stomach, counteract inflammation and alleviate pain.

Indications Declined *yang* of stomach, indigestion, stagnated food, diphtheria and anthracnose, etc.

Usage and dosage 3-6 g.

Storage Preserve in a ventilated dry place.

Rhizoma Acori Tatarinowii (石菖蒲, Shichangpu)

Grassleaf Sweetflag Rhizome

Grassleaf Sweetflag Rhizome is the dried rhizome of *Acorus tatarinowii* Schott (Fam. Araceae). The drug is collected in autumn and winter, removed from fibrous roots and soil, and dried in the sun.

Description Compressed-cylindrical, frequently tortuous, often branched, 3-20 cm long, 0.3-1 cm in diameter. Externally brown or greyish-brown, rough, with uneven annulations, internodes 2-8 mm long, with fine longitudinal wrinkles, one surface with remains of fibrous roots or rounded root scars; leaf scars triangular, arranged alternately, some with hairy and scaly remains of leaf bases. Texture hard, fracture fibrous, whitish or reddish, an endodermis ring distinct, numerous dotted vascular bundles and brown oil cells visible. Odour, aromatic; taste, bitter and slightly pungent.

Identification (1) Transverse section: Epidermal cells with thickened outer walls, brown, some containing reddish-brown contents. Cortex broad, scattered with fibre bundles and collateral leaf-trace bundles, and each surrounded by a bundle sheath of lignified fibres, endodermis distinct. Amphivasal or collateral vascular bundles scattered throughout the stele, with less fibrous bundle sheath. Fibre bundles and bundle sheaths surrounded by cells containing prisms of calcium oxalate, forming crystal fibres. Parenchyma scattered with subrounded oil cells, and containing starch granules.
(2) To the volatile oil obtained under Assay, add petroleum ether (60-90℃) to produce a solution containing 2 μl per ml as the test solution. Prepare a solution of Rhizoma Acori Tatarinowii reference drug in the same manner as the reference solution. Carry out the method for thin layer chromatography (Appendix Ⅵ B), using silica gel G mixed with 0.5% sodium carboxymethylcellulose as the coating substance and a mixture of petroleum ether (60-90℃) and ethyl acetate (8 : 2) as the mobile phase. Apply separately to the plate 1 μl of each of the two solutions. After developing and removal of the plate, dry in air, allow to stand for 1 hour and examine under ultraviolet light at 365 nm. The fluorescent spots in the chromatogram obtained with the test solution correspond in position and colour to the spots in the chromatogram obtained with the reference drug solution. Expose to iodine vapour to the spots clear. The spots in the chromatogram obtained with the test solution correspond in position and colour to the spots in the chromatogram obtained with the reference drug solution.

Total ash Not more than 10.0 per cent (Appendix Ⅸ K).

Assay Carry out the method for the determination of volatile oil (Appendix Ⅹ D).
It contains not less than 1.0 per cent (ml/g) of volatile oil.

Processing Eliminate foreign matter, wash clean, soften,

cut into thick slices and dry.

Action To eliminate *damp* and *phlegm*, whet appetite, and restore consciousness and improve intellegence.

Indications Stuffiness sensation in the epigastrium with anorexia; severe dysentery with total loss of appetite; impairment of consciousness in epilepsy; forgetfulness and impaired hearing.

Usage and dosage 3-9 g.

Storage Preserve in a dry place, protected from mould.

Rhizoma Alismatis (泽泻, Zexie)

Oriental Waterplantain Rhizome

Oriental Waterplantian Rhizome is the dried tuber of *Alisma orientalis* (Sam.) Juzep. (Fam. Alismataceae). The drug is collected in winter when the stem withered, washed clean, dried, and removed from the fibrous roots and coarse outer tissue.

Description Subspherical, elliptical or ovate, 2-7 cm long, 2-6 cm in diameter. Externally yellowish-white or yellowish-brown, with irregular transverse-annular shallow furrows and numerous small raised fibrous root scars, occasionally tuberculate bud scars attached to the base. Texture compact, fracture yellowish-white, starchy, with numerous small pores. Odour, slight; taste, slightly bitter.

Identification Powder: Yellowish-brown. Starch granules numerous, simple granules long-ovoid, subspherical or ellipsoid, 3-14 μm in diameter, hilum V-shaped, shortly slit-shaped or Y-shaped; compound granules of 2-3 components. Parenchymatous cells subrounded, with many elliptical pits aggvegated into pit areas. Anticlinal walls of endodermis cells sinuous, relatively thickened, lignified, with sparse and minute pit-canals. Oil cavities mostly broken, whole ones subrounded, 54-110 μm in diameter, sometimes oil drops in secretory cells visible.

Total ash Not more than 5.0 per cent (Appendix IX K).

Acid-insoluble ash Not more than 0.5 per cent (Appendix IX K).

Processing *Rhizoma Alismatis* Eliminate foreign matter, soak slightly, soften thoroughly, cut into thick slices, and dry.

Rhizoma Alismatis (Processed with salt) Stir-bake the slices of Rhizoma Alismatis as described under the method for stir-baking with salt-water (Appendix II D) to dryness.

Action To cause urination, and remove *damp-heat*.

Indications Edema with oliguria; diarrhea oliguria vertigo due to retention of morbid fluid; acute urinary infection with difficult painful urination; hyperlipemia.

Usage and dosage 6-9 g.

Storage Preserve in a dry place, protected from moth.

Rhizoma Alpiniae Officinarum (高良姜, Gaoliangjiang)

Lesser Galangal Rhizome

Lesser Galangal Rhizome is the dried rhizome of *Alpinia officinarum* Hance (Fam. Zingiberaceae). The drug is collected at the end of summer and the beginning of autumn, removed from fibrous roots and remaining leaf scales, washed clean, cut into sections, and dried in the sun.

Description Cylindrical, often curved, branched, 5-9 cm long, 1-1.5 cm in diameter. Externally brownish-red to dark brown, with fine and dense longitudinal wrinkles and greyish-brown sinuous annular nodes, internode 0.2-1 cm long, bearing round root scars on one side. Texture hard and tenacious, uneasy to break, fracture greyish-brown or reddish-brown, fibrous, stele occupying about 1/3 area of the rhizome. Odour, aromatic; taste, pungent.

Identification (1) Transverse section: The outer walls of epidermal cells thickened, some cells containing reddish-brown non-crystalline masses. Vascular bundles of leaf trace relatively abundan in cortex, collateral. Endodermis distinct. Collateral vascular bundle numerous in stele, vascular bundle sheath fibres arranged in a ring and lignified. Secretory cells abundantly scattered in parenchyma of cortex and stele, containing yellow or reddish-brown resinous contents. Parenchymatous cells filled with starch granules.
(2) Prepare a solution of 5 g of Rhizoma Alpiniae Officinarum reference drug in the same manner as described under Assay as the reference drug solution. Carry out the method for thin layer chromatography (Appendix VI B), using silica gel G as the coating substance and a mixture of toluene and ethyl acetate (19 : 1) as the mobile phase. Apply separately to the plate 10 μl of each of the test solution obtained under Assay and the above reference drug solution. After developing and removal of the plate, dry in air, spray with a 5% solution of vanillin in sulfuric acid, heat at 105℃ to the spots clear. The spots in the chromatogram obtained with the test solution correspond in position and colour to the spots obtained with the reference drug solution.

Water Carry out the method for determination of water (Appendix IX H, method 2), not more than 16.0 per cent.

Total ash Not more than 4.0 per cent (Appendix IX K).

Acid-insoluble ash Not more than 1.0 per cent (Appendix IX K).

Assay Carry out the method for gas chromatography (Appendix VI E).

Chromatographic system and system suitability Use 10% SE-54 as the stationary phase, and maintain the column temperature at 130℃. The temperature of injection port set at 190℃ and that of detector at 230℃. The number of theoretical plates of the column is not less than 1000, calculated with the reference to the peak of cineole.

Reference solution Weigh accurately a quantity of cineole CRS, dissolve in *n*-hexane to produce a solution containing 2 mg per ml.

Test solution Weigh accurately 5 g of the powder (crushed before use and through No. 3 sieve) to a rounded bottom flask, add 200 ml of water, connect with a volatile oil determination tube, add water through the top of determination tube until overflow to the flask, add 2-3 ml of

n-hexane and connect with reflux condenser. Heat under reflux to slightly boil for 2 hours, cool, separate the *n*-hexane layer and filter through a funnel covered with 1 g of anhydrous sodium sulfate to a 5 ml volumetric flask. Wash the inner wall of the determination tube with a small quantity of *n*-hexane, combine the washings into the same volumetric flask, dilute with *n*-hexane to volume, and mix well.

Procedure Accurately inject 2 μl of each of the reference solution and the test solution, respectively, into the column, and calculate the content.
It contains not less than 0.15 per cent of cineole ($C_{10}H_{18}O$), calculated with reference to the dried drug.

Processing Eliminate foreign matter, wash clean, soften thoroughly, cut into thin slices, and dry in the sun.

Action To dispel *cold* from the stomach, promote digestion and relieve pain.

Indications Epigastric pain with cold sensation; vomiting, belching and acid regurgitation due to *cold* in the stomach.

Usage and dosage 3-6 g.

Storage Preserve in a cool and dry place.

Rhizoma Anemarrhenae (知母, Zhimu)

Common Anemarrhena Rhizome

Common Anemarrhena Rhizome is the dried rhizome of *Anemarrhena asphodeloides* Bge. (Fam. Liliaceae). The drug is collected in spring or autumn, removed from fibrous roots and soil, dried in the sun.

Description Slat-shaped, slightly curved, somewhat compressed, branched occasionally, 3-15 cm long, 0.8-1.5 cm in diameter, with pale yellowish stem and leaf scars. Externally yellowish-brown to brown, the upper part exhibiting a concave groove and closely arranged annular nodes with dense yellowish-brown remains of leaf bases growing upward bilaterally; the lower part raised and somewhat shrivelled, exhibiting depressions or protruding dotted root scars. Texture hard, easily broken, fracture yellowish-white, Odour slight; taste, slightly sweetish, bitterish and viscous on chewing.

Identification Heat under reflux 2 g of the powder with 20 ml of ethanol for 40 minutes. To 10 ml of the supernatant add 1 ml of hydrochloric acid, heat under reflux for 1 hour and concentrate to about 5 ml. Add 10 ml of water, extract by shaking with 20 ml of benzene and evaporate the benzene extract to dryness. Dissolve the residue in 2 ml of benzene as the test solution. Dissolve sarsasapogenin CRS in benzene to produce a solution containing 5 mg per ml as the refernce solution. Carry out the method for thin layer chromatography (Appendix Ⅵ B), using silica gel G as the coating substance and a mixture of benzene and acetone (9 : 1) as the mobile phase. Apply separately to the plate 7 μl of each of the two solutions. After developing and removal of the plate, dry in air, and spray with a mixture of 8% solution of vanillin in absolute ethanol and sulfuric acid solution (7→10) (0.5 : 5), heat at 100℃ to the spots clear. The spot in the chromatogram obtained with the test solution corresponds in position and colour to the spot in the chromatogram obtained with the reference solution.

Water Carry out the method for determination of water (Appendix Ⅸ H, method 1), not more than 12.0 per cent.

Total ash Not more than 8.5 per cent (Appendix Ⅸ K).

Acid-insoluble ash Not more than 4.0 per cent (Appendix Ⅸ K).

Assay Carry out the method for high performance liquid chromatography (Appendix Ⅵ D).

Chromatographic system and system suitability Use octadecylsilane bonded silica gel as the stationary phase and a mixture of methanol and water (95 : 5) as the mobile phase. An evaporative light scattering detector is employed. The number of theoretical plates of the column is not less than 4000, calculated with the reference to the peak of sarsasapogenin.

Reference solution Weigh accurately a quantity of sarsasapogenin CRS, dissolve in methanol to produce a solution containing 0.3 mg per ml.

Test solution Weigh accurately 0.5 g of the powder (through No. 3 sieve) to a stopper conical flask, accurately add 25 ml of ethanol, weigh and macerate overnight. Ultrasonicate (power 200 W, frequency 30 kHz) for 40 minutes, cool and weigh again, replenish the loss of weight with ethanol and mix well. Evaporate accurately 10 ml of the successive filtrate to dryness, add 10 ml of water and 1 ml of hydrochloric acid, heat under reflux for 2 hours, cool, dropwise 40% solution of sodium hydroxide by shaking to the colour of the solution changed suddenly from orange-yellow to orange-red. Extract with two 30-ml quantities of chloroform, combine the extracts and evaporate to dryness. Dissolve the residue in methanol, transfer to a 10 ml volumetric flask, dilute to volume with methanol and mix well.

Procedure Accurately inject 5 μl and 10 μl of the reference solution and 5-10 μl of the test solution, respectively, into the column, and calculate the content with the two point method of external standard and logarithmically equation.
It contains not less than 1.0 per cent of sarsasapogenin ($C_{27}H_{44}O_3$), calculated with reference to the dried drug.

Processing *Rhizoma Anemarrhenae* Eliminate foreign matter, wash clean, soften thoroughly, cut into thick slices, dry and remove hairs and scraps.

Rhizoma Anemarrhenae (*processed with salt*) Stir-bake the slice of Rhizoma Anemarrhenae as described under the method for stir-baking with salt-water (Appendix Ⅱ D) until dry.
Carry out the method described under Assay above, it contains not less than 0.90 per cent of sarsasapogenin ($C_{27}H_{44}O_3$).

Action To remove *heat* and quench *fire*, and promote the production of body fluids and relieve *dryness* syndrome.

Indications Febrile diseases with high fever and dire thirst; *heat* in the lung with dry cough; consumptive fever; wasting-thirst due to internal *heat*; constipation.

Usage and dosage 6-12 g.

Storage Preserve in a ventilated and dry place, protected from moisture.

Rhizoma Anemones Raddeanae (两头尖, Liangtoujian)

Radde Anemone Rhizome

Radde Anemone Rhizome is the dried rhizome of *Anemone raddeana* Regel (Fam. Ranunculaceae). The drug is collected in summer, removed from rootlet, washed clean, and dried.

Description Long subfusiform, acute and pointed at two

ends, slightly curved and one end somewhat expanded, 1-3 cm long, 2-7 mm in diameter. Externally brown to brownish-black, with fine longitudinal wrinkles, the expanded portion usually possessing 1-3 rootlet scars appearing finned-protruding, occasionally with 3-5 indistinct annulations. Texture hard and fragile, easily broken, fracture slightly even, whitish or greyish-brown, nearly horny. Odour, slight; taste, weak and then slightly bitter and pungent.

Identification (1) Transverse section: Epidermis consisting of 1 layer of cells, tangentially elongated, outer walls thickened. Cortex of 10 or more layers of subrounded parenchymatous cells. Vascular bundles collateral, 10 or more ones arranged in a ring, phloem cells shrunken, xylem vessels 6-24, cambium indistinct. Rays broad, pith relatively large and composed of subrounded parenchymatous cells. Parenchymatous cells filled with starch granules.
Powder: Greyish-brown. Starch granules numerous, simple granules subrounded or elliptical, 2-11 μm in diameter, hilum pointed or shortly cleft-like, striations indistinct; compound granules of 2-4 components. Epidermal cells reddish-brown, yellow or bright yellow, the outer walls suberized and thickened, frequently protruding into the cells to be ridge-like or tubercular. Reticular, spiral or scalariform vesseles more frequent, 10-33 μm in diameter, some with bordered pitted vessels.
(2) Dissolve a quantity of raddeanin A CRS in methanol to produce a solution containing 1 mg per ml as the reference solution. Carry out the method for thin layer chromatography (Appendix Ⅵ B), using silica gel G as the coating substance and the lower layer of a mixture of chloroform, methanol and water (7 : 3 : 1) as the mobile phase. Apply separately to the plate 2 μl of each of the test solution obtained under Assay and the above reference solution. After developing and removal of the plate, dry in air. Spray with a 10% solution of sulfuric acid in ethanol, heat at 105℃ for 5 minutes. The spot in the chromatogram obtained with the test solution corresponds in position and colour to the spot obtained with the reference solution.

Water Carry out the method for determination of water (Appendix Ⅸ H, method 1), not more than 12.0 per cent.

Total ash Not more than 6.0 per cent (Appendix Ⅸ K).

Acid-insoluble ash Not more than 2.0 per cent (Appendix Ⅸ K).

Extractives Carry out the method for determination of ethanol-soluble extractives (Appendix Ⅹ A, the hot extraction method), using ethanol as the solvent, not less than 12.0 per cent.

Assay Carry out the method for high performance liquid chromatography (Appendix Ⅵ D).

Chromatographic system and system suitability Use octadecylsilane bonded silica gel as the stationary phase, acetonitrile as the mobile phase A and 0.1% phosphoric acid as the mobile phase B, elute in gradient as the following:

Time (min)	Mobile phase A (per cent V/V)	Mobile phase B (per cent V/V)
0-7	47	53
7-15	47→55	53→45

As detector a spectrophotometer set at 206 nm. The number of theoretical plates of the column is not less than 4000, calculated with the reference to the peak of raddeanin A.

Reference solution Weigh accurately a quantity of raddeanin A CRS, dissolve in methanol to produce a solution containing 1 mg per ml.

Test solution Weigh accurately 5 g of the powder (through No. 3 sieve) to a Soxhlet's extractor, add an appropriate quantity of methanol and heat under reflux for 3 hours. Evaporate the extracts to dryness, dissolve the residue in 10 ml of water, extract by shaking with two quantities of ether (20-ml and 10-ml orderly), and discard the ether solutions. Extract the water layer by shaking again with five quantities of *n*-butanol saturated with water (20-ml, 20-ml, 15-ml, 15-ml and 15-ml orderly), combine the extracts and recover the *n*-butanol in vacuum to dryness. Dissolve the residue in methanol, transfer to a 10 ml volumetric flask, dilute to volume with methanol and mix well.

Procedure Inject accurately 5 μl of each of the reference solution and the test solution, respectively, into the column, and calculate the content.
It contains not less than 0.20 per cent of raddeanin A ($C_{47}H_{76}O_{16}$), calculated with reference to the dried drug.

Action To relieve rheumatic conditions, and cure carbuncle.

Indications Rheumatoid arthritis with muscular contracture and joint pain; carbuncles with ulceration.

Usage and dosage 1.5-3 g; appropriate quantity for external use.

Storage Preserve in a cool and dry place.

Rhizoma Arisaematis (天南星, Tiannanxing)

Jackinthepulpit Tuber

Jackinthepulpit Tuber is the dried tuber of *Arisaema erubescens* (Wall.) Schott., *Arisaema heterophyllum* Bl. or *Arisaema amurense* Maxim. (Fam. Araceae). The drug is collected in autumn and winter when the stem and leaf are withered, removed from fibrous roots and outer tissue, and dried.

Description Oblate, 1-2 cm high, 1.5-6.5 cm in diameter. Externally whitish or brownish, relatively smooth, top with dented stem scars, encircled with numerous pitted fibrous root scars, some tubers surrounded by small oblate lateral buds. Texture hard and uneasily broken, fracuture uneven, white and starchy. Odour, acrid; taste, numb and pungent.

Identification Powder: Whitish. Starch granules mainly simple, spherical or oblong, 2-17 μm in diameter, hilum pointed, slit-shaped, large granules with faint striations; compound granules few, consisting of 2-12 components. Needle crystals of calcium oxalate scattered or in bundles embedded in mucilage cells, 63-131 μm long. Prisms of calcium oxalate mostly found in parenchymatous cells accompanied by vessels, 3-20 μm in diameter.

Processing *Rhizoma Arisaematis* Eliminate foreign matter, wash clean and dry.

Rhizoma Arisaematis (prepared) Take Rhizoma Arisaematis, graded according to size, soak in water separately, and change water 2 to 3 times a day. Add alumen after changing water if white foam is produced (to each 100 kg of Rhizoma Arisaematis add 2 kg of alumen). After soaking for a day, change water again and take out until only a slight tongue-numbing sensation tasted on the cut section. Boil the slices of Rhizoma Zingiberis and alumen in a pot with a quantity of water, then add Rhizoma Arisaematis and boil until no dry part at the centre of drug found. Take out and remove Rhizoma Zingberis, dry the drug in air to 40-60%

dryness, cut into thin slices, and dry thoroughly.
To each 100 kg of Rhizoma Arisaematis add 12.5 kg of Rhizoma Zingberis and 12.5 kg of alumen.

Action To remove *damp-phlegm*, dispel *wind* and arrest convulsion, and dissimate lumps and reduce swelling.

Indications Intractable phlegm with cough; vertigo; stroke with phlegm in the throat, deviation of the eye and mouth, and hemiplegia; epilepsy and convulsion; tetanus. External use for boils, sores, snake and insect bite.

Usage and dosage 3-9 g of the processed drug; for external use, appropriate quantity of the crude drug to be ground into powder and mixed with vinegar or liquor for topical application.

Precaution Used with caution in pregnancy.

Storage Preserve in a ventilated and dry place, protected from mould and moth.

Rhizoma Atractylodis (苍术, Cangzhu)

Atractylodes Rhizome

Atractylodes Rhizome is the dried rhizome of *Atractylodes lancea* (Thunb.) DC. or *Atractylodes chinensis* (DC.) Koidz. (Fam. Compositae). The drug is collected in spring and autumn, removed from soil, dried, and dashed to discard the fibrous roots.

Description *Rhizome of Atractylodes lancea* Irregularly moniliform or nodular-cylindrical, somewhat curved, occasionally branched, 3-10 cm long, 1-2 cm in diameter. Externally greyish-brown, wrinkled, transversly twisted-lined, with remains of rootles, and stem scars or remains of stems attached at apex. Texture compact, fracture yellowish-white or greyish-white, scattered with many orange-yellow or brownish-red oil cavities and crystallized out as white fine needle crystals after exposing for a long time. Odour, characteristic; taste, sweetish, pungent and bitter.

Rhizome of Atractylodes chinensis Knotty-lumpy or nodular-cylindrical, 4-9 cm long, 1-4 cm in diameter. Externally blackish-brown, yellowish-brown when peeled. Texture lax, fracture scattered with yellow oil cavities. Odour weakly aromatic; taste, pungent and bitter.

Identification (1) Powder: Brown. Needle crystals of calcium oxalate minute, 5-30 μm long, irregularly filled in parenchymatous cells. Fibres mostly in bundles, long fusiform, up to 40 μm in diameter, with rather thickened lignified walls. Stone cells fairly abundant, sometimes linking up with cork cells, polygonal, subrounded or subrectangular, 20-80 μm in diameter, with heavily thickened walls. Inulin frequently visible, with radial striations on surface.
(2) To 0.5 g of the powder add 2 ml of *n*-hexane, ultrasonicate for 15 minutes, filter, and use the filtrate as the test solution. Prepare a solution of 0.5g of Rhizoma Atractylodis reference drug in the same manner as the reference drug solution. Carry out the method for thin layer chromatography (Appendix VI B), using silica gel G as the coating substance and a mixture of petroleum ether (60-90℃) and ethyl acetate (20 : 1) as the mobile phase. Apply separately to the plate 2-6 μl of each of the above two freshly prepared solutions. After developing and removal of the plate, dry in air, and spray with 5% solution of *p*-dimethy laminobenzaldehyde in an ethanol solution containing 10% sulfuric acid, heat to the spots clear. The spots in the chromatogram obtained with the test solution correspond in position and colour to the spots in the chromatogram obtained with the reference drug solution, and a same muddy green principal spot (atractydin) is shown in both chromatograms.

Total ash Not more than 7.0 per cent (Appendix IX K).

Processing *Rhizoma Atractylodis* Eliminate foreign matter, wash clean, soften thoroughly, cut into thick slices, and dry.

Rhizoma Atractylodis (*stir-baked with bran*) Stir-bake the slices of Rhizoma Atractylodis as described under stir-baking with bran (Appendix II D) until its outer surface becomes dark yellow.
Subrounded or slat-shaped thick slices.

Action To remove *dampness* and invigorate the function of the spleen, dispel *wind-cold*, and improve eyesight.

Indications Epigastric distension and diarrhea; edema, particularly edema of the legs due to *wind-cold*; rheumatic arthralgia; common cold; night blindness.

Usage and dosage 3-9 g.

Storage Preserve in a cool and dry place.

Rhizoma Atractylodis Macrocephalae (白术, Baizhu)

Largehead Atractylodes Rhizome

Largehead Atractylodes Rhizome is the dried rhizome of *Atractylodes macrocephala* Koidz. (Fam. Compositae). The drug is collected in winter while the lower leaf of the plant turns yellow and the upper leaf becomes fragile, removed from soil, baked or sunned to dryness, and then removed from fibrous root.

Description Irregularly plump masses, 3-13 cm long, 1.5-7 cm in diameter. Externally greyish-yellow or greyish-brown, with warty protrudings, interrupted longitudinal wrinkles and grooves, and scars of fibrous rootlets; remains of stems and bud scars attached to the apex. Texture hard, uneasily broken, fracture uneven, yellowish-white to brownish, scattered with brownish-yellow dotted oil cavities. The baking-dried material horny and relatively dark coloured or cracked in section view. Odour, aromatic; taste, sweet and slightly pungent, viscous on chewing.

Identification (1) Powder: Yellowish-brown. Needle crystals of calcium oxalate minute, 10-32 μm long, aggregated in parenchymatous cells, a few needle crystals up to 4 μm in diameter. Fibres yellow, mostly in bundles, long fusiform, up to about 40 μm in diameter, walls fairly thickened, lignified, with distinct pit canals. Stone cells yellowish, subrounded, polygonal, rectangular, rarely fusiform, 37-64 μm in diameter. Parenchymatous cells containing inulin with radial striations. Vessel elements short, reticulated and bordered pitted, up to 48 μm in diameter.
(2) To 0.5 g of the powder add 2 ml of *n*-hexane, ultrasonicate for 15 minutes, filter, and use the filtrate as the test solution. Prepare a solution of 0.5g of Rhizoma Atractylodis Macrocephalae reference drug in the same manner as the reference drug solution. Carry out the method for thin layer chromatography (Appendix VI B), using silica gel G as the coating substances and a mixture of petroleum ether (60-90℃) and ethyl acetate (50 : 1) as the mobile phase. Apply separately to the plate 10 μl of each of the two solutions. After developing and removal of the plate, dry in air, and spray with 5% solution of vanillin in sulfuric acid,

heat to the spots clear. The spots in the chromatogram obtained with the test solution correspond in position and colour to the spots in the chromatogram obtained with the reference drug solution, and a same pink principal spot (atractylone) is shown in both chromatograms.

Total ash Not more than 5.0 per cent (Appendix Ⅸ K).

Acid-insoluble ash Not more than 1.0 per cent (Appendix Ⅸ K).

Degree of colouration Weigh accurately 2 g of the very coarse powder to a stoppered flask, add 50 ml of 55% ethanol, adjust to pH 2-3 with dilute hydrochloric acid, shake constantly for 1 hour and centrifuge at 4000 r/min for 15 minutes. Measure 10 ml of the supernatant and 10 ml of a reference solution (dilute a mixture of 5 ml of standard ferric chloride CS, 3 ml of standard cobaltous chloride CS and 0.6 ml of standard copper sulfate CS, to 10 ml with water) separately into two Nessler cylinder's, view vertically against a piece of white paper, the colour of the test solution should not be deeper than that of the reference solution.

Processing *Rhizoma Atractylodis Macrocephalae* Eliminate foreign matter, wash clean, soften thoroughly, cut into thick slices, and dry.

Rhizoma Atractylodis Macrocephalae (*processed with terra*) Stir-bake the slices of Rhizoma Atractylodis Macrocephalae with fine powders of Terra Flova Usta until the outer surface becomes ashen, and sift, using 20 kg of fine powder of Terra Flova Usta for 100 kg of the slices.

Rhizoma Atractylodis Macrocephalae (*processed with bran*) Cast the bran stir-baked with honey in a hot pot, add the slices of Rhizoma Atractylodis Macrocephalae while smoking, stir well until they become burnt yellow with burnt aroma, take out and sift the bran.
To each 100 kg of the slices of Rhizoma Atractylodis Macrocephalae add 10 kg of the bran stir-baked with honey.

Action To invigorate the function of the *spleen* and replenish *qi*, eliminate *dampness* by diuresis, arrest excessive perspiration, and prevent miscarriage.

Rhizoma Atractylodis Macrocephalae (*processed with terra*) To invigorate the function of the spleen and regulate the function of the spleen, and prevent miscarriage.

Indications Hypofunction of the spleen with loss of appitite, abdominal distension and diarrhea; dizziness and palpitation due to retention of phlegm and fluid; edema; spontaneous sweating; threatened abortion.

Rhizoma Atractylodis Macrocephalae (*processed with terra*) Hypofunction of the spleen with loss of appitite and diarrhea; threatened abortion.

Usage and dosage 6-12 g.

Storage Preserve in a cool and dry place, protected from moth.

Rhizoma Belamcandae (射干, Shegan)

Blackberrylily Rhizome

Blackberrylily Rhizome is the dried rhizome of *Belamcanda chinensis* (L.) DC. (Fam. Iridaceae). The drug is collected in early spring while the plant budding or in late autumn while the aerial part withering, removed from the fibrous roots and soil, and dried.

Description Irregularly nodular, 3-10 cm long, 1-2 cm in diameter. Externally yellowish-brown, dark brown or blackish-brown, shrunken, with abundantly annular striations. Several dish-shaped and sunken stem scars occurring at the upper part, stem bases remained occasionally; remains of thin roots and root scars occurring at the lower part. Texture hard, fracture yellow, granular. Odour, slight; taste, bitter and slightly pungent.

Identification (1) Transverse section: Epidermis sometimes remaining. Cork consisting of more layers of cells. Cortex sparsely scattered with leaf trace bundles; endodermis indistinct. Vascular bundles of stele amphivasal and collateral, densely arranged at the outer side. Parenchymatous cells containing prisms of calcium oxalate, starch granules and oil drops.
Powder: Orange. Prisms of calcium oxalate abundant, often broken, the intact ones 49-240(315) μm long, up to 49 μm in diameter. Simple starch granules subrounded or ellipsoidal, 2-17 μm in diameter, hilum dotted; compound granules very occasional, composed of 2-5 components. Parenchymatous cells subrounded or ellipsoidal, walls slightly thickened or beaded, with simple pits. Cork cells brown, anticlinal walls slightly sinuous, some containing brown contents.
(2) To 1 g of the powder add 10 ml of methanol, ultrasonicate for 30 minutes, filter, evaporate the filtrate to 1.5 ml as the test solution. Prepare a solution of 1 g of Rhizoma Belamcandae reference drug in the same manner as the reference drug solution. Carry out the method for thin layer chromatography (Appendix Ⅵ B), using polyamide film as the stationary phase and a mixture of chloroform, butanone and methanol (3 : 1 : 1) as the mobile phase. Apply separately 1 μl of each of the above two solutions to the film. After developing and removal of the membrane, dry in air, spray with aluminum chloride TS, and examine under ultraviolet light at 365 nm. The fluorescent spots in the chromatogram obtained with the test solution correspond in colour and position to the spots in the chromatogram obtained with the reference drug solution.

Water Carry out the method for determination of water (Appendix Ⅸ H, method 1), not more than 10.0 per cent.

Total ash Not more than 7.0 per cent (Appendix Ⅸ K).

Acid-insoluble ash Not more than 1.0 per cent (Appendix Ⅸ K).

Extractives Carry out the hot extraction method as described under the determination of ethanol-soluble extractives (Appendix Ⅹ A), using ethanol as solvant, not less than 18.0 per cent.

Assay Carry out the method for high performance liquid chromatography (Appendix Ⅵ D).

Chromatographic system and system suitability Use octadecylsilane bonded silica gel as the stationary phase and a mixture of methanol and 0.2% solution of phosphoric acid (53 : 47) as the mobile phase. As detector a spectrophotometer set at 266 nm. The number of theoretical plates of the column is not less than 8000, calculated with the reference to the peak of irisflorentin.

Reference solution Weigh accurately a quantity of irisflorentin CRS, dissolve in methanol to produce a solution containing 10 μg per ml.

Test solution Weigh accurately 0.1 g of the powder (through No. 4 sieve) to a stopper conical flask, accurately add 25 ml of methanol and weigh. Heat under reflux for 1 hour, cool and weigh again, replenish the loss of weight with methanol, mix well, filter and use the successive filtrate as the test solution.

Procedure Accurately inject 10 μl of the reference solution and 10-20 μl of the test solution, respectively, into the column, and calculate the content.
It contains not less than 0.10 per cent of the irisflorentin ($C_{20}H_{18}O_8$), calculated with reference to the dried drug.

Processing Eliminate foreign matter, wash clean, soften thoroughly, cut into thin slices, and dry.
In irregular or long slat shape, cut surface yellow or brownish-yellow.

Action To remove toxic *heat*, eliminate phlegm, and ease the sore throat.

Indications Sore throat, cough and dyspnea with expectoration of copious phlegm due to accumulation of toxic *heat*, phlegm and *fire*.

Usage and dosage 3-9 g.

Storage Preserve in a dry place.

Rhizoma Bistortae (拳参, Quanshen)

Bistort Rhizome

Bistort Rhizome is the dried rhizome of *Polygonum bistorta* L. (Fam. Polygonaceae). The drug is collected in early spring while the plant budding or in autumn just before withering, removed from soil, dried in the sun, and removed from the rootlet.

Description Compressed slat-shaped or compressed cylindrical, curved, or even curled, both ends slightly sharp or tapering towards one end, 6-13 cm long, 1-2.5 cm in diameter. Externally purplish-brown or purplish-black, rough, prominent on one side and slightly even or slightly channelled on the other side, with dense and rough annulations throughout, and showing remains of rootlets or root scars. Texture hard, fracture pale brownish-red or brownish-red, vascular bundles yellowish-white and dotted, arranged in a ring. Odour, slight; taste, bitter and astringent.

Identification (1) Powder: Pale brownish-red. Cork cells polygonal, containing brownish-red contents. Clusters of calcium oxalate fairly abundant, 15-65 μm in diameter. Bordered-pitted vessels 20-55 μm in diameter, reticulated and spiral vessels visible. Fibres long fusiform, 10-20 μm in diameter, walls relatively thickened, lignified, with distinct pit-canals. Starch granules ellipsoidal, ovoid or subspheroidal, 5-12 μm in diameter.
(2) To 0.5 g of the powder add 20 ml of methanol, ultrasonicate for 15 minutes and filter. Evaporate the filtrate to dryness and dissolve the residue in 5 ml of methanol as the test solution. Dissolve a quantity of gallic acid CRS in methanol to produce a solution containing 1 mg per ml as the reference solution. Carry out the method for thin layer chromatography (Appendix Ⅵ B), using silica gel G mixed with sodium carboxymethylcellulose as the coating substance and a mixture of chloroform, acetone and formic acid (7 : 2 : 1) as the mobile phase. Apply separately to the plate 5 ml of the above two solutions. After developing and removal of the plate, dry in air, and expose to ammonia vapour to the spots clear. The spot in the chromatogram obtained with the test solution corresponds in position and colour to the spot in the chromatogram obtained with the reference solution.

Water Carry out the method for determination of water (Appendix Ⅸ H, method 1), not more than 15.0 per cent.

Total ash Not more than 9.0 per cent (Appendix Ⅸ K).

Acid-insoluble ash Not more than 1.0 per cent (Appendix Ⅸ K).

Extractives Carry out the method for determination of ethanol-soluble extractives (Appendix Ⅹ A, the cold maceration method), using ethanol as the solvent, not less than 15.0 per cent.

Processing Eliminate foreign matter, wash clean, soak slightly, soften thoroughly, cut into thin slices and dry.

Action To remove toxic *heat*, reduce swelling, and arrest bleeding.

Indications Dysentery with bloody stools, diarrhea in acute gastroenteritis, acute respiratory tract infection with cough; carbuncles, scrofula, ulcers in the mouth and on the tougue; spitting of blood, epistaxis, hemorrhoidal bleeding, venomous snake bite.

Usage and dosage 4.5-9 g; appropriate quantity for external use.

Storage Preserve in a dry place.

Rhizoma Bletillae (白及, Baiji)

Common Bletilla Tuber

Common Bletilla Tuber is the dried tuber of *Bletilla striata* (Thunb.) Reichb. f. (Fam. Orchidaceae). The drug is collected in summer and autumn, removed from fibrous roots, washed, boiled or steamed until no dry core visible, dried to half dryness in the sun, peeled to remove the outer tissue, and then dried in the sun.

Description Irregularly oblate, mostly with 2-3 claw-like branches, 1.5-5 cm long, 0.5-1.5 cm thick. Externally greyish-white or yellowish-white, possessing several concentric rings and brown dotted rootlet scars, with raised stem scars at the upper part and a trace jointing to another tuber at the lower part. Texture hard and uneasily broken, fracture whitish and horny. Odour, slight; taste, bitter and viscous on chewing.

Identification (1) Powder: Yellowish-white. The anticlinal walls of epidermal cells sinuous, slightly thickened, lignified, with distinct pit canals. Raphides of calcium oxalate occurring in large subrounded mucilage cells or scattered throughout the powder, needle crystals 18-88 μm long. Fibres in bundles, 11-30 μm in diameter, walls lignified, with V-shaped or elliptical pits. Vessels scalariform, bordered pitted and spiral, 10-32 μm in diameter. Masses of gelatinzed starch granules colourless.
(2) To 4 g of the powder add 20 ml of methanol, ultrasonicate for 30 minutes and filter. Evaporate the filtrate to dryness, dissolve the residue in 20 ml of water, add 2 ml of hydrochloric acid, heat under reflux for 30 minutes, and cool immediately. Extract by shaking with two 40-ml quantities of ether, combine the ether extracts, evaporate to dryness, and dissolve the residue in 1 ml of chloroform as the test solution. Prepare a solution of 2 g of Rhizoma Bletillae reference drug in the same manner as the reference drug solution. Carry out the method for thin layer chromatography (Appendix Ⅵ B), using silica gel G mixed with sodium carboxymethylcellulose as the coating substance and the upper layer of a mixture of petroleum ether (30-60℃), ethyl formate and formic acid (15 : 5 : 1) as the mobile phase. Apply separately to the plate 5 μl of the test

solution and 10 μl of the reference drug solution. After developing and removal of the plate, dry in air, and examine under ultraviolet light at 365 nm. The fluorescent spots in the chromatogram obtained with the test solution correspond in position and colour to the spots in the chromatogram obtained with the reference drug solution.

Water Carry out the method for determination of water (Appendix Ⅸ H, method 1), not more than 15.0 per cent.

Total ash Not more than 5.0 per cent (Appendix Ⅸ K).

Acid-insoluble ash Not more than 1.5 per cent (Appendix Ⅸ K).

Processing Wash clean, soften thoroughly, cut into thin slices, and dried in the sun.

Action To arrest bleeding, reduce swelling and the promote growth of new tissue.

Indications Hemoptysis in pulmonary tuberculosis, hematemesis in peptic ulcer, boils and sores; chapped skin.

Usage and dosage 6-15 g, or 3-6 g to be ground into powder for oral administration; appropriate quantity for external use.

Precaution Incompatible with Radix Aconiti and allied drugs.

Storage Preserve in a ventilated and dry place.

Rhizoma Bolbostematis (土贝母, Tubeimu)

Paniculate Bolbostemma

Paniculate Bolbostemma is the dried tuber of *Bolbostemma paniculatum* (Maxim.) Franquet (Fam. Cucurbitaceae). The drug is collected in autumn, washed clean, broken off, boiled until no white core visible, taken out, and dried in the sun.

Description Irregular masses varying in size. Externally pale reddish-brown or dark brown, bumpy. Texture hard, uneasily broken, fracture horny, bright and smooth. Odour, slight; taste, slightly bitter.

Identification To 0.1 g of the powder add 20 ml of 70% ethanol, ultrasonicate for 20 minutes, filter, evaporate the filtrate to dryness, dissolve the residue in 1 ml of methanol as the test solution. Dissolve tubeimoside A CRS in methanol to produce a solution containing 1 mg per ml as the reference solution. Carry out the method for thin layer chromatography (Appendix Ⅵ B), using silica gel G mixed with sodium carboxymethylcellulose as the coating substance and a mixture of chloroform, ethyl acetate, methanol, formic acid and water (12 : 3 : 8 : 2 : 2) as the mobile phase. Apply separately to the plate 5 μl each of the two solutions. After developing and removal of the plate, dry in air, spray with a mixture of acetic anhydride, sulfuric acid and ethanol (1 : 1 : 10), heat at 110℃ to the spots clear. The spot in the chromatogram obtained with the test solution corresponds in position and colour to the spot in the chromatogram obtained with the reference solution.

Assay Carry out the method for high performance liquid chromatography (Appendix Ⅵ D).

Chromatographic system and system suitability Use octadecylsilane bonded silica gel as the stationary phase and 65% methanol as the mobile phase. As detector a spectrophotometer set at 214 nm. The number of the theoretical plates of the column is not less than 1500, calculated with reference to the peak of tubeimoside A.

Reference solution Place 10 mg of tubeimoside A CRS, previously dried in vacuum to constant weight at 105℃, weighed accurately, to a 100 ml volumetric flask, dissolve in the mobile phase, dilute to volume and mix well.

Test solution Weigh accurately 0.3 g of the powder (through No. 4 sieve) to a stopper conical flask, add accurately 50 ml of 70% ethanol and weigh, ultrasonicate for 30 minutes, weigh again, replenish the loss of the weight with 70% ethanol and mix well. Filter, evaporate exactly 25 ml of the successive filtrate on a water bath to no ethanolic smell, add 10 ml of water, transfer into a separating funnel, extract with successive quantities of 20 ml, 20 ml, 10 ml and 10 ml of *n*-butanol saturated with water. Combine the *n*-butanol solutions, evaporate to dryness, dissolve the residue in methanol and transfer to a 5 ml volumetric flask, dilute with methanol to volume and mix well.

Procedures Accurately inject 10 μl of each of the reference solution and test solution, respectively, into the column, determine and calculate the content.

It contains not less than 1.0 per cent of tubeimoside A ($C_{63}H_{98}O_{29}$), calculated with reference to the dried drug.

Action To dissipate lumps, reduce swelling, and counteract *toxicity*.

Indications Mastitis, chronic lymphadenitis, tuberculosis of cervical lymph nodes, hypertrophic rhinitis.

Usage and dosage 4.5-9 g.

Storage Preserve in a ventilated and dry place.

Rhizoma Chuanxiong (川芎, Chuanxiong)

Szechwan Lovage Rhizome

Szechwan Lovage Rhizome is the dried rhizome of *Ligusticum chuanxiong* Hort. (Fam. Umbelliferae). The drug is collected in summer when the node of stem becomes obviously swollen and purplish, removed from soil, baked gently to dryness after sun-drying, and removed from rootlets.

Description Irregular knotty and fist-like, 2-7 cm in diameter. Externally yellowish-brown, rough and shrunken, with many parallel and raised annulations, showing dent and subrounded stem scars on the top and numerous tuberculous rootlet scars on the lower part and at the nodes. Texture compact, uneasily broken, fracture yellowish-white or greyish-yellow, scattered with yellowish-brown oil dots. Cambium in an undulate ring. Odour, strongly aromatic; taste, bitter, pungent and slight numb, and with a sweet aftertaste.

Identification (1) Transverse section: Cork consisting of over 10 layers of cells. Cortex narrow, scattered with root-trace vascular bundles, and cambium distinct. Phloem broad. Cambium undulate or irregularly polygonal. Vessels in xylem polygonal or subrounded, mostly uniseriate or arranged in V-shape. Wood fibre bundles occasionally visible. Pith relatively large. Parenchyma scattered with numerous oil cavities, subrounded, elliptical or irregular, pale yellowish-brown, small near the cambium and gradually enlarged outwards; parenchymatous cells containing abundant starch granules, some cells with subrounded or clustered crystals of calcium oxalate.

Powder: Pale yellowish-brown or greyish-brown. Starch

granules abundant, single granules ellipsoidal oblong, subspheroidal, ovoid or reniform, 5-16 μm in diameter, about 21 μm long, hilum pointed, slit-shaped or V-shaped; compound granules occasionally visible, consisting of 2-4 components. Crystals of calcium oxalate occuring in parenchymatous cells, subrounded or clustered, 10-25 μm in diameter. Cork cells dark yellowish-brown, polygonal in surface view, walls slightly sinuated. Oil cavities mostly broken, fragments occasionally visible, secretory cells thin-walled, containing many oil drops. Vessels mainly spiral, and reticulated, or scalariform, 14-50 μm in diameter.

(2) Macerate 1 g of the powder in 5 ml of petroleum ether (30-60℃), shake frequently and allow to stand for 10 hours. Evaporate 1 ml of the supernatant to dryness and dissolve the residue in 1 ml of methanol. Add 2-3 drops of 2% solution of 3,5-dinitrobenzoic acid in methanol and 2 drops of saturated solution of potassium hydroxide in methanol; a purplish-red colour is produced.

(3) To 1 g of the powder add 20 ml of ether, heat under reflux for 1 hour, filter, and evaporate the filtrate to dryness. Dissolve the residue in 2 ml of ethyl acetate as the test solution. Prepare a solution of 1 g of Rhizoma Chuanxiong reference drug in the same manner as the reference drug solution. Carry out the method for thin layer chromatography (Appendix Ⅵ B), using silica gel G as the coating substance and a mixture of *n*-hexane and ethyl acetate (9 : 1) as the mobile phase. Apply separately to the plate 1-2 μl each of the two solutions. After developing and removal of the plate, dry in air, and examine under ultraviolet light at 365 nm. The fluorescent spots in the chromatogram obtained with the test solution corresponds in position and colour to the spots in the chromatogram obtained with the reference drug solution.

Total ash Not more than 6.0 per cent (Appendix Ⅸ K).

Acid-insoluble ash Not more than 2.0 per cnet (Appendix Ⅸ K).

Extractives Carry out the method for determination of ethanol-soluble extractives (Appendix Ⅹ A, the hot extraction method), using ethanol as solvent, not less than 12.0 per cent.

Processing Eliminate foreign matter, grade by size, soak briefly, wash clean, soften thoroughly, cut into thin slices, and dry.

Action To promote the flow of blood and *qi*, dispel *wind* and relieve pain.

Indications Menstrual disorders, amenorrhea, dysmenorrhea; abdominal pain with mass formation; pricking pain in the chest and costal regions; swelling and pain due to traumatic injuries; headache; rheumatic arthralgia.

Usage and dosage 3-9 g.

Storage Preserve in a cool and dry place, protected from moth.

Rhizoma Cibotii (狗脊, Gouji)

Cibot Rhizome

Cibot Rhizome is the dried rhizome of *Cibotium barometz* (L.) J. Sm. (Fam. Dicksoniaceae). The drug is collected in autumn or in winter, removed from soil and dried; or removed from hard root, petiole and hairs, thickly sliced, and dried, called "Shenggoujipian"; or after steaming the drug is partially dried in the sun, cut into thick slices and dried thoroughly, called "Shugoujipian".

Description Irregularly long lump-shaped, 10-30 cm long, 2-10 cm in diameter. Externally dark brown, with remains of golden hairs; upper part exhibiting several reddish-brown woody petioles and the lower part showing remains of black fibrous roots. Texture hard, uneasily broken. Odourless; taste, weak and slight astringent.

Shenggoujipian Irregularly long slat-shaped or rounded, 5-20 cm long, 2-10 cm in diameter, 1.5-5 mm thick, transverse cut surface pale brown, relatively smooth, exhibiting a brownish-yellow raised ring or stripe of xylem at a distance of 1-4 mm from edges. Edges irregular, with remains of golden hairs occasionally; texture fragile, easily broken, starchy.

Shugoujipian Blackish-brown, texture hard.

Identification (1) Transverse section: Epidermis consisting of one layer of cells, with remains of golden non-glandular hairs. The inner of epidermis exhibiting 10 or over rows of brownish yellow sclerenchymatous cells, pits distinct. Xylem arranged in a ring, composed of tracheids, both the inner and outer parts exhibiting phloem and endodermis. Cortex and pith composed of parenchymatous cells, filling with starch granules, some with yellowish brown contents.

(2) To 2 g of the powder add 40 ml of methanol, heat under reflux for 1 hour, cool and filter. Evaporate the filtrate to dryness and dissolve the residue in 1 ml of methanol as the test solution. Dissolve protocatechuic aldehyde CRS and protocatechuic acid CRS in methanol to produce a mixture containing 1 mg of each per ml as the reference solution. Carry out the method for thin layer chromatography (Appendix Ⅵ B), using silica gel G as the coating substance and a mixture of chloroform, ethyl acetate, toluene and formic acid (5 : 6 : 3 : 1) as the mobile phase. Apply separately to the plate 5-10 μl of the test solution and 2 μl of the reference solution. After developing and removal of the plate, dry in air. Spray with a 5% solution of ferric chloride in ethanol, heat at 105℃ to the spots clear. The spots in the chromatogram obtained with the test solution correspond in position and colour to the spots in the chromatogram obtained with the reference solution.

Water Carry out the method for determination of water (Appendix Ⅸ H, method 1), not more than 13.0 per cent.

Total ash Not more than 3.0 per cent (Appendix Ⅸ K).

Acid-insoluble ash Not more than 1.0 per cent (Appendix Ⅸ K).

Extractives Carry out the method for determination of ethanol-soluble extractives (Appendix Ⅹ A, the hot extraction method), using dilue ethanol as the solvent, not less than 20.0 per cent.

Processing *Rhizoma Cibotii* Eliminate foreign matter; for the drug not sliced, wash clean, soften thoroughly, cut into thick slices, and dry.

Rhizoma Cibotii (*scalded*) Scald the slices of Rhizoma Cibotii with sand as described under the method for scalding (Appendix Ⅱ D) until inflated, and after cooling remove the remainder of hairs.

Action To reinforce the liver and the kidney, to strengthen the back, and to relieve rheumatic conditions.

Indications Weakness and aching of the lower back and knees, weakness of legs, rheumatic arthralgia.

Usage and dosage 6-12 g.

Storage Preserve in a ventilated and dry place, protected from

moisture.

Rhizoma Cimicifugae
(升麻, Shengma)

Largetrifoliolious Bugbane Rhizome

Largetrifoliolious Bugbane Rhizome is the dried rhizome of *Cimicifuga heracleifolia* Kom., *Cimicifuga dahurica* (Turcz.) Maxim. or *Cimicifuga foetida* L. (Fam. Ranunculaceae). The drug is collected in autumn, removed from soil and fibrous root, and then dried in the sun.

Description Irregular long pieces, frequently branched, nodular, 10-20 cm long, 2-4 cm in diameter. Externally blackish-brown or brown, rough, with remains of many wiry fibrous roots, the upper part showing several round and hollow remains of stems, the inner walls of the hole with reticulate furrows, and the lower part lumpy, with fibrous root scars. Texture light and hard, uneasily broken, fracture uneven, cracked, fibrous, yellowish-green or yellowish-white. Odour, slight; taste, slightly bitter and astringent.

Identification To 1 g of the powder add 50 ml of ethanol, heat under reflux for 1 hour and filter. Evaporate the filtrate to dryness, dissolve the residue in 1 ml of ethanol as the test solution. Dissolve ferulic acid CRS and isoferulic acid CRS in ethanol, respectively, to produce two solutions each containing 1 mg per ml respectively as the reference solutions. Carry out the method for thin layer chromatography (Appendix Ⅵ B), using silica gel G as the coating substance and a mixture of benzene, chloroform and glacial acetic acid (6 : 1 : 0.5) as the mobile phase. Apply separately to the plate 10 μl of each of the above three solutions. After developing and removal of the plate, dry in air, and examine under ultraviolet light at 365 nm. The fluorescent spots in the chromatogram obtained with the test solution correspond in position and colour to the spots obtained with the reference solutions.

Foreign matter Not more than 5.0 per cent (Appendix Ⅸ A).

Water Carry out the method for determination of water (Appendix Ⅸ H, method 1), not more than 13.0 per cent.

Total ash Not more than 8.0 per cent (Appendix Ⅸ K).

Acid-insoluble ash Not more than 4.0 per cent (Appendix Ⅸ K)

Extractives Carry out the method for determination of ethanol-soluble extractives (Appendix Ⅹ A, the hot extraction method), using dilute ethanol as the solvent, not less than 17.0 per cent.

Assay Carry out the method for high performance liquid chromatography (Appendix Ⅵ D).

Chromatographic system and system suitability Use octadecylsilane bonded silica gel as the stationary phase and a mixture of acetonitrile and 0.1% solution of phosphoric acid (13 : 87) as the mobile phase. As detector a spectrophotometer set at 316 nm. The number of theoretical plates of the column is not less than 5000, calculated with the reference to the peak of isoferulic acid.

Reference solution Weigh accurately 10 mg of isoferulic acid CRS in a 50 ml brown volumetric flask, add 10% ethanol and dilute to volume, mix well. Transfer accurately 1 ml to a 10 ml brown volumetric flask and dilute to volume with 10% ethanol to produce a solution containing 20 μg per ml.

Test solution Weigh accurately 0.5 g of the powder (through No. 2 sieve), in a stopper conical flask, add accurately 25 ml of 10% ethanol, and weigh. Heat under reflux for 2.5 hours, cool and weigh again. Replenish the loss of weight with 10% ethanol, mix well, filter through a millipore film (0.45 μm) and use the successive filtrate as the test solution.

Procedure Inject accurately 10 μl of each of the reference solution and the test solution, respectively, into the column, and calculate the content.

It contains not less than 0.10 per cent of isoferulic acid ($C_{10}H_{10}O_4$), calculated with reference to the dried drug.

Processing Eliminate foreign matter, soak briefly, wash clean, soften thoroughly, cut into thick slices, and dry.

Action To induce perspiration and promote eruptions, to remove toxic *heat*, and elevate *yang*.

Indications Headache caused by *wind-heat*, toothache, ulcers in the mouth, sore throat; measles with inadequate eruptions and other eruptive febrile diseases; prolapse of the rectum or the uterus.

Usage and dosage 3-9 g.

Storage preserve in a ventilated and dry place.

Rhizoma Coptidis
(黄连, Huanglian)

Golden Thread

Golden Thread is the dried rhizome of *Coptis chinensis* Franch., *Coptis deltoidea* C. Y. Cheng et Hsiao or *Coptis teeta* Wall. (Fam. Ranunculaceae), commonly known as "Wei-lian", "Ya-lian" or "Yun-lian", respectively. The drug is collected in autumn, removed from rootlets and soil, and dried.

Description *Rhizome of Coptis chinensis* Mostly gathered to a cluster, curved, like "chicken's feet", single rhizome 3-6 cm long, 0.3-0.8 cm in diameter. Externally greyish-yellow or yellowish-brown, rough, bearing irregular nodular protrudings, rootlets and remains of rootlets, some internodes smooth as stem, commonly known as "Guoqiao" (bridge piece). The upper part mostly remained with brown scale leaves, apex often bearing remains of stems or petioles. Texture hard, fracture uneven, bark orange-red or dark brown, wood brightly yellow or orange-yellow, radially arranged, pith sometimes hollowed. Odour, slight; taste, very bitter.

Rhizome of Coptis deltoidea Mostly single, somewhat cylindrical, slightly curved, 4-8 cm long, 0.5-1 cm in diameter. "Guoqiao" smooth and relatively long. Apex with some remains of stems.

Rhizome of Coptis teeta Curved hook-like, mostly single, relatively small.

Identification (1) Transverse section:

Rhizome of Coptis chinensis Cork cells of several layers. Cortex broader, stone cells singly scattered or grouped. Pericycle fibres in bundles or accompanied with a few stone cells, both yellow. Collateral vascular bundles arranged in a ring. Xylem yellow, lignified, xylem fibres well developed. Pith consisting of parenchymatous cells, stone cells absent.

Rhizome of Coptis deltoidea Pith with stone cells.

Rhizome of Coptis teeta Stone cells absent from cortex, pericycle and pith.

(2) To 1 g of the coarse powder add 10 ml of ethanol, heat to boil, allow to cool, and filter. To 5 drops of the filtrate, add 1 ml of diluted hydrochloric acid TS and a samll quantity of chlorinated lime, a red colour is produced; to another 5 drops of the filtrate add 2-3 drops of 5% solution of gallic acid in ethanol, evaporate to dryness, add several drops of sulfuric acid to the residue while hot; a dark green colour is produced.

(3) To 50 mg of the powder add 5 ml of methanol, heat under reflux on a water bath for 15 minutes, filter, add methanol to 5 ml as the test solution. Prepare a solution of Rhizoma Coptidis reference drug in the same manner as the reference drug solution. Dissolve berberine hydrochloride CRS in methanol to produce a solution containing 0.5 mg per ml as the reference solution. Carry out the method for thin layer chromatography (Appendix Ⅵ B), using silica gel G as the coating substance and a mixture of benzene, ethyl acetate, isopropanol, methanol and water (6 : 3 : 1.5 : 1.5 : 0.3) as the mobile phase. Apply separately to the plate 1 μl of each of the three solutions. After developing in a chamber pre-equilibrated with the vapour of concentrated ammonia TS and removal of the plate, dry in air and examine under ultraviolet light at 365 nm. The yellow fluorescent spots in the chromatogram obtained with the test solution corresponds in position and colour to the spots in the chromatogram obtained with the reference drug solution; and a yellow fluorescent spot corresponds to the spot in the chromatogram obtained with the reference solution.

Total ash Not more than 5.0 per cent (Appendix Ⅸ K).

Assay Weigh accurately 0.1 g of the powder to a 100 ml of volumetric flask, add 95 ml of a mixture of hydrochloric acid and methanol (1 : 100), heat on a water bath at 60℃ for 15 minutes, ultrasonicate for 30 minutes, allow to stand overnight, dilute with methanol to volume, mix well, filter, and use the filtrate as the test solution. Dissolve berberine hydrochloride CRS, weighed accurately, in methanol to produce a solution containing 0.04 mg per ml as the reference solution. Carry out the method for thin layer chromatography (Appendix Ⅵ B), using silica gel G as the coating substance and a mixture of benzene, ethyl acetate, isopropanol, methanol and water (6 : 3 : 1.5 : 1.5 : 0.3) as the mobile phase. Apply 1 μl of the test solution and 1 μl, 3 μl of the reference solution alternatively to the plate. After developing 8 cm in a chamber pre-equilibrated with the vapour of concentrated ammonia TS for 15 minutes and removal of the plate, dry in air. Carry out the method for thin layer chromatography (thin layer chromatographic scanning method, Appendix Ⅵ B), scan with fluorescence mode at the wavelength of $\lambda_{ex} = 366$ nm, determine the integration value of the fluorescent strength, and calculate the content. It contains not less than 3.6 per cent of berberine, calculated as berberine hydrochloride ($C_{20}H_{18}NO_4 \cdot HCl$).

Processing *Rhizoma Coptidis* Eliminate foreign matter, soften thoroughly, cut into thin slices, dry in air, or break to pieces before use.

Rhizoma Coptidis (*processed with wine*) Stir-bake the Rhizoma Coptidis as described under the method for stir-baking with wine (Appendix Ⅱ D) to dryness, using 12.5 kg of yellow rice wine per 100 kg of Rhizoma Coptidis.

Rhizoma Coptidis (*processed with ginger*) Stir-bake the Rhizoma Coptidis as described under the method for stir-baking with ginger juice (Appendix Ⅱ D) to dryness, using 12.5 kg of ginger per 100 kg of Rhizoma Coptidis.

Rhizoma Coptidis (*Processed with Fructus Evodiae*) Decoct Fructus Evodiae with a quantity of water, mix the decoction with Rhizoma Coptidis, until the decoction is exhausted, then stir-bake to dryness.

To each 100 kg of Rhizoma Coptidis add 10 kg of Fructus Evoidae.

Carry out the method for determination of total ash as described above, for all the processed products, not more than 4.0 per cent.

Action To remove *damp-heat*, quench *fire* and counteract *toxicity*.

Rhizoma Coptidis (*processed with wine*) To remove *fire* from the upper part of the body.

Rhizoma Coptidis (*processed with ginger*) To remove *fire* from the stomach, regulate the stomach function and relieve vomiting.

Rhizoma Coptidis (*processed with Fructus Evodiae*) To soothe the liver, regulate the stomach function and relieve vomiting.

Indications Attack by *damp-heat* manifested by stuffiness and fullness in the abdomen, vomiting and acid regurgitation, dysentery jaundice; high fever accompanied by impairmed consciousness; fidget and insomnia due to *fire*; spitting of blood and epistaxis caused by *heat* in the blood; bloodshot eyes; toothache; wastinf-thirst carbuncles and sores; external use for eczema and other skin diseases with exudation; pus from the ears.

Rhizoma Coptidis (*processed with wine*) Bloodshot eyes; ulcers in the mouth.

Rhizoma Coptidis (*processed with ginger*) Stuffiness and fullness in the abdomen with nausea and vomiting caused by *damp-heat* in combination with cold.

Rhizoma Coptidis (*processed with Fructus Evodiae*) Nausea, vomiting and acid regurgitation in disharmony of the liver and the stomach.

Usage and dosage 2-5 g; appropriate quantity for external use.

Storage Preserve in a ventilated and dry place.

Rhizoma Corydalis (延胡索, Yanhusuo)

Yanhusuo

Yanhusuo is the dried tuber of *Corydalis yanhusuo* W. T. Wang (Fam. Papaveraceae). The drug is collected in early summer when the plant is withered, removed from fibrous root, washed clean, boiled in water until no dry core visible, and dried in the sun.

Description Irregularly oblate, 0.5-1.5 cm in diameter. Externally yellow or yellowish-brown, irregularly reticulate-wrinkled. Apex with slight dented stem scar, base usually tuberculate. Texture hard and fragile, fracture yellow, horny, waxy-sheeny. Odour, slight; taste, bitter.

Identification (1) Powder: Greenish-yellow. Masses of glatinised tarch granules pale yellow or nearly colourless. Sclerenchyma in hypodermis greenish-yellow, cells polygonal, subsquare or elongated, walls slightly sinuous, lignified, some beaded, finely pitted. Sprial vessels 16-32 μm in diameter.

(2) To 1 g of the powder add 50 ml of methanol, ultrasonicate for 30 minutes and filter. Evaporate the filtrate to dryness, dissolve the residue in 10 ml of water and adjust the solution to alkaline with strong ammonia TS. Extract with three 10-ml quantities of ether, combine the ether

extracts and evaporate to dryness. Dissolve the residue in 1 ml of methanol as the test solution. Prepare a solution of 1 g of Rhizoma Corydalis reference drug in the same manner as the reference drug solution. Dissolve a quantity of tetrahydropalmatine CRS in methanol to produce a solution containing 0.5 mg per ml as the reference solution. Carry out the method for thin layer chromatography (Appendix Ⅵ B), using silica gel G mixed with a 1% solution of sodium hydroxide as the coating substance and a mixture of toluene and acetone (9 : 2) as the mobile phase. Apply separately to the plate 2-3 μl of the above three solutions. After developing and removal of the plate, dry in air and expose to iodine vapour for 3 minutes. After expelling the iodine absorbed, examine under ultraviolet light at 365 nm. The fluorescent spots in the chromatogram obtained with the test solution correspond in position and colour to the spots in the chromatogram obtained with the reference drug solution and the reference solution.

Water Carry out the method for determination of water (Appendix Ⅸ H, method 1), not more than 15.0 per cent.

Total ash Not more than 4.0 per cent (Appendix Ⅸ K).

Acid-insoluble ash Not more than 1.5 per cent (Appendix Ⅸ K).

Extractives Carry out the method for determination of ethanol-soluble extractives (Appendix Ⅹ A, hot extraction method), using dilute ethanol as the solvent, not less than 13.0 per cent.

Assay Carry out the method for high performance liquid chromatography (Appendix Ⅵ D).

Chromatographic system and system suitability Use octadecylsilane bonded silica gel as the stationary phase and a mixture of methanol and 0.1% solution of phosphoric acid (adjust to pH 6.0 with triethylamine) (55 : 45) as the mobile phase. As detector a spectrophotometer set at 280 nm. The number of theoretical plates of the column is not less than 3000, calculated with the reference to the peak of tetrahydropalmatine.

Reference solution Weigh accurately a quantity of tetrahydropalmatine CRS, dissolve in methanol to produce a solution containing 46 μg per ml.

Test solution Weigh accurately 0.5 g of the powder (through No. 3 sieve) to a flat bottom flask, accurately add 50 ml of a mixture of strong ammonia TS and methanol (1 : 20), weigh, macerate for 1 hour and then heat under reflux for 1 hour, cool and weigh again, replenish the loss of solvent with the above mixture, mix well and filter. Evaporate accurately 25 ml of the successive filtrate to dryness, dissolve the residue in methanol, transfer to a 5 ml volumetric flask, dilute with methanol to volume and mix well.

Procedure Accurately inject 10 μl of each of the reference solution and the test solution, respectively, into the column, and calculate the content.

It contains not less than 0.050 per cent of tetrahydropalmatine ($C_{21}H_{25}NO_4$), calculated with reference to the dried drug.

Processing *Rhizoma Corydalis* Eliminate foreign matter, wash clean, dry, and cut into thick slices or break to pieces before use.

Rhizoma Corydalis (processed with vinegar) Stir-bake Rhizoma Corydalis as described under the method for stir-baking with vinegar (Appendix Ⅱ D) to dryness, or boil it as described under the method for boiling with vinegar (Appendix Ⅱ D) until the vinegar is exhausted, and cut into thick slices or break to pieces before use.

Action To promote circulation of blood and *qi* and relieve pain.

Indications Chest pain, epigastric pain; amenorrhea, dysmenorrhea, blood stasis after childbirth; traumatic swelling and pain.

Usage and dosage 3-9 g; or 1.5-3 g of powder to be swallowed at a time.

Storage Preserve in a dry place, protected from moth.

Rhizoma Corydalis Decumbentis (夏天无, Xiatianwu)

Decumbent Corydalis Rhizome

Decumbent Corydalis Rhizome is the dried tuber of *Corydalis decumbens* (Thunb.) Pers. (Fam. Papaveraceae). The drug is collected in spring and early summer after budding, removed from stem, leave and rootlets, washed clean, and dried.

Description Subspheroidal, long-rounded or irregular, 0.5-3 cm long, 0.5-2.5 cm in diameter. Externally greyish-yellow, dark green or dark brown, with numerous tubercles and indistinct fine wrinkles. Apex obtuse and rounded, showing scars of stems, surrounded by numerous pale yellow dotted leaf scars and rootlet scars. Texture hard, fracture yellowish-white or yellow, granular or horny, some individuals slightly starchy. Odour, slight; taste, bitter.

Identification (1) Macerate 4 g of the coarse powder in 25 ml of 1% solution of sodium carbonate on a nearly boiling water bath for 5 minutes, and filter. Adjust the filtrate to pH 6 with dilute hydrochloric acid TS, and extract by shaking with 15 ml of chloroform. To 2 ml of the chloroform solution add 1 ml of sulfuric acid and shake. The sulfuric acid layer shows a brownish-red colour and turns brownish-black on standing.

(2) Ultrasonicate about 4 g of the powder with 40 ml of a mixture of chloroform, methanol and strong ammonia TS (5 : 1 : 0.1) for 30 minutes, filter, and evaporate the filtrate to dryness. Dissolve the residue in 2 ml of methanol as the test solution. Dissolve protopine CRS in chloroform to produce a solution containing 2 mg per ml as the reference solution. Carry out the method for thin layer chromatography (Appendix Ⅵ B), using silica gel G mixed with sodium carboxymethylcellulose as the coating substance and a mixture of cyclohexane, ethyl acetate and diethylamine (16 : 3 : 1) as the mobile phase. Apply separately to the plate 5 μl each of the two solutions. After developing in a chamber pre-equilibrated with the mobile phase for 15 minutes, and removal of the plate, dry in air, spray with dilute potassium iodobismuthate TS. The spot in the chromatogram obtained with the test solution corresponds in position and colour to the spot in the chromatogram obtained with the reference solution.

Water Carry out the method for determination of water (Appendix Ⅸ H, method 1), not more than 15.0 per cent.

Total ash Not more than 5.0 per cent (Appendix Ⅸ K).

Acid-insoluble ash Not more than 1.5 per cent (Appendix Ⅸ K)

Extractives Carry out the method for determination of water-soluble extractives (Appendix Ⅹ A, the hot extraction method), not less than 30.0 per cent.

Assay Carry out the method for high performance liquid chromatography (Appendix Ⅵ D).

Chromatographic system and system suitability Use octadecylsilane bonded silica gel as the stationary phase and a

mixture of acetonitrile and triethylamine in acetic acid solution (add 8 ml of triethylamine in 30 ml glacial acetic acid and dilute to 1000 ml with water) (18 : 82) as the mobile phase. As detector a spectrophotometer set at 289 nm. The number of theoretical plates of the column is not less than 3000, calculated with the reference to the peak of protopine.

Reference solution Weigh accurately 10 mg of protopine CRS, dissolve in 5 ml of 1% solution of hydrochloric acid in a 50 ml volumetric flask, dilute with 50% methanol to volume and mix well. Transfer accurately 5 ml to a 25 ml volumetric flask and dilute to volume with 50% methanol to produce a solution containing 40 μg per ml.

Test solution Weigh accurately 0.5 g of the coarse powder, in a stopper conical flask, add accurately 50 ml of 50% methanol, and weigh. Heat under reflux for 1 hour, cool and weigh again, replenish the loss of solvent with 50% methanol and mix well. Filter through a millipore film (0.45 μm) and use the successive filtrate as the test solution.

Procedure Inject accurately 10-20 μl of each of the reference solution and the test solution, respectively, into the column, and calculate the content.
It contains not less than 0.30 per cent of protopine ($C_{20}H_{19}NO_5$), calculated with reference to the dried drug.

Action To activate blood circulation and drain meridians, promote the flow of *qi* and relieve pain.

Indications Stoke and hemiparalysis, traumatic injuries, rheumatic arthritis, sciatica.

Usage and dosage 6-12 g, ground into powder and divided into 3 doses.

Storage Preserve in a ventilated and dry place.

Preparation Decumbent Corydalis Tablets

Rhizoma Curculiginis
(仙茅, Xianmao)

Common Curculigo Rhizome

Common Curculigo Rhizome is the dried rhizome of *Curculigo orchioides* Gaertn. (Fam. Amaryllidaceae). The drug is collected in autumn or winter, removed from caudex and fibrous roots, washed clean, and dried.

Description Cylindrycal, slightly curved, 3-10 cm long, 4-12 mm in diameter. Externally blackish-brown to brown, rugged, with pitted fibrous root scars and transversal wrinkles. Texture hard and fragile, easily broken, fracture uneven, pale brownish-white to brown and dark brown in the centre. Odour, slight aromatic; taste, bitterish and pungent.

Identification (1) Transverse section: Cork consisting of 3-10 layers of cells. Cortex broad, occasionally showing root trace vascular bundles, some marginal cells containing prisms of calcium oxalate, endodermis distinct. Stele vascular bundles amphivasal and collateral, scattered. Mucilage cells numerous, scattered in parenchyma, subrounded, 60-200 μm in diameter, containing raphides of calcium oxalate, 50-180 μm long. Parenchymatous cells filled with starch granules.

(2) Heat under reflux 2 g of the powder with 20 ml of ethanol on a water bath for 30 minutes, and filter. Evaporate the filtrate to dryness, dissolve the residue in 1 ml of ethyl acetate, and use the supernatant as the test solution. Dissolve curculigoside CRS in ethyl acetate to produce a solution containing 0.1 mg per ml as the reference solution. Carry out the method for thin layer chromatography (Appendix Ⅵ B), using sillica gel G as the coating substance and a mixture of ethyl acetate, methanol and formic acid (10 : 1 : 0.1) as the mobile phase. Apply separately to the plate 2 μl of each of the two solutions. After developing and removal of the plate, dry in air, and spray with a mixture of 2% solution of potassium ferrocyanide and 2% solution of ferric chloride (1 : 1). The blue spot in the chromatogram obtained with the test solution corresponds in position and colour to the spot in the chromatogram obtained with the reference solution.

Foreign matter (Fibrous root and root stock) Not more than 4.0 per cent (Appendix Ⅸ A).

Water Carry out the method for determination of water (Appendix Ⅸ H, method 1), not more than 13.0 per cent.

Total ash Not more than 10.0 per cent (Appendix Ⅸ K).

Acid-insoluble ash Not more than 2.0 per cent (Appendix Ⅸ K).

Extractives Carry out the hot extraction method for determination of ethanol-soluble extractives (Appendix Ⅹ A), using ethanol as the solvent, not less than 7.0 per cent.

Assay Carry out the method for high performance liquid chromatography (Appendix Ⅵ D).

Chromatographic system and system suitability Use octadecylsilane bonded silica gel as the stationary phase and a mixture of acetonitrile and 0.1% solution of phosphoric acid (21 : 79) as the mobile phase. As detector a spectrophotometer set at 285 nm. The number of theoretical plates of the column is not less than 3000, calculated with the reference to the peak of curculigoside.

Reference solution Weigh accurately a quantity of curculigoside CRS, dissolve in methanol to produce a solution containing 70 μg per ml.

Test solution Weigh accurately 1 g of the powder (through No. 3 sieve), add accurately 50 ml of methanol and weigh. Heat under reflux for 2 hours, cool and weigh again, replenish the loss of weight with methanol, mix well and filter. Evaporate accurately 20 ml of the successive filtrate to dryness, dissolve the residue in methanol, transfer to a 10 ml volumetric flask, dilute with methanol to volume and mix well.

Procedure Inject accurately 10 μl of each of the reference solution and the test solution, respectively, into the column, and calculate the content.
It contains not less than 0.10 per cent of curculigoside ($C_{22}H_{26}O_{11}$), calculated with reference to the dried drug.

Processing Eliminate foreign matter, wash clean, cut into sections, and dry.

Action To reinforce *kidney-yang*, strengthen the tendons and bones, and dispel *cold-dampness*.

Indications Weakness of the legs; arthrits of the lumbar and knee joints due to affection of *cold-dampness*; watery diarrhea with aversion to cold.

Usage and dosage 3-9 g.

Storage Preserve in a dry place, protected from mould and moth.

Rhizoma Curcumae (莪术, Ezhu)

Zedoray Rhizome

Zedoray Rhizome is the dried rhizome of *Curcuma phaeocaulis* Valeton, *Curcuma kwangsiensis* S. G. Lee et C. F. Liang or *Curcuma wenyujin* Y. H. Chen et C. Ling (Fam. Zingiberaceae). The drug derived from the last species is commonly known as "Wen Ezhu". The drug is collected in winter when stem and leaves withered, washed clean, steamed or boiled thoroughly, dried in the sun or dried at a lower temperature, removed from fibrous roots and foreign matter.

Description *Rhizome of Curcuma phaeocaulis* Ovoid, elongate ovoid, conical or elongate fusiform, frequently apex obtuse, base obtuse and rounded, 2-8 cm long, 1.5-4 cm in diameter. Externally greyish-yellow to greyish-brown, the upper part conspicuously raised-annulated and with rounded and slightly dented rootlet scars, or remaining rootlets, some exhibiting a row of concave bud scars and subrounded lateral rhizome scars on two sides, respectively, and some showing knife cut traces. Texture heavy and hard, fracture greyish-brown to bluish-brown, waxy, usually attached with greyish-brown powder, bark and stele easily detachable, endodermal ring deep brown. Odour, slight aromatic; taste, slight bitter and pungent.

Rhizome of Curcuma kwangsiensis Slightly rasied-annulated, fracture yellowish-brown to brown, usually attached with pale yellow powder, endodermal ring yellowish-white.

Rhizome of Curcuma wenyujin (*wen Ezhu*) Fracture yellowish-brown to dark brown, usually attached with pale yellow to yellowish-brown powder. Odour aromatic or slightly aromatic.

Identification Transverse section: Cork consisting of several layers of cells, sometime removed, cortex scattered with leaf-trace bundles, endodermis distinct. Stele broad, vascular bundles collateral and scattered, some of them relatively small, relatively close arranged along pericycle. Parenchymatous cells filled with gelatinized starch masses, some cells containing golden oily matter scattered in parenchma.

Absorbance Weigh accurately 30 mg of the medium powder, add 10 ml of chloroform, ultrasonicate for 40 minutes or macerate for 24 hours, filter. Transfer the filtrate into a 10 ml volumetric flask, add chloroform to volume, and mix well. Carry out the method for ultraviolet spectrophotometry and colourimetry (Appendix Ⅴ A), the resulting solution exhibits a maximum at 242 nm and the absorbance is not less than 0.45.

Total ash Not more than 7.0 per cent (Appendix Ⅸ K).

Acid-insoluble ash Not more than 2.0 per cent (Appendix Ⅸ K).

Extractives Carry out the method for determination of ethanol-soluble extractives (Appendix Ⅹ A, the hot extraction method), using dilute ethanol as solvent, not less than 7.0 per cent.

Assay Carry out the method for determination of volatile oil (Appendix Ⅹ D).
It contains not less than 1.5 per cent of volatile oil (ml/g).

Processing *Rhizoma Curcumae* Eliminate foreign matter, soak slightly, wash clean, steam to be soft, cut into thin slices, and dry.

Rhizoma Curcumae (*processed with vinegar*) Boil the Rhizoma Curcumae as described under the method for boiling with vinegar (Appendix Ⅱ D) until vinegar is absorbed entirely, cool slightly, cut into thick slices, and dry.

Action To promote the flow of *qi* and eliminate blood stasis with strong effect, and relieve pain by removing the stagnation of undigested food.

Indications Mass in the abdomen, amenorrhea due to *blood stasis*; distension and pain due to stagnation of undigested food; carcinoma of cervix at early stage.

Usage and dosage 6-9 g.

Precaution Contraindicated in pregnancy.

Storage Preserve in a dry place, protected from moth.

Rhizoma Curcumae Longae (姜黄, Jianghuang)

Turmeric

Turmeric is the dried rhizome of *Curcuma longa* L. (Fam. Zingiberaceae). The drug is collected in winter when the aerial part withers, washed clean, boiled or steamed thoroughly, dried in the sun and removed from fibrous roots.

Description Irregularly ovoid, cylindrical or fusiform, frequently curved, some shortly branched in Y-shape, 2-5 cm long, 1-3 cm in diameter. Externally dark yellow, rough, with wrinkled striations and distinct annulations, and exhibiting some rounded scars of branched rhizomes and fibrous root scars. Texture hard, uneasily broken, fracture brownish-yellow to golden-yellow, horny with wax lustre, endodermis ring distinct, scattered with dotted vascular bundles. Odour, characteristic and aromatic; taste, bitter and pungent.

Identification (1) Transverse section: Epidermal cells flattened, thin-walled. Cortex broad, scattered with leaf-trace bundles, showing 6-8 layers of flattened cork cells at the outside near the epidermis, endodermal cells with distinct Casparian dots. Pericycle consisting of 1-2 rows of parenchymatous cells. Collateral bundles scattered, some more near the pericycle and lessened inward. Parenchymatous cells packed with droplets of volatile oil, starch granules and reddish-brown pigments.
(2) To 0.2 g of the powder add 20 ml of dehydrated ethanol, shake, macerate for 30 minutes and filter. Evaporate the filtrate to dryness and dissolve the residue in 2 ml of dehydrated ethanol as the test solution. Prepare a solution of Rhizoma Curcumae Longae reference drug in the same manner as the reference drug solution. Dissolve a quantity of curcumin CRS in dehydrated ethanol to produce a solution containing 0.5 mg per ml as the reference solution. Carry out the method for thin layer chromatography (Appendix Ⅵ B), using silica gel G as the coating substance and a mixture of chloroform, methanol and formic acid (96 : 4 : 0.7) as the mobile phase. Apply separately to the plate 4 μl of each of the above three solutions. After developing and removal of the plate, dry in air. Examine in daylight and under ultraviolet light at 365 nm. The spots and the fluorescent spots in the chromatogram obtained with the test solution correspond in position and colour to the spots and the fluorescent spots obtained with the reference drug solution and the reference solution.

Water Carry out the method for determination of water (Appendix Ⅸ H, method 2), not more than 16.0 per cent.

Total ash Not more than 7.0 per cent (Appendix Ⅸ K).

Acid-insoluble ash Not more than 1.0 per cent (Appendix Ⅸ K).

Extractives Carry out the method for determination of ethanol-soluble extractives (Appendix Ⅹ A, the cold maceration method), using dilute ethanol as the solvent, not less than 12.0 per cent.

Assay Volatile oil Carry out the method for determination of volatile oil (Appendix Ⅹ D).
It contains not less than 7.0 per cent (ml/g) of volatile oil.

Curcumin Carry out the method for high performance liquid chromatography (Appendix Ⅵ D).

Chromatographic system and system suitability Use octylsilane bonded silica gel as the stationary phase and a mixture of acetonitrile and 4% solution of acetic acid (48 : 52) as the mobile phase. As detector a spectrophotometer set at 430 nm. The number of theoretical plates of the column is not less than 4000, calculated with the reference to the peak of curcumin.

Reference solution Weigh accurately a quantity of curcumin CRS, dissolve in methanol to produce a solution containing 10 μg per ml.

Test solution Weigh accurately 0.2 g of the powder to a stopper conical flask, add accurately 20 ml of methanol and weigh. Heat under reflux for 30 minutes, cool and weigh again, replenish the loss of weight with methanol, mix well and centrifuge. Measure accurately 1 ml of the supernatant to a 20 ml volumetric flask, dilute with methanol to volume and mix well.

Procedure Inject accurately 5 μl of each of the reference solution and the test solution, respectively, into the column, and calculate the content.
It contains not less than 1.0 per cent of curcumin ($C_{21}H_{20}O_6$), calculated with reference to the dried drug.

Processing Eliminate foreign matter, soak briefly, wash clean, soften thoroughly, cut into thick slices and dry in the sun.

Action To eliminate blood stasis, promote the flow of *qi*, stimulate menstrual discharge and relieve pain.

Indications Pricking pain in the chest and hypochondriac regions; amenorrhea; mass formation in the abdomen; rheumatic pain of the shoulders and arms; traumatic swelling and pain.

Usage and dosage 3-9 g; appropriate quantity for external use.

Storage Preserve in a cool and dry place.

Rhizoma Cyperi (香附, Xiangfu)

Nutgrass Galingale Rhizome

Nutgrass Galingale Rhizome is the dried rhizome of *Cyperus rotundus* L. (Fam. Cyperaceae). The drug is collected in autumn, burnt off the fibrous roots, boiled briefly or steamed thoroughly and dried in the sun, or dried in the sun directly.

Description Frequently fusiform, some slightly curved, 2-3.5 cm long, 0.5-1 cm in diameter. Externally dark brown or blackish-brown, longitudinally wrinkled and with 6-10 slightly prominent, annular nodes with brown fibrous roots and remaining root-scars; or slightly smooth and exhibiting indistinct annular nodes with the fibrous roots completely removed. Texture hard, fracure of steamed rhizomes appearing yellowish-brown or reddish-brown, horny; fracture of the unsteamed ones white and starchy, an endodermis ring obvious, stele darkened in colour, with scattered dotted vascular bundles. Odour, aromatic; taste, slightly bitter.

Identification (1) Powder: Pale brown. Secretory cells subrounded, 35-72 μm in diameter, containing pale yellowish-brown to reddish-brown secretion, 5-8 adjacent cells radially arranged in a circle. Epidermal cells polygonal, frequently with hypodermal fibre bundles and sclerenchymatous cells. Hypodermal fibres in bundles, dark brown or rddish-brown, 7-22 μm in diameter, walls thickened. Sclerenchymatous cells subsquare, subrounded or irregular, walls slightly thickened with pits. Stone cells rare, subsquare, subrounded or subpolygonal, walls relatvely thickened.
(2) Macerate 1 g of the powder in 5 ml of ether for 1 hour with frequent shaking, filter and evaporate the filtrate to dryness. Dissolve the residue in 0.5 ml of ethyl acetate as the test solution. Dissolve α-cyperone CRS in ethyl acetate to produce a solution containing 1 mg per ml as the reference solution. Carry out the method for thin layer chromatography (Appendix Ⅵ B), using silica gel GF_{254} as the coating substances and benzene, ethyl acetate and glacial acetic acid (92 : 5 : 5) as the mobile phase. Apply separately to the plate 5 μl of each of the two solutions. After developing and removal of the plate, dry in air and examine under ultraviolet light at 254 nm. A dark blue spot in the chromatogram obtained with the test solution corresponds in position and colour to the spot in the chromatogram obtained with the reference solution. Then spray with 2,4-dinitrophenyl hydrazine TS, the colour of the spots turns gradually orange-red on standing.

Total ash Not more than 4.0 per cent (Appendix Ⅸ K).

Processing *Rhizoma Cyperi* Remove fibrous roots and foreign matter, pound to pieces or cut into thin slices.

Rhizoma Cyperi (*processed with vinegar*) Stir-bake the pieces or slices of Rhizoma Cyperi as described under the method for stir-baking with vinegar (Appendix Ⅱ D) to dryness.

Action To remove stagnation of *qi*, regulate menstruation and relieve pain.

Indications Stagnation of the *liver-qi* characterized by distending pain in the chest, hypochondria and epigastrium, indigestion, feeling of stuffiness in the chest and epigastrium, abdominal colic, distending pain in the breast, menstrual disorders, amenorrhea or dysmenorrhea.

Usage and dosage 6-9 g.

Storage Preserve in a cool and dry place, protected from moth.

Rhizoma Dioscoreae (山药, Shanyao)

Common Yam Rhizome

Common Yam Rhizome is the dried rhizome of *Dioscorea opposita* Thunb. (Fam. Dioscoreaceae). The drug is collected in winter when the stem and leaves are withered, cut off, washed

clean and peeled outer bark and fibrous roots, and then dried. Alternatively, the large, straight and dried rhizome is sorted, soaked in clean water until no dry core visible and softened thoroughly, cut two ends to smooth plane and rubbed on a board to become cylindrical in shape, dried in the sun and finally polished. It is known as "Guang Shanyao" (Polished Common Yam Rhizome).

Description Subcylindrical, curved or somewhat flattened, 15-30 cm long, 1.5-6 cm in diameter. Externally yellowish-white or pale yellow, longitudinally furrowed and wrinkled, and bearing fibrous root scars, with occasional patches of brownish cork. Texture heavy, compact and tough; uneasily broken, fracture white and starchy. Odour, slight; taste, weak, acidulous, and viscous on chewing. Guang Shanyao is cylindrical, the two ends even, 9-18 cm long, 1.5-3 cm in diameter, externally smooth, white or yellowish-white.

Identification Powder: Whitish. Simple starch granules compressed-ovoid, deltoid-ovoid, subrounded or oblong, 8-35 μm in diameter, hilum pointed, V-shaped, crosscriss or shortly cleft, striations visible. Compound starch granules few, usually consisting of 2-3 granules. Mucilage cells containing raphides of calcium oxalate, up to 240 μm long and needle crystals 2-5 μm wide. Vessels bordered-pitted, reticulated, spiral and annular, 12-48 μm in diameter.

Processing *Rhizoma Dioscoreae* Eliminate foreign matter, grade according to size, soak and soften thoroughly, cut into thick slices, and dry.

Rhizoma Dioscoreae (*stir-baked with bran*) Stir-bake the slices of Rhizoma Dioscoreae as described under the method for stir-baking with bran (Appendix Ⅱ D) to yellowish.

Action To replenish the spleen and stomach, promote fluid secretion and benefit the lung, and strengthen the kidney and restrain seminal discharge.

Rhizoma Dioscoreae (*stir-baked with bran*) To replenish the spleen and promote the stomach function.

Indications Anorexia and chronic diarrhea due to diminished function of the spleen; cough and dyspnea due to diminished function of the lung; seminal emission, excessive leukorrhea, frequency of urination or diabetes due to deficiency of the kidney.

Rhizoma Dioscoreae (*stir-baked with bran*) Diminished function of the spleen with anorexia, diarrhea and excessive leukorrhea.

Usage and dosage 15-30 g.

Storage Preserve in a ventilated and dry place, protected from moth.

Rhizoma Dioscoreae Hypoglaucae (粉萆薢, Fenbixie)

Hypoglaucous Collett Yam Rhizome

Hypoglaucous Collett Yam Rhizome is the dried rhizome of *Dioscorea hypoglauca* Palibin (Fam. Dioscoreaceae). The drug is collected in autumn and winter, removed from the fibrous roots, washed clean, cut into slices, and dried in the sun.

Description Occurring in irregularly thin slices, edge uneven, varying in size, about 0.5 mm thick, some with brownish-black or greyish-brown outer bark. Cut surface yellowish-white or pale greyish-brown, dotted vascular bundles scattered. Texture loose, slightly elastic, easily broken, new cut surface appearing yellowish near outer bark. Odour, slight; taste, pungent and slightly bitter.

Identification (1) Transverse section: Cork cells of more layers. Cortex narrow, cells tangentially elongated, walls slightly thickened, pits distinct, mucilage cells scattered, containing raphides of calcium oxalate. Collateral and amphivasal vascular bundles scattered in stele, parenchymatous cells with slightly thickened and pitted walls, containing starch granules.
Powder: Yellowish-white. Simple starch granules rounded, ovoid or long-elliptical, 5-32 μm in diameter, up to 40 μm long, hilum pointed or cleft-like, compound granules less frequent, mostly composed of two components. Sclerenchymatous cells abundant, walls lignified, pits distinct, some similar to stone cells, polygonal, fusiform or subrectangular, 40-80 μm in diameter, up to 224 μm long. Raphides of calcium oxalate 64-84 μm long.
(2) Macerate 10 g of the powder in 100 ml of water overnight, heat on a water bath at 60℃ for 10 minutes, filter while hot. Measure separately 2 ml of the filtrate to two test tubes. To one tube add 2 ml of sodium hydroxide TS, and to another tube add 2 ml of hydrochloric acid solution (1→20), stopper well, shake vigorously for 1 minute, the foam produced in the alkaline solution is several volumes higher than that produced in the acid solution.

Action To remove turbid *damp*, and relieve rheumatic condition.

Indications Chyluria, turbid urine mixed with whitish substance or whitish discharge from urethra, excessive leukorrhea; rheumatic arthralgia with limitation of motion and pain in the loins and knees.

Usage and dosage 9-15 g.

Storage Preserve in a ventilated and dry place.

Rhizoma Dioscoreae Nipponicae (穿山龙, Chuanshanlong)

Nippon Yam Rhizome

Nippon Yam Rhizome is the dried rhizome of *Dioscorea nipponica* Makino (Fam. Dioscoreaceae). The drug is collected in autumn or spring, washed clean, removed from fibrous roots and outer bark, dried in the sun.

Description Subcylindrical, slightly curved, 15-20 cm long, 1.0-15 cm in diameter. Externally yellowish-white or brownish-yellow, irregularly and longitudinally furrowed, bearing spinous remains of roots and protuberant stem scars on one side. Texture hard, fracture even, white or yellowish-white, scattered pale brown dotted vascular bundles. Odour, slight; taste, bitter and astringent.

Identification (1) Powder: Pale yellow. Starch granules simple, elliptical, subtriangular, conical or irregular, 3-17 μm in diameter, up to 33 μm long, hilum slit-shaped. Needles of calcium oxalate scattered, or in bundles occurring in mucilage cells, up to 110 μm long. Parenchymatous cells lignified, pale yellow or yellow, long elliptical, rectangular or rhombic, with small and sparse pits. Bordered pitted vessels 17-56 μm in diameter, pits fine and dense, elliptical.
(2) Dissolve a quantity of diosgenin CRS in methanol to produce a solution containing 0.5 mg per ml as the reference solution. Carry out the method for thin layer chromatography

(Appendix Ⅵ B), using silica gel G as the coating substance and a mixture of chloroform and methanol (20 : 0.2) as the mobile phase. Apply separately to the plate 3 μl of each of the test solution obtained under *Assay* and the above reference solution. After developing and removal of the plate, dry in air, and spray with 10% solution of phosphomolybdic acid in ethanol. The spot in the chromatogram obtained with the test solution corresponds in position and colour to the spot in the chromatogram obtained with the reference solution.

Water Carry out the method for the determination of water (Appendix Ⅸ H, Method 1), not more than 9.0 per cent.

Total ash Not more than 5.0 per cent (Appendix Ⅸ K).

Acid-insoluble ash Not more than 1.0 per cent (Appendix Ⅸ K).

Assay Carry out the method for high performance liquid chromatography (Appendix Ⅵ D).

Chromatographic system and system suitability Use octadecylsilane bonded silica gel as the stationary phase and a mixture of methanol and water (84 : 16) as the mobile phase. As detector a spectrophotometer set at 203 nm. The number of theoretical plates of the column is not less than 4000, calculated with the reference to the peak of diosgenin.

Reference solution Dissolve a quantity of diosgenin CRS, accurately weighed, in methanol to produce a solution containing 0.5 mg per ml as reference solution.

Test solution Weigh accurately 1 g of the powder (through No. 4 sieve) to a conical flask, add 50 ml of methanol, ultrasonicate (power, 250 W; frequency, 33 kHz) for 30 minutes, filter, and rinse the residue with 20 ml of methanol. Combine the methanol solutions and evaporate to dryness. Dissolve the residue in successive quantities of 10 ml, 5 ml and 5 ml of 3 mol/L hydrochloric acid solution, successively transfer to a conical flask, heat to hydrolyze on a water bath for 30 minutes, cool, add 30 ml of chloroform, heat under reflux for 15 minutes, repeat the extraction with chloroform in the same manner. Filter, wash the container and residue with 30 ml of chloroform, evaporate the combined extracts to dryness, dissolve the residue in methanol, transfer to a 25 ml volumetric flask, dilute to volume with methanol, and mix well.

Procedures Inject accurately 20 μl of each of the reference solution and the test solution respectively, into the column, determine and calculate the content.

It contains not less than 1.1 per cent of diosgenin ($C_{27}H_{42}O_3$), calculated with reference to the dried drug.

Processing Eliminate foreign matter, wash clean, soften thoroughly, cut into slices, and dry.

Action To expel *wind-dampness*, relieve pain, relax muscles and tendons, promote blood circulation, relieve cough and asthma and resolve phlegm.

Indications Rheumatic arthritis, pain and numbness of the lower back and legs, Kaschin-Bek disease, injury from falling, lumbar sprain, chronic bronchitis, cough and asthma.

Usage and dosage 9-15 g. Or prepared into a medicinal wine.

Precaution Defend from anaphylaxis while crushing or processing.

Storage Preserve in a dry place.

Rhizoma Dioscoreae Septemlobae (绵萆薢, Mianbixie)

Sevenlobed Yam Rhizome

Sevenlobed Yam Rhizome is the dried rhizome of *Dioscorea septemloba* Thunb. or *Dioscorea futschauensis* Uline ex R. Kunth (Fam. Dioscoreaceae). The drug is collected in autumn and winter, removed from fibrous roots, washed clean, cut into slices, and dried in the sun.

Description Occurring in irregularly oblique slices, border uneven, varying in size, about 2-5 mm thick. Externally yellowish-brown to brownish-black, sparsely bearing remains of fibrous roots, protruding conically. Texture loose, somewhat spongy, cut surface greyish-white to pale greyish-brown, yellowish-brown spots of vascular bundle scattered. Odour, slight; taste, slightly bitter.

Identification (1) Powder: Pale yellowish-brown. Starch granules abundant, simple starch granules ovoid, ellipsoid, subspherical, triangular or irregular, some acute at one end, some knotty, 10-70 μm in diameter, hilum cleft-like, V-shaped or pointed, striations mostly indistinct. Needles of calcium oxalate in bundles, 90-210 μm long. Parenchymatous cell walls slightly thickened, pits distinct. Bordered-pitted vessels 17-84 μm in diameter, pits distinct. Cork cells brownish yellow and polygonal.

(2) To 2 g of the powder add 50 ml of methanol, heat under reflux for 1 hour and filter. Evaporate the filtrate to dryness, dissolve the residue in 25 ml of water, wash with 25 ml of ether and discard the ether solution. Add 2 ml of hydrochloric acid to the water solution, heat under reflux for 1.5 hours and cool. Extract with two 25-ml quantities of ether, combine the ether extracts, evaporate to dryness, and dissolve the residue in 1 ml of chloroform as the test solution. Prepare a solution of 2 g of Rhizoma Dioscoreae Septemlobae reference drug in the same manner as the reference drug solution. Carry out the method for thin layer chromatography (Appendix Ⅵ B), using silica gel G as the coating substance and a mixture of chloroform and acetone (9 : 1) as the mobile phase. Apply separately to the plate 10 μl of the above two solutions. After developing and removal of the plate, dry in air, spray with phosphomolybdic acid TS and heat at 105℃ to the spots clear. The spots in the chromatogram obtained with the test solution correspond in position and colour to the spots obtained with the reference drug solution.

Water Carry out the method for determination of water (Appendix Ⅸ H, method 1), not more than 11.0 per cent.

Total ash Not more than 6.0 per cent (Appendix Ⅸ K).

Acid-insoluble ash Not more than 1.0 per cent (Appendix Ⅸ K).

Extractives Carry out the method for determination of ethanol-soluble extractives (Appendix Ⅹ A, the hot extraction method), using dilute ethanol as the solvent, not less than 15.0 per cent.

Action To remove turbid *damp*, and relieve rheumatic condition.

Indications Gonorrhea with whitish discharge from the urethra, excessive leukorrhea; ulcers caused by *damp-heat*, arthralgia of the lumbar spine and knees.

Usage and dosage 9-15 g.

Storage Preserve in a ventilated and dry place.

Rhizoma Drynariae (骨碎补, Gusuibu)

Fortune's Drynaria Rhizome

Fortune's Drynaria Rhizome is the dried rhizome of *Drynaria fortunei* (Kunze) J. Sm. (Fam. Polypodiaceae). The drug is collected all year round, removed from soil and dried, or burned off the hairs (ramenta).

Description Flattened long slat-shaped, mostly curved, branched, 5-15 cm long, 1-1.5 cm wide, 2-5 mm thick. The surface closely covered with dark brown hairy ramenta, and the burnt ones brown or dark brown, the upper surface and both sides marked by raised or depressed circular frond scars, rarely by remains of frond-bases and fibrous roots. Texture light, fragile, easily broken, fracture reddish-brown, vascular bundles yellow dotted and arranged in a ring. Odour, slight; taste, weak and slightly astringent.

Identification Heat under reflux 0.5 g of the powder in 30 ml of methanol for 1 hour, cool, and filter. Evaporate the filtrate to dryness, and dissolve the residue in 1 ml of methanol as the test solution. Dissolve naringin CRS in methanol to produce a solution containing 0.5 mg per ml as the reference solution. Carry out the method for thin layer chromatography (Appendix Ⅵ B), using silica gel G as the coating substance and the upper layer of the mixture of benzene, ethyl acetate, formic acid and water (1 : 12 : 2.5 : 3) as the mobile phase. Apply separately 4 μl of each of the two solutions to the plate. After developing and removal of the plate, dry in air. Spray with aluminium chloride TS, and examine under ultraviolet light at 365 nm. The fluorescent spot in the chromatogram obtained with the test solution corresponds in position and colour to the spot in the chromatogram obtained with the reference solution.

Assay Carry out the method for high performance liquid chromatography (Appendix Ⅵ D).

Chromatographic system and system suitability Use octadecylsilane bonded silica gel as the stationary phase and a mixture of methanol, acetic acid and water (35 : 4 : 65) as the mobile phase. As detector a spectrophotometer set at 283 nm. The number of theoretical plates of the column is not less than 3000, calculated with the reference to the peak of naringin.

Reference solution Weigh accurately 20 mg of naringin CRS, dried to constant weight at 110℃, in a 100 ml volumetric flask, dilute with methanol to volume, and mix well. Accurately measure 3 ml in a 10 ml volumetric flask, dilute with methanol to volume, and mix well (containing 60 μg of naringin per ml).

Test solution Weigh accurately 0.25 g of the coarse powder, add 30 ml of methanol, heat under reflux on a water bath for 3 hours, cool, and filter. Transfer the filtrate to a 50 ml volumetric flask, wash the container with a small quantity of methanol for several times, filter the washings to the same flask, dilute with methanol to volume, and mix well.

Procedure Inject accurately 10 μl of each of the reference solution and the test solution, respectively, into the column, determine and calculate the content.
It contains not less than 0.50 per cent of naringin ($C_{27}H_{32}O_{14}$), calculated with reference to the dried drug.

Processing *Rhizoma Drynariae* Eliminate foreign matter, wash clean, soften thoroughly, cut into thick slices, and dry.

Rhizoma Drynariae (*scalding*) Scald the clean Rhizoma Drynariae of its slices with sand as described under the method for scalding (Appendix Ⅱ D) until inflated, and strike to remove hairs.

Action To replenish the kidney, strengthen the bones, promote the healing of fracture, and relieve pain.

Indications Deficiency syndrome of the kidney marked by back pain, tinnitus, impairment of hearing and looseness of teeth; traumatic injuries, bone fracture; external use for alopecia areata, vitiligo.

Usage and dosage 3-9 g, or 6-15 g of the fresh rhizome; for external use, appropriate quantity of the fresh rhizome.

Storage Preserve in a dry place.

Rhizoma Dryopteridis Crassirhizomatis (绵马贯众, Mianmaguanzhong)

Male Fern Rhizome

Male Fern Rhizome is the dried rhizome and frond bases of *Dryopteris crassirhizoma* Nakai (Fam. Dryopteridaceae). The drug is collected in autumn, pared off frond and fibrous root, removed from soil, dried in the sun.

Description Long obovate, slightly curved, the upper end obtuse or truncate, the lower end acuminate, some cut longitudinally into two pieces, 7-20 cm long, 4-8 cm in diameter. Externally yellowish-brown to black brown, densely covered with regularly arranged frond-bases and ramenta, and with curved rootlets. The frond bases oblate rounded, 3-5 cm long, 5-10 mm in diameter, externally with longitudinal edge, texture hard and fragile, fracture slight smooth, brown, and showing 5-13 yellowish-white meristeles arranged in a ring. The outside of each frond base with three rootlets respectivly, ramenta striped lanceolate, entire, usually fallen off. Texture hard, fracture slight even, dark green to brown, with 5-13 yellowish-white meristeles arranged in a ring, relatively more leaf trace bundles scattered in the outer part. Odour characteristic; taste, firstly slight astringent and then gradually bitter or pungent.

Identification (1) Transverse section of frond base: Epidermis consisting of a layer of small cells with thickened outer walls, usually falling off, hypodermis cells consisting of 10 layers of sclerenchymatous polygonal cells, brown to dark brown. Parenchymatous cells arranged loosely, having internal unicellular glandular hairs in intercellular spaces, heads spherical or pear-shaped, containing brown contents. Amphicribral vascular bundle 5-13, arranged in a ring, each bundle surrounded by a layer of oblate and small endodermis cells, Casparian dots distinct and with oil drops scattered, the outside having 1-2 layer of pericycle parenchymatous cells containing brown contents and starch granules.
(2) To 0.5 g of the powder add 20 ml of cyclohexane, ultrasonicate for 30 minutes, use the supernatant as the test solution. Prepare a solution of Rhizoma Dryopteris Crassirhizomatis reference drug in the same manner as the reference drug solution. Carry out the method for thin layer chromatography (Appendix Ⅵ B), using modified silica gel G (to each 10 g silica gel G, add 10 ml of disodium hydrogen phosphate-citric acid BS (pH 7.0), 60 mg of vitamin C and 20 ml of sodium carboxymethylcellulose solution, dry at room temperature, protected from light, activated at 50℃ for two hours before use) as the coating

substance and a mixture of *n*-hexane, chloroform and methanol (30 : 15 : 1) as the mobile phase. Apply separately 2-4 μl of each of the above two solutions to the plate. After developing over 15 cm in a chamber pre-saturated with mobile phase for 2 hours and removal of the plate, dry in air, spray immediately with 0.1% solution of fast blue BB salt in dilute ethanol, heat at 40℃ for 1 hour. The spots in the chromatogram obtained with the test solution correspond in position and colour to the spots in the chromatogram obtained with the reference drug solution.

Processing Eliminate the foreign matter, spray water, wash clean, soften thoroughly, cut into thick slices, dry and sift crambs.

In irregular thick slices or pieces, externally brownish-yellow to blackish-brown. Odour characteristic; taste firstly slight astringent and then gradually bitter or pungent. Carry out the above test (2) of Identification, it shows the same result.

Action To remove *heat* and counteract *toxicity*, expel intestinal worm.

Rhizoma Dryopteris Crassirhizomae (*carbonized*) To arrest bleeding.

Indications Abdomen pain due to intestinal worms, sores.

Rhizoma Dryopteris Crassirhizomae (*carbonized*) Uterine bleeding.

Usage and dosage 4.5-9g.

Storage Preserve in a ventilated and dry place.

Rhizoma Dryopteridis Crassirhizomatis Carbonisatum (绵马贯众炭，Mianmaguanzhongtan)

Carbonized Male Fern Rhizome

The drug is the processed Rhizoma Dryopteridis Crassirhizomatis.

Procedure Stir bake the slices or pieces of Rhizoma Dryopteridis Crassirhizomatis under the method for carbonized by stir-baking (Appendix Ⅱ D) until the surface become black, spraying a little water to put out sparks, take it out and dry in air.

Description Irregular thick pieces or fragments. Externally charred black, internally charred brown. Taste astringent.

Identification To 1 g of the powder add 20 ml of cyclohexane, ultrasonicate for 30 minutes, use the supernatant as the test solution. Prepare a solution of 0.5 g of Rhizoma Dryopteris Crassirhizomatis reference drug in the same manner as the reference drug solution. Carry out the method for thin layer chromatography (Appendix Ⅵ B), using modified silica gel G, (to each 10 g silica gel G, add 10 ml of disodium hydrogen phosphate-citric acid BS (pH 7), 60 mg of vitamin C and 20 ml of sodium carboxymethylcellulose solution, mix well), make the plates, dry at room temperature and protected from light, activated at 50℃ for 2 hours before use) as the coating substance and a mixture of *n*-hexane, chloroform and methanol (30 : 15 : 1) as the mobile phase. Apply separately to the plate 2-4 μl of each of the above two solutions. After developing more than 15 cm in a chamber pre-saturated with the mobile phase for 2 hours, removal of the plate, spray immediately with 0.3% solution of fast blue BB salt in dilute ethanol, and heat at 40℃ for 1 hour. The spots in the chromatogram obtained with the test solution correspond in position and colour to the spots in the chromatogram obtained with the reference drug solution.

Total ash Not more than 7.0 per cent (Appendix Ⅸ K).

Acid-insoluble ash Not more than 1.5 per cent (Appendix Ⅸ K).

Extractives Carry out the hot extraction method as described under the determination of ethanol-soluble extractives (Appendix Ⅹ A), using dilute ethanol as the solvent, not less than 16.0 per cent.

Action To induce astringency to stop bleeding.

Indications Metrorrhagia or metrostaxis.

Usage and dosage 4.5-9 g.

Storage Preserve in a ventilated and dry place.

Rhizoma et Radix Baphicacanthis Cusiae (南板蓝根，Nan Banlangen)

Baphicacanthus Root

Baphicacanthus Root is the dried rhizome and root of *Baphicacanthus cusia* (Nees) Bremek. (Fam. Acanthaceae). The drug is collected in summer and autumn, deprived from the aerial part, washed clean, and dried in the sun.

Description Rhizome subrounded, mostly tortuous, branched, 10-30 cm long, 0.1-1.0 cm in diameter. Externally greyish-brown, fine wrinkled longitudinally; nodes swollen, bearing rootlets and remained with stem scars; outer bark easily exfoliated, bluish-grey. Texture hard and fragile, easily broken, fracture uneven, bark bluish-grey, wood greyish-blue to pale yellowish-brown, pith in the centre. Root varying in thickness, curved and branched, rootlets slender and flexible. Odour, slightly; taste, week.

Indentification (1) Transverse section: Cork consisting of several rows of cells, containing brown contents. Cortex broad, having serveral rows of collenchyma cells outside; endodermis distinct; stone cells visible. Phloem relatively narrow, phloem fibres more frequent. Xylem broad, all the cells in it lignified; vessels single or 2-4 in groups, arranged radially; xylem rays broad. In pith cells subrounded or polygonal, stone cells found occasionally. Some parenchymatous cells containing elliptical cystoliths.

(2) To 2 g of the powder add 20 ml of ethanol, heat under reflux for 1 hour, filter, apply several drops of filtrate to a filter paper, dry in air, examine under ultraviolet light at 365 nm, a purplish-red fluorescence appears. Evaporate the remaining filtrate to dryness, dissolve the residue in 1 ml of glacial acetic acid, add 1 ml of acetic anhydride and 1 drop of sulfuric acid, the colour of the solution turns gradually from yellow to red, purple, blue then to dark green.

(3) To 2 g of the powder add 20 ml of chloroform, heat under reflux for 1 hour, filter, concentrate the filtrate to 2 ml as the test solution. Dissolve indigotine CRS and indirubin CRS in chloroform to produce a mixture containing 1 mg of indigotine and 0.5 mg of indirubin per ml as the reference solution. Carry out the method for thin layer chromatography (Appendix Ⅵ B), using silica gel G as the coating substance and a mixture of benzene, chloroform and acetone (5 : 4 : 1) as the mobile phase. Apply separately 10 μl of each of the above two solutions to the plate. After developing and removal of the plate, dry in air, examine immediately in daylight. A blue spot and a purplish-red spot in the chromatogram obtained with the test solution correspond in position and colour to the spots in the chromatogram obtained with the reference solution respectively.

Water Not more than 12.0 per cent (Appendix Ⅸ H, method 1).

Total ash Not more than 10.0 per cent (Appendix Ⅸ K).

Processing Eliminate foreign matter, wash clean, soften thoroughly, cut into thick slices, and dry.

Action To remove *heat* and counteract *toxicity*, reduce *heat* from blood.

Indications Eruptions in febrile diseases, erysipelas, influenza, epidemic meningitis.

Usage and dosage 9-15 g.

Storage Preserve in a dry place, protected from mould and moth.

Rhizoma et Radix Cynanchi Stauntonii (白前, Baiqian)

Willowleaf Swallowwort Rhizome

Willowleaf Swallowwort Rhizome is the dried rhizome and root of *Cynanchum stauntonii* (Decne.) Schltr. ex Lévl. or *Cynanchum glau-cescens* (Decne.) Hand.-Mazz. (Fam. Asclepiadaceae). The drug is collected in autumn, washed clean, and dried in the sun.

Description *Rhizome of Cynanchum stauntonii* Slenderly cylindrical, branched, somewhat curved, 4-15 cm long, 1.5-4 mm in diameter. Externally yellowish-white or yellowish-brown, obviously nodose, internodes 1.5-4.5 cm long, remains of stem at apex; Texture fragile, fracture hollowed. Numerous fine curved roots fascicled at nodes, up to 10 cm long, less than 1 mm in diameter, much-branched and appearing hairy-fibrous, usually coiled each other in a mass. Odour, slight; taste, sweetish.

Rhizome of Cynanchum glaucescens Relatively shorter and smaller, or slightly lump-shaped. Externally greyish-green or greyish-yellow, internodes 1-2 cm long. Texture relatively hard. Roots slightly curved, about 1 mm in diameter, less branched.

Identification Heat under reflux 1 g of the coarse powder with 10 ml of 70% ethanol for 1 hour and filter. Evaporate 1 ml of the filtrate to dryness, dissolve the residue in 1 ml of acetic anhydride, then add 1 drop of sulfuric acid. A reddish-violet colour is porduced for rhizome of *Cynanchi stauntonii*, which turns dull green on standing; a brownish-red colour is produced for rhizome of *Cynanchum glaucescens*, which unchanges on standing.

Processing *Rhizoma Cynanchi Stauntonii* Eliminate foreign matter, wash clean, soften thoroughly, cut into sections, and dry.

Rhizoma Cynanchi Stauntonii (*processed with honey*) Stir-bake the clean Rhizoma Cynanchi Stauntonii as described under the method of stir-baking with honey (Appendix Ⅱ D) until no more sticky to fingers.

Action To eliminate *phlegm* and relieve cough.

Indications Cough with copious expectoration and dyspnea.

Usage and dosage 3-9 g.

Storage Preserve in a ventilated and dry place.

Rhizoma et Radix Ligustici (藁本, Gaoben)

Chinese Lovage

Chinese Lovage is the dried rhizome and root of *Ligusticum sinense* Oliv. or *Ligusticum jeholense* Nakai et Kitag. (Fam. Umbelliferae). The drug is collected in autumn when stem and leaves withered or in the next spring when new growth started, removed from soil and dried.

Description *Rhizome of Ligusticum sinense* Irregulary tubercular cylindrical, somewhat twisted, branched, 3-10 cm long, 1-2 cm in diameter. Externally brown or dark brown, rough, with longitudinal wrinkles; the upper part remaining some sunken and rounded stem bases, the lower part bearing numerous dotted and prominent root scars and residual roots. Texture light, relatively hard, easily broken; fracture yellow or yellowish-white, fibrous. Odour, strongly aromatic; taste, pungent, bitter and slightly numbing.

Rhizome of Ligusticum jeholense Relatively small, rhizomes in irregular masses or columnar, with numerous slender and curved roots.

Identification Macerate 1 g of the powder in 10 ml of ether for 1 hour, then ultrasonicate for 20 minute, filter, concentrate the filtrate to 1 ml as the test solution. Prepare a solution of 1 g of Rhizoma Ligustici reference drug in the same manner as the reference drug solution. Carry out the method for thin layer chromatography (Appendix Ⅵ B), using silica gel G as the coating substance and a mixture of petroleum ether (60-90℃) and acetone (95 : 5) as the mobile phase. Apply separately to the plate 1 μl each of the two solutions. After developing about 10 cm and removal of the plate, dry in air, examine under ultraviolet light at 365 nm. The fluorescent spots in the chromatogram obtained with the test solution correspond in position and colour to the spots in the chromatogram obtained with the reference drug solution.

Water Carry out the method for determination of water (Appendix Ⅸ H, method 2), not more than 10.0 per cent.

Total ash Not more than 15.0 per cent (Appendix Ⅸ K).

Acid-insoluble ash Not more than 10.0 per cent (Appendix Ⅸ K).

Extractives Carry out the hot extraction method as described under the determination of ethanol-soluble extractives (Appendix Ⅹ A), using ethanol as the solvent, not less than 9.0 per cent.

Assay Carry out the method for high performance liquid chromatography (Appendix Ⅵ D).

Chromatographic system and system suitability Use octadecylsilane bonded silica gel as the stationary phase and a mixture of methanol and water (40 : 60) (adjust to pH 3.5 with phosphoric acid) as the mobile phase. As detector a spectrophotometer set at 320 nm. The number of theoretical plates of the column is not less than 2500, calculated with the reference to the peak of ferulic acid.

Reference solution Dissolve a quantity of ferulic acid CRS, weighed accurately, in methanol to produce a solution containing 0.15 mg per ml.

Test solution Weigh accurately 0.1 g of the coarse powder to a stopper centrifuge tube, accurately add 5 ml of methanol

and weigh. After standing overnight, ultrasonicate for 20 minutes and weigh again, replenish the loss of the solvent with methanol, centrifuge, filter the supernatant with the millipore film (0.45 μm).

Procedures Accurately inject 10 μl of each of the reference solution and the test solution, respectively, into the column, determine and calculate the content.

It contains not less than 0.050 per cent of ferulic acid ($C_{10}H_{10}O_4$), calculated with reference to the dried drug.

Processing Eliminate foreign matter, wash, soften thoroughly, cut into thick slices, and dry in the sun.

Action To relieve pain by dispelling *wind*, *cold* and *damp*.

Indications Pain at the top of the head in cold; rheumatic arthralgia.

Usage and dosage 3-9 g.

Storage Preserve in a cool and dry place, protected from moisture and moth.

Rhizoma et Radix Notopterygii (羌活, Qianghuo)

Incised Notopterygium Rhizome or Root

Incised Notopterygium Rhizome or Root is the dried rhizome and root of *Notopterygium incisum* Ting ex H. T. Chang or *Notopterygium forbesii* Boiss. (Fam. Umbelliferae). The drug is collected in spring and winter, removed from rootlet and soil, dried in the sun.

Description *Rhizome of Notopterygium incisum* Cylindrical and somewhat curved, 4-13 cm long, 0.6-2.5 cm in diameter. Apex with stem scars. Externally brown to blackish-brown, the place where the outer bark fallen off appearing yellow. Internodes shortened, forming dense raised annulations like a silkworm (known as Canqiang); or internodes elongated like the nodes of a bamboo (known as Zhujieqiang). Nodes exhibiting numerous dotted or tuberculate root scars and brown broken scales. Texture light and fragile, easily broken. Fracture uneven, with clefts, bark yellowish-brown to dark brown, oily, with numerous brown oil dots, wood yellowish-white with distinct rays, pith yellow to yellowish-brown. Odour, aromatic; taste, slightly bitter and pungent.

Rhizome and root of Notopterygium forbesii Rhizomes subcylindrical, bearing stems and remains of leaf sheaths. Root subconical, longitudinally wrinkled and lenticellate; externally brown, with dense annulations near rhizome, 8-15 cm long, 1-3 cm in diameter (known as Tiaoqiang). Some rhizomes large and stout, irregularly nodiform, apex bearing several stem bases, roots relatively thin (known as Datouqiang). Texture loose and fragile, easily broken. Fracture slightly even, bark pale brown, wood yellowish-white. Odour and teste relatively slight.

Extractives Carry out the hot extraction as described under the determination of ethanol-soluble extractives (Appendix X A), using ethanol as solvent, not less than 15.0 per cent.

Assay Carry out the method for determination of volatile oil (Appendix X D).

It contains not less than 2.8 per cent (m/g) of volatile oil.

Processing Eliminate foreign matter, wash clean, soften thoroughly, cut into thick slices, and dry in the sun.

Action To relieve pain and rheumatic condition.

Indications Headache in common cold, rheumatic arthralgia and aching of the back and shoulders.

Usage and dosage 3-9 g.

Storage Preserve in a cool and dry place, protected from moth.

Rhizoma et Radix Polygoni Cuspidati (虎杖, Huzhang)

Giant Knotweed Rhizome

Giant Knotweed Rhizome is the dried rhizome and root of *Polygonum cuspidatum* Sieb. et Zucc. (Fam. Polygonaceae). The drug is collected in spring or autumn, removed from the rootlet, washed clean, cut into short section or thick slice when fresh, and dried in the sun.

Description Mostly in cylindrical short sections or irregular thick slices, 1-7 cm long, 0.5-2.5 cm in diameter. Externally brown, showing longitudinal wrinkles and rootlet scars. In transversely cut surface, bark relatively thin, wood broad, brownish-yellow with radial rays, bark easily separated from wood. Pith in a rhizome septated or hollowed. Texture hard. Odour, slight; taste, slightly bitter and astringent.

Identification To 0.1 g of the powder add 10 ml of methanol, ultrasonicate for 15 minutes and filter. Evaporate the filtrate to dryness, dissolve the residue in 5 ml of sulfuric acid (2.5 mol/L), heat under reflux for 30 minutes and cool. Extract by shaking with two 5-ml quantities of chloroform, combine the chloroform extracts and evaporate to dryness. Dissolve the residue in 1 ml of chloroform as the test solution. Prepare a solution of 0.1 g of Rhizoma Polygoni Cuspidati reference drug in the same manner as the reference drug solution. Dissolve a quantity of emodin CRS and physcion CRS in methanol to produce a mixture containing 1 mg of each per ml as the reference solution. Carry out the method for thin layer chromatography (Appendix VI B), using silica gel G as the coating substance and the upper layer of a mixture of petroleum ether (30-60℃), ethyl formate and formic acid (15 : 5 : 1) as the mobile phase. Apply separately to the plate 4 μl of each of the test solution and the reference drug solution, 1 μl of the reference solution. After developing and removal of the plate, dry in air. Examine under ultraviolet light at 365 nm. The fluorescent spots in the chromatogram obtained with the test solution correspond in position and colour to the spots in the chromatogram obtained with the reference drug solution and the reference solution, and the colour of the spots turn to red on exposure to ammonia vapour.

Water Carry out the method for determination of water (Appendix IX H, method 1), not more than 12.0 per cent.

Total ash Not more than 5.0 per cent (Appendix IX K).

Acid-insoluble ash Not more than 1.0 per cent (Appendix IX K).

Extractives Carry out the method for determination of ethanol-soluble extractives (Appendix X A, the cold maceration method), using ethanol as the solvent, not less than 9.0 per cent.

Assay Emodin Carry out the method for high performance liquid chromatography (Appendix VI D).

Chromatographic system and system suitability Use

octadecylsilane bonded silica gel as the stationary phase and a mixture of methanol and 0.1% phosphoric acid (80 : 20) as the mobile phase. As detector a spectrophotometer set at 254 nm. The number of theoretical plates of the column is not less than 3000, calculated with the reference to the peak of emodin.

Reference solution Weigh accurately a quantity of emodin CRS, dried over phosphorous pentoxide in vacuum for 24 hours, dissolve in methanol to produce a solution containing 48 μg per ml.

Test solution Weigh accurately 0.1 g of the powder (through No. 3 sieve) to a stopper conical flask, accurately add 25 ml of chloroform and 20 ml of sulfuric acid (2.5 mol/L), and weigh. Heat under reflux on a water bath at 80℃ for 2 hours, cool and weigh again, replenish the loss of solvent with chloroform and mix well. Separate the chloroform layer and evaporate accurately 10 ml to dryness. Dissolve the residue in methanol, transfer to a 10 ml volumetric flask, dilute to volume with methanol, mix well, filter through the millipore film (0.45 μm) and use the successive filtrate as the test solution.

Procedure Accurately inject 5 μl of each of the reference solution and the test solution, respectively, into the column, and calculate the content.
It contains not less than 0.60 per cent of emodin ($C_{15}H_{10}O_5$), calculated with reference to the dried drug.

Polydatin Operate protected from light. Carry out the method for high performance liquid chromatography (Appendix Ⅵ D).

Chromatographic system and system suitability Use octadecylsilane bonded silica gel as the stationary phase and a mixture of acetonitrile and water (23 : 77) as the mobile phase. As detector a spectrophotometer set at 306 nm. The number of theoretical plates of the column is not less than 3000, calculated with the reference to the peak of polydatin.

Reference solution Weigh accurately a quantity of polydatin CRS, dried over phosphorous pentoxide in vaccum for 24 hours, dissolve in dilute ethanol to produce a solution containing 15 μg per ml.

Test solution Weigh accurately 0.1 g of the powder (through No. 3 sieve), add accurately 25 ml of dilute ethanol and weigh, heat under reflux for 30 minutes, cool and weigh again, replenish the loss of solvent with dilute ethanol and mix well. Filter the supernatant through millipore (0.45 μm), use the successive filtrate as the test solution.

Procedure Inject accurately 10 μl of each of the reference solution and the test solution, respectively, into the column, and calculate the content.
It contains not less than 0.15 per cent of polydatin ($C_{20}H_{22}O_8$), calculated with reference to the dried drug.

Processing Eliminate foreign matter, wash clean, soften thoroughly, cut into thick slices, and dry.

Action To dispel *wind* and *damp*, eliminate blood stasis and alleviate pain, relieve cough, and resolve phlegm.

Indications Arthralgia; jaundice caused by *damp-heat*; amenorrhea; mass formation in the abdomen; cough with profuse expectoration; scalds and burns; traumatic injuries; carbuncles and sores.

Usage and dosage 9-15 g; for external use, appropriate quantity is made into decoction or ointment and applied topically.

Precaution Used with caution in pregnancy.

Storage Preserve in a dry place, protected from mould and moth.

Rhizoma Fagopyri Dibotryis (金荞麦, Jinqiaomai)

Golden Buckwheat Rhizome

Golden Buckwheat Rhizome is the dried rhizome of *Fagopyrum dibotrys* (D. Don) Hara (Fam. Polygonaceae). The drug is collected in winter, removed from stem and rootlet, washed clean, and dried.

Description In irregular masses or cylindrical, mostly with tubercular branches, sometimes with remains of stems at apex, 3-15 cm long, 1-4 cm in diameter. Externally brown, with transverse annulated-nodes and longitudinal wrinkles, scattered with numerous dotted lenticels, and showing dent and rounded root scars and remains of rootlets. Texture hard and uneasily broken, facture pale yellowish-white or pale brownish-red, radiately striated. Pith in the centre deeper in colour. Odour, slight; taste, slightly astringent.

Indetification (1) Powder: Brownish. Starch granules fairly abundant, simple granules subspheroidal, ellipsoid or ovoid, 5-48 μm in diameter, hilum pointed, stellate, slit-shaped or V-shaped, situated in the centre or close to an end, the larger granules showing striations; compound granules of 2-4 components; semi-compound granules visible. Xylem fibres in bundles, 10-38 μm in diameter, with simple oblique or cross pits. Clusters of calcium oxalate 10-62 μm in diameter. Parenchymatous cells in xylem subsquare or elliptical, 28-37 μm in diameter, up to 100 μm long, walls about 5 μm in thickness, lumina sparsely pitted. Bordered pitted vessels and reticulated vessels, 21-83 μm in diameter.
(2) To 2.5 g of the powder add 20 ml of methanol, stand for 1 hour, then heat under reflux for 1 hour, cool and filter, evaporate the filtrate to about 5 ml as the test solution. Prepare a solution of 1 g of Rhizoma Fagopyri Dibotryis reference drug in the same manner as the reference drug solution. Carry out the method for thin layer chromatography (Appendix Ⅵ B), using silica gel G as the coating substance and a mixture of toluene, ethyl acetate, methanol and formic acid (1 : 2 : 0.2 : 0.1) as the mobile phase. Apply separately to the plate 5-10 μl of the test solution and 5 μl of the reference drug solution. After developing and removal of the plate, dry in air. Spray with a 25% solution of phosphomolybdic acid in ethanol, heat at 110℃ to the spots clear. The spots in the chromatogram obtained with the test solution correspond in position and colour to the spots in the chromatogram obtained with the reference drug solution.

Water Carry out the method for determination of water (Appendix Ⅸ H, method 1), not more than 15.0 per cent.

Total ash Not more than 5.0 per cent (Appendix Ⅸ K).

Extractives Carry out the method for determination of ethanol-soluble extractives (Appendix Ⅹ A, the hot extraction method), using dilute ethanol as the solvent, not less than 14.0 per cent.

Processing Eliminate foreign matter, wash clean, soften thoroughly, cut into thick slices, and dry.

Action To remove *toxic-heat*, promote the discharge of pus and remove blood stasis.

Indications Lung abscess, measles, pneumonia, tonsilar peripheral abscess.

Usage and dosage 15-45 g, mixed with water or yellow wine, and simmered in an airtight container with steam for oral use.

Storage Preserve in a dry place, protected from mould and moth.

Rhizoma Gastrodiae (天麻, Tianma)

Tall Gastrodia Tuber

Tall Gastrodia Tuber is the dried tuber of *Gastrodia elata* Bl. (Fam. Orchidaceae). The drug is collected from winter to next spring, washed clean immediately, steamed thoroughly, spread out and dried at a lower temperature.

Description Ellipsoid or slat-shaped, slightly compressed, shrunken and somewhat curved, 3-15 cm long, 1.5-6 cm wide, 0.5-2 cm thick. Externally yellowish-white to pale yellowish-brown, with longitudinal wrinkles and many transverse annulations arranged by latent buds, sometimes brown funiculi visible. Apex with reddish-brown to deep brown parrot-beak-like buds or remains of stem; the lower end with a rounded scar. Texture hard and uneasily broken, fracture fairly even, yellowish-white to brownish, horny. Odour, slight; taste, sweetish.

Identification (1) Transverse section: Remains of epidermis present, hypodermis of 2-3 rows of suberized and tangentially elongated cells. Cortex consisting of over 10 rows of polygonal cells, some containing raphides of calcium oxalate. In older tubers 2-3 rows of elliptical sclerenchymatous cells present in cortex adjacent to hypodermis, with lignified and obviously pitted walls. Stele occupied the most part of rhizome, scattered small amphicribral vascular bundles, parenchymatous cells containing raphides of calcium oxalate. Powder: Yellowish-white to yellowish brown. Sclerenchymatous cells elliptical or subpolygonal, 70-180 μm in diameter, walls 3-8 μm in thickness, lignified, distinctly pitted. Needle crystals of calcium oxalate in bundles or scattered, 25-75 (93) μm long. When mounted in Smith's starch reagent, parenchymatous cells containing gelatinized polysaccharides colourless, and some cells containing long-ovoid, long-ellipsoid or subrounded granules, showing a brown or brownish-purple colour on adding iodine solution. Spiral, reticulated and annual vessels 8-30 μm in diameter.

(2) To 0.5 g of the powder, add 5 ml of 70% methanol, ultrasonicate for 30 minutes, filter and use the filtrate as the test solution. Prepare a solution of 0.5 g of Rhizoma Gastrodiae reference drug in the same manner as the reference drug solution. Dissolve gastrodin CRS in methanol to produce a solution containing 1 mg per ml as the reference solution. Carry out the method for thin layer chromatography (Appendix VI B), using silica gel G as the coating substance and a mixture of ethyl acetate, methanol and water (9 : 1 : 0.2) as the mobile phase. Apply separately to the plate 10 μl of the test solution and 5 μl of the reference drug solution and reference solution. After developing and removal of the plate, dry in air, spray with a 10% solution of phosphomolybdic acid in ethanol and heat at 105℃ to the spots clear. The spots in the chromatogram obtained with the test solution correspond in position and colour to the spots obtained with the reference drug solution and the reference solution.

Water Carry out the method for determination of water (Appendix IX H, method 1), not more than 15.0 per cent.

Total ash Not more than 4.5 per cent (Appendix IX K).

Assay Carry out the method for high performance liquid chromatography (Appendix VI D).

Chromatographic system and system suitability Use octadecylsilane bonded silica gel as the stationary phase and a mixture of acetonitrile and 0.05% solution of phosphoric acid (3 : 97) as the mobile phase. As detector a spectrophotometer set at 220 nm. The number of theoretical plates of the column is not less than 5000, calculated with the reference to the peak of gastrodin.

Reference solution Weigh accurately a quantity of gastrodin CRS, previously dried at 80℃ for 1 hour under reduced pressure, dissolve in mobile phase to produce a solution containing 50 μg per ml.

Test solution Weigh accurately 0.8 g of the powder (through No. 4 sieve), previously dried at 80℃ under reduced pressure, to a stopper conical flask, add accurately 50 ml of dilute ethanol and weigh. Heat under reflux on a water bath for 3 hours, cool and weigh again, replenish the loss of solvent with dilute ethanol, mix well and filter. Evaporate accurately 10 ml of the successive filtrate nearly to dryness. Dissolve the residue in a mixture of acetonitrile and water (3 : 97), transfer to a 10 ml volumetric flask, dilute with the same solution to volume and mix well.

Procedure Inject accurately 10 μl of the reference solution and 5-10 μl of the test solution, respectively, into the column, and calculate the content.

It contains not less than 0.20 per cent of gastrodin ($C_{13}H_{18}O_7$), calculated with reference to the dried drug.

Processing Wash clean, soften thoroughly or steam to soften, cut into thin slices, and dry.

Action To subdue the *liver-wind* and arrest convulsion.

Indications Headache, dizziness and numbness of the limbs; infantile convulsion; epilepsy; tetanus.

Usage and dosage 3-9 g.

Storage Preserve in a ventilated and dry place, protected from moth.

Rhizoma Homalomenae (千年健, Qiannianjian)

Obscured Homalomena Rhizome

Obscured Homalomena Rhizome is the dried rhizome of *Homalomena occulta* (Lour.) Schott (Fam. Araceae). The drug is collected in spring and autumn, washed clean, removed from the external bark, and dried in the sun.

Description Cylindrical, somewhat curved, sometimes slightly compressed, 15-40 cm long, 0.8-1.5 cm in diameter. Externally yellowish-brown to reddish-brown, rough, mostly twisted longitudinal fissures, rounded root scars and yellow needle-shaped fibre bundles visible. Texture hard and fragile, fracture reddish-brown, with numerous and distinct yellow needle-shaped fibre bundles; the other fracture with numerous pin-hole-like pores and a few yellow needle-shaped fibre bundles, showing lustrous dark brown oil dots. Odour, aromatic; taste, pungent and slight bitter.

Identification (1) Transverse section: Some cork cells remained, brown. Ground tissue scattered with large secretory cavities formed by several layers of cork cells; most secretory cells present in the outer side, containing yellow to brown secretion. Mucilage cells relatively large, containing raphides of

calcium oxalate; clusters of calcium oxalate scattered; vascular bundles collateral and amphivasal, scattered throughout. Collateral bundles usually accompanied by fibre bundles outside, isolated fibre bundle rarely found, fibre walls thickened and lignified.
(2) To 1 g of the powder add 5 ml of ether, allow to stand for 30 minutes with frequently shaking, and filter. Transfer 1 ml of the filtrate to an evaporating dish, and expel the ether. Add 1-2 drops of 1% solution of vanillin in sulfuric acid to the residue; a purplish-red or purple colour is produced.

Processing Eliminate foreign matter, wash clean, soften thoroughly, cut into slices, and dry in the sun.

Action To relieve rheumatic condition and strengthen the tendons and bones.

Indications Rheumatoid arthritis with pain and cold sensation in the loins and knees, muscular contracture and numbness of the lower extremities.

Usage and dosage 4.5-9 g.

Storage Preserve in a cool and dry place.

Rhizoma Imperatae (白茅根, Baimaogen)

Lalang Grass Rhizome

Lalang Grass Rhizome is the dried rhizome of *Imperata cylindrica* Beauv. var. *major* (Nees) C. E. Hubb. (Fam. Gramineae). The drug is collected in spring or autumn, washed clean, dried in the sun, removed from fibrous root and membranous leaf sheath, and tied up in small bundle.

Description Long cylindrical, 30-60 cm long, 2-4 mm in diameter. Externally yellowish-white or yellowish, slightly lustrous, longitudinally wrinkled, nodes distinct and slightly raised, internodes varying in length, usually 1.5-3 cm long. Texture light, somewhat fragile, fracture white in bark, mostly with cracks arranged radially, stele yellowish, easily stripped from cortex. Odour, slight; taste, slightly sweetish.

Identification (1) Heat under reflux 5 g of the coarse powder with 30 ml of benzene for 1 hour, filter. Evaporate 5 ml of the filtrate to dryness, dissolve the residue in 1 ml of acetic anhydride, then add 1-2 drops of sulfuric acid; a red colour is produced, which gradually turns to violet-red, bluish-violet and dirty green colour at last.
(2) Boil 1 g of the coarse powder with 10 ml of water for 5-10 minutes, filter and concentrate the filtrate to 1 ml, add 1 ml of alkaline cupric tartarate TS, heat on a water bath; a brownish-red precipitate is produced.

Total ash Not more than 5.0 per cent (Appendix Ⅸ K).

Processing *Rhizoma Imperatae* Wash clean, soften briefly, cut into sections, dry, and sift.

Rhizoma Imperatae (carbonized) Stir-bake the sections of Rhizoma Imperatae as described under the method for carbonizing by stir-baking (Appendix Ⅱ D) until it becomes charred brown.

Action To arrest bleeding by reducing *heat* in blood, remove *heat*, and cause urination.

Indications Haematemesis, epistaxis and hematuria due to *heat* in the blood; febrile diseases with thirst; jaundice; urinary infection with difficult painful urination; edema in acute nephritis.

Usage and dosage 9-30 g; 30-60 g of the fresh rhizome.

Storage Preserve in a dry place.

Rhizoma Iridis Tectori (川射干, Chuanshegan)

Roof Iris Rhizome

Roof Iris Rhizome is the dried rhizome of *Iris tectorum* Maxim. (Fam. Iridaceae). The drug can be collected all the year round, removed from fibrous root and soil, and dried.

Description Irregular slug-like or conical, slightly flat, branched, 3-10 cm long, 1-2.5 cm in diameter. Externally greyish-yellowish brown or brown, with annular rings and longitudinal furrows, often bearing remains of thin roots and depressed or dotted protuberant root scars. Texture lax and fragile, easily broken, fracture yellowish-white or yellowish-brown. Odour slight, taste sweet and bitter.

Identification (1) Powder: Pale yellowish. Prisms of calcium oxalate relatively abundant, mostly broken, the intact ones 15-82 μm long (maximum 300 μm), 16-52 μm in diameter. Parenchymatous cells subrounded or ellipsoidal, walls slightly thickened or beaded, with simple pits. Cork cells polygonal in surface view, walls thin and slightly sinuous, some containing brown contents.
(2) To 1 g of the powder add 10 ml of methanol, ultrasonicate for 30 minutes, filter, concentrate the filtrate to about 1 ml as the test solution. Prepare a solution of 1 g of Rhizoma Iridis Tectori reference drug in the same manner as the reference drug solution. Dissolve belamcandin CRS in methanol to produce a solution containing 0.5 mg per ml as the reference solution. Carry out the method for thin layer chromatography (Appendix Ⅵ B), using polyamide film G as the coating substance and a mixture of chloroform, butanone and methanol (3∶1∶1) as the mobile phase. Apply separately to the plate 1 μl of each of the above three solutions. After developing and removal of the plate, dry in air, spray with aluminum chloride TS, examine under ultraviolet light at 365 nm. The fluorescent spots in the chromatogram obtained with the test solution correspond in position and colour to the spots in the chromatogram obtained with the reference drug solution and the reference solution.

Water Carry out the method for the determination of water (Appendix Ⅸ H, Method 1), not more than 15.0 per cent.

Total ash Not more than 7.0 per cent (Appendix Ⅸ K).

Acid-insoluble ash Not more than 1.0 per cent (Appendix Ⅸ K).

Extractives Carry out the hot extraction method as described under the determination of ethanol-soluble extractives (Appendix Ⅹ A), using ethanol as the solvent, not less than 24.0 per cent.

Assay Carry out the method for high performance liquid chromatography (Appendix Ⅵ D).

Chromatographic system and system suitability Use octadecylsilane bonded silica gel as the stationary phase and a mixture of methanol and 0.05 mol/L potassium dihydrogen phosphate solution (adjust the value of pH to 3.0 with phosphoric acid) (32∶68) as the mobile phase. As detector a spectrophotometer set at 265 nm. The number of theoretical plates of the column is not less than 2500, calculated with the reference to the peak of belamcandin.

Reference solution Dissolve a quantity of belamcandin CRS,

weighed accurately, in 70% ethanol to produce a solution containing 0.02 mg per ml as reference solution.

Test solution Weigh accurately 0.5 g of the powder (through No. 3 sieve) to a stoppered conical flask, accurately add 25 ml of 70% ethanol, tightly stopper and weigh. Ultrasonicate (power, 250 W; frequency, 50 kHz) for 1 hour, cool, and weigh again, replenish the loss of the solvent with 70% ethanol and mix well. Filter, measure accurately 1 ml of successive filtrate to a 50 ml volumetric flask, dilute to volume with 70% ethanol, and mix well.

Procedures Inject accurately 10 μl of each of the reference solution and the test solution respectively, into the column, determine and calculate the content.
It contains not less than 3.6 per cent of belamcandin ($C_{22}H_{24}O_{11}$), calculated with reference to the dried drug.

Processing Eliminate foreign matter, wash clean, soften thoroughly, cut into thin slices, and dry.

Action To clear *toxic-heat*, resolve *phlegm* and ease the throat.

Indications Swollen and painful throat, cough and shortness of breath with phlegm.

Usage and dosage 6-10 g.

Storage Preserve in a dry place.

Rhizoma Kaempferiae (山柰, Shannai)

Galanga Resurrectionlily Rhizome

Galanga Resurrectionlily Rhizome is the dried rhizome of *Kaempferia galanga* L. (Fam. Zingiberaceae). The drug is collected in winter, washed clean, removed from rootlet, sliced and dried in the sun.

Description Mostly in rounded or subrounded transverse cut slices, 1-2 cm in diameter, 3-5 mm thick. Externally brownish or yellowish-brown, shrunken, some with root scars or remains of rootlets; transversely cut surface whitish, starchy, usually inflated. Texture fragile, easily broken. Odour, aromatic and characteristic; taste, pungent.

Identification (1) Powder: Yellowish-white. Starch granules abundant, mainly simple, spheroid, ellipsoidal or subtriangular, mostly flattened, 5-30 μm in diameter, hilum and striations indistinct. Oil cells subrounded or elliptical, 40-130 μm in diameter, rather thin-walled, the lumen containing yellowish-green or purplish-red oil drops. Spiral vessels 18-37 μm in diameter. Coloured masses irregular, yellow or yellowish-brown.
(2) To 0.25 g of the powder add 5 ml of methanol, ultrasonicate for 10 minutes, filter and use the filtrate as the test solution. Dissolve a quantity of ethyl *p*-methoxycinnamate CRS in methanol to produce a solution of 5 mg per ml as the reference soution. Carry out the method for thin layer chromatography (Appendix VI B), using silica gel GF_{254} as the coating substance and *n*-hexane and ethyl acetate (18 : 1) as the mobile phase. Apply separately to the plate 2 μl of each of the two solutions. After developing and removal of the plate, dry in air, and examine under ultraviolet light at 254 nm. The spot in the chromatogram obtained with the test solution corresponds in position and colour to the spot in the chromatogram obtained with the reference solution.

Assay Carry out the method for determination of volatile oil (Appendix X D).
It contains not less than 4.5 per cent (ml/g) of volatile oil.

Action To stimulate the functional activity of the stomach, promote digestion and relieve pain.

Indications Dyspepsia accompanied with epigastric distension, pain and cold feeling.

Usage and dosage 6-9 g.

Storage Preserve in a cool and dry place.

Rhizoma Menispermi (北豆根, Beidougen)

Asiatic Moonseed Rhizome

Asiatic Moonseed Rhizome is the dried rhizome of *Menispermum dauricum* DC. (Fam. Menispermaceae). The drug is collected in spring or autumn, removed from rootlet and soil, and dried.

Description Slenderly cylindrical, tortuous and branched, up to 50 cm long, 3-8 mm in diameter. Externally yellowish-brown to dark brown, mostly bearing numerous curved rootlets, and exhibiting prominent rootlet scars and longitudinal wrinkles, the outer layers easily exfoliated. Texture tenacious, uneasily broken, fracture uneven and fibrous, wood yellowish, arranged radially, medullated. Odour, slight; taste bitter.

Identification (1) Transverse section: Epidermal cells 1-layered, with a brownish-yellow cuticle at the outside, cork of several layers of cells. Cortex relatively broad, scattered with stone cells in the old rhizome. Pericyclic fibres arranged to be crescent. Vascular bundles collateral, ringed. Interfascicular cambium indistinct. Xylem consisting of vessels, tracheids, wood fibres and parenchymatous cells, all of them lignified. Medullated. Parenchymatous cells containing starch granules and minute crystals of calcium oxalate.
Powder: Pale brownish-yellow. Stone cells single and scattered throughout, pale yellowish, branched or irregular, 43-147 (200) μm in diameter, with a large lumen. Pericyclic fibres mostly bundled, pale yellowish, 18-34 μm in diameter, septate. Wood fibres in bundles, 10-26 μm in diameter, the walls obliquely pitted or cross-pitted. Bordered pitted vessels. Crystals of calcium oxalate minute. Starch granules about 1 μm in diameter.
(2) To 0.5 g of the powder, add 15 ml of ethyl acetate and 0.5 ml of strong ammonia TS, heat under reflux for 30 minutes and filter. Evaporate the filtrate to dryness and dissolve the residue in 1 ml of ethyl acetate as the test solution. Prepare a solution of 0.5 g of Rhizoma Menispermi reference drug in the same manner as the reference drug solution. Carry out the method for thin layer chromatography (Appendix VI B), using silica gel G mixed with sodium carboxymethylcellulose as the coating substance and a mixture of chloroform, methanol and strong ammonia TS (9 : 1 : 1 drop) as the mobile phase. Apply separately to the plate 2 μl of the above two solutions. After developing and removal of the plate, dry in air. Spray with potassium iodobismuthate TS. The spots in the chromatogram obtained with the test solution correspond in position and colour to the spots in the chromatogram obtained with the reference drug solution.

Foreign matter Not more than 5 per cent (Appendix IX A).

Water Carry out the method for determination of water (Appendix IX H, method 1), not more than 12.0 per cent.

Total ash Not more than 7.0 per cent (Appendix Ⅸ K).

Acid-insoluble ash Not more than 2.0 per cent (Appendix Ⅸ K).

Processing Eliminate foreign matter, wash clean, soften thoroughly, cut into thick slices, and dry.

Action To remove *toxic-heat* and relieve rheumatic pain.

Indications Sore throat, colitis, dysentery, rheumatic arthralgia.

Usage and dosage 3-9 g.

Storage Preserve in a dry place.

Preparation Asiatic Moonseed Tablets

Rhizoma Panacis Japonici (竹节参, Zhujieshen)

Japanese Ginseng

Japanese Ginseng is the dried rhizome of *Panax japonicus* C. A. Mey. (Fam. Araliaceae). The drug is collected in autumn, removed from the main root, peeled, and dried.

Description Slightly cylindrical, somewhat curved, some with fleshy laternal roots, 5-22 cm long, 0.8-2.5 cm in diameter. Externally yellow or yellowish-brown, rough, with dense transverse wrinkles and root scars. Nodes conspicuous, internodes 0.8-2 cm long, each showing a dented stem scar. Texture hard, fracture yellowish-white to pale yellowish-brown, showing yellow dotted vascular bundles arranged in a ring. Odour, slight; taste, bitterish and then slightly sweet.

Identification (1) Transverse section: Cork consisting of 2-10 layers of cells. Phelloderm slightly broad, scattered with secretory canals. Vascular bundles collateral, circularly arranged. Cambium in a ring. In phloem secretory canals found occasionally. Xylem bundles somewhat in 2-4 strands arranged radially or in a row, woody fibres usually in 1-4 bundles, some accompanied by larger, lignified sclerenchymatous cells. Pith visible. Parenchymatous cells containing abundant clusters of calcium oxalate, 17-70 μm in diameter, and starch granules.
Powder: Yellowish-white to yellowish-brown. Woody fibres in bundles, about 25 μm in diameter, walls slightly thickened, pits oblique cleft-like, some crisscrossed to be V-shaped. Clusters of calcium oxalate numerous, 15-70 μm in diameter. Vessels scalariform, reticulated or bordered pitted, 20-70 μm in diameter. Resin-canal pieces occasionally found, containing yellow masses. Cork cells polygonal, rectangular or irregular, walls thickened. Starch granules abundant, mainly simple, subrounded, about 10 μm in diameter, or gelatinized.
(2) Mix well 1 g of the powder with 5-10 drops of water, add 10 ml of *n*-butanol saturated with water, stopper closely, shake for about 10 minutes, stand overnight, filter, evaporate the filtrate to dryness, heat the residue under reflux with 10 ml of a mixture of surfuric acid and 30% ethanol (1→20) for 2 hours, extract with chloroform by shaking, wash the chloroform solution with 10 ml of water and discard the washings. Evaporate the chloroform solution to dryness, dissolve the residue in 1 ml of methanol as the test solution. Dissolve oleanolic acid CRS, panaxadiol CRS and panaxatriol CRS in methanol to produce three solutions, containing 2 mg of oleanolic acid per ml and 0.5 mg of panaxadiol and panaxatriol per ml respectively, as the reference solutions. Carry out the method for thin layer chromatography (Appendix Ⅵ B), using silica gel G as the coating substance and a mixture of benzene and ethyl acetate (1∶1) as the mobile phase. Apply separately to the plate 5 μl of the test solution and 1 μl of each of the reference solutions. After developing and removal of the plate, dry in air, spray with 10% solution of surfuric acid in ethanol, heat at 105℃ until the spots clear. The spots in the chromatogram obtained with the test solution correspond in position and colour to the spots in the chromatogram obtained with the reference solutions.

Processing Eliminate foreign matter, pound to pieces before use.

Action To strengthen the constitution, eliminate blood stasis and relieve pain, arrest bleeding, and promote expectoration.

Indications General weakness after disease; consumptive cough with hemoptysis, cough with profuse sputum; traumatic injuries.

Usage and dosage 6-9 g.

Storage Preserve in a ventilated place, protected from moth.

Rhizoma Panacis Majoris (珠子参, Zhuzishen)

Largeleaf Japanese Ginseng Rhizome

Largeleaf Japanese Ginseng Rhizome is the dried rhizome of *Panax japonicus* C. A. Mey. var. *major* (Burk.) C. Y. Wu et K. M. Feng or *Panax japonicus* C. A. Mey. var. *bipinnatifidus* (Seem.) C. Y. Wu et K. M. Feng (Fam. Araliaceae). The drug is collected in autumn, removed from rough bark and rootlet, and dried, or dried after steamed (boiled) thoroughly.

Description Slightly spheroidal, conical or irregularly rhombic, occasionally beaded, 0.5-2.8 cm in diameter. Externally brownish-yellow or yellowish-brown, with distinct warty protrudings and wrinkles, occasionally with rounded sunken stem scars, sometimes remaining fine internodes laterally or bilaterally. Texture hard, fracture uneven, pale yellowish-white, starchy. Odour, slight; taste, bitter and slightly sweet with irritating sensation.
Steamed (or boiled) rhizomes: Fracture yellowish-white or yellowish-brown, slightly horny. Taste, slightly sweet and bitter, not irritating on chewing.

Identification (1) Transverse section: Cork consisting of several layers of cells. Cortex slightly narrow with rounded or oblong secretory ducts, 32-500 μm in diameter, surrounded by 5-18 secretory cells. Secretory ducts in phloem relatively small. Cambium ring interrupted. Xylem vessels subpolygonal, up to 76 μm in diameter, arranged radially or in V-shape, rays wide. Pith in centre. Parenchymatous cells containing starch granules and some containing clusters of calcium oxalate.
(2) Macerate 1 g of the powder in 10 ml of water overnight, then warm for 10 minutes and filter immediately. Transfer 1 ml of the filtrate to two test tubes with stopper respectively. Add 2 ml of sodium hydroxide TS to one tube and 2 ml of hydrochloric acid solution (1→20) to another, shake vigorously for 1 minute. The height of the foams produced in the acid tube is two times as high as that in the alkali tube.
(3) Shake 0.5 g of the powder with 5 ml of ethanol for 30 minutes and filter. Evaporate the filtrate to dryness, add

dropwise a saturate solution of antimony chloride in chloroform, evaporate to dryness again; a purple colour is produced.

(4) To 1 g of the powder add 5-10 drops of water, stir well. Add 10 ml of *n*-butanol solution saturated with water, stopper tightly, shake for about 10 minutes and allow to stand overnight, filter and evaporate the filtrate to dryness. To the residue, add 10 ml of a mixture of sulfuric acid and 30% ethanol (1→20), heat under reflux for 2 hours and extract with 20 ml of chloroform. Wash the chloroform extract with 10 ml of water (centrifuge if necessary), discard the washing, evaporate the chloroform extract to dryness. Dissolve the residue in 1 ml of methanol as the test solution. Dissolve oleanolic acid CRS and panaxadiol CRS in methanol to produce a mixture containing 1.5 mg of oleanolic acid CRS and 0.5 mg of panaxadiol CRS per ml as the reference solution. Carry out the method for thin layer chromatography (Appendix Ⅵ B), using silica gel G as the coating substance and benzene and ethyl acetate (1 : 1) as the mobile phase. Apply separately to the plate 10 μl of each of the above two solutions. After developing and removal of the plate, dry in air, spary with sulfuric acid solution (1→10), heat at 105℃ to the spots clear, and examine under ultraviolet light at 365 nm. The fluorescent spots in the chromatogram obtained with the test solution correspond in position and colour to the spots in the chromatogram obtained with the reference solution.

Processing Eliminate foreign matter, pound to pieces before use.

Action To nourish *yin* and replenish the lung, promote the flow of *qi* in *collaterals*, and to arrest bleeding.

Indications Deficiency of both *qi* and *yin* characterized by fever and thirst, cough in consumptive diseases; traumatic injuries, joint pain; hemoptysis, hematemesis, traumatic bleeding.

Usage and dosage 3-9 g; for external use, appropriate quantity is ground into powder and applied topically.

Storage Preserve in a dry place, protected from moth.

Rhizoma Paridis (重楼, Chonglou)

Paris Root

Paris Root is the dried rhizome of *Paris polyphylla* Smith var. *yunnanensis* (Franch.) Hand.-Mazz. or *Paris polyphylla* Smith var. *chinensis* (Franch.) Hara (Fam. Liliaceae). The drug is collected in autumn, removed from fibrous root, washed clean, and dried in the sun.

Description Nodular and flattened cylindrical, somewhat curved, 5-12 cm long, 1.0-4.5 cm in diameter. Externally yellowish-brown or greyish-brown and white where the outer bark fallen off; having densely lamellar and prominent annular striations. On one side showing distinct nodes with elliptic sunken scars of stems; on the other side showing sparsely rare fibrous roots or warty scars of fibrous roots. Scale leaves and remains of stems occurring at the apex. Texture hard, fracture smooth, white to pale brown, starchy or horny. Odour, slight; taste, slightly bitter and numb.

Identification (1) Powder: White. Starch granules numerous, subrounded, long elliptic or reniform, 3-18 μm in diameter. Needle crystals of calcium oxalate bundled or scattered, 80-250 μm long. Scalariform and reticulated vessels 10-25 μm in diameter.

(2) To 0.5 g of the powder add 10 ml of ethanol, heat under reflux for 30 minutes, filter and use the filtrate as the test solution. Prepare a solution of 0.5 g of Rhizoma Paridis reference drug in the same manner as the reference drug solution. Carry out the method for thin layer chromatography (Appendix Ⅵ B), using silica gel G as the coating substance and the lower layer of a mixture of chloroform, methanol and water (15 : 5 : 1) as the mobile phase. Apply separately to the plate 5 μl of each of the above two solutions and 10 μl of the reference solution obtained under Assay. After developing and removal of the plate, dry in air. Spray with a 10% solution of sulfuric acid in ethanol, heat at 105℃ to the spots clear. Examine in daylight and under ultraviolet light at 365 nm. The spots and the fluorescent spots in the chromatogram obtained with the test solution correspond in position and colour to the spots and the fluorescent spots obtained with the reference drug solution and the reference solution.

Water Carry out the method for determination of water (Appendix Ⅸ H, method 1), not more than 12.0 per cent.

Total ash Not more than 6.0 per cent (Appendix Ⅸ K).

Acid-insoluble ash Not more than 3.0 per cent (Appendix Ⅸ K).

Assay Carry out the method for high performance liquid chromatography (Appendix Ⅵ D).

Chromatographic system and system suitability Use octadecylsilane bonded silica gel as the stationary phase and a mixture of acetonitrile and water (42 : 58) as the mobile phase. As detector a spectrophotometer set at 210 nm. The number of theoretical plates of the column is not less than 4000, calculated with the reference to the peak of chonglou saponin Ⅰ.

Reference solution Weigh accurately a quantity of chonglou saponin Ⅰ CRS and chonglou saponin Ⅱ CRS, dissolve in methanol to produce a mixture containing 0.4 mg of each per ml.

Test solution Weigh accurately 0.5 g of the powder (through No. 3 sieve) to a stopper conical flask, add accurately 25 ml of ethanol and weigh. Ultrasonicate (power, 250 W; frequency, 33 kHz) for 30 minutes, cool and weigh again, replenish the loss of solvent with ethanol and mix well. Filter the supernatant with millipore film (0.45 μm), use the successive filtrate as the test solution.

Procedure Inject accurately 20 μl of each of the reference solution and the test solution, respectively, into the column, and calculate the content.

It contains not less than 0.80 per cent of the total amount of chonglou saponin Ⅰ ($C_{44}H_{70}O_{16}$), and chonglou saponin Ⅱ ($C_{51}H_{82}O_{20}$), calculated with reference to the dried drug.

Processing Eliminate foreign matter, wash clean, soften thoroughly, cut into thin slices, and dry in the sun.

Action To remove *heat*, counteract *toxicity*, cause the subsidence of swelling and alleviate pain, and relieve convulsion.

Indications Boils, carbuncles, sore throat, venomous snake bite, traumatic pain; convulsion.

Usage and dosage 3-9 g; for external use, appropriate quantity is ground into powder and applied after mixed with liquid.

Storage Preserve in a cool and dry place, protected from moth.

Rhizoma Phragmitis (芦根, Lugen)

Reed Rhizome

Reed Rhizome is the fresh or dried rhizome of *Phragmites communis* Trin. (Fam. Gramineae). The drug is collected all the year round, removed from bud, fibrous root and membranaceous leaf. It is used in fresh or dried in the sun.

Description *Rhizoma Phragmitis (fresh)* Long-cylindrical, some slightly compressed, varying in length, 1-2 cm in diameter. Externally yellowish-white, lustrous, the peel loose and exfoliated. Nodes annular, bearing remains of roots and bud scars. Texture light and tough, flexible, fracture yellowish-white, hollowed, walls 1-2 mm thick, showing small pores arranged in a ring. Odour, slight; taste, sweetish.

Rhizoma Phragmitis (dried) Compressed-cylindrical. Nodes relatively hard, internodes longitudinally wrinkled.

Identification To 1 g of the powder, add 10 ml of chloroform, ultrasonicate for 20 minutes and filter, use the filtrate as the test solution. Prepare a solution of 1 g of Rhizoma Phragmitis reference drug in the same manner as the reference drug solution. Carry out the method for thin layer chromatography (Appendix Ⅵ B), using silica gel G mixed with sodium carboxymethylcellulose as the coating substance and the upper layer of a mixture of petroleum ether (30-60℃), formic acetate and formic acid (15 : 5 : 1) as the mobile phase. Apply separately 10 μl of each of the above two solutions to the plate. After developing and removal of the plate, dry in air, examine under ultraviolet light at 365 nm. The fluorescent spots in the chromatogram obtained with the test solution correspond in position and colour to the spots in the chromatogram obtained with the reference drug solution.

Processing Eliminate foreign matter, wash clean, cut into sections, or dry in the sun after cutting.

Action To remove *heat*, promote the production of body fluid, relieve emesis, and alleviate dysuria.

Indications Dire thirst in febrile diseases; vomiting or retching due to *heat* in the stomach; cough due to *heat* in the lung; lung abscess; urinary infection with difficult painful urination.

Usage and dosage 15-30 g; or 30-60 g of the fresh rhizome to be decocted or pounded for juice.

Storage Preserve in a dry place for the dried drug, or in wet sand for the fresh ones.

Rhizoma Picrorhizae (胡黄连, Huhuanglian)

Figwortflower Picrorhiza Rhizome

Figwortflower Picrorhiza Rhizome is the dried rhizome of *Picrorhiza scrophulariiflora* Pennell (Fam. Scrophulariaceae). The drug is collected in autumn, removed from fibrous root and soil, and dried in the sun.

Description Cylindrical, slightly tortuous, occasionally branched, 3-12 cm long, 0.3-1 cm in diameter. Externally greyish-brown to dark brown, rough, with dense ringed node, exhibiting slightly raised scars of buds and roots, closely covered with dark brown scaly remains of petioles at the upper part. Texture light, hard and fragile, easily broken, fracuture somewhat even, pale brown to dark brown, wood exhibiting 4-10 whitish dotted vascular bundles arranged in a ring. Odour, slight; taste, extremely bitter.

Identification (1) Sublime 0.5 g of the powder at 60-80℃ for 4 hours, examine under a microscope, needle crystals, needle-clusters, plates or cylindrical crystals and yellow spheroids are observed.

(2) Heat 5 g of the powder with 50 ml of water on a water bath at 60℃ for 20 minutes and filter. To 1 ml of the filtrate, add 2 drops of ferric chloride solution in ethanol, a dark green precipitate is produced. To another 1 ml of the filtrate, add 2 drops of 5% solution of α-naphthol in ethanol, mix well, a yellowish-white turbidness is produced. Along the tube wall add 0.5 ml of sulfuric acid slowly, a violet ring is shown at the junction of the two liquids, the colour darkens on shaking and a deep violet precipitate is produced on diluting with water.

(3) Dissolve the sublimate obtained under Identification test (1) with several drops of chloroform as the test solution. Dissolve cinnamic acid CRS and vanillic acid CRS in chloroform to produce a mixture containing 1 mg of each per ml as the reference solution. Carry out the method for thin layer chromatography (Appendix Ⅵ B), using silica gel GF_{254} as the coating substance and a mixture of *n*-hexane, ether and glacial acetic acid (5 : 5 : 0.1) as the mobile phase. Apply separately to the plate 5 μl of each of the above two solutions. After developing and removal of the plate, dry in air, and examine under ultraviolet light at 254 nm. The spots in the chromatogram obtained with the test solution correspond in position and colour to the spots in the chromatogram obtained with the reference solution.

Water Carry out the determination of water (Appendix Ⅸ H, method 1). Not more than 13.0 per cent.

Total ash Not more than 7.0 per cent (Appendix Ⅸ K).

Acid-insoluble ash Not more than 3.0 per cent (Appendix Ⅸ K).

Extractives Carry out the method for determination of ethanol-soluble extractives (Appendix Ⅹ A, the hot extraction method), using ethanol as the solvent, not less than 30.0 per cent.

Assay Carry out the method for high performance liquid chromatography (Appendix Ⅵ D)

Chromatographic system and system suitability Use octadecylsilane bonded silica gel as the stationary phase and a mixture of methanol, water and phosphoric acid (35 : 65 : 0.1) as the mobile phase. As detector a spectrophotometer set at 275 nm. The number of theoretical plates of the column is not less than 3000, calculated with the reference to the peak of picroside Ⅱ.

Reference solution Weigh accurately 10 mg of picroside Ⅰ CRS and picroside Ⅱ CRS, respectively, dissolve in methanol in a 50 ml volumetric flask, dilute with methanol to volume. Measure accurately 1 ml in a 5 ml volumetric flask, dilute with methanol to volume to produce a mixture containing 40 μg of each per ml, and mix well.

Test solution Weigh accurately 0.1 g of the powder (through No. 3 sieve) to a stopper conical flask, accurately add 50 ml of methanol, stopper tightly and weigh. Ultrasonicate (power, 250 W; frequency, 33 kHz) for 30 minutes, cool and weigh again, replenish the loss of the weight with methanol, mix well and filter. Measure accurately 1 ml of the successive filtrate in a 5 ml volumetric flask, dilute with

methanol to volume, and mix well.

Procedure Accurately inject 10 μl of each of the reference solution and the test solution, respectively, into the column, and calculate the content.
It contains not less than 9.0 per cent of the total amount of picroside Ⅰ ($C_{24}H_{28}O_{11}$) and picroside Ⅱ ($C_{23}H_{28}O_{13}$), calculated with reference to the dried drug.

Processing Eliminate foreign matter, wash clean, soften thoroughly and cut into thin slices, or break to pieces before use.
In irregular rounded thin slices, cut surface greyish-black or brownish-black, with white dotted vascular bundles, blackish-brown at the edge. Texture fragile.

Action To remove *damp-heat*, and relieve consumptive fever.

Indications Dysentery or jaundice caused by *damp-heat*; hemorrhoids; consumptive fever and fever in infantile malnutrition due to digestive disturbance.

Usage and dosage 1.5-9 g.

Storage Preserve in a dry place.

Rhizoma Pinelliae (半夏, Banxia)

Pinellia Tuber

Pinellia Tuber is the dried tuber of *Pinellia ternata* (Thunb.) Breit. (Fam. Araceae). The drug is collected in summer and autumn, washed clean, removed from the outer bark and fibrous root, and dried in the sun.

Description Subspheroidal, some slightly oblique, 1-1.5 cm in diameter. Externally white or yellowish, apex with a dented stem scar, densely surrounded by pocked and dotted root scars, base obtuse and rounded, relatively smooth. Texture hard, fracture white and starchy. Odour, slight; taste, pungent, with numbing and irritating sensation.

Identification (1) Powder: Whitish. Starch granules fairly abundant, simple granules subrounded, semi-circular or rounded-polygonal, 2-20 μm in diameter, hilum slit-shaped, Y-shaped or stellate; compound granules of 2-6 components. Raphides of calcium oxalate embedded in elliptical mucilage cells or scattered throughout, needle crystals 20-144 μm long. Spiral vessels 10-24 μm in diameter.
(2) To 1 g of the powder add 10 ml of methanol, heat under reflux for 30 minutes, filter, evaporate the filtrate to about 0.5 ml as the test solution. Dissolve arginine CRS, alanine CRS, valine CRS and leucine CRS in 70% methanol to produce a mixture containing 1 mg of each per ml as the reference solution. Carry out the method for thin layer chromatography (Appendix Ⅵ B), using silica gel G mixed with sodium carboxymethylcellulose as the coating substance and a mixture of *n*-butanol, glacial acetic acid and water (8 : 3 : 1) as the mobile phase. Apply separately 5 μl of the test solution and 1 μl of the reference solution to the plate. After developing and removal of the plate, dry in air, spray with ninhydrin TS, heat at 105℃ to the spots clear. The spots in the chromatogram obtained with the test solution correspond in position and colour to the spots in the chromatogram obtained with the reference solution.

Processing *Rhizoma Pinelliae (unprocessed)* Eliminate foreign matter. Break to pieces before use.

Rhizoma Pinelliae (processed with alum) Grade clean Rhizoma Pinelliae according to size, soak in 8% Alumen solution until the centre of the cut surface is devoid of a dry core and the drug has a slight numbing taste. Take out, wash well, cut into thick slices and dry, using 20 kg of Alumen per 100 kg of Rhizoma Pinelliae.
Elliptical, subrounded, or irregular pieces. Cut surface grey to greyish-white, vascular bundle traces greyish-white, pointed or short line-shaped, sometimes showing purplish-red dapples under the remaining cork. Texture fragile, easily broken, fracture slightly horny. Odour, slight; taste, slightly astringent and numb.

Rhizoma Pinelliae (processed with ginger) Grade clean Rhizoma Pinelliae according to size, soak in water until the centre of the cut surface is devoid of a dry core. Add Alumen and the decoction of the slices of Rhizoma Zingiberis Recens to Rhizoma Pinelliae, boil thoroughly, take out, dry in air to half dryness, then cut into thin slices and dry. Using 25 kg of Rhizoma Zingiberis Recens and 12.5 kg of Alumen per 100 kg of Rhizoma Pinelliae.
Sliced, irregular granular or subspheroidal. Externally brown to dark brown. Texture hard and fragile, fracture pale yellowish-brown, frequently horny and lustrous. Odour, slight aromatic; taste weak, slight with numbing and viscous on chewing.

Action To remove *damp* and *phlegm*, relieve nausea and vomiting, and eliminate stuffiness in the chest and the epigastrium.

Indications Cough and asthma with much phlegm; dizziness and palpitation due to retention of phlegm and fluid; vertigo caused by *wind-phlegm*; headache with cold extremities due to attack of phlegm; stuffiness in the chest and the epigastrium; globus hystericus. *Rhizoma Pinelliae (processed with ginger)* is often used for relieving nausea and vomiting, while *Rhizoma Pinelliae (unprocessed)* is used externally for boils, sores and lymphadenitis.

Usage and dosage 3-9 g; for external use, appropriate quantity is rubbed into juice or ground into powder and applied topically after mixing with liquor.

Precaution Incompatible with Radix Aconiti and allied drugs.

Storage Preserve in a ventilated and dry place, protected from moth.

Rhizoma Pinelliae Praeparatum (法半夏, Fabanxia)

Prepared Pinellia Tuber

Prepared Pinellia Tuber is prepared from the Rhizoma Pinelliae.

Procedure Grade Rhizoma Pinelliae according to size, soak in water until the centre of the drug is devoid of a dry core, and take out. Decoct Liquorice with a quantity of water twice, combine the decoctions and pour into the lime solution prepared with suitable amount water, stir evenly, add the soaked Rhizoma Pinelliae, soak, and stir 1-2 times every day, maintain the solution over pH 12 until the cut surface becomes yellow evenly, and tastes a slight numbing sensation, take out, wash clean and dry in the shade or by baking.
To each 100 kg of Rhizoma Pinelliae add 15 kg of Liquorice and 10 kg of quick lime.

Description Subspherical or broken into irregular granules. Externally yellowish-white, yellow or brownish yellow. Texture fragile, loose or hard, granules hard and fragile slightly, fracture yellow or greyish yellow. Odour slight;

taste, slight sweetish and slight numbing.

Identification (1) Powder: Pale yellow to yellow. Comply with the examination as described under the Identification (1) of Rhizoma Pineliae, showing the same results.
(2) To 2 g of the powder add 2 ml of hydrochloric acid and 20 ml of chloroform, heat under reflux for 1 hour, cool, filter, evaporate the filtrate to dryness. Dissolve the residue in 0.5 ml of absolute ethanol as the test solution. Dissolve glycyrrhetinic acid CRS in absolute ethanol to produce a solution containing 1 mg per ml as the reference solution. Carry out the method for thin layer chromatography (Appendix Ⅵ B), using silica gel GF_{254} mixed with sodium carboxymethylcellulose as the coating substance and a mixture of petroleum ether (30-60℃), benzene, ethyl acetate and glacial acetic acid (10 : 20 : 7 : 0.5) as the mobile phase. Apply separately 5 μl of the test solution and 2 μl of the reference solution to the plate. After developing and removal of the plate, dry in air and examine under ultraviolet light at 254 nm. The dark red spot in the chromatogram obtained with the test solution corresponds in position and colour to the spot in the chromatogram obtained with the reference solution.

Action To remove *dampness* and resolve phlegm.

Indications Cough and asthma with copious phlegm, dizziness and palpitation caused by *wind-phlegm* and phlegm retention, headache due to adverse rising of phlegm.

Usage and dosage 3-9 g.

Precaution, Storage As described under Rhizoma Pinelliae.

Rhizoma Polygonati (黄精, Huangjing)

Solomonseal Rhizome

Solomonseal Rhizome is the dried rhizome of *Polygonatum kingianum* Coll. et Hemsl., *Polygonatum sibiricum* Red., or *Polygonatum cyrtonema* Hua (Fam. Liliaceace). According to the shape, they are commonly known as "Dahuangjing", "Jitouhuangjing", and "Jiangxinghuangjing". The drug is collected in spring or autumn, removed from fibrous root, washed clean, scalded briefly or steamed to be softened, and dried.

Description *Dahuangjing* Fleshy tuberculated, up to more than 10 cm long, 3-6 cm wide, 2-3 cm thick. Externally pale yellow to yellowish-brown, with ring-shaped nodes, striations and fibrous root scars, the upper part of nodes showing discoidal lateral stem scars with a sunken circumference and prominent centre. Texture hard and tenacious, uneasily broken, fracture horny, pale yellow to yellowish-brown. Odour, slight; taste, sweet, and viscous on chewing.

Jitouhuangjing Tuberculated cylindrical, curved, 3-10 cm long, 0.5-1.5 cm in diameter. Node 2-4 cm long, somewhat conical, often branched. Externally yellowish-white or greyish-yellow, translucent with longitudinal wrinkles, rounded stem scars 5-8 mm in diameter.

Jiangxinghuangjing Elongated tuberculated, varying in length, often connected in groups of several tubercles. Externally greyish-yellow or yellowish-brown, rough, bearing prominent and discoidal stem scars on the upper part of nodes, 0.8-1.5 cm in diameter.

Identification Transverse section of rhizome:

Dahuangjing External walls of epidermal cells relatively thick. Numerous large mucilaginous cells containing raphides of calcium oxalate, scattered in parenchyma. Vascular bundles scattered throughout, usually in amphivasal-type.

Jitouhuangjing, *Jiangxinghuangjing* Vascular bundles usually in collateral-type.

Water Carry out the method for determination of water (Appendix Ⅸ H, method 2), not more than 18 per cent.

Total ash Crush the crude drug, previously dried for 6 hours at 80℃. Not more than 4.0 per cent (Appendix Ⅸ K).

Acid-insoluble ash Not more than 1.0 per cent (Appendix Ⅸ K).

Extractives Carry out the hot extraction method as described under the determination of ethanol-soluble extractives (Appendix Ⅹ A), using dilute ethanol TS as the solvent, not less than 45.0 per cent.

Assay *Reference solution* Weigh accurately 33 mg of anhydrous glucose CRS, dried previously to constant weight at 105℃, to a 100 ml volumetric flask, dissolve with water and dilute to volume, mix well (containing 0.33 mg of anhydrous glucose per ml).

Calibration standard Measure accurately 0.1, 0.2, 0.3, 0.4, 0.5 and 0.6 ml of the reference solution, respectively, into 10 ml stopper graduated test tube, add water to 2.0 ml, mix well, slowly dropwise a 0.2% solution of anthranone in sulfuric acid to volume on an ice-water bath, mix well and cool. After thermal insulating for 10 minutes on a water bath, immediately cool on an ice-water bath for 10 minutes and take out. Use the corresponding mixed reagents as the blank. Carry out the method for ultraviolet spectrophotometry and colourimetry (Appendix Ⅴ A), measure the absorbance at 582 nm and plot the standard curve, using absorbance as ordinate and concentration as abscissa.

Procedure Weigh accurately 0.25 g of the fine powder, previously dried to constant weight at 60℃, to a round-bottom flask, add 150 ml of 80% ethanol and heat under reflux on a water bath for 1 hour and filter. Wash the residue with three 10-ml quantities of 80% hot ethanol. Transfer the residue and the filter paper to a flask, add 150 ml of water and heat under reflux for 1 hour, filter while hot, wash the residue and the flask with four 10-ml quantities of hot water. Combine the filtrate and the washings, cool and transfer to a 250 ml volumetric flask, dilute with water to volume and mix well. Measure accurately 1 ml to a 10 ml dried stopper test tube. Carry out the procedure as described under the calibration standard, beginning at the words "add water to 2.0 ml", measure the absorbance and read out the weight of glucose (mg) in the test solution from the standard curve, and calculate the content.
It contains not less than 7.0 per cent of solomonseal polysaccharides, calculated as anhydrous glucose ($C_6H_{12}O_6$) with reference to the dried drug.

Processing *Rhizoma Polygonati* Eliminate foreign matter, wash clean, slightly soften, cut into thick slices and dry.

Rhizoma Polygonati (*processed with wine*) Stew or steam the clean Rhizoma Polygonati thoroughly as described under the method for stewing with wine or steaming with wine (Appendix Ⅱ D), dry briefly in the air, cut into thick slices and dry.
To each 100 kg of Rhizoma Polygonati add 20 kg of yellow rice wine.

Action To reinforce *qi* and nourish *yin*, invigorate the

function of the spleen, moisten the lung, and benefit the kidney.

Indications Weakness of the spleen and the stomach marked by lassitude, dryness in the mouth and anorexia; dry cough due to deficiency of *yin* of the lung; deficiency of vital essence and blood; wasting-thirst caused by internal *heat*.

Usage and dosage 9-15 g.

Storage Preserve in a ventilated and dry place, protected from mould and moth.

Rhizoma Polygonati Odorati (玉竹, Yuzhu)

Fragrant Solomonseal Rhizome

Fragrant Solomonseal Rhizome is the dried rhizome of *Polygonatum odoratum* (Mill.) Druce (Fam. Liliaceae). The drug is collected in autumn, removed from the fibrous root, washed clean, dried in the sun to soften, rubbed repeatly and dried in the air until the drug is devoid of hard core, and then dried in the sun thoroughly. Or rubbed to be translucent after steaming thoroughly, and dried in the sun.

Description Long cylindrical, slightly compressed, few branched, 4-18 cm long, 0.3-1.6 cm in diameter. Externally yellowish-white or yellowish-brown, translucent, with longitudinal wrinkles and slightly raised annulations, exhibiting white rounded-dotted fibrous root scars and a disk-like stem scar. Texture hard and fragile or slightly soft, easily broken, fracture horny or granular. Odour slight; taste, sweetish and viscous on chewing.

Identification Transvese section: Epidermal cells oblate or compressed-rectangular, outer walls slightly thickened, cutinized. Numerous mucilage cells scattered throughout parenchyma, 80-140 μm in diameter, containing raphides of calcium oxalate. Collateral bundles, a few amphivasal bundles, scattered.

Assay *Reference solution* Weigh accurately 60 mg of anhydrous glucose CRS, dried previously to constant weight at 105℃, to a 100 ml volumetric flask, dissolve in water and dilute to volume, mix well (containing 0.6 mg of anhydrous glucose per ml).

Calibration standard Measure accurately, 1.0, 1.5, 2.0, 2.5, 3.0 ml of the reference solution in 50 ml volumetric flasks, respectively, dilute with water to volume and mix well. Transfer 2 ml, accurately measured, of each of the resulting solutions to stopper tubes respectively, add 1 ml of 4% phenol solution, mix well, add 7.0 ml of sulfuric acid quickly, shake, keep in a 40℃ water bath for 30 minutes, then move to ice bath for 5 minutes. Carry out the method for ultraviolet spectrophotometry colourimetry (Appendix V A), measure the absorbance at 490 nm, taking the mixture of corresponding solvents as a blank, and plot the standard curve, using absorbance as ordinate and concentration as abscissa.

Procedure Weigh accurately 1 g of the coarse powder to a round bottom flask, add 100 ml of water, heat under reflux for 1 hour, filter with defatted cotton. Repeat the extraction as above once, combine the filtrates, concentrate and transfer to a 100 ml volumetric flask, dilute with water to volume, mix well. Measure accurately 2 ml of the solution, add 10 ml of ethanol, stir and centrifuge, dissolve the precipitate in water, transfer to a 50 ml volumetric flask, and dilute to volume. Measure 2 ml of the resulting solution, carry out the procedure as described under Calibration standard, begining at the words "add 1 ml of 4% phenol", measure the absorbance, read out the weight (mg) of the anhydrous glucose of Rhizoma Polygonati Odorati in the test solution from the standard curve and calculate.

It contains not less than 6.0 per cent of polysaccharide, calculated as glucose ($C_6H_{12}O_6$) with reference to the dried drug.

Processing Eliminate foreign matter, wash clean, soften thoroughly, cut into thick slices or sections and dry.

Action To nourish *yin*, promote the production of body fluid, and relieve dryness syndrome.

Indications Impairment of *yin* of the lung and the stomach with dry cough, dryness of the throat and thirst; wasting-thirst caused by internal *heat*.

Usage and dosage 6-12 g.

Storage Preserve in a ventilated and dry place, protected from mould and moth.

Rhizoma Smilacis Chinae (菝葜, Baqia)

Chinaroot Greenbrier Rhizome

Chinaroot Greenbrier Rhizome is the dried rhizome of *Smilax china* L. (Fam. Liliaceae). The drug is collected in the end of autumn to next spring, removed from fibrous root, washed clean, dried in the sun, or sliced while fresh and dried.

Description Irregular pieces or curved flattened cylindrical, with knob-like outgrowths, 10-20 cm long, 2-4 cm in diameter. Externally yellowish-brown or purplish-brown, with conical protuberant stem scars and stiff spinous remains of fibrous roots or radicels. Texture hard, uneasily broken, fracture fibrous, brownish-yellow or reddish-brown, dotted vascular bundles and numerous small light spots visible. Odourless; taste, slightly bitter and astringent.

Identification (1) Powder: Reddish-brown. Starch granules mostly simple, subrounded or semispherical, 5-30 μm in diameter, hilum pointed, cleft or flyer-shaped. Stone cells singly scattered or several in groups, pale yellow or reddish-brown, subrounded, long elliptical, subsquare or irregular, with distinct branched pit canals, lumen small with oblong pits, some lumen containing reddish-brown content. Fibres frequent, in groups or scattered, pale yellow or deep brown. Needles of calcium oxalate mostly scattered, occasionally in bundles occurring in mucilage cells, 75-140 μm long.

(2) To 5 g of the powder add 50 ml of ethanol, ultrasonicate for 30 minutes, filter, add 5 ml of hydrochloric acid to the filtrate, heat under reflux on a water bath for 2 hours, cool, adjust to neutral with 40% solution of sodium hydroxide, evaporate to no smell of ethanol. Dissolve the residue in 40 ml of hot water, extract with dichloromethane by shaking, 40 ml for the first time and 30 ml for the second time, combine the extracts, evaporate to dryness, and dissolve the residue in 1 ml of methanol as the test solution. Dissolve diosgenin CRS in methanol to produce a solution containing 0.5 mg per ml as the reference solution. Carry out the method for thin layer chromatography (Appendix VI B), using silica gel G as the coating substance and a mixture of cyclohexane and ethyl acetate (4 : 1) as the mobile phase. Apply separately to the plate 10 μl of each of the

above two solutions. After developing and removal of the plate, dry in air, spray with 10% solution of sulfuric acid in ethanol, and heat at 105℃ to the spots clear. The spot in the chromatogram obtained with the test solution corresponds in position and colour to the spot in the chromatogram obtained with the reference solution.

Water Carry out the method for the determination of water (Appendix Ⅸ H, Method 1), not more than 12.0 per cent.

Total ash Not more than 3.0 per cent (Appendix Ⅸ K).

Acid-insoluble ash Not more than 1.0 per cent (Appendix Ⅸ K).

Extractives Carry out the hot extraction method as described under the determination of ethanol-soluble extractives (Appendix Ⅹ A), using 60% ethanol as the solvent, not less than 15.0 per cent.

Assay Carry out the method for high performance liquid chromatography (Appendix Ⅵ D).

Chromatographic system and system suitability Use octadecylsilane bonded silica gel as the stationary phase and a mixture of acetonitrile and water (90 : 10) as the mobile phase. As detector a spectrophotometer set at 203 nm. The number of theoretical plates of the column is not less than 8000, calculated with reference to the peak of diosgenin.

Reference solution Dissolve a quantity of diosgenin CRS, accurately weighed, in acetonitrile to produce a solution containing 0.2 mg per ml as reference solution.

Test solution Weighed accurately 8 g of the powder (through No. 2 sieve) into a Soxhlet's extractor, add a quantity of ethanol, soak overnight, heat under reflux until the extract colourless. Recover the solvent to about 100 ml, add 16 ml of hydrochloric acid, heat under reflux on a water bath for 2 hours, cool, extract with four 40-ml quantities of petroleum ether (60-90℃) by shaking. Combine the extracts, recover the solvent to dryness. Dissolve the residue in acetonitrile and transfer it to a 10 ml volumetric flask, dilute with acetonitrile to volume, mix well, filter, and use the successive filtrate as the test solution.

Procedures Inject accurately 20 μl of each of the reference solution and the test solution, respectively, into the column, and calculate the content.
It contains not less than 0.040 per cent of diosgenin ($C_{27}H_{42}O_3$), calculated with reference to the dried drug.

Processing Eliminate foreign matter and remove the remains of fibrous roots, wash clean, soften thoroughly, cut into slices, and dry.

Action To expel *wind* and *dampness*, relieve *toxicity* and disperse blood stasis.

Indications Aching pain of muscles and joints, dribbing of urine, morbid leukorrhea, furuncles and sores.

Usage and dosage 10-15 g.

Storage Preserve in a ventilated and dry place.

Rhizoma Smilacis Glabrae (土茯苓, Tufuling)

Glabrous Greenbrier Rhizome

Glabrous Greenbrier Rhizome is the dried rhizome of *Smilax glabra* Roxb. (Fam. Liliaceae). The drug is collected in summer or autumn, removed from fibrous root, washed clean, and dried, or sliced while fresh, and dried.

Description Subcylindrical, slightly flattened or irregularly slat-shaped and lump-shaped, with knob-like outgrowths and short branches, 5-22 cm long, 2-5 cm in diameter. Externally yellowish-brown or greyish-brown, uneven, with stiff remains of fibrous roots and the tops of branches possessing rounded bud scars. Some outer bark irregularly fissured and exhibiting remains of scales. Texture hard. Slices oblong or irregular-shaped, 1-5 mm thick, edge irregular; transversely cut surface whitish to pale red-brown, starchy, dotted vascular bundles and numerous small light spots visible. Texture slightly tough, dusting on breaking, viscous and slippery when moistened. Odourless; taste slightly sweet and astringent.

Identification Powder: Pale brown. Starch granules abundant, simple granules subspherical, polygonal or subsquare, 8-48 μm in diameter, hilum cleft, stellate, Y-shaped or pointed, striations visible in large granules; compound granules consisting of 2-4 components. Raphides of calcium oxalate occurring in mucilage cells or scattered throughout, needle crystals 40-144 μm long, about 5 μm in diameter. Stone cells subelliptical, subsquare or triangular, 25-128 μm in diameter, with fine and dense pit canals; deep brown stone cells elongated, about 50 μm in diameter, walls heavily thickened on the three sides and thin on one side. Fibres in bundles or scattered, 22-67 μm in diameter. Bordered pitted vessels and tracheids more frequent, most bordered pits transversely elongated.

Water Carry out the method for the determination of water (Appendix Ⅸ H, Method 1), not more than 15.0 per cent.

Total ash Not more than 5.0 per cent (Appendix Ⅸ K).

Acid-insoluble ash Not more than 1.0 per cent (Appendix Ⅸ K).

Extractives Carry out the method for determination of ethanol-soluble extractives (Appendix Ⅹ A, the hot extraction method), using dilute ethanol TS as the solvent, not less than 15.0 per cent.

Processing Eliminate foreign matter; for the unsliced drug soak, wash clean, soften thoroughly, cut into thin slices, and dry.

Action To remove *damp*, counteract *toxicity*, and improve the mobility of joints.

Indications Dysuria with turbid discharge, morbid leukorrhea, carbuncle, lymphadentitis, chronic eczema; contracture of limbs and muscle pain in syphilis with mercury poisoning.

Usage and dosage 15-60 g.

Storage Preserve in a ventilated and dry place.

Rhizoma Sparganii (三棱, Sanleng)

Common Burreed Tuber

Common Burreed Tuber is the dried rhizome of *Sparganium stoloniferum* Buch.-Ham. (Fam. Sparganiaceae). The drug is collected from winter to the next spring, washed clean, peeled, and dried in the sun.

Description Conical, slightly flattened, 2-6 cm long, 2-4 cm in diameter. Externally yellowish-white or greyish-yellow, with marks pared with a knife, fibrous root scars

spotted, slightly ringed-arranged transversely. Texture heavy, compact. Odour, slight; taste, weak, slightly numb on chewing.

Identification (1) Transverse section: Aerenchyma of cortex, consisting of branched parenchymatous cells, tops of branches connected each other forming large intercellular spaces; endodermal cells densely arranged. Parenchymatous cells of stele subrounded, slightly thick-walled, containing starch granules; collateral and amphivasal bundles scattered, vessels non-lignified. Secretory cells scattered in cortex and stele filled with brownish-red secretion.

(2) To 2 g of the powder add 30 ml of ethanol, heat under reflux for 1 hour and filter. Evaporate the filtrate to dryness, and dissolve the residue in 2 ml of ethanol as the test solution. Prepare a solution 2 g of Rhizoma Sparganii reference drug in the same manner as the reference drug solution. Carry out the method for thin layer chromatography (Appendix Ⅵ B), using silica gel G as the coating substance and a mixture of cyclohexane and ethyl acetate (4 : 1) as the mobile phase. Apply separately to the plate 10 μl of each of the above two solutions. After developing and removal of the plate, dry in air. Spray with 10% sulfuric acid in ethanol, heat at 105℃ to the spots clear. The spots in the chromatogram obtained with the test solution correspond in position and colour to the spots in the chromatogram obtained with the reference drug solution.

Water Carry out the method for determination of water (Appendix Ⅸ H, method 1), not more than 15.0 per cent.

Total ash Not more than 3.0 per cent (Appendix Ⅸ K).

Extractives Carry out the method for determination of ethanol-soluble extractives (Appendix Ⅹ A, the hot extraction method), using dilute ethanol TS as the solvent, not less than 7.5 per cent.

Processing *Rhizoma Sparganii* Eliminate foreign matter, soak, soften thoroughly, cut into thin slices, and dry.

Rhizoma Sparganii (*processed with vinegar*) Stir-bake the slices of Rhizoma Sparganii as described under the method for stir-baking with vinegar (Appendix Ⅱ D) until a deep colour is produced, using 15 kg of vinegar per 100 kg of slices of Rhizoma Sparganii.

Action To eliminate blood stasis with strong effect, promote the flow of *qi*, remove the retention of undigested food, and relieve pain.

Indications Mass in the abdomen; amenorrhea due to blood stasis; abdominal distension and pain caused by retention of undigested food.

Usage and dosage 4.5-9 g.

Precaution Contraindicated in pregnancy.

Storage Preserve in a ventilated and dry place, protected from moth.

Rhizoma Typhonii (白附子, Baifuzi)

Giant Typhonium Rhizome

Giant Typhonium Rhizome is the dried tuber of *Typhonium giganteum* Engl. (Fam. Araceae). The drug is collected in autumn, removed from the fibrous root and the outer bark, and dried in the sun.

Description Ellipsoidal or ovoid, 2-5 cm long, 1-3 cm in diameter. Externally white to yellowish-white, slightly rough, exhibiting annulations and fibrous root scars, top marked with stem scars and bud scars. Texture hard, fracture white, starchy. Odour, slight; taste, weak, with numb and pungent sensation.

Identification Trasverse section: Sometimes cork cells adhering. Endodermis indistinct. Parenchyma scattered with large mucilage cavities, relatively large in the outer part, usually ringed, gradually becoming small and rare to centre, mucilage cells found everywhere, containing raphides of calcium oxalate. Vascular bundles scattered, collateral and amphivasal. Parenchymatous cells containing abundant starch granules.

Powder: Yellowish-white. Starch granules abundant, simple granules spherical or subspherical, 2-29 μm in diameter, hilum pointed, slit-shaped or V-shaped; compound granules of 2-12 components, among which 2-4 components visible frequently. Needle crystals of calcium oxalate scattered or in bundles embedded in mucilage cells, needle crystal up to 97 (136) μm long. Spiral and annular vessels 9-45 μm in diameter.

Processing *Rhizoma Typhonii* (*unprocessed*) Eliminate foreign matter.

Rhizoma Typhonii (*processed*) Grade Rhizoma Typhonii according to size, soak in water and exchange water 2-3 times every day. After several days some foams emerge, change water again, add a quantity of Alumen equivalent to 2 kg of Alumen per 100 kg of Rhizoma Typhonii. Soak again in water for a day and change water until the drug has slight numbing feeling to the tongue, and take it out. Put the slices of Rhizoma Zingiberis Recens and powder of Alumen in a pan and boil with a quantity of water, then add Rhizoma Typhonii, mix well and boil until the cut surface of the drug is devoid of a dry core. Take out, remove the slices of Rhizoma Zingiberis Recens, dry partially in the shade, cut into thick slices, and dry.

To each 100 kg of Rhizoma Typhonii add 12.5 kg of each of Rhizoma Zingiberis Recens and Alumen.

Occurring in subrounded or elliptic thick slices, pale brown at the edge, yellow at the cut surface, horny. Odour, slight; taste, weak with slight numb and pungent sensation.

Action To dispel *wind-phlegm*, to check convulsion, and counteract *toxicity*, promote subsidence of nodulation and relieve pain.

Indications Stroke with gurgling in the throat, deviation of the eye and the mouth, and impairment of speech; upward invasion of *phlegm* causing headache accompanied with dizziness, heavy body, restlessness, fidgets nausea and cold extremities, or migraine; sore throat; tetanus; external use for scrofula, venomous snake-bite.

Usage and dosage Usually used after processing, 3-6 g; for external use, appropriate quantity of the unprocessed tuber is pounded into paste, stewed into soft extract or ground into powder (mixed with wine), and applied topically.

Precaution Be cautions when the unprocessed tuber is taken orally. Used with caution in pregnancy.

Storage Preserve in a ventilated and dry place, protected from moth.

Rhizoma Wenyujin Concisum (片姜黄, Pianjianghuang)

Wenyujin Concise Rhizome

Wenyujin Concise Rhizome is the dried rhizome of

Curcuma wenyujin Y. H. Chen et C. Ling (Fam. Zingiberaceae). The drug is collected in autumn when stem and leaf withered, washed clean, removed from fibrous root, cut into thick slice while fresh, and dried in the sun.

Description Long-rounded or irregularly sliced, varying in size, 3-6 cm long, 1-3 cm wide, 1-4 mm thick. The outer bark greyish-yellow, rough and uneven with numerous annular nodes and fibrous root scars, transversely cut surface yellowish-white to brownish-yellow, with an annular ring and numerous dotted vascular bundles. Texture hard and fragile, fracture greyish-white to brownish-yellow, somewhat starchy. Odour, characteristic and aromatic; taste, slightly bitter, pungent and cool.

Identification (1) Transverse section: Epidermal cells remained, outer walls slightly thickened. Cork consisting of several layers of cells. Cortex scattered with leaf-trace vascular bundles, endodermis distinct. Stele large, vascular bundles collateral, relatively small outside and arranged densely, some xylem with 1 or 2 vessels only. Parenchyma scattered with oil cells in cortex and stele, parenchymatous cells containing starch granules.
(2) To 1 g of the powder add 5 ml of petroleum ether (30-60℃), shake constantly about 30 minutes, filter, dilute the filtrate to 5 ml as the test solution. Prepare a solution of 1 g of Rhizoma Wenyujin Concisum reference drug in the same manner as the reference drug solution. Carry out the method for thin layer chro-matograghy (Appendix Ⅵ B), using silica gel G as the coat-ing substance and a mixture of petroleum ether (30-60℃) and ethyl acetate (17 : 3) as the mobile phase. Apply separately 2 μl of each of the above two solutions to the plate. After developing and removal of the plate, dry in air, spray with 1% solution of vanilin in sulfuric acid, heat at 100℃ to the spots clear. The spots in the chromatogram obtained with the test solution correspond in position and colour to the spots in the chromatogram obtained with the reference drug solution.

Assay Carry out the method for determination of volatile oil (Appendix Ⅹ, method 1).
It contains not less than 1.0 per cent (ml/g) of volatile oil.

Action To eliminate blood stasis, promote the flow of *qi*, stimulate the menstrual discharge and relieve pain.

Indications Amenorrhea and dysmenorrhea due to blood stasis; pricking pain in the chest and hypochondriac regions, arthralgia, traumatic injuries.

Usage and dosage 3-9 g.

Precaution Used with caution in pregnancy.

Storage Preserve in a cool and dry place, protected from moth.

Rhizoma Zingiberis (干姜, Ganjiang)

Zingiber (Dried Ginger)

Zingiber is the dried rhizome of *Zingiber officinale* (Willd.) Rosc. (Fam. Zingiberaceae). The drug is collected in winter, removed from fibrous root and soil, and dried in the sun or at a lower temperature. The drug which is sliced while fleshy and dried in the sun or at a lower temperature is known as "Slice of Rhizoma Zingiberis".

Description *Rhizoma Zingiberis* In flattened pieces with fingered branches, 3-7 cm long, 1-2 cm thick. Externally greyish-yellow or pale greyish-brown, rough, with longitudinal wrinkles and distinct annulated-nodes. Branched parts usually with remains of scale leaves, apex with stem-scars or buds. Texture compact, fracture yellowish-white or greyish-white, starchy and granular, exhibiting a distinct ring of endodermis, scattered with vascular bundles and yellow oil drops. Odour, aromatic and characteristic; taste, pungent.

Slice of Rhizoma Zingiberis Occurring in irregular slices cut longitudinally or obliquely, with fingered branches, 1-6 cm long, 1-2 cm wide, 0.2-0.4 cm thick. Externally greyish-yellow or pale yellowish-brown, rough, with longitudinal wrinkles and distinct annulated-nodes. Cut surface greyish-yellow or greyish-white, slightly starchy, showing more longitudinal fibres, some of which appearing hair-like. Texture compact, fracture fibrous. Odour, aromatic and characteristic; taste, pungent.

Identification (1) Powder: Pale yellowish-brown. Starch granules fairly abundant, long ovate, triangular-ovoid, elliptical, subrounded or irregular, 5-40 μm in diameter, hilum pointed, at the small end, sometimes cleft, striations obvious. Oil cells and resin cells scattered in parenchyma, containing pale yellow oil drops or dark reddish-brown substance. Fibres in bundles or scattered, apex obtusely acute, few branched, some undulate or serrate on one side, 15-40 μm in diameter, walls slightly thickened, unlignified, with fine oblique pits, frequently with thin septa. Vessels mostly scalariform, spiral and reticulate, few annular, 15-70 μm in diameter. Tubular cells containing dark reddish-brown substance, 12-20 μm in diameter, occasionally found beside vessels and fibres.
(2) To 2 g of the powder add 20ml of ethanol, ultrasonicate for 20 minutes, filter, evaporate the filtrate to dryness, dissolve the residue in 1 ml of methanol as the test solution. Prepare a solution of 2 g of Rhizoma Zingiberis reference drug in the same manner as the reference drug solution. Carry out the method for thin layer chromatography (Appendix Ⅵ B), using silica gel G mixed with sodium carboxymethylcellulose as the coating substance and a mixture of cyclohexane and ether (1 : 1) as the mobile phase. Apply separately to the plate 4 μl of each of the above two solutions. After developing and removal of the plate, dry in air, spray with vanillin TS in sulfuric acid, heat at 105℃ to the spots clear. The spots in the chromatogram obtained with the test solution correspond in position and colour to the spots in the chromatogram obtained with the reference drug solution.

Total ash Not more than 6.0 per cent (Appendix Ⅸ K).

Assay To a quantity of the coarse powder, add 700 ml of water, and carry out the method for determination of volatile oil (Appendix Ⅹ D).
It contains not less than 0.8 per cent (ml/g) of volatile oil.

Processing *Rhizoma Zingiberis* Eliminate foreign matter, soak briefly, wash clean, soften thoroughly, cut into thick slices or pieces, and dry.
Irregular pieces, 0.2-0.4 cm thick. Total ash not more than 5.5 per cent.

Rhizoma Zingiberis (carbonized) Stir-bake the pieces of Rhizoma Zingiberis as described under the method for carbonized by stir-baking (Appendix Ⅱ D) until the surface becomes black and the inner part brown.

Action To dispel *cold* from the spleen and the stomach, promote recovery from collapse, and eliminate *damp* and *phlegm*.

Rhizoma Zingiberis (processed) To dispel *cold* from the spleen and the stomach, and arrest bleeding.

Indications Epigastric pain with cold feeling, vomiting and diarrhea accompanied with cold extremities and faint pulse; dyspnea and cough with copious frothy expectoration.

Usage and dosage 3-9 g.

Storage Preserve in a cool and dry place, protected from moth.

Preparation Extractum Zingiberis Liquidum

Rhizoma Zingiberis Praeparatum (炮姜, Paojiang)

Prepared Dried Ginger

Prepared Dried Ginger is prepared from the Rhizoma Zingiberis.

Procedure Scald the dried Ginger with sand (Appendix Ⅱ D) until it becomes inflated and brown externally.

Description Irregular inflated pieces with fingered branches. Externally brownish black or brown. Texture light and loose, fracture brownish-black at the margin, brownish-yellow in the inner part, fine granular, vascular bundles scattered. Odour, aromatic and characteristic; taste, slight pungent.

Identification Powder: Brown. Starch granules abundant, long-ovoid, deltoid-ovoid, ellipsoid, subrounded or irregular, 5-40 μm in diameter, hilum pointed in the smaller end and cleft-like as well, sometimes striations visible, gelatinized masses visible occasionally. Oil cells and resin cells scattered in parenchyma, containing pale yellow oil drops or dark reddish brown contents. Fibres in bundles or scattered, blunt-acute at the end, few branched, sometimes sinuated on one side, 15-40 μm in diameter, walls thickened slightly, nonlignified, with fine oblique pits, and thin transverse septa usually visible. Vessels mostly scalariform, reticulate or spiral, occasionally annular, 15-70 μm in diameter; beside the vessels or fibres, tubular cells containing dark reddish brown contents visible, 12-20 μm in diameter.

Total ash Not more than 7.0 per cent (Appendix Ⅸ K).

Action To warm the *middle-energizer*, arrest bleed-ing by warming the meridians.

Indications *Deficiency-cold* of spleen and stomach, abdomen ache, vomiting and diarrhea, haematemesis, epistaxis, uterine bleeding, bleeding due to *yang-deficiency*.

Usage and dosage, Storage As described under Rhizoma Zingiberis.

Rhizoma Zingiberis Recens (生姜, Shengjiang)

Fresh Ginger

Fresh Ginger is the fresh rhizome of *Zingiber officinale* (Willd.) Rosc. (Fam. Zingiberaceae). The drug is collected in autumn and winter, removed from fibrous root and soil.

Description In irregular pieces, slightly compressed, with finger-like branches, 4-18 cm long, 1-3 cm thick. Externally yellowish-brown or greyish-brown, ringed, the top of each branch exhibiting a stem scar or buds. Texture fragile, easily broken, fracture pale yellow, with a well-marked endodermis ring and scattered vascular bundles. Odour, aromatic and characteristic; taste, pungent.

Processing *Rhizoma Zingiberis Recens* Eliminate foreign matter, wash clean and cut into thick slices before use.

Peel of Rhizoma Zingiberis Recens Scrape the outer peel of clean Rhizoma Zingiberis Recens.

Action To induce perspiration and dispel *cold*, warm the stomach and arret vomiting, and resolve phlegm and relieve cough.

Indications Common cold; vomiting caused by cold in the stomach; cough with expectoration of whitish thin sputum.

Usage and dosage 3-9 g.

Storage Preserve in a cool and moist place, or embed in wet sand, protected from freezing.

Sanguis Draconis (血竭, Xuejie)

Dragon's Blood

Sanguis Draxonis is the prepared resin of the fruit of *Daemonorops draco* Bl. (Fam. Palmae).

Description Slightly sub-rounded square or square, externally dark red, lustrous, attached with friction-caused red colour. Texture hard and fragile, broken surface red, ground powder brick red. Odour, slight; taste, weak. Insoluble in water, softened in hot water.

Identification (1) Add the powder to a piece of white paper, melt heating at a distance from the fire, but show no spreading oil stains, present bright red. It turns irritating smell being burnt.

(2) To about 0.1 g of the powder add 10 ml of ether, stoppered tightly, shake for 10 minutes, filter, collect the filtrate as the test solution. Prepare a solution of 0.1 g of Sanguis Draxonis reference drug in the same manner as the reference drug solution. Carry out the method for thin layer chromatography (Appendix Ⅵ B), using silica gel G as the coating substance and a mixture of chloroform-methanol (19 : 1) as the mobile phase. Apply separately to the plate 10-20 μl of each of the test solution, reference drug solution and dracorhodin perchlorate CRS solution (as the reference solution, see Assay). After developing and removal of the plate, dry in air. The orange spot in the chromatogram obtained with the test solution corresponds in position and colour to the spot in the chromatogram obtained with the reference drug solution and reference solution.

(3) To about 0.5 g of the coarse powder add 10 ml of ether, stoppered tightly, shake for 10 minutes, filter, add 5 ml of dilute hydrochloric acid to the filtrate, mix well, a brownish-yellow precipitate is separated out, allow to stand for a while, then turn into brownish-black resin-like substance gradually. Wash the resin-like substance with 10 ml of hydrochloride acid for several times, discard the washings, add 10 ml of 20% potassium hydroxide, grind, add 5 ml of chloroform and then transfer to a separating funnel, shake, chloroform layer turns red, take the chloroform layer as the test solution. Prepare a solution of Sanguis Draxonis reference drug in the same manner, and use it as the reference drug solution. Carry out the method for thin layer chromatography (Appendix Ⅵ B), using silica gel G as the coating substance and a mixture of chloroform-methanol (19 : 1) as the mobile phase. Apply separately to the plate 10-20 μl of each of the two solutions. After developing and removal of the plate, dry in air. The orange spot in the chromatogram obtained with the test solution corresponds in position and colour to the spot in the chromatogram obtained with the reference drug solution.

Total ash Not more than 6.0 per cent (Appendix Ⅸ K).

Rosin To 0.1 g of the powder in a stoppered tube add 10 ml of petroleum ether (60-90℃), shake for several minutes, filter. Transfer 5 ml of the filtrate to another tube, add 5 ml of newly-prepared 0.5% copper acetate solution, stand for a while, separate into two layers, the petroleum ether layer should not show green colour.

Ethanol-insoluble matter Weigh accurately about 2 g of the powder in a weighed filter paper tube, put into Soxhlets extractor, add 200-400 ml of ethanol, reflux untill the extract is colourless. Take out the filter paper tube, evaporate the ethanol, dry at 105℃ for 4 hours, weigh accurately and calculate, not more than 25.0%.

Assay Carry out the method for high performance liquid chromatography (Appendix Ⅵ D).

Chromatographic system and system suitability Use octadecylsilane bonded silica gel as the stationary phase and acetonitrile-0.05 mol/L sodium dihydrogen phosphate solution (50 : 50) as the mobile phase. As detector a spectrophotometer set at 440 nm; column temperature is 40℃. The number of theoretical plates of the column is not less than 4000, calculated with the reference to the peak of dracorhodin.

Reference solution Weigh accurately 9 mg of dracorhodin perchlorate CRS in a 50 ml brown volumetric flask, add 10 ml of 3% phosphoric acid in methanol to dissolve and dilute to the volume, mix well, and use as the reference solution (containing 26 μg of dracorhodin per ml, the weight of dracorhodin is equivalent to 1/1.377 of the weight of dracorhodin perchlorate).

Test solution Weigh accurately 0.05-0.15 g of the powder in a stopper flask, add accurately 10 ml of the 3% phosphoric acid in methanol, stopper tightly, shake for 3 minutes, filter, discard the initial filtrate, transfer accurately 1 ml of the successive filtrate to a 5 ml brown volumetric flask, add methanol and dilute to the volume and use as the test solution.

Procedure Inject accurately 10 μl of each of the reference solution and the test solution, respectively, into the column, determine and calculate the content.

It contains not less than 1.0% of dracorhodin ($C_{17}H_{14}O_3$).

Processing Eliminate the dust, break into small pieces or grind into fine powder.

Action To eliminate blood stasis and assuage pain, arrest bleeding and promote the growth of muscles.

Indications Traumatic injuries and fracture due to tumble, internal injury with blood stasis and pain; unremitting bleeding due to traumatism.

Usage and dosage 1-2 g; ground into powder, or used in pills. For external use, appropriate quantity is ground into powder or prepared into plaster for topical application.

Storage Preserve in a cool and dry place.

Sargassum (海藻, Haizao)

Seaweed

Seaweed is the dried alga of *Sargassum pallidum* (Turn.) C. Ag. or *Sargassum fusiforme* (Harv.) Setch. (Fam. Sargassaceae). The former is commonly known as "Dayehaizao" and the latter is known as "Xiaoyehaizao". The drug is collected in summer and autumn, removed from foreign matter, washed clean, and dried in the sun.

Description *Dayehaizao* Crumpled and rolled, blackish-brown, some showing white frost-like powder, 30-60 cm long, the stem-like stipe cylindrical, with conical protrudings. Main branchings dichotomous, lateral branchings giving off from the axils of blades bearing on main branchings, with short spiny protrudings. The blades of primary segments lanceolate or obovate, 5-7 cm long, about 1 cm wide, margin entire or dentate. The blades of secondary segments slat-shaped or lanceolate, with small branchings bearing slat-

shaped segments in the axils of blades. Air bladders blackish-brown, spheroidal or ovoid, some with stalks, apex obtuse-rounded, sometimes mucronate. Texture fragile, soft when moistened, swollen, fleshy and lubricant on soaking in water. Odour, seafood-like; taste, slightly salty.

Xiaoyehaizao Slightly small, 15-40 cm long, lateral branchings alternate, without spiny protrudings, blades slat-shaped or spatulate, apex slightly swollen, hollowed, air bladders axillary, fusiform or spheroidal, with relatively long stalks. Texture relatively hard.

Identification Macerate 1 g of the small pieces in 20 ml of water for several hours and filter. Evaporate the filtrate to about 3-5 ml, add 3 drops of ferric chloride TS; a brown precipitate is produced.

Processing Eliminate foreign matter, wash clean, dry in the air briefly, cut into sections, and dry in the sun.

Action To soften indurated mass, eliminte *phlegm* and dissipate nodulation, and induce urination.

Indications Goiter, scrofula, swelling and pain of the testes; edema.

Usage and dosage 6-12 g.

Storage Preserve in a dry place.

Scolopendra
(蜈蚣, Wugong)

Centipede

Centipede is the dried body of *Scolopendra subspinipes mutilans* L. Koch (Fam. Scolopendridae). The animal is captured in spring or summer, stretched by a bamboo piece inserted through the head to tail, and dried.

Description Flattened slat-shaped, 9-15 cm long, 0.5-1 cm wide. Consisting of head and trunk, the whole body containing 22 segments. The head dark red or reddish-brown, somewhat lustrous, covered with a head plate; the head plate subspherical, anterior end slightly projecting, bearing a pair of maxillipeds and a pair of antennae on both sides. The first dorsal plate of the trunk as same as the head plate in colour, the other 20 notums brownish-green or blackish-green, lustrous, usually with 2 longitudinal furrowed lines from the 4th to the 20th; venter light yellow or brownish yellow, wrinkled; each segment bearing a pair of walking legs from the 2nd segment; the walking legs yellow or reddish-brown, occasionally yellowish white, hook-like, the last pair of the walking legs tail-like, also known as uropod, easily fallen off. Texture fragile, fracture with crevices. Odour, slightly stinking, with characteristic smell irritating the nose; taste, pungent, slightly salty.

Total ash Not more than 5.0 per cent (Appendix Ⅸ K).

Extractives Carry out the method for determination of ethanol-soluble extractives (Appendix Ⅹ A, the hot extraction method), using dilute ethanol as the solvent, not less than 20.0 per cent.

Processing Remove bamboo slip, wash clean, gently roast by small fire until yellow, cut into sections.

Action To relieve convulsion, counteract poisons and cause subsidence of nodulation, and remove obstruction of collaterals and alleviate pain.

Indications Infantile convulsion, tetanus, apoplectic hemiplegia; chronic rheumatic or rheumatoid arthritis; sores, lymphadenitis, venomous snake-bite.

Usage and dosage 3-5 g.

Precaution Contraindicated in pregnancy.

Storage Preserve in a dry place, protected from mould and moth.

Scorpio
(全蝎, Quanxie)

Scorpion

Scorpion is the dried body of *Buthus martensii* Karsch (Fam. Buthidae). The drug is collected from the end of spring to the beginning of autumn, removed from soil, boiled in water or salt water until the body stiffened, scooped out, placed in a ventilated place, and dried in shade.

Description The cephalothorax and preabdomen flattened long ellipsoidal, the postabdomen tail-like, shrunken and curved. The body of intact specimen about 6 cm long, the cephalothorax greenish-brown, the anterior part arising 1 pair of short and small chelicerae and 1 pair of long and large pincerlike pedipalps in the shape of crab pincers, dorsal part covered with ladder-shaped carapace, ventral part bearing 4 pairs of walking legs, each of 7 segments, with 2 claws on distal end. The preabdomen consists of 7 segments, the seventh dark in colour, with 5 ridged spinal lines on the dorsal plate. Dorsal side greenish-brown, the postabdomen brownish-yellow, 6 segments, with longitudinal furrows on each segment, the telson bearing sharp claw like stinger and no spur below the stinger. Odour, slightly stinking; taste, salty.

Extractives Carry out the method for determination of ethanol-soluble extractives (Appendix Ⅹ A, the hot extraction method), using dilute ethanol solvent, not less than 20.0 per cent.

Processing Eliminate foreign matter, wash clean and dry.

Action To relieve convulsion, counteract poisons and reduce nodulation, remove obstructions from the collaterals, and relieve pain.

Indications Infantile convulsion; twitching, spasm; apoplectic hemiplegia; tetanus; chronic arthritis; headache or migraine; sores; scrofula.

Usage and dosage 3-6 g.

Storage Preserve in a dry place, protected from moth.

Semen Abutili
(苘麻子, Qingmazi)

Chingma Abutilon Seed

Chingma Abutilon Seed is the dried ripe seed of *Abutilon theophrastii* Medic. (Fam. Malvaceae). The fruit is collected in autumn when ripe, dried in the sun, and the seed is gathered, removed from foreign matter.

Description Triangular reniform, 3.5-6 mm long, 2.5-4.5

mm wide, 1-2 mm thick. Externally greyish-black or dark brown, bearing sparse white tomenta, a subelliptical hilum dented, pale brown, radially striated. Testa hard, cotyledons 2, folded, oily. Odour, slight; taste, weak.

Identification Transverse section: Epidermal cells 1 layer, flattened-rectangular, sometimes differentiated to unicellular non-glandular hairs; hypodermal cells 1 layer, slightly radially prolated. Palisade cells 1 row, cylindrical, up to about 88 μm long, very thick-walled, linear lumina visible at the upper part, the terminal end expended, containing small globular crystals. Pigment cells 4-5 layers, containing yellowish-brown or reddish-brown contents. Cells of endosperm and cotyledons containing fatty oil droplets and aleurone grains, cells of cotyledons also containing a few of fine clusters of calcium oxalate.

Action To remove *heat* and *damp*, counteract toxicity, and cure nebula.

Indications Dysentery with bloody purulent stools; urinary infection with painful difficult urination; carbuncles and boils; nebula.

Usage and dosage 3-9 g.

Storage Preserve in a cool and dry place.

Semen Aesculi (娑罗子, Suoluozi)

Buckeye Seed

Buckeye Seed is the dried ripe seed of *Aesculus chinensis* Bge., *Aesculus chinensis* Bge. var. *chekiangensis* (Hu et Fang) Fang or *Aesculus wilsonii* Rehd. (Fam. Hippocastanaceae). The drug is collected in autumn when ripe, removed from pericarp, dried in the sun or at a lower temperature.

Description Oblate or subspherical, resembling chestnut, 1.5-4 cm in diameter. Externally brown or dark brown, frequently shrunken, somewhat lustrous; hilum light in colour, subrounded, occupying about ¼-½ in area of the seed, with a stripe of projecting raphe on one side, sometimes indistinct. Testa hard and fragile, cotyledons 2, thick and hard, resembling the kernel of chestnut, yellowish-white or pale brown, starchy. Odour, slight; taste, bitter then sweet.

Identification The four major peaks in the chromatogram of reference solution obtained in monograph 'Assay' are aescine A, aescine B, aescine C and aescine D in turn. The reserving time of the major peaks obtained with the test solution correspond with the four major peaks of sodium aescine CRS.

Water Carry out the method as described under the determination of water (Appendix Ⅸ H, method 1), not more than 13.0 per cent.

Total ash Not more than 5.0 per cent (Appendix Ⅸ K).

Assay Carry out the method for high performance liquid chromatography (Appendix Ⅵ D).

Chromatographic system and system suitability Use octadecylsilane bonded silica gel as the stationary phase and a mixture of acetonitrile and 0.1% phosphoric acid (36 : 64) as the mobile phase. As detector a spectrophotometer set at 220 nm. The number of theoretical plates of the column is not less than 3000, calculated with the reference to the peak of aescine A.

Reference solution Weigh accurately a quantity of sodium aescine CRS (the content of aescine A marked) in methanol to produce a solution containing 1 mg per ml as the reference solution.

Test solution Weigh accurately 1 g of the powder (through No. 3 sieve) to a Soxhlet's extractor, heat under reflux in ether for 1 hour, then discard ether, and evaporate the ether to dryness. Transfer the residue to a stopper conical flask, add 50 ml of methanol accurately, weigh, and ultrasonicate (power, 250 W; frequency, 33 kHz) for 30 minutes, cool and weigh again, replenish the loss of the solvent with methanol and mix well, filter. Measure accurately 10 ml of the filtrate into a evaprating dish. heat on a water bath at 40℃ and concentrate to suitable volume, transfer into a 10 ml of volumetric flask, add methanol to volume, and mix well.

Procedure Inject accurately 10 μl of the reference solution and 10 μl of the test solution into the column, respectively, and calculate the content corresponded in position with the reference solution of aescine A.
It contains not less than 0.70 per cent of aescine A ($C_{55}H_{86}O_{24}$), calculated with reference to the dried drug.

Processing Remove the outer coat and foreign matter. Break into pieces before use.

Action To regulate the flow of *qi*, normalize the stomach function and relieve pain.

Indications Distress in the chest, distension in the abdomen, epigastric pain.

Usage and dosage 3-9 g.

Storage Preserve in a dry place, protected from mould and moth.

Semen Allii Tuberosi (韭菜子, Jiucaizi)

Tuber Onion Seed

Tuber Onion Seed is the dried ripe seed of *Allium tuberosum* Rottl. (Fam. Liliaceae). The infructescence is collected in autumn when the fruit is ripe, dried in the sun, and the seed is gathered, removed from foreign matter.

Description Semi-spheroidal or semi-ovoid, slightly flattened, 2-4 mm long, 1.5-3 mm wide. Externally black, one side protruding, rough, with fine reticulated wrinkles, the other side slightly dented, wrinkles relatively indistinct. Apex obtuse, base slightly acute with a prominent, dotted hilum. Texture hard. Odour, characteristic; taste, slightly pungent.

Processing *Semen Allii Tuberosi* Eliminate foreign matter.

Semen Allii Tuberosi (*processed with salt*) Stir-bake the clean Semen Allii Tuberosi as described under the method for processing with salt water (Appendix Ⅱ D) to dry.

Action To tonify the liver and the kidney, promote virility, and arrest spontaneous emission.

Indications Impotence, seminal emission, aching of the loins and knee; enuresis, frequent urination; morbid leukorrhea.

Usage and dosage 3-9 g.

Storage Preserve in a dry place.

Semen Alpiniae Katsumadai (草豆蔻, Caodoukou)

Katsumada Galangal Seed

Katsumada Galangal Seed is the dried almost ripe seed of *Alpinia katsumadai* Hayata (Fam. Zingiberaceae). The fruit is collected in summer and autumn, dried in the sun to near dryness, or treated briefly in boiling water and half dried in the sun, removed from pericarp. The seed masses are gathered, and dried in the sun.

Description Seed masses subspheroidal, 1.5-2.7 cm in diameter. Externally greyish-brown, somewhat smooth, with yellowish-white septa in central part dividing the masses into 3 groups, each having numerous seeds, agglutinated closely. Seeds ovoid-polyhedral, 3-5 mm long, about 3 mm in diameter, covered with brownish membranous aril, raphe occurring as a longitudinal furrow, hilum present at one end; texture hard, on cutting in half longitudinally along the raphe, the seed showing oblique-cordate in shape in longitudinal view, testa extending inward along the raphe and occupying about 1/2 of the surface area; endosperm greyish white. Odour, aromatic; taste, pungent and slightly bitter.

Identification (1) Transverse section: Sometimes remains of aril present, consisting of polygonal thin-walled cells. Epidermal cells of testa subrounded, walls relatively thickened; hypodermis consisting of 1-3 layers of parenchymatous cells, slightly elongated tangentially; pigment layer consisting of several layers of brown cells, scattered with 1-2 layers of subrounded oil cells, about 50 μm in diameter; endotesta consisting of 1 layer of palisade sclerenchymatous cells, brownish-red, with heavily thickened inner and lateral walls and a small lumen containing sillica bodies. Cells of perisperm containing starch granules, prisms and a few small clusters of calcium oxalate. Cells of endosperm containing aleurone grains.

Powder: Yellowish-brown. Epidermal cells of testa stripe-shaped in surface view, up to 30 μm in diameter, slightly thick-walled, usually vertical to hypodermal cells; hypodermal cells prolatepolygonal or subrectangular in surface view. Pigment cells shrivelled with indistinct layer border, containing reddish-brown contents, and mostly broken into irregular masses of pigment. Oil cells scattered among the layers of pigment cells, subrounded or oblong and containing yellowish-green oily contents. Sclerenchymatous cells of endotesta yellowish-brown or reddish-brown, polygonal in surface view, with thickened and unlignified walls, and lumina containing silica bodies; 1 layer and palisade-like in section view, with heavily thickened inner and lateral walls and lumina outward eccentric, containing silica bodies. Cells of perisperm filled with masses of starch granules, some containing fine prisms of calcium oxalate. Cells of endosperm containing aleurone grains and fixed oil droplets.

(2) To 1 g of the powder add 5 ml of methanol, heat on a water bath with shaking for 5 minutes, filter, and the filtrate used as the test solution. Dissolve alpinetin CRS and cardamonin CRS in methanol to produce a solution containing 2 mg per ml as the reference solution. Carry out the method for thin layer chromatography (Appendix Ⅵ B), using silica gel G as the coating substance and a mixture of benzene, ethyl acetate and methanol (15 : 4 : 1) as the mobile phase. Apply separately to the plate 5 μl of each of two solutions. After developing and removal of the plate, dry in air, heat at 100℃ until the spots appear, and examine under ultraviolet light at 365 nm. The pale blue fluorescent spot in the chromatogram obtained with the test solution corresponds in position and colour to the spot due to alpinetin in the chromatogram obtained with the reference solution. Then spray with 5% ferric chloride in ethanol, the brown spot in the chromatogram obtained with the test solution corresponds in position and colour to the spot due to cardamonin in the chromatogram obtained with the reference solution.

Assay Carry out the method for determination of volatile oil (Appendix Ⅹ D).

It contains not less than 1.0 per cent (ml/g) of volatile oil.

Processing Eliminate foreign matter. Break into pieces before use.

Action To remove *damp*, invigorate the spleen function, warm the stomach and arrest vomiting.

Indications Accumulation of *damp-cold* in the spleen and the stomach manifested by epigastric distension, pain and cold feeling accompanied with belching, nausea, vomiting and anorexia.

Usage and dosage 3-6 g.

Storage Preserve in a cool and dry place.

Semen Arecae (槟榔, Binglang)

Areca Seed

Areca Seed is the dried ripe seed of *Areca catechu* L. (Fam. Palmae). The ripe fruit is collected from late spring to early autumn, boiled in water, dried, removed from pericarp, and the seed is collected, then dried.

Description Oblate or conical, 1.5-3.5 cm high, base 1.5-3 cm in diameter. Externally pale yellowish-brown or pale reddish-brown, with slightly dented reticulate furrow, and a rounded concave micropyle in the centre of the base, by side with an obvious scar-shaped hilum. Texture hard, uneasily broken; fracture showing marble-like striations alternated with brown testa and white endosperm. Odour, slight; taste, astringent and slightly bitter.

Identification (1) Transverse section: Outer layers of testa consisting of several rows of flattened stone cells, elongated tangentially, containing reddish-brown contents, stone cells varying in shape and size, often having intercellular space; inner layers of testa consisting of several layers of parenchymatous cells, containing reddish-brown contents, and a few vascular bundles scattered. Perisperm relatively narrow; inner layers of testa with perisperm often inserting into endosperm, forming crisscross tissue. Endosperm cells white, polygonal, walls thickened, pits large, containing oil droplets and aleurone grains.

(2) To 8 g of the powder, add 4 ml of concentrated ammonia TS and 50 ml of chloroform, ultrasonicate for 10 minutes, and filter. Wash the residue with 10 ml of chloroform, combine the chloroform solutions, then transfer to a separator, add 5 ml of dilute hydrochloric acid TS and 20 ml of water, and shake. Separate the water layer. Wash with 10 ml of chloroform, discard the washings, add concentrated ammonia TS to pH 9, and extract with 2 quantities, each of 10 ml, of chloroform. Combine the chloroform solutions, and evaporate to dryness. Dissolve the residue in 1 ml of methanol, used as the test solution. Prepare a solution of

Semen Arecae reference drug in the same manner as the reference drug solution. Carry out the method for thin layer chromatography (Appendix Ⅵ B), using silica gel G as the coating substance and cyclohexane, ethyl acetate and concentrated ammonia TS (7.5 : 7.5 : 0.2) as the mobile phase. Apply separately to the plate 5 μl of each of the two solutions. After developing in a chamber pre-equilibrated with ammonia vapor and removal of the plate, dry in hot air, and spray with dilute potassium iodobismuthate TS. The orange-red spot in the chromatogram obtained with the test solution corresponds in position and colour to the spot in the chromatogram obtained with the reference drug solution.

Water Not more than 10.0 per cent (Appendix Ⅸ H, method 1).

Assay Place about 8 g, weighed accurately, of the coarse powder in a conical flask with a stopper, add 80 ml of ether and shake. Add 4 ml of ammonia TS, shake for 10 minutes, add 10 g of anhydrous sodium sulfate, shake again for 5 minutes, allow to stand. Transfer the ether solution to a separator, wash the residue with 3 quantities, each of 10 ml, of ether. Combine the ether solutions, add 0.5 g of talc powder, shake for 3 minutes, add 2.5 ml of water, shake for 3 minutes. Allow to stand until the supernatant ether solution is clear. Separate the ether solution, wash the water layer with a small quantity of ether, combine the ether solutions and evaporate to about 20 ml at a lower temperature. Transfer the ether solution to a separator, add accurately 20 ml of sulfuric acid (0.01 mol/L) VS, shake and allow to stand. Separate the ether layer, wash with 3 quantities of 5 ml of water. Combine the washings and the acid solution, filter, wash the filter with water. Combine the washings and the acid solution, add several drops of methyl red IS, titrate with sodium hydroxide (0.02 mol/L) VS. Each ml of sulfuric acid (0.01 mol/L) VS is equivalent to 3.104 mg of $C_8H_{13}NO_2$.
It contains not less than 0.30% of ether-soluble alkaloids, calculated as arecoline ($C_8H_{13}NO_2$), with reference to the dried drug.

Processing *Semen Arecae* Eliminate foreign matter, soak, soften thoroughly, cut into thin slices, and dry in the shade.

Semen Arecae (*stir-baked*) Stri-bake the slices of Semen Arecae as described under the method for simple stir-baking (Appendix Ⅱ D) until a slightly yellow colour is produced.

Action To kill worms, remove undigested food, subdue the upward *qi*, promote the flow of fluid, and stop malarial attacks.

Indications Taeniasis, ascariasis, fasciolopsiasis; abdominal pain due to intestinal parasitosis; diarrhea and tenesmus due to accumulation of undigested food; edema and weakness of the legs; malaria.

Usage and dosage 3-9 g; for the treatment of taeniasis and fasciolopsiasis, 30-60 g.

Storage Preserve in a ventilated and dry place, protected from moth.

Semen Arecae Praepareta (焦槟榔, Jiaobinglang)

Charred Areca Seed

Charred Areca Seed is the processed product of Areca Seed.

Processing Stir-bake the slices of Semen Arecae as described under the method for simple stir-baking (Appendix Ⅱ D) until a charred yellow colour is produced.

Description Sub-rounded slices, 1.5-3 cm in diameter, 1-2 mm thick. Externally charred yellow, marmoration visible. Texture fragile, easily broken. Odour, light; taste, astringent and slightly bitter.

Identification (1) Powder: charred yellow. Endosperm cells extremely numerous, mostly broken, colourless, when whole, irregular polygonal or subsquare, intercellular layer somewhat indistinct, 56-112 μm in diameter, walls 6-11 μm thick, pits relatively numerous, extremely great, subrounded or rectangle-rounded, 8-19 μm in diameter. Perisperm cells subsquare, subpolygonal or strip-shaped, 40-72 μm in diameter, walls about 8 μm thick, pit-canals visible, most lumina filled with reddish-brown to dark brown substance. Stone cells of testa spindle-shaped, polygonal, 24-64 μm in diameter, walls 5-12 μm thick, pale yellowish-brown, pits few, slit-like, some lumina filled with reddish-brown substance. Spiral or reticulate vessels occasionally visible, 8-16 μm in diameter.
(2) Complies with the Identification test (2) described under Semen Arecae.

Action To promote digestion and relax bowels.

Indications Retention of undigested food, dysentery with tenesmus.

Usage and dosage 3-9 g.

Storage As described under Semen Arecae.

Semen Armeniacae Amarum (苦杏仁, Kuxingren)

Bitter Apricot Seed

Bitter Apricot Seed is the dried ripe seed of *Prunus armeniaca* L. var. *ansu* Maxim., *Prunus sibirica* L., *Prunus mandshurica* (Maxim.) Koehne or *Prunus armeniaca* L. (Fam. Rosaceae). The fruit is collected in summer and the seed is removed from the pulp and the shell, and dried in the sun.

Description Flattened-cordate, 1-1.9 cm long, 0.8-1.5 cm wide, 5-8 mm thick. Externally yellowish-brown to deep brown, acute at one end, plump and unsymmetrical and rounded at the other end. A short-linear hilum situated at the acute end and a chalaza at the rounded end with numerous upwards deep-brown veins. Testa thin; cotyledons 2, milky-white, oily. Odour, slight; taste, bitter.

Identification (1) Grind several grains of the drug with water, a characteristic odour of benzaldehyde is perceptible.
(2) Break several grains of the drug to pieces and immediately place about 0.1 g into a test tube, moisten with several drops of water, hang a strip of trinitrophenol TP and stopper tightly. Heat on a warm water bath for 10 minutes, the test paper turns to a brick red colour.
(3) To 1 g, add 50 ml of ether, heat under reflux for 1 hour, and discard the ether solution. Wash the residue with 25 ml of ether, then evaporate to dryness, add 30 ml of methanol, and heat under reflux for 30 minutes. Cool to room temperature, filter, and use the filtrate as the test solution. Dissolve a quantity of amygdalin CRS in methanol to prepare a solution containing 2 mg per ml as the reference solution. Carry out the method for thin layer chromatography (Appendix Ⅵ B), using silica gel G as the coating substance and the lower layer of chloroform, ethyl acetate, methanol and water (15 : 40 : 22 : 10), on standing at 5-10℃ for 12

hours, as the mobile phase. After developing and removal of the plate, spray immediately with a solution of phosphomolybdic acid in sulfuric acid (to 2 g of phosphomolybdic acid, add 20 ml of water to dissolve, then add slowly 30 ml of sulfuric acid, and mix well), and heat at 105℃ for about 10 minutes. The spot in the chromatogram obtained with the test solution corresponds in position and colour to the spot in the chromatogram obtained with the reference solution.

Peroxide value Carry out the method for the limit test of rancidity (Appendix Ⅸ P), not more than 0.11.

Assay Place about 15 g of the coarse powder, accurately weighed, in a kjeldahl flask, add 150 ml of water, stopper tightly and immediately, warm on a water bath at 37℃ for 2 hours. Connect the condenser, distill and collect the distillate in a receiver containing 10 ml of water and 2 ml of ammonia TS and cool on an ice bath. Stop the distillation when the distillate is up to 60 ml, add 2 ml of potassium iodide TS to the distillate, and titrate with silver nitrate (0.1 mol/L) VS slowly until a yellowish-white opalescence is produced. Each ml of silver nitrate (0.1 mol/L) VS is equivalent to 91.48 mg of $C_{20}H_{27}NO_{11}$.
It contains not less than 3.0 per cent of amygdalin ($C_{20}H_{27}NO_{11}$).

Processing *Semen Armeniacae Amarum* Eliminate foreign matter. Break to pieces before use.

Semen Armeniacae Amarum (*rinsed in boiling water*) Peel the clean Semen Armeniacae Amarum as described under the method for rinsing in boiling water (Appendix Ⅱ D). Break to pieces before use.

Semen Armeniacae Amarum (*stir-baked*) Stir-bake the Semen Armeniacae Amarum (rinsed in boiling water) as described under the method for simple stir-baking (Appendix Ⅱ D) until it becomes yellow. Break to pieces before use.

Assay Weigh accurately about 15 g of the coarse powder in a kjeldahl flask, add accurately 4 g of coarse powder of the crude Semen Armeniacae Amarum, and then add 150 ml of water, stopper tightly immediately, warm on a water bath at 37℃ for 2 hours. Connect the condenser, distill and collect the distillate in a receiver containing 10 ml of water and 2 ml of ammonia TS and cool on an ice bath untill the distillate up to 60 ml, stop distilling, add 2 ml of potassium iodide TS to the distillate, and titrate with silver nitrate (0.1 mol/L) VS slowly untill a yellowish-white opalescence is produced. In addition, weigh accurately about 15 g of the coarse powder of the crude Semen Armeniacae Amarum, add 150 ml of water, titrate as the same manner, use as correction. Each ml of silver nitrate (0.1 mol/L) VS is equivalent to 91.48 mg of amygdalin ($C_{20}H_{27}NO_{11}$).
It contains not less than 3.0 per cent of amygdalin ($C_{20}H_{27}NO_{11}$).

Action To relieve cough and asthma, and relax bowels.

Indications Cough and asthma accompanied with stuffiness in the chest and profuse expectoration; constipation due to deficiency of blood and fluid.

Usage and dosage 4.5-9 g, decocted later.

Precaution Overdosage may cause intoxication.

Storage Preserve in a cool and dry place, protected from moth.

Semen Astragali Complanati (沙苑子, Shayuanzi)

Flatstem Milkvetch Seed

Flatstem Milkvetch Seed is the dried ripe seed of *Astragalus complanatus* R. Br. (Fam. Leguminosae). The plant is collected in late autumn and early winter when the fruit is ripe but not dehiscent, dried in the sun, and the seed tapped out, removed from foreign matter, and dried in the sun.

Description Somewhat reniform, slightly flattened, 2-2.5 cm long, 1.5-2 mm wide, about 1 mm thick. Externally smooth, brownish-green or greyish-brown, with a rounded hilum located on one slightly dented edge. Texture hard, uneasily broken. Cotyledons 2, pale yellow, radicle curved, about 1 mm long. Odour, slight; taste, weak and bean-like on chewing.

Identification Break 1 g of the drug to pieces, add 10 ml of ether, heat under reflux on a warm water bath for 10 minutes, filter and discard the ether solution. Heat the residue to expel ether, add 5 ml of methanol, heat under reflux for 10 minutes and filter. Spot 1 drop of the filtrate on a piece of filter paper, examine under ultra-violet light at 365 nm; a purplish-red fluorescence is shown. Add 2 drops of methanol and allow the spot to disperse, a brilliant yellow ring is shown inside the purplish-red fluorescent ring.

Processing *Semen Astragali Complanati* Eliminate foreign matter, wash and dry.

Semen Astragali Complanati (*processed with salt*) Stir-bake the clean Semen Astragali Complanati as described under the method for stir-baking with salt-water (Appendix Ⅱ D) to dryness.

Action To benefit the liver and the kidney, arrest seminal discharge, restrain urination and improve eyesight.

Indications Back pain, nocturnal emission and premature ejaculation in deficiency syndromes of the kidney; turbid discharge with urination, excessive leukorrhea; dribbling of urine after urination; dizziness and blurred vision.

Usage and dosage 9-15 g.

Storage Preserve in a ventilated and dry place.

Semen Canavaliae (刀豆, Daodou)

Jack Bean

Jack Bean is the dried ripe seed of *Canavalia gladiata* (Jacq.) DC. (Fam. Leguminosae). The fruit is collected in autumn when ripe, and the seed is gathered, and dried in the sun.

Description Flattened-ovoid or flattened-reniform, 2-3.5 cm long, 1-2 cm wide, 0.5-1.2 cm thick. The outer surface pale red to reddish-purple, slightly shrunken, somewhat lustrous. A black eyebrow-shaped hilum occurred at the edge, about 2 cm long, exhibiting 3 white fine striations. Texture hard, uneasily broken. Testa coriaceous, the inner surface brownish-green, lustrous; cotyledons 2, yellowish-white, oily. Odour, slight; taste, weak, bean-like on chewing.

Identification Transverse section: Epidermis of 1 layer of palisad cells, 2 layers at hilum, with cuticle, light bend distinct. Supporting cells of 2-6 layers, dumbell-shaped. Nutritive layer consisting of more than 10 layers of parenchymatous cells, tangentially elongated, the inner ones obiterate. Vascular bundles visible, several layers of cells of cotyledons located under testa, polygonal containing numerous starch granules. Tracheid islet elliptical, walls reticularly thickened, bordered pits few, surrounded by 4-5 layers of

parenchymatous cells, with stellate tissue at two sides, cells stellate, with large inter cellular space.

Processing Eliminate foreign matter. Break into pieces before use.

Action To warm the stomach and check its upward adverse movement.

Indications Hiccup and vomiting of *deficiency-cold* type.

Usage and dosage 6-9 g.

Storage Preserve in a ventilated and dry place, protected from moth.

Semen Cassiae (决明子, Juemingzi)

Cassia Seed

Cassia Seed is the dried ripe seed of *Cassia obtusifolia* L. or *Cassia tora* L. (Fam. Leguminosae). The ripe legume is collected in autumn and dired in the sun, then the seed is tapped out and removed from foreign matter.

Description *Semen Cassiae Obtusifoliae* Slightly rhomboidal-cuboid or shortly cylindrical, both ends pararell and oblique, 3-7 mm long, 2-4 mm wide. Externally greenish-brown or dark brown, smooth and lustrous. One end relatively even, the other end oblique and acuminate, dorsal and ventral surfaces exhibiting a raised rib respectively, with an obliquely symmetrical and paler-coloured dented line on each side of a rib. Texture hard and uneasily broken. Testa thin, cotyledons 2, yellow, S-shaped. Odour, slight; taste, slightly bitter.

Semen Cassiae Torae Shortly cylindrical, relatively small, 3-5 mm long, 2-3 mm wide, with broad yellowish-brown bands on both sides of the rib.

Identification (1) Powder: Yellowish-brown. Palisade cells of testa colourless or pale yellow, one row of cells in section, rectangular, arranged slightly disorderly, 42-53 μm long, walls relatively thickened, with two streaks of light bands; subpolygonal in surface view, walls somewhat shrunken. Supporting cells of testa subrounded in surface view, 10-35 (55) μm in diameter, two central circles visible. The fragments of cuticle 11-19 μm thick. Clusters of calcium oxalate numerous, mostly existing in parenchymatous cells, 8-21 μm in diameter.

(2) To 0.5 g of the powder add 20 ml of dilute sulfuric acid and 10 ml of chloroform, heat gently under reflux for 15 minutes. Allow to cool, transfer to a separator. Separate the chloroform layer and shake with 10 ml of sodium hydroxide TS, allow to stand; a red colour is produced in aqueous layer. If a brown colour is produced, add 1-2 drops of hydrogen peroxide TS to the separated aqueous layer and heat for 4 minutes in a water bath, a red colour is produced.

(3) Macerate 1 g of the powder with 10 ml of methanol for 1 hour, fliter, evaporate the filtrate to dryness, dissolve the residue with 10 ml of water, add 1 ml of hydrochloric acid, heat on a water bath for 30 minutes, cool immediately, extracted with two quantities, each of 20 ml, of ether, combined the test solution, evaporate to dryness, dissolve the residue with 1 ml of chloroform as the test solution. Dissolve emodin and chrysophanol CRS with ethanol to produce a solution containing each of 1 mg per ml as the reference solution. Carry out the method for thin layer chromatography (Appendix Ⅵ B), using silica gel H containing sodium carboxymethylcellulose as the coating substance and petroleum ether (30-60℃), ethyl formate and formic acid (15 : 5 : 1) as the mobile phase. After developing and removal of the plate, dry in air, examine under ultraviolet light at 365 nm. The orange fluroscent spots in the chromatogram obtained with the test solution correspond in positon and colour to the spots in the chromatogram obtained with the reference solution. The spots turn to red on exposure to ammonia vapour.

Total ash Not more than 5.0 per cent (Appendix Ⅸ K).

Assay Carry out the method for high performance liquid chromatography (Appendix Ⅵ D).

Chromatographic system and system suitability Use octadecylsilane bonded silica gel as the stationary phase and a mixture of methanol and 0.1% phosphoric acid (85 : 15) as the mobile phase. As detector a spectrophotometer set at 254 nm. The number of theoretical plates of the column is not less than 3000, calculated with the reference to the peak of chrysophanol.

Reference solution To a quantity of chrysophanol CRS, accurately weigh, add a mixture of dehydrated ethanol and ethyl acetate (2 : 1). Produce a solution containing 20 μg per ml as the reference solution.

Test solution Weigh accurately 0.5 g of the powder (through No. 3 sieve) in a stopper conical flask, add 50 ml of methanol accurately and weigh. Heat under reflux for 20 minutes on a water bath, cool and weigh accurately again, replenish the loss of the solvent with methanol, mix well, and filter. Measure accurately 25 ml of the filtrate and evaporate the filtrate to dryness. Add 10% hydrochloric acid to the filtrate. Heat for 1 hour on a water bath and cool immediately. Extract the filtrate with four 30-ml quantities of chloroform. Combine chloroform extract, reclaim the solvent on a water bath, and evaporate to dryness. Dissolve the residue with a mixture of dehydrated ethanol and ethyl acetate (2 : 1) to a 10 ml volumetric flask. Dilute with the same solvent to volume, mix well, and filter.

Procedure Inject accurately 10 μl of the reference solution and 10 μl of the test solution into the column, respectively, and calculate the content.

It contains not less than 0.080 per cent of chrysophanol ($C_{15}H_{10}O_4$), calculated with reference to the dried drug.

Processing *Semen Cassiae* Eliminate foreign matter, wash clean and dry. Break into pieces before use.

Semen Cassiae (*stir-baked*) Stir-bake the clean Semen Cassiae as described under the method for simple stir-baking (Appendix Ⅱ D) until slightly scented. Break into pieces before use.

Action To remove *heat*, improve eyesight, and relax bowels.

Indications Inflammation of the eyes with pain, photophobia and lacrimination; headache, dizziness, blurred vision and constipation.

Usage and dosage 9-15 g.

Storage Preserve in a dry place.

Semen Celosiae (青葙子, Qingxiangzi)

Feather Cockscomb Seed

Feather Cockscomb Seed is the dried ripe seed of *Celosia argentea* L. (Fam. Amaranthaceae). The

plant is cut up or the infructescence is picked up in autumn when the fruit is ripe, dried in the sun, and the seed is gathered and removed from foreign matter.

Description Oblate, a few rounded-reniform, 1-1.5 mm in diameter. Externally black or reddish-black, lustrous, somewhat raised in center, with a hilum on the slightly dented lateral side. Testa thin and brittle. Odour, slight; tasteless.

Foreign matter Not more than 2 per cent (Appendix Ⅸ A).

Action To remove *heat* from the liver, and to clear the eyes of corneal opacity.

Indications Redness of the eyes and dizziness due to excessive *heat* or *fire* in the liver; nebula with blurred vision.

Usage and dosage 9-15 g.

Storage Preserve in a dry place.

Semen Citri Reticulatae
(橘核, Juhe)

Tangerine Seed

Tangerine Seed is the dried ripe seed of *Citrus reticulata* Blanco and its other cultivates (Fam. Rutaceae). The drug is collected after the fruit ripened, washed clean, and dried in the sun.

Description Slightly ovoid, 8-12 mm long, 4-6 mm in diameter. Externally pale yellowish-white or pale greyish-white, smoothy, with raphe line on one side, one end obtuse-rounded and the other end acuminate and small stalk-shaped. Testa thin, tenacious; endotesta thin, pale brown, cotyledons 2, yellowish-green, oily. Odour, slight; taste, bitter.

Identification Transverse section: Epidermal cells of testa consisting of rows of mucilage cells, with 1 row of palisade-arranged sclerenchymatous cells underneath, outer walls even or with a tail-like convex at the upper end, cell walls lignified, with cross-shaped or diagonal pits and uneven in thickness; cells of pigment layer containing orange-yellow or yellowish-brown contents and prisms of calcium oxalate, 7-16 μm in diameter. Endosperm cells 3-4 rows, some cell walls beaded, containing oil droplets. Cotyledon cells containing fine clusters or prisms of calcium oxalate, oil droplets and rosette crystals of hesperidin.

Processing *Semen Citri Reticulatae* Eliminate foreign matter, wash clean and dry. Break into pieces before use.

Semen Citri Reticulatae (*processed with salt*) Stir-bake the clean Semen Citri Reticulatae as described under the method for stir-baking with salt (Appendix Ⅱ D) to dryness and break into pieces before use.

Action To regulate the flow of *qi*, cause subsidence of nodulation, and relieve pain.

Indications Hernia; painful swelling of the testes; mastitis with formation of painful nodules.

Usage and dosage 3-9 g.

Storage Preserve in a dry place, protected from mould and moth.

Note The main cultivaries are *Citrus reticulate* 'Dahongpao' and *Citrus reticulate* '*tangerina*'.

Semen Coicis
(薏苡仁, Yiyiren)

Coix Seed

Coix Seed is the dried ripe kernel of *Coix lacryma-jobi* L. var. *mayuen* (Roman.) Stapf (Fam. Gramineae). The plant is collected in autumn when the fruit is ripe and dried in the sun. The fruit is picked up, dried in the sun, and the kernel is separated from the shell, yellowish-brown coat, and foreign matter.

Description Broad ovoid or elongated-elliptical, 4-8 mm long, 3-6 mm wide. Externally milky white, smooth, occasionally with yellowish-brown testa; One end obtusely rounded, the other end relatively broad and slightly dented with 1 pale brown dotted hilum; Dorsal surface rounded and protruding; ventral surface having 1 relatively broad and deep longitudinal furrow. Texture hard, fracture white and starchy. Odour, slight; taste, slightly sweet.

Identification (1) Powder: Pale whitish. Starch granules numerous, simple granule subrounded or polyhedral, 2-20 μm in diameter, hilum stellate; compound granules seldom visible, usually consisting of 2-3 components.

(2) To 1 g of the powder add 10 ml of petroleum ether (60-90℃), ultrasonicate for 30 minutes, cool and filter, evaporate the filtrate to dryness. Dissolve the residue in 1 ml of petroleum ether (60-90℃) as the test solution. Prepare a solution of 1 g of Semen Coicis reference drug in the same manner as the reference drug solution. Carry out the method for thin-layer chromatography (Appendix Ⅵ B), using silica gel G as the coating substance and a mixture of petroleum ether (60-90℃), ethyl acetate and acetic acid (10 : 3 : 0.1) as the mobile phase. Apply separately to the plate 10 μl of each of the above two solutions. After developing and removal of the plate, dry in air and examine under ultra-violet light at 365 nm. The spots in the chromatogram obtained with the test solution correspond in position and colour to the spots obtained with the reference drug solution and the reference solution.

(3) Dissolve a quantity of semen coicis oil extractives CRS and linolein CRS, accurately weighed, in the mobile phase obtained under the Assay to produce the reference solutions of 1 mg and 0.14 mg per ml, respectively. Carry out the method as described under the Assay, inject accurately 10 μl of the test solution and the reference solution obtained under the Assay, and each of the above solutions into the column. The retention time of the peaks obtained with the test solution and the reference solution is concordant with each other. The retention time of seven main peaks obtained with the test solution and the reference solution of semen coicis oil extractives is concordant with each other.

Foreigh matter Not more than 2.0 per cent (Appendix Ⅸ A).

Water Not more than 15.0 per cent (Appendix Ⅸ H, method 1).

Total ash Not more than 3.0 per cent (Appendix Ⅸ K).

Extractives Carry out the hot extraction method for determination of ethanol-soluble extractives (Appendix Ⅹ A), using anhydrous ethanol as the solvent, not less than 5.5 per cent.

Assay Carry out the method for high performance liquid chromatography (Appendix Ⅵ D).

Chromatographic system and system suitability Use octadecylsilane bonded silica gel as the stationary phase and a mixture of acetonitrile and dichloromethane (65 : 35) as the mobile phase. As detector an evaporative light scattering detector is used. The number of theoretical plates of the column is not less than 5000, calculated with reference to the peak of linolein CRS.

Reference solution Dissolve a quantity of linolein CRS accurately weighed, in the mobile phase to produce a solution of 0.14 mg per ml.

Test solution Weigh accurately 0.6 g of the powder (through No. 3 sieve), add 50 ml of the mobile phase, accurately measured, weigh accurately and macerate for 2 h, ultrasonicate (power, 300 W; frequency, 50 kHz) for 30 minutes, allow to cool and weigh again, make up the loss in weight with the mobile phase to the initial weight and mix well. Filter and use the successive filtrate as the test solution.

Procedure Inject accurately 5 μl and 10 μl of the reference solution, and 5-10 μl of the test solution into the column respectively, measure the peak area and calculate the content with external standard method.
It contains not less than 0.50 per cent of linolein ($C_{57}H_{104}O_6$), calculated with reference to the dried drug.

Processing *Semen Coicis* Eliminate foreign matter.

Semen Coicis (stir-baked) Stir-bake the clean Semen Coicis as described under the method for stir-baking with bran (Appendix Ⅱ D) until a pale yellow is produced.

Action To invigorate the spleen function and promote diuresis, alleviate arthritis, arrest diarrhea, remove *heat* and facilitate the drainage of pus.

Indications Edema, oliguria; arthritis with contracture of joints; diarrhea due to diminished function of the spleen; lung abscess, appendicitis; verruca plana.

Usage and dosage 9-30 g.

Storage Preserve in a ventilated and dry place, protected from moth.

Semen Crotonis Pulveratum (巴豆霜, Badoushuang)

Defatted Croton Seed Powder

Defatted Croton Seed Powder is a processed product of Croton Seed.

Processing Treat the clean Croton Seed as described under the method for frost-like powder (Appendix Ⅱ D), or pulverize the seed and carry out the Assay to determine its content of fatty oil, add sufficient starch to make the fatty oil content in compliance with the requirement and mix well.

Description A pale yellow, lax powder, homogeneous in size, oily in appearance.

Identification Complies with the tests for Identification described under Fructus Crotonis.

Assay Heat under reflux about 5 g of the powder, accurately weighed, in a Soxhlet's extractor with 100 ml of ether for 6-8 hours to exhaust fatty oil. Transfer the extract to the evaporating dish dried previously to constant weight, remove the ether at a low temperature on a water bath. Dry the residue at 100℃ for 1 hour, cool, and weigh accurately.
It contains not less than 18.0 per cent and not more than 20.0 per cent of fatty oil.

Action To cause drastic purgation, relieve edema, and soothe the throat.

Indications Constipation and indigestion due to accumulation of cold; ascites and edema with oliguria and constipation; inflammation of the throat.

Usage and dosage 0.1-0.3 g; usually used for making pills or powder.

Precaution Contraindicated in pregnancy. Incompatible with Semen Pharbitidis.

Storage Preserve in a cool and dry place.

Semen Cuscutae (菟丝子, Tusizi)

Dodder Seed

Dodder Seed is the dried ripe seed of *Cuscuta chinensis* Lam. (Fam. Convolvulaceae). The plant is collected in autumn when the fruit is ripe, dried in the sun, the seed is collected and removed from foreign matter.

Description Subspherical, 1-1.5 mm in diameter. Externally greyish-brown or yellowish-brown, with numerous fine projecting dots, a slightly sunken linear raphe at one end. Texture hard, difficult to break with finger. Odour, slight; taste, weak.

Identification (1) Macerate a small quantity in boiling water, a mucilage is produced on the surface; boil until the testa is broken, yellowish-white silky rotary embryo is revealed.
(2) Powder: Yellowish brown or dark brown. The epidermal cell of testa subsquare or subrectangular in section, with lateral walls thickened; rounded polygonal, with walls at the corner markedly thickened in the surface view. Palisade cells of testa arranged in pieces, two raws of cells visible in section, with lustrous strip; polygonal shrunken in the surface view. Perisperm cell polygonal or subrounded, containing aleurone grains in the lumen. Cotyledon cell filled with aleurone grains and fatty oil droplets.

Total ash Not more than 10.0% (Appendix Ⅵ K).

Processing *Semen Cuscutae* Eliminate foreign matter, wash clean, dry in the sun.

Semen Cuscutae (stir-baked with salt-water) Stir-bake the clean Semen Cuscutae as described under the method for stir-baking with salt-water (Appendix Ⅱ D) until the seeds become slightly convex.
Externally brownish-yellow, broken and slightly aromatic. A mucilage is produced on the surface after macerating the processed Semen Cuscutae in an appropriate quantity of boiling water. A yellow to dark brown curved and rotary embryo is revealed after boiling.

Action To arrest seminal discharge and abnormal urination, prevent abortion, improve eyesight and relieve diarrhea by replenishing and tonifying the liver and the kidney.

Indications Impotence, seminal emission, dripping of urine after urination, enuresis, frequent urination, aching and weakness of the loins and knees, blurred vision and tinnitus; threatened abortion due to deficiency of the kidney; diarrhea due to hypofunction of the spleen and the kidney; external use for vitiligo.

Usage and dosage 6-12 g; appropriate quantity for external use.

Storage Preserve in a ventilated and dry place.

Semen Euphorbiae (千金子, Qianjinzi)

Caper Euphorbia Seed

Caper Euphorbia Seed is the dried ripe seed of *Euphorbia lathyris* L. (Fam. Euphorbiaceae). The drug is collected in summer and autumn when the fruit is ripe, removed from foreign matter, and dried.

Description Ellipsoidal or ovoid, about 5 mm long, 4 mm in diameter. Externally greyish-brown, with irregular reticulated wrinkles, greyish-black in the dents of reticulated pits, forming fine spots. A longitudinally furrowed raphe occurring on one side, a protrudent chalaza at the apex, a linear raphe at the lower end, and an almost white raised caruncle or its scar at the base. Testa thin and fragile, kernel white or yellowish-white, oily. Odour slight, taste, pungent.

Identification (1) Transverse section: Epidermal cells of testa undulated, outer wall relatively thickened containing brown contents; hypodermis consisting of 1-3 layers of parenchymatous cells; the inner epidermis consisting of 1 layer of subsquare palisade cells, the inner part of lateral walls and inner walls thickened distinctly. Palisade cells of endotesta 1 row, brown, slender cylindrical, with thickened and lignified walls, sometimes pits visible. Perisperm consisting of several layers of subsquare parenchymatous cells; cells of endosperm subrounded, cells of cotyledons square or rectangular. All containing aleurone grains.

(2) To 2 g of the powder in a Soxhlet's extractor add 80 ml of petroleum ether (30-60℃), heat under reflux for 30 minutes, filter and discard the petroleum ether solution. To the residue add 80 ml of ethanol, heat under reflux for 1 hour, cool, and filter, evaporate the filtrate to dryness. Dissolve the residue in 10 ml of ethanol and use it as the test solution. Dissolve esculetin CRS in ethanol to produce a solution containing 1 mg per ml as the reference solution. Carry out the method for thin layer chromatography (Appendix Ⅵ B), using silica gel G containing sodium carboxymethyl cellulose as the coating substance and a mixture of toluene-ethyl acetate-formic acid (5 : 4 : 1) as the mobile phase. Apply separately 5 μl of the test solution and 1 μl of the reference solution to the plate. After developing and removal of the plate, dry in air, examine under ultraviolet light at 365 nm. The bright bluish fluorescent spot in the chromatogram obtained with the test solution corresponds in position and colour to the spot in the chromatogram obtained with the reference solution.

Processing *Semen Euphorbiae* Eliminate foreign matter, sift and wash clean, dry in the sun. Break into pieces before use.

Action To cause drastic purgation for treating edema, and eliminate blood stasis for treating masses.

Indications Edema or retained fluid with abdominal distension, oliguria and constipation; amenorrhea due to blood stasis; external use for ringworm and verrucous vegetations.

Usage and dosage 1-2 g without shell and oil, used in pills or powder; for external use, appropriate quantity is pounded into paste and applied topically.

Precaution Contraindicated in pregnancy or debility with loose bowels.

Storage Preserve in a cool and dry place, protected from moth.

Semen Euphorbiae Pulveratum (千金子霜, Qianjinzi Shuang)

Caper Euphorbia Seed Powder

Caper Euphorbia Seed Powder is the processed product of Semen Euphorbiae.

Processing Rub off the testa of clean Semen Euphorbiae, carry out the method for frost-like powder making (Appendix Ⅱ D) to make the frost-like powder.

Description Homogeneous and loose, light yellow powder, slightly oleaginous. Taste, pungent.

Identification Complies with Identification test (2) described under Semen Euphorbiae.

Assay Transfer 5 g, accurately weighed, to a Soxhlet's extractor, add 100 ml of ethanol, and heat under reflux for 6-8 hours to exhaust fatty oil. Collect the extracts to a evaporating dish dried previously to constant weight, and evaporate to dryness at a low temperature on a water bath. Dry at 100℃ for 1 hour, allow to cool and weigh accurately. It contains not less than 18.0 per cent and not more than 20.0 per cent of fatty oils.

Action and indications As described under Semen Euphorbiae.

Usage and dosage 0.5-1 g, usually used in pills or powder. For external use, appropriate quantity is applied topically.

Precaution and storage As described under Semen Euphorbiae.

Semen Euryales (芡实, Qianshi)

Gordon Euryale Seed

Gordon Euryale Seed is the dried kernel of ripe seed of *Euryale ferox* Salisb. (Fam. Nymphaeaceae). The ripe fruit is collected in late autumn and early winter, peeled, and the seed is taken out, washed clean, removed from hard shell (testa), and dried.

Description Subspherical, mostly broken, the whole one, 5-8 mm in diameter; surface showing brownish-red tegmen, one end yellowish-white, about 1/3 in size of the whole kernel, with a depressed dotted scar of hilum, white on removal of tegmen. Texture relatively hard, fracture white, starchy. Odour, slight; taste, weak.

Identification Powder: White, mainly consisting of starch granules. Simple granules subrounded, 1-4 μm in diameter, hilum of large granules indistinctly visible; compound granules mostly consisting of more than one hundred components, subspherical, 13-35 μm in diameter, a few consisting of 2-3 components.

Processing *Semen Euryales* Eliminate foreign matter.

Semen Euryales (stir-baked with bran) Stir-bake the clean Semen Euryales as described under the mehtod for stir-baking with bran (Appendix Ⅱ D) to pale yellow.

Action To benefit the kidney and arrest seminal discharge,

to invigorate the function of the spleen and relieve diarrhea, and to remove *damp* and check excessive leukorrhea.

Indications Nocturnal emission, spermatorrhea, enuresis, frequent urination; chronic diarrhea due to hypofunction of the *spleen*; turbid discharge mixed with urine, excessive leukorrhea.

Usage and dosage 9-15 g.

Storage Preserve in a ventilated and dry place, protected from moth.

Semen Ginkgo (白果, Baiguo)

Ginkgo Seed

Ginkgo Seed is the dried ripe seed of *Ginkgo biloba* L. (Fam. Ginkgoaceae). The drug is collected in autumn when the seed is ripe, removed from the fleshy testa, washed clean, steamed or boiled briefly, and dried by baking gently.

Description Somewhat ellipsoidal, one end relatively acute and the other end obtuse, 1.5-2.5 cm long, 1-2 cm wide, about 1 cm thick. Externally yellowish-white or pale brownish-yellow, smooth, with 2-3 ribs. Mesotesta (shell) bony and hard. Endotesta membranous. Kernel broadly ovoid or ellipsoidal, one end pale brown and the other end golden-yellow; transverse section yellow, gelatinized in the outer part, and pale yellow or pale green in the inner part, starchy, with a fissure in the centre. Odour; slight; taste, sweet, slightly bitter.

Identification To 10 g of the powder add 40 ml of methanol, heat and reflux for 1 hour, filter, evaporate the filtrate to dryness, add 15 ml of water to dissolve the residue, filter with a few cotton, the filtrates pass through a pre-prepared polyamide small column (80-100 mesh, 3 g, 10-15 mm in inner diameter), elude with 70 ml of water, shake and extract the eludes with ethyl acetate for 2 times, each of 40 ml, combine the ethyl acetate solutions, evaporate to dryness, dissolve the residue with 1 ml of methanol and use as the test solution. Prepare a solution of bilobalide A CRS, bilobalide C CRS containing 0.5 mg respectively per ml as the reference solution. Carry out the method for thin layer chromatography (Appendix Ⅵ B), using silica gel G previously prepared with 4% solution of sodium acetate, containing sodium carboxymethylcellulose, as the coating substance and a mixture of toluene, ethyl acetate, acetone and methanol (10 : 5 : 5 : 0.6) as the mobile phase. Apply separately to the plate 10 μl of each of the two solutions. After developing and removal of the plate, dry in air, spray with acetic anhydride, heat at 110℃ for 30 minutes to the spots distinct, examine under ultraviolet light at 365 nm. The fluorescent spots in the chromatogram obtained with the test solution correspond in position and colour to the spots in the chromatogram obtained with the reference solution.

Processing *Nux Ginkgo* Remove foreign matter and shell from Semen Ginkgo. Break into pieces before use.

Nux Ginkgo (*stir-baked*) Stir-bake the clean Nux Ginkgo as described under the method for simple stir-baking (Appendix Ⅱ D) to scented. Break into pieces before use.

Action To arrest persistent cough and asthma, and reduce leukorrhea and urination.

Indications Persistent cough and asthma with profuse expectoration; morbid leukorrhea with whitish discharge; enuresis, frequent urination.

Usage and dosage 4.5-9 g.

Precaution Raw Semen Ginkgo is toxic.

Storage Preserve in a ventilated and dry place.

Semen Hyoscyami (天仙子, Tianxianzi)

Henbane Seed

Henbane Seed is the dried ripe seed of *Hyoscyamus niger* L. (Fam. Solanaceae). The fruit is collected in summer and autumn when the pericarp turns yellow, exposed to the sun, and the seeds are tapped out, removed from pericarp and branch, dried in the sun.

Description Flattened subreniform or flattened ovoid, about 1 mm in diameter. Externally brownish-yellow or greyish-yellow, with fine reticulated striations, and a pointed hilum at the somewhat acute end. Section greyish-white, oily, having endosperm, embryo curved. Odour, slight; taste, slightly pungent.

Identification (1) To 0.5 g of the powder add 0.5 ml of concentrated ammonia TS, mix well, add 5 ml of chlorofrom, stopper tightly, shake constantly for 0.5 hour, filter. Evaporate the filtrate to dryness, dissolve the residue in 0.5 ml of chloroform. Evaporate 5 drops of the solution on a water bath to dryness, add 4 drops of fuming nitric acid, evaporate to dryness. To the residue add 1 ml of dehydrated ethanol and a small piece of potassium hydroxide, a purple colour is produced.
(2) To 1 g of the powder add 10 ml of petroleum ether (30-60℃), ultrasonicate for 15 minutes, discard the petroleum ether solution, treat the residue in the same manner once again. Evaporate the residue to dryness, moisten with 2 ml of a mixed solution of equal amount of concentrated ammonia TS and ethanol, add 20 ml chloroform, ultra sonicate for 15 minutes, filter. Evaporate the filtrate to dryness, dissolve the residue in 0.5 ml of dehydrated ethanol as the test solution. Dissolve atropine sulfate CRS and scopolamine hydrobromide CRS in dehydrated ethanol to produce a solution containing 1 mg of each per ml as the reference solution. Carry out the method for thin layer chromatography (Appendix Ⅵ B), using silica gel G as the coating substance and a mixture of ethyl acetate methanol and concentrated ammonia TS (17 : 2 : 1) as the mobile phase. Apply separately to the plate 5 μl of each of two solutions. After developing and removal of the plate, dry in air, spray with potassium iodobismuthate TS and ethanolic sodium nitrite TS successively. The two brown spots in the chromatogram obtained with the test solution correspond in position and colour to the two spots in the chromatogram obtained with the reference solution.

Total ash Not more than 8.0 per cent (Appendix Ⅸ K).

Acid-insoluble ash Not more than 3.0 per cent (Appendix Ⅸ K).

Action To relieve spasm and pain, cause tranquilization and alleviate asthma.

Indications Gastric spasm and pain; asthma and cough; mania.

Usage and dosage 0.06-0.6 g.

Precaution Contraindicated in heart diseases, tachycardia,

glaucoma and pregnancy.

Storage Preserve in a ventilated and dry place.

Semen Impatientis (急性子, Jixingzi)

Garden Balsam Seed

Garden Balsam Seed is the dried ripe seed of *Impatiens balsamina* L. (Fam. Balsaminaceae). The drug is collected in summer and autumn when the fruit is nearly ripe, dried in the sun, removed from pericarp and foreign matter.

Description Elliptic, oblate, or ovoid, 2-3 mm long, 1.5-2.5 mm wide. Externally brown or greyish-brown, rough, with sparse white or pale yellowish-brown spots. Raphe occurring at the narrow end, slightly prominent. Texture hard, testa thin, cotyledons greyish-white, translucent, oily. Odour, slight; taste, weak, slightly bitter.

Action To eliminate blood stasis, soften hard masses, and remove undigestion food.

Indications Masses; amenorrhea; dysphagia.

Usage and dosage 3-4.5 g.

Precaution Used with caution in pregnancy.

Storage Preserve in a dry place.

Semen Juglandis (核桃仁, Hetaoren)

English Walnut Seed

English Walnut Seed is the dried ripe seed of *Juglans regia* L. (Fam. Juglandaceae). The drug is collected in autumn when the fruit is ripe, removed from the fleshy pericarp, dried in the sun, then removed from the nut-shell and lignified septate.

Description Mostly broken to irregular pieces, with shrunken and curved furrows, varying in size. The whole seeds subspheroidal, 2-3 cm in diameter. Testa pale yellow or yellowish-brown, membranous, veins of vascular bundles dark brown. Cotyledons almost white. Texture fragile, oily. Odour, slight; taste, sweet, testa taste, astringent and slightly bitter.

Water Carry out the method for the determination of water (Appendix Ⅸ H, method 1), not more than 7.0%.

Action To tonify the kidney, warm the lung, and relax the bowels.

Indications Aching and weakness of the loins and knees; impotence, seminal emission, asthma and cough of deficiency-cold type, constipation.

Usage and dosage 6-9 g.

Storage Preserve in a cool and dry place, protected from moth.

Semen Lablab Album (白扁豆, Baibiandou)

White Hyacinth Bean

White Hyacinth Bean is the dried ripe seed of *Dolichos lablab* L. (Fam. Leguminosae). The fruit is collected in autumn and winter when ripe, dried in the sun, and the seed is gathered, and dried again in the sun.

Description Flattened-ellipsoidal or flattened-ovoid, 8-13 mm long, 6-9 mm wide, about 7 mm thick. Externally pale yellowish-white or pale yellow, smooth, somewhat lustrous, with a white, prominent, eyebrow-shaped caruncle at the edge of one side. Texture hard. Testa thin and brittle, cotyledones 2, plump, yellowish-white. Odour, slight; taste, weak, bean-like on chewing.

Identification Transverse section: Epidermis of 1 layer of palisade cells, 2 layers at hilum, light bend distinct. Supporting cells of 1 layer, dumbell-shaped, 3-5 layers at hilum. Parenchyma of 10 layers of cells, located under supporting cells, the inner ones obiterate. Cells of cotyledons containing numerous starch granules. The outer part of palisade cells at hilum with caruncle, the inner part with tracheid islet, elliptical walls reticularly thickened, with stellate tissue at two sides, cells stellate, with large intercellular space, some lumen containing brown contents.

Processing *Semen Lablab Album* Eliminate foreign matter. Break to pieces before use.

Semen Lablab Album (*stir-baked*) Stir-bake the clean Semen Lablab Album as described under the method for simple stir-baking (Appendix Ⅱ D) until it becomes yellowish, with charred spots. Break to pieces before use.

Action To invigorate the spleen and remove *damp*, particularly the *summer-damp*.

Semen Lablab Album (*stir-baked*) To invigorate the spleen and remove *damp*.

Indications Weakness of the spleen and stomach with loss of appetite and loose bowels; excessive leukorrhea; vomiting, diarrhea, distress in the chest and distension in the abdomen caused by *summer-damp*.

Semen Lablab Album (*stir-baked*) Diarrhea and excessive leukorrhea in deficiency syndrome of the spleen.

Usage and dosage 9-15 g.

Storage Preserve in a dry place, protected from moth.

Semen Lepidii Semen Descurainiae (葶苈子, Tinglizi)

Pepperweed Seed

Tansymustard Seed

Pepperweed Seed or Tansymustard Seed is the dried ripe seed of *Lepidium apetalum* Willd. or *Descurainia sophia* (L.) Webb ex Prantl. (Fam. Cruciferae). The former is commonly known as "Bei Tinglizi", and the latter is known as "Nan

Tinglizi". The plant is collected in summer when the fruit is ripe, dried in the sun, and the seed is gathered, removed from foreign matter.

Description *Seed of Lepidium apetalum* Flattened-ovoid, 1-1.5 mm long, 0.5-1 mm wide. Externally brown or reddish-brown, somewhat lustrous, with 2 longitudinal furrows, one of them relatively distinct. One end obtuse, the other acute and slightly concave, almost white, hilum situated at the concave end. Odour, slight; taste, slightly pungent, relatively viscous.

Seed of Descurainia sophia Oblong, somewhat flattened, about 1 mm long, 0.5 mm wide. One end obtuse, the other end slightly concave or relatively truncate. Taste, slightly pungent and bitter, somewhat viscous.

Identification (1) Macerate a small quantity of the drug in water, observe under a magnifier, the transparent mucilage layer of *Seed of Lepidium apetalum* is relatively thick occurred in more than 1/2 of the width of seed. The transparent mucilage layer of *Seed of Descurainia sophia* is thin and occurs in less than about 1/5 of the width of seed.
(2) *Seed of Lepidium apetalum* Powder: yellowish-brown. Epidermal cells of testa consisting of mucilage cells, rectangular in section view, thickened inner-walls, extending outwards to cellulose column, 24-34 μm long, obtuse-rounded, oblique or truncate at apex, mucilage striations visible in periphery. Inner epidermal cells of testa yellow, polygonal, subsquare, some times longpolygonal in surface view, 15-42 μm in diameter, walls 5-8 μm thick.

Seed of Descurainia sophia Outer epidermal cells of testa subsquare in section view, cellulose column short, 8-18 μm long, inner epidermal cells of testa rectangular polygonal in surface view.

Swelling capacity Weigh about 0.6 g of the drug, carry out the method for the determination of swelling capacity (Appendix Ⅸ O), not less than 12 for Semen Lepidii, and not less than 3 for Semen Descurainiae.

Processing *Semen Lepidii or Semen Descurainiae* Eliminate foreign matter.

Semen Lepidii or Semen Descurainiae (*stir-baked*) Stir-bake the clean Semen Lepidii or Semen Descurainiae as described under the method for simple stir-baking (Appendix Ⅱ D) until it cracks.

Action To quench *fire* in the lung, relieve dyspnea, and cause urination.

Indications Dyspnea, cough with profuse expectoration and fullness sensation in the chest, accompanied with hydrothorax, ascites and oliguria; edema in pulmonary heart disease.

Usage and dosage 3-9 g, decocted with wrapping.

Storage Preserve in a dry place.

Semen Lini
(亚麻子, Yamazi)

Linseed

Linseed is the dried ripe seed of *Linum usitatissimum* L. (Fam. Linaceae). The plant is collected in autumn when the fruit is ripe, dried in the sun. The seed is tapped off, removed from foreign matter, and dried again in the sun.

Description Flattened-ovate, obtuse at one end, acute and slightly oblique at the other end, 4-6 mm long. 2-3 mm wide. Externally reddish-brown or greyish-brown, smooth, lustrous. Hilum occurring at the sunken part of the acute end; raphe pale brown, occurring at the edge of one side. Testa thin, endosperm brown, membranous; cotyledons 2, yellowish-white, oily. Odour, slight; taste, bean-like on chewing.

Identification (1) Soak a few of the drug with warm water, the epidermal mucilage layer swells to a transparent mucilage membrane surrounding the seed.
(2) Transverse section: Epidermal cells relatively large, subrectangular, walls containing mucilage, swelling and showing striations when contacted with water, externally covered with cuticle. Hypodermis consisting of 1-5 layers of parenchymatous cells, with slightly thickened walls. Fibre layer consisting of 1 layer of fiber cells, arranging closely, slightly prolonged radially, 3-5 μm in diameter, walls thickened and lignified, lumen relatively narrow, striations indistinctly visible. Cells of decadent layer indistinct. Pigment layer consisting of 1 layer of flattened parenchymatous cells, containing brownish-red contents. Cells of endospermum and cotyledons polygonal, containing fatty oil and aleurone grains. Aleurone grain 7-14 μm in diameter, containing 1-2 crystalloids and globoids.
(3) To 0.5 g of the powder add a small amount of water in a test tube, hanging a stripe of trinitrophenol TP, impregnated with 10% solution of sodium carbonate (the stripe should not touch the powder and the tube wall), stopper tightly, heat on a hot water bath for 3-5 minutes, the test paper turns to a brick-red colour.

Processing Eliminate foreign matter, break to pieces or grind after stir-frying.

Action To cause lubrication and dispel *wind*.

Indications Constipation, dryness and itching of the skin, withering and loss of hair.

Usage and dosage 9-15 g.

Precaution Contraindicated in patients with loose bowels.

Storage Preserve in a cool and dry place, protected from moth.

Semen Litchi
(荔枝核, Lizhihe)

Lychee Seed

Lychee Seed is the dried ripe seed of *Litchi chinensis* Sonn. (Fam. Sapindaceae). The fruit is collected in summer when ripe, and the seed is removed from pericarp and fleshy aril, washed clean, and dried in the sun.

Description Prolate-rounded or ovoid, slightly flattened, 1.5-2.2 cm long, 1-1.5 cm in diameter. Externally brownish-red or purplish-brown, smooth, lustrous, with slightly dents and fine wrinkles, bearing a subrounded, yellowish-brown raphe at one end, about 7 mm in diameter. Texture hard, cotyledons 2, brownish-yellow. Odour, slight; taste, slightly sweet, bitter and astringent.

Identification Powder: brownish-yellow. Parquetry layer cells yellowish-brown, stripe-shaped, with several cells forming a group, in irregular parquet. Stellate cells brownish, presenting irregular stellate branches, truncate or relatively obtuse rounded at the apex of branch, intercellular space wide, walls thin. Stone cells occuring in

groups or scattering in singles, subrounded, subsquare, subpolyangular, rectangle or oval, most protruding or branched. Cotyledon cells subrounded or subpolyangular, filled with starch granules, brown oil cells visible.

Processing *Semen Litchi* Eliminate foreign matter, wash clean and dry. Break to pieces before use.

Semen Litchi (*processed with salt*) Stir-bake the clean Semen Litchi as described under the method for processing with salt water (Appendix Ⅱ D) to dry.

Action To promote the flow of *qi* and the subsidence of induration, and dispel *cold* and relieve pain.

Indications Hernial pain of cold type, swelling and pain of the testes.

Usage and dosage 4.5-9 g.

Storage Preserve in a dry place, protected from moth.

Semen Momordicae (木鳖子, Mubiezi)

Cochinchina Momordica Seed

Cochinchina Momordica Seed is the dried ripe seed of *Momordica cochinchinensis* (Lour.) Spreng. (Fam. Cucurbitaceae). The ripe fruit is collected in winter, cut and half-dried in the sun. The seed is removed from the pulp and dried.

Description Flattened-orbicular plate-like, slightly raised or dented in the centre, 2-4 cm in diameter, about 5 mm thick. Externally greyish-brown to blackish-brown, with reticulated patterns and a yellowish hilum at the relatively larger dentate protruding in the margin. Testa hard and brittle, endotesta greyish-green, tomentose-like. Cotyledons 2, yellowish-white, oily. Odour, characteristically greasy; taste, bitter.

Identification (1) Powder: Yellowish-grey. Sclerenchymatous cells elliptical or subrounded, sinuous-margined, 51-117 μm in diameter. with thickened and lignified walls, and lumina distinct and some narrowed. Parenchymatous cells of cotyledons polygonal, containing fixed oil masses and aleurone grains; fixed oil masses subrounded, 27-73 μm in diameter, reticulated striations visible on the surface.
(2) To 2 g of the coarse powder add 20 ml of ether, macerate warmly for 30 minutes and filter. Place 2 ml of the ether extract into a glass dish, evaporate to dryness. To the residue add a small quantity of anhydrous sodium sulfate, heat, bubbles and thick white irritating gas are produced.
(3) To 2 g of the coarse powder add 20 ml of water, heat on a water bath for 30 minutes and filter. Place 2 ml of the filtrate into a stoppered test tube, shake vigorously for 1 minute, a large amount of foam is produced, which persists for 10 minutes.

Processing *Semen Momordicae* Remove the shell and break the kernel to pieces.

Semen Momordicae (*frost-like powder*) Stir-bake clean kernels, triturate, wrap in paper and press to remove the oil.

White or greyish-white lax powder.

Action To promote the subsidence of nodulation and swelling, counteract poisons and cure sores.

Indications Sores and inflammatory swelling, mastitis, scrofula, hemorrhoids, anal fistula, chronic eczema, neurodermatitis, scald.

Usage and dosage 0.9-1.2 g for oral administration; appropriate quantity is ground into powder and mixed with oil or vinegar for topical application.

Precaution Used with caution in pregnancy.

Storage Preserve in a dry place.

Semen Myristicae (肉豆蔻, Roudoukou)

Nutmeg

Nutmeg is the dried kernel of *Myristica fragrans* Houtt (Fam. Myristicaceae).

Description Ovoid or ellipsoidal, 2-3 cm long, 1.5-2.5 cm in diameter. Externally greyish-brown or greyish-yellow, sometimes covered with white powder (lime powder). Pale longitudinal furrows and irregular reticulated wrinkles occurred all over the seed. A hilum occurring at the broad end, showing a pale coloured, rounded convex. Chalaza dark and dented. Raphe longitudinally furrowed, connecting with two ends. Texture hard, fracture showing marble-like striations, brownish-yellow, interweaved. A dried and shrunken embryo visible at the broad end, oily. Odour, strongly aromatic; taste, pungent.

Identification (1) Transverse section: Outer layers of perisperm consisting of more than 10 rows of flattened and wrinkled cells, containing brown contents, small prisms visible occasionally, crisscross tissure with small vascular bundles, dark brown perisperm inserting to the pale yellow endosperm, forming marble-like striations, with numerous oil cells. Cells of endosperm thin-walled, subrounded, filled with starch granules, fatty oil droplets and aleurone grains, scattered with pale yellow cells. Starch granules mostly simple, 10-20 μm in diameter, occasionally compound, composed of 2-6 components, 25-30 μm in diameter, hilum distinct. After treating with iodine solution and mounting in glycerin, examine immediately under a microscopy, the relatively large aleurone grains visible among numerous bluish-black starch granules. If mount in chloral hydrate, the fatty oil often showing piece-shaped or scale-shaped, and turning to oil droplets while heating.
(2) To the volatile oil, obtained from the Assay, add chloroform to prepare a solution containing 0.2 ml of volatile oil per ml as the test solution. Prepare a solution of 20 g of Semen Myristicae reference drug in the same manner as the reference drug solution. Carry out the method for thin layer chromatography (Appendix Ⅵ B), using silica gel G as the coating substance and a mixture of petroleum ether (60-90℃) and benzene (1 : 1) as the mobile phase. Apply separately 10 μl of each of the two solutions to the plate. After developing and removal of the plate, dry in air, spray with anisaldehyde TS, heat at 105℃ to the spots clear. The spots in the chromatogram obtained with the test solution correspond in position and colour to the spots in the chromatogram obtained with the reference solution.

Water Carry out the method for determination of water (Appendix Ⅸ H, method 2), not more than 10.0 per cent.

Assay Weigh accurately 20 g of the coarse powder, carry out the method for determination of volatile oil (Appendix Ⅹ D).
It contains not less than 6.0 per cent (ml/g) of volatile oil.

Processing *Semen Myristicae* Eliminate foreign matter, wash clean, and dry.

Semen Myristicae (*stir-baked with gentle heat*) To each

clean Semen Myristicae, wrap in a mixture of wheat flour and a quantity of water, or carry out the method of making water pills, moisten the surface of Semen Myristicae with water, wrap in 3-4 layers of wheat flour. Stir-bake the wrapped drug with heated talc powder or sand until the wheat flour cover showing charred yellow, sift, strip off the cover and cool, using 50 kg of talc powder per 100 kg of Semen Myristicae.

Action To warm the spleen and stomach and promote the flow of *qi*, and arrest diarrhea as an astringent.

Indications *Deficiency-cold* of the spleen and stomach with persistent diarrhea, epigastric and abdominal distension and pain, anorexia, and vomiting.

Usage and dosage 3-9 g.

Storage Preserve in a cool and dry place, protected from moth.

Semen Nelumbinis (莲子, Lianzi)

Lotus Seed

Lotus Seed is the dried ripe seed of *Nelumbo nucifera* Gaertn. (Fam. Nymphacaceae). The drug is collected in autumn when ripe, removed from the pericarp, and dried.

Description Somewhat ellipsoidal or subspheroidal, 1.2-1.8 cm long, 0.8-1.4 cm in diameter. Externally pale yellowish-brown to reddish-brown, with fine longitudinal striations and relatively wide veins. The centre of one end papillate, dark brown, mostly with cracks, somewhat dented around the edge. Texture hard, testa thin, uneasily peeled off. Cotyledons 2, yellowish-white, plump, with green lotus plumale at the space between two cotyledons. Odour, slight; taste, sweet, slightly astringent.

Identification (1) Powder: almost white. Mainly starch granules. Simple granule long rounded, sub-rounded, subtriangular, some with small protruding, 4-25 μm in diameter, a few hilum visible, cleft or dotted; compound granule rare, consisting of 2-3 components. Cells of pigmented layer yellowish-brown or reddish-brown, on surface view subrectangular, sublongpolygonal or sub-rounded, sometimes calcium oxalate clusters visible. Cotyledon cells oval, walls slightly thickened, some beaded, pitted areas faint. Annular and spiral vessels visible.
(2) Shake thoroughly a small quantity of the powder and a quantity of water, add several drops of iodide TS; a bluish-purple colour is produced. The colour abate gradually after heating, allow to cool, the bluish-purple produced again.
(3) Macerate 0.5 g of the powder in 5 ml of water, filter to a test tube, add several drops of α-naphthol TS, mix well, add dropwise 1 ml of sulfuric acid along the tube wall; a purple colour ring is produced at the junction of the two layers.
(4) To 5 g of the coarse powder add 30 ml of chloroform, shake, allow to stand over night, filter, evaporate the filtrate to dryness. Dissolve the residue in 2 ml of ethyl acetate as the test solution. Prepare a solution of 5 g of Semen Nelumbinis reference drug in the same manner as the reference drug solution. Carry out the method for thin layer chromatography (Appendix Ⅵ B), using silica gel G as the coating substance and a mixture of *n*-hexane and acetone (7 : 2) as the mobile phase. Apply separately 2 μl each of the two solutions to the plate. After developing and removal of the plate, dry in air. Spray with 5% vanillin in 10% sulfuric acid ethanol solution and heat at 105℃ to the spot distinct. The spots in the chromatogram obtained with the test solution correspond in position and colour to the spots in the chromatogram obtained with the reference drug solution.

Water Carry out the method for the determination of water (Appendix Ⅸ H, method 1), not more than 14.0 per cent.

Processing Soak with water for a moment, soften thoroughly, cut, remove the lotus *plumule*, and dry.

Action To tonify the spleen, relieve diarrhea, replenish the kidney, arrest seminal emission, nourish the heart, and induce tranquillization.

Indications Protracted diarrhea due to hypofunction of the spleen, seminal emission, leukorrhagia; palpitation, insomnia.

Usage and dosage 6-15 g.

Storage preserve in a dry place, protected from moth.

Semen Nigellae (黑种草子, Heizhongcaozi)

Fennelflower Seed

Fennelflower Seed is the dried seed of *Nigella glandulifera* Freyn (Fam. Ranunculaceae), used commonly by the Uygur nationality. The drug is collected in autumn, removed from soil and pericarp, and dried in the sun.

Description Triangular-ovoid, 2.5-3 mm long, about 1.5 mm wide. Externally black and rough, apex somewhat narrow and sharp; base relatively obtuse, with irregular protrudings. Texture hard; fracture greyish-white, oily. Odour, slightly aromatic; taste, pungent.

Identification Transverse section: Epidermis cells of testa 1 row, varying in size, subrectangular or irregularly oblong, frequently elongated tangentially, outer walls mostly with papilla-like or nonglandular hair-like excrescences, walls slightly thickened, dark brown; cuticle somewhat thin, finely and densely granulate striations indistinctly visible. Parenchyma of testa consisting of 3-4 rows of cells, rectangular or irregular, somewhat elongated tangentially; inner epidermis cells 1 row, flattened, brown. Perisperm consisting of 1 row of rectangular cells, elongated radially, sometimes dilapidated; endosperm cells polygonal, filled with oil droplets and aleurone grains. Cotyledon cells polygonal or subrounded, the outer row of cells slightly elongated radially, filled with aleurone grains and fatty oil droplets.
Powder: Greyish-black. Epidermal cells of testa dark brown, polygonal on surface view, varying in size. the outer walls gibbose or mammillate, the inner epidermis of testa, brown, rectangular, or subpolygonal on surface view, anticlinal walls beaded, periclinal walls finely and densely reticulate-striated. Endosperm cells polygonal, containing oil droplets and aleurone grains.

Foreign matter Not more than 5.0 per cent (Appendix Ⅸ A).

Water Carry out the method for determination of water (Appendix Ⅸ H, method 2), not more than 10.0 per cent.

Total ash Not more than 8.0 per cent (Appendix Ⅸ K).

Acid-insoluble ash Not more than 2.0 per cent (Appendix Ⅸ K).

Extractives Carry out the hot extraction method for determination of ethanol-soluble extractives (Appendix Ⅹ A), not less than 25.0 per cent.

Action To replenish the kidney and benefit the brain, stimulate menstruation, promote lactation, and induce urination.

Indications Tinnitus and forgetfulness; amenorrhea; oligogalaetia; urinary infection, urolithiasis.

Usage and dosage 2-6 g.

Precaution Contraindicated in pregnancy and the patients with febrile diseases.

Storage Preserve in a cool and dry place.

Semen Oroxyli
(木蝴蝶, Muhudie)

Indian Trumpetflower Seed

Indian Trumpetflower Seed is the dried ripe seed of *Oroxylum indicum* (L.) Vent. (Fam. Bignoniaceae). The fruit is collected in autumn and winter, exposed to strong sun light until the fruit dehiscent, the seed is gathered, and dried in the sun.

Description Butterfly-shaped thin slices, testa extended to wide and thin wing at three sides except the base, 5-8 cm long, 3.5-4.5 cm wide. Externally pale yellowish-white, the wing translucent, silky lustrous, with radial striations, most of the edge broken. Texture light, when removed from testa showing cotyledons surrounded by a membranous endosperm. Cotyledons 2, butterfly-shaped, yellowish-green or yellow, 1-1.5 cm in long diameter. Odour, slight; taste, slightly bitter.

Identification (1) Powder: yellow or yellowish-green. Cells of seed wing long fibre-shaped, with sinuously thickened walls, 20-40 μm in diameter. Cells of endosperm polygonal, with beaded walls.

(2) To 2 g of the powder add 30 ml of ethanol, heat under reflux for 15 minutes, filter. Dissolve 0.5 g boric acid in the filtrate, filter, use filtrate as the test solution. Dissolve baicalin CRS in the ethanol to produce a solution containing 1 mg per ml as the reference solution. Carry out the method for thin layer chromatography (Appendix VI B), using silica gel G as the coating substance and a mixture of *n*-butanol, acetic acid and water (6 : 1.5 : 2.5) as the mobile phase. Apply separately 10 μl of each of the above two solutions to the plate. After developing and removal of the plate, dry in air. The spot in the chromatogram obtained with the test solution corresponds in position and colour to the spot in the chromatogram obtained with the reference solution.

Action To remove *heat* from the lung and relieve sore throat, and regulate the flow of *qi* of the liver and the stomach.

Indications Cough, sore throat and hoarseness due to *heat* in the lung; epigastic pain due to stagnation of *qi* of the liver and the stomach.

Usage and dosage 1.5-3 g.

Storage Preserve in a ventilated and dry place.

Semen Persicae
(桃仁, Taoren)

Peach Seed

Peach Seed is the dried ripe seed of *Prunus persica* (L.) Batsch or *Prunus davidiana* (Carr.) Franch. (Fam. Rosaceae). The fruit is collected when ripe. The seed is removed from sarcocarp and shell (endocarp), and dried in the sun.

Description *Seed of Prunus persica* Prolate-ovate, 1.2-1.8 cm long, 0.8-1.2 cm wide, 0.2-0.4 cm thick. Externally yellowish-brown to reddish-brown, with numerous granular protrudings. One end acute, expanded in the middle, the other end obtuse-rounded and slightly oblique, with relatively thin edge. A short linear hilum occurring by the acute end and a relatively distinct and slightly dark chalaza at the round end, with many longitudinal vascular bundles radiated from the chalaza. Testa thin, cotyledons 2, almost white and oily. Odour, slight; taste, slightly bitter.

Seed of Prunus davidiana Subovoid, smaller but thicker, about 0.9 cm long, 0.7 cm wide and 0.5 cm thick.

Identification *Powdered or isolated tissue of testa of Seed of Prunus persica* Stone cells yellow or yellowish-brown, conchoidal, helmet-shaped, bow-shaped or elliptic in lateral view, 54-153 μm high, up to 180 μm wide at the base, with one side wall thicker and more densely striated than the other side; subrounded, rounded, polygonal or sub-square in surface view, with large and dense pits in the cell bottom walls.

Powdered or isolated tissue of testa of Seed of Prunus davidiana Stone cells pale yellow, orange-yellow or orange-red, conchoidal, oblong, elliptic or stripe-shaped in lateral view, 81-198 (279) μm high, about 128 (198) μm wide; subrounded, subhexagonal, prolately polygonal or subsquare in surface view, with smaller pits in the unevenly thickened bottom walls.

Acid value Not more than 10.0 (Appendix IX P).

Carbonyl value Not more than 11.0 (Appendix IX P).

Processing *Semen Persicae* Eliminate foreign matter. Break to pieces before use.

Semen Persicae (blanched in boiling water) Peel the clean Semen Persicae as described under the method for rinsing in boiling water (Appendix II D). Break to pieces before use.

Semen Persicae (stir-baked) Stiry-bake the water rinsed Semen Persicae as described under the method for simple stir-baking (Appendix II D) to yellow colour. Break to pieces before use.

Action To promote blood circulation, eliminate blood stasis, and relax the bowels.

Indications Amenorrhea, dysmenorrhea, mass formation in the abdomen, traumatic injuries; constipation.

Usage and dosage 4.5-9 g.

Precaution Used with caution in pregnancy.

Storage Preserve in a cool and dry place, protected from moth.

Semen Pharbitidis
(牵牛子, Qianniuzi)

Pharbitis Seed

Pharbitis Seed is the dried ripe seed of *Pharbitis nil* (L.) Choisy or *Pharbitis purpurea* (L.) Voigt (Fam. Convolvulaceae). The plant is cut up in

the late autumn when the fruit is ripe but not dehiscent, dried in the sun. The seed is tapped out, and removed from foreign matter.

Description Orange segment-shaped, 4-8 mm long, 3-5 mm wide. Externally greyish-black (Heichou) or yellowish-white (Baichou). Dorsal side with 1 shallow longitudinal furrow and ventral side with a pointed and slightly dented hilum at the lower end of rib. Texture hard, in transverse section, lowish or yellowish-green crumpled and folded cotyledons visible, slightly oily. Odour, slight; taste pungent, bitter and numb.

Identification (1) Testa rimose when soak the drug in water giving a clear viscous and lubricate feeling when twisted with the fingers.
(2) Powder: Pale yellowish-brown. Epidermal cells of testa dark brown, irregular in shape, with lightly sinuous walls. Nonglandular hairs unicellular, yellowish-brown, slightly curved, 50-240 μm long. Secretory cavities visible in cotyledon fragments, rounded or elliptical, 35-106 μm in diameter. Clusters of calcium oxalate 10-25 μm in diameter. Fragments of palisade cells of testa and light band visible occasionally.
(3) To 2 g of the powder, prepare the solution in the same manner described under Assay as the reference drug solution. Dissolve the caffeic acid CRS and caffeoyl acetate CRS in methanol to produce a solution containing each 1 mg of per ml as the reference solution. Carry out the method for the thin layer chromatography (Appendix Ⅵ B), using silica G as the coating substance and the mixture of chloroform, methanol and formic acid (10 : 9 : 4) as the mobile phase. Apply separately 10-20 μl of each of the test solution under Assay and the reference drug solution, 10 μl of the reference solution to the plate. After developing and removal of the plate, dry in air. Spray with a 5% solution of phosphomolybdic acid TS, heat at 110℃ to the spot clear. The black-blue spot in the chromatogram obtained with the test solution corresponds in position and colour to the spot in the chromatogram obtained with the reference solution.

Water Not more than 10.0 per cent (Appendix Ⅸ H, method 1).

Total ash Not more than 5.0 per cent (Appendix Ⅸ K).

Acid-insoluble ash Not more than 1.0 per cent (Appendix Ⅸ K).

Extractives Carry out the cold maceration method for determination of ethanol-soluble extractives (Appendix Ⅹ A), using ethanol as the solvent, not less than 15.0 per cent.

Assay Carry out the method for high performance liquid chromatography (Appendix Ⅵ D).

Chromatographic system and system suitability Use octadecylsilane bonded silica gel as the stationary phase and acetonitrile as mobile phase A, 0.04% phosphoric acid solution (containing 2% isopropanol) as mobile B, elute in gradient as the following:

Time (min)	Mobile phase A (per cent V/V)	Mobile phase B (per cent V/V)
0-12	13	87
12-13	13→54	87→46
13-19	54	46

As detector a spectrophotometer set at 325 nm. The number of theoretical plates of the column is not less than 3000, calculated with the reference to the peak of caffeic acid.

Reference solution Dissolve a quantity of caffeic acid CRS and caffeic acid acetate CRS, accurately weighed, in methanol to prepare a solution containing 10 μg per ml, respectively.

Test solution Weigh accurately 2 g of the powder (through No. 4 sieve) into a Soxhlet's extractor, extract with a quantity of petroleum ether (60-90℃) under reflux for 2 hours, discard petroleum ether, evaporate the residue to dryness. Extract the residue with a mixture of chloroform and methanol (3 : 1) for 6 hours, evaporate the extract to a small quantity, transfer into a 10 ml volumetric flask, wash the container with the same solvent, combine the washings into the same volumetric flask. Dilute to volume, and mix well.

Procedure Inject accurately 5 μl of each of the reference solution and the test solution into the column, and calculate the content.
It contains not less than 0.20 per cent of the total amount of caffeic acid ($C_9H_8O_4$) and caffeic acid acetate ($C_{11}H_{12}O_4$), calculated with reference to the dried drug.

Processing *Semen Pharbitidis* Eliminate foreign matter. Break to pieces before use.

Semen Pharbitidis (stir-baked) Stir-bake the clean Semen Pharbitidis as described under the method for simple stir-baking (Appendix Ⅱ D) to slightly inflated. Break to pieces before use.

Action To cause drastic purgation for clearing away retained fluid, and kill worms.

Indications Anasarca with constipation and oliguria; dyspnea and cough caused by retained fluid; abdominal pain due to intestinal parasitosis; ascariasis, taeniasis.

Usage and dosage 3-6 g.

Precaution Contraindicated in pregnancy. Incompatible with Fructus Crotonis or Semen Crotonis Pulveratum.

Storage Preserve in a dry place.

Semen Phaseoli (赤小豆, Chixiaodou)

Rice Bean

Rice Bean is the dried ripe seed of *Phaseolus calcaratus* Roxb. or *Phaseolus angularis* Wight (Fam. Leguminosae). The plant is uprooted in autumn when the fruit is ripe but not dehiscent, and dried in the sun. The seed is collected, removed from foreign matter, and dried in the sun again.

Description *Seed of Phaseolus calcaratus* Oblong and slightly flattened. 5-8 mm long, 3-5 mm in diameter. Externally purplish-red. Lustrousless or somewhat lustrous, hilum linear-raised at one side and inclined to one end, white, about 2/3 in length of the seed, dented and forming a longitudinal furrow in the middle; and with an indistinct ridge at the other side. Texture hard, uneasily broken, cotyledons 2, milky-white. Odour, slight; taste, slightly sweet.

Seed of Phaseolus angularis Short cylindrical, both ends slightly truncate or obtusely rounded, 4-6 mm in diameter. Externally dark brownish-red, lustrous, hilum not raised.

Identification *Seed of Phaseolus calcaratus* Transverse section: Epidermal cells of testa consisting of 1 row palisade cells, 2 row in hilum, containing reddish-brown substances, light band distinct. Pillar cells 1 row, dumbbell-shaped, underneath ranged 10 rows of parenchymatous cells with the

inner cells dilapidated. Cotyledon cells containing numerous starch granules and fine prisms and clusters of calcium oxalate. a caruncle occurring at outside the palisade cells in hilum, a tracheid island occurring inside, elliptical, cell walls reticulate thickened, with actinenchyma in both sides, cells stellar, with large intercellular space.

Seed of Phaseolus angularis Fine calcium oxalate prisms occasionally visible in cotyledon cells, containing no clusters.

Action To cause urination, counteract *toxicity*, and promote the drainage of pus.

Indications Edema; jaundice with dark urine; acute rheumatic arthritis; carbuncles, boils, appendicitis.

Usage and dosage 9-30 g; for external use, appropriate quantity is ground into powder and applied topically after mixing with liquid.

Storage Preserve in a dry place, protected from moth.

Semen Plantaginis (车前子, Cheqianzi)

Plantain Seed

Plantain Seed is the dried ripe seed of *Plantago asiatica* L. or *Plantago depressa* Willd. (Fam. Plantaginaceae). The fruit-spike is collected in summer and autumn when the seed is ripe, and dried in the sun. The seed is rubbed out and removed from foreign matter.

Description Ellipsoid, irregularly oblong or triangular oblong, slightly flattened, about 2 mm long, 1 mm wide. Externally yellowish-brown to dark brown, with fine wrinkles, and a greyish-white concave pointed hilum on one side. Texture hard. Odour, slight; taste, weak.

Identification (1) *Seed of Plantago asiatica* Powder: Dark yellowish-brown. The outer epidermal cells of testa subsquare or slightly elongated tangentially in sectional view, with mucilaginous walls. The inner epidermal cells of testa subrectangular in surface view, 5-19 μm in diameter, up to about 83 μm long, thin-walled, slightly sinuous, usually parqueted. The endosperm cell walls heavily thickened, filled with small aleurone grains.

Seed of Plantago depressa The inner epidermal cells of testa relatively small, 5-15 μm in diameter, 11-45 μm long. (2) Shake 0.1 g of the drug with 3 ml of water, allow to stand for 30 minutes and filter. To the filtrate add 3 ml of dilute hydrochloric acid, boil for 1 minute, cool, neutralize with sodium hydroxide TS, add 1 ml of alkaline cupric tartarate TS, heat on a water bath; a red precipitate is produced.

Water Not more than 12.0 per cent (Appendix Ⅸ H, method 1).

Total ash Not more than 6.0 per cent (Appendix Ⅸ K).

Acid-insoluble ash Not more than 2.0 per cent (Appendix Ⅸ K).

Swelling Capacity Weigh accurately 1 g of the drug, carry out the method for determination of swelling capacity (Appendix Ⅸ O). Not less than 4.0.

Processing *Semen Plantaginis* Eliminate foreign matter.

Semen Plantaginis (processed with salt) Stir-bake the clean Semen Plantaginis as described under the method for processing with salt-water (Appendix Ⅱ D) until it cracks, spray with salt-water and stir-bake to dryness.

Externally dark-brown or yellowish-brown, odour, slightly aromatic. Taste, slightly salty. Carry out the method described under Acid-insoluble ash, not more than 3.0 per cent, carry out the method described under Swelling capacity, not less than 5.0.

Action To remove *heat*, cause urination and eliminate *damp*, relieve dysuria, clear the eyes and promote expectoration.

Indications Edema; dysuria with difficult painful urination; diarrhea caused by *summer-damp*; inflammation of the eyes; cough caused by *phlegm-heat*.

Usage and dosage 9-15 g, decocted with wrapping.

Storage Preserve in a ventilated and dry place, protected from moisture.

Semen Platycladi (柏子仁, Baiziren)

Chinese Arborvitae Kernel

Chinese Arborvitae Kernel is the dried ripe kernel of *Platycladus orientalis* (L.) Franco (Fam. Cupressaceae). The ripe seed is collected in autumn and winter, dried in the sun, and removed from the testa.

Description Long ovoid or long elliptical, 4-7 mm long, 1.5-3 mm in diameter. Externally yellowish-white or pale yellowish-brown, covered with membranous tegmen, apex slightly acute, with a small dark brown point, base obtusely rounded. Texture soft, oily. Odour, slightly aromatic; taste, weak.

Acid value Not more than 40.0 (Appendix Ⅸ P).

Carbonyl value Not more than 30.0 (Appendix Ⅸ P).

Peroxide value Not more than 0.26 (Appendix Ⅸ P).

Processing *Semen Platycladi* Eliminate foreign matter and remaining testa.

Semen Platycladi (frost-like powder) Make the clean Semen Platycladi into frost-like powder as described under the method for frost-like powder (Appendix Ⅱ D).

Action To calm the nerves, to check excessive perspiration, and to relax the bowels.

Indications Insomnia with fidgetness and palpitation; night sweating due to *deficiency* of *yin*; constipation.

Usage and dosage 3-9 g.

Storage Preserve in a cool and dry place, protected from heat and moth.

Semen Pruni (郁李仁, Yuliren)

Chinese Dwarf Cherry Seed

Chinese Dwarf Cherry Seed is the dried ripe seed of *Prunus humilis* Bge., *Prunus japonica* Thunb. or *Prunus pedunculata* Maxim. (Fam. Rosaceae). The former two are known as "Xiaoliren" (small Chinese Dwarf Cherry Seed) and the latter is known as "Daliren" (large Chinese Dwarf Cherry

Seed). The ripe fruit is collected in summer and autumn, removed from the sarcocarp and the shells. The seed is collected, and dried.

Description *Xiaoliren* Ovoid, 5-8 mm long, 3-5 mm in diameter. Externally yellowish-white or pale brown, one end acute, and the other end obtuse, with a linear hilum on the edge of the acute end and a dark-coloured chalaza at the centre of the obtuse end from which many vascular bundles extend upwards. Testa thin, cotyledons 2, milky white, oily. Odour, slight; taste, slightly bitter.

Daliren 6-10 mm long, 5-7 mm in diameter, externally yellowish-brown.

Identification To 0.5 g of the powder in a stopper test tube, add 3 ml of 5% solution of sulfuric acid, mix well, hang a strip of trinitrophenol TP in the test tube, keep the TP a distance from the solution, and stopper tightly. Heat on a water bath at 40-50℃ for 10 minutes, the test paper turns to a red colour.

Acid value Not more than 10.0 (Appendix Ⅸ P).

Carbonyl value Not more than 3.0 (Appendix Ⅸ P).

Peroxide value Not more than 0.050 (Appendix Ⅸ P).

Assay Place about 20 g of the coarse power, accurately weighed, in a kjeldahl flask, add 150 ml of water, stopper tightly and immediately, allow to stand for 2 hours. Connect the condenser, distill and collect the distillate in a receiver containing 10 ml of water and 2 ml of ammonia TS. Cool on an ice bath until the distillate up to 200 ml. Stop the distillation, add 2 ml of potassium iodide TS to the distillate, and titrate with silver nitrate (0.1 mol/L) VS slowly until a yellowish-white opalescence is produced. Each ml of silver nitrate (0.1 mol/L) VS is equivalent to 91.48 mg of $C_{20}H_{27}NO_{11}$.
It contains not less than 1.5 per cent of amygdalin ($C_{20}H_{27}NO_{11}$).

Processing Eliminate foreign matter. Break to pieces before use.

Action To relax the bowles, subdue the upward *qi*, and cause urination.

Indications Stagnancy of undigested food with abdominal distension and constipation; weakness and edema of the legs with oliguria.

Usage and dosage 6-9 g.

Precaution Used with caution in pregnancy.

Storage Preserve in a cool and dry place, protected from moth.

Semen Raphani (莱菔子, Laifuzi)

Radish Seed

Radish Seed is the dried ripe seed of *Raphanus sativus* L. (Fam. Cruciferae). The plant is cut up in summer when the fruit is ripe, dried in the sun. The seed is rubbed out, removed from foreign matter, and dried again in the sun.

Description Subovoid or ellipsoidal, slightly flattened, 2.5-4 mm long, 2-3 mm wide. Externally yellowish-brown, reddish-brown or greyish-brown, with a dark brown round hilum at one end and several longitudinal furrows on one side. Testa thin and brittle, cotyledons 2, yellowish-white and oily. Odour, slight; taste, weak, slightly bitter and pungent.

Identification (1) To a small quantity of the powder, add a small piece of sodium hydroxide, heat on a flame and cool. Dissolve the mixture in 2 ml of water, and filter. Acidify 1 ml of the filtrate with 5% hydrochloric acid, the gas of hydrogen sulfide is evolved and a briliant brownish-black colour occurred on contacting with the freshly prepared lead acetate TP.
(2) To 1 g of the powder add 30 ml of ether, heat under reflux for 1 hour and discard the ether, and evaporate the drug residue to dryness. To the drug residue add 20 ml of methanol, heat under reflux for 1 hour, filter and evaporate the filtrate to dryness. Dissolve the residue with 2 ml of methanol as the test solution. Prepare a solution of 1 g reference drug of Semen Raphani in the same manner as the reference drug solution. Carry out the method for thin layer chromatography (Appendix Ⅵ B), using silica gel GF_{254} as the coating substance and the upper layer solution of ethyl acetate, formic acid and water (10 : 2 : 3) as the mobile phase. Apply separately 5 μl each of the two solutions to the plate. After developing and removal of the plate, dry in air. The fluorescence spots in the chromatogram obtained with the test solution correspond in position and colour to the spots in the chromatogram obtained with the reference solution under ultraviolet light at 254 nm. Spray with a 1% solution of vanillin in sulfuric acid-ethanol (10 : 90) and heat to the spots distinct. The spots in the chromatogram obtained with the test solution correspond in position and colour to the spots in the chromatogram obtained with the reference solution.

Water Not more than 8.0 per cent (Appendix Ⅸ H, Method 2).

Total ash Not more than 6.0 per cent (Appendix Ⅸ K).

Acid-insoluble ash Not more than 2.0 per cent (Appendix Ⅸ K).

Extractives Carry out the hot extraction method for determination of ethanol-soluble extractives (Appendix Ⅹ A), using ethanol as the solvent, not less than 10.0 per cent.

Processing *Semen Raphani* Eliminate foreign matter, wash clean and dry. Break to pieces before use.

Semen Raphani (*stir-baked*) Stir-bake the clean Semen Raphani as described under the method for simple stir-baking (Appendix Ⅱ D) to slightly expanded. Break to pieces before use.

Action To promote digestion and relieve abdominal distension, and relieve cough and resolve *phlegm*.

Indications Retention of undigested food with epigastric and abdominal distension and pain, and constipation; diarrhea due to stagnation of undigested food; cough and dyspnea with copious expectoration.

Usage and dosage 4.5-9 g.

Storage Preserve in a ventilated and dry place, protected from moth.

Semen Ricini (蓖麻子, Bimazi)

Castor Seed

Castor Seed is the dried ripe seed of *Ricinus communis* L. (Fam. Euphorbiaceae). The fruit is collected in autumn when ripe, dried in the sun, removed

from the pericarp, and the seed is gathered.

Description Ellipsoidal or ovoid, slightly flattened, 0.9-1.8 cm long, 0.5-1 cm wide. Externally smooth, alternately with greyish-white and blackish-brown or yellowish-brown and reddish-brown piebald striations. One side relatively even, bearing 1 prominent raphe, and the other side slightly raised. A greyish-white or pale brown, prominent caruncle at one end. Testa thin and brittle, endosperm plump, white and oily, cotyledons 2, thin. Odour, slight; taste, slightly bitter and pungent.

Processing Eliminte foreign matter, remove the testa and break to pieces before use.

Action To induce subsidence of swelling, remove toxic substances, and cause purgation.

Indications Carbuncles, boils and other pyogenic infections of the skin, sore throat, scrofula; constipation.

Usage and dosage For external use, appropriate quantity is pounded into paste and applied topically; also used in pills for oral administration.

Storage Preserve in a cool and dry place.

Semen Sesami Nigrum (黑芝麻, Heizhima)

Black Sesame

Black Sesame is the dried ripe seed of *Sesamum indicum* L. (Fam. Pedaliaceae). The plant is collected in autumn when the fruit is ripe, dried in the sun. The seed is gathered, removed from foreign matter, and dried in the sun.

Description Flattened-ovoid, about 3 mm long, and 2 mm wide. Externally black, smooth or reticulately wrinkled. A dotted brown raphe at the apex. Testa thin, cotyledons 2, white, oily. Odour, slight; taste sweet, slightly oily aromatic.

Identification (1) Macerate 1 g of the broken seed with 10 ml of petroleum ether (60-90℃) for 1 hour. Decant the supernatant to a test tube, add 10 ml of hydrochloric acid containing 0.1 g of sucrose, shake for 30 seconds, a pink colour is produced in the acid layer and gradually turns to red on standing.

(2) Triturate 0.5 g into pieces, add 10 ml of chloroform and macerate for 2 hours, filter, evaporate the filtrate to dryness, dissolve the residue in 1 ml of chloroform as the test solution. Dissolve sesamin CRS and β-sitosterol CRS separately in chloroform to prepare two solutions each containing 2 mg per ml as the reference solutions. Carry out the method for thin layer chromatography (Appendix VI B), using silica gel G as the coating substance and a mixture of cyclohexane, ether and ethyl acetate (20 : 5 : 2.5) as the mobile phase. Apply separately 5 μl of the test solution and 2 μl of each of the two reference solutions to the plate. After developing and removal of the plate, dry in air. Spray with 10% sulfuric acid in ethanol, and heat to the spot clear, the spots in the chromatogram obtained with the test solution correspond in position and colour to the spots in the chromatogram obtained with the reference solutions.

Processing *Semen Sesami Nigrum* Eliminate foreign matter, wash clean, dry in the sun. Break to pieces before use.

Semen Sesami Nigrum (stir-baked) Stir-bake the clean Semen Sesami Nigrum as described under the method for simple stir-baking (Appendix II D) until it cracks. Break to pieces before use.

Action To tonify the liver and the kidney, replenish vital essence and blood, and relax the bowels.

Indications Dizziness, blurred vision, tinnitus, impaired hearing, premature greying of the hair and beard; loss of hair after a serious disease; constipation.

Usage and dosage 9-15 g.

Storage Preserve in a ventilated and dry place, protected from moth.

Semen Sinapis (芥子, Jiezi)

Mustard Seed

Mustard Seed is the ripe seed of *Sinapis alba* L. or *Brassica juncea* (L.) Czern. et Coss. (Fam. Cruciferae). The former is known as "Bai Jiezi" (Semen Sinapis Albae). The latter is known as "Huang Jiezi" (Semen Brassicae Junceae). The plant is cut up in late summer and early autumn when the fruit is ripe, and dried in the sun. The seed is tapped out and removed from foreign matter.

Description *Bai Jiezi* Spherical, 1.5-2.5 mm in diameter. Externally greyish-white to pale yellow, finely reticulated, with an obvious point-like hilum. Testa thin and brittle, after cutting, white folded cotyledons visible, oily. Odour, slight; taste, pungent.

Huang Jiezi Relatively small, 1-2 mm in diameter. Externally yellow to brownish-yellow, a few dark reddish-brown. Odour, characterisitic and pungent when triturated and moistened with water.

Identification (1) Transverse section: *Bai Jiezi* Epidermal cells of teata consisting of mucilage cells having mucilage striations; hypodermis consisting of 2 rows of collenchyma cells; palisade cells consisting of 1 row of stone cells with thickened inner and lateral walls and thin outer wall. Endosperm consisting of 1 row subsquare cells, containing aleurone grains. Parenchy matous cells of cotyledons and radicle containing oil droplets and aleurone grains.

Huang Jiezi Epidermal cells of testa elongated tangentially; hypodermis consisting of 1 row of thin cells.

(2) To 1 g of the powder, add 50 ml of methanol, ultrasonicate for 1 hour, and filter. Evaporate the filtrate to dryness, and dissolve the residue in 5 ml of methanol as the test solution. Dissolve sinapine cyanide sulfonate CRS in methanol to produce a solution containing 1 mg per ml as the reference solution. Carry out the method for thin layer chromatography (Appendix VI B), using silica gel G as the coating substance and ethyl acetate-acetone-formic acid-water (5 : 3 : 1 : 0.5) as the mobile phase. Apply separately 5-10 μl of the test solution and the reference solution to the plate. After developing and removal of the plate, dry in air. Spray with a solution of diluted potassium iodobismuthate TS. The spots in the chromatography obtained with test solution correspond in position and colour to the spots in the chromatography obtained with the reference drug solution.

Water Carry out the method for determination of water

(Appendix Ⅹ H, method 1), not more than 14.0 per cent.

Total ash Not more than 6.0 per cent (Appendix Ⅸ K).

Acid-insoluble ash Not more than 1.0 per cent (Appendix Ⅸ K).

Extractives Carry out the cold maceration method for determination of water-soluble extractives (Appendix Ⅹ A), not less than 12.0 per cent.

Assay Carry out the method for high performance liquid chromatography (Appendix Ⅵ D).

Chromatographic system and system suitability Use phenyl bonded silica gel as the stationary phase and acetonitrile as mobile phase A, 3% acetic acid as mobile B. gradient elution as the following:

Time (min)	Mobile phase A (per cent V/V)	Mobile phase B (per cent V/V)
0-3	20→25	80→75
3-5	25→30	75→70
5-10	30	70

As detector a spectrophotometer set at 326 nm. The number of theoretical plates of the column is not less than 3000, calculated with the reference to the peak of sinapine.

Reference solution Dissolve a quantity of sinapine cyanide sulfonate CRS, accurately weighed, in mobile phase to prepare a solution containing 0.2 mg per ml as the reference solution.

Test solution Weigh accurately 1 g of the fine powder in a stopper conical flask, add 50 ml of methanol, ultrasonicate (power, not less than 250 W; frequence, not less than 20 kHz) for 20 minutes, and filter. Extract the residue 3 times in the same manner. Combine the filtrates and concentrate the filtrates to dryness. Dissolve the residue with the mobile phase and transfer to a 50 ml volumetric flask. Dilute with the mobile phase to volume, and mix well.

Procedure Inject accurately 10 μl of the reference solution and 10 μl of the test solution into the column, and calculate the content.

It contains not less than 0.50 per cent of sinapine, calculated as sinapine cyanide sulfonate ($C_{16}H_{24}NO_5 \cdot SCN$) with reference to the dried drug.

Processing *Semen Sinapis* Eliminate foreign matter. Break to pieces before use.

Semen Sinapis (*Stir-baked*) Stir-bake the clean Semen Sinapis as described under the method for simple stir-baking (Appendix Ⅱ D) until it becomes deep yellow and pungent scented. Break to pieces before use.

Action To relieve dyspnea and cough by eliminating *cold-phlegm*, reduce nodulation, and relieve pain by removing the obstruction of collaterals.

Indications Cough, asthma and distending pain of the chest caused by *cold-phlegm*; arthralgia accompanied with numbness due to obstruction of collaterals by *phlegm*; deep abscesses.

Usage and dosage 3-9 g; appropriate quantity for external use.

Storage Preserve in a ventilated and dry place, protected from moisture.

Semen Sojae Praeparatum (淡豆豉, Dandouchi)

Fermented Soybean

Fermented Soybean is the fermented preparation obtained from the ripe seed *Glycine max* (L.) Merr. (Fam. Leguminosae).

Preparation Decoct 70-100 g of each of Folium Mori and Herba Artemisiae Annuae with water, filter. Mix the filtrate with 1000 g of clean Semen Sojae until the liquid is exhausted, steam thoroughly, then take out the seeds, dry in air briefly, cover with decocted Folium Mori and Herba Artemisiae Annuae, and ferment until yellow hyphae appear completely. Remove the residue, wash clean, ferment again for 15-20 days until an aromatic odour is produced. Take out the fermented seeds, steam briefly, and dry.

Description Ellipsoidal, slightly flattened, 0.6-1 cm long, 0.5-0.7 cm in diameter. Externally black, shrunken. Texture soft, fracture brownish-black. Odour, aromatic; taste, slightly sweet.

Identification To 1 g of the broken drug, add 10 ml of water, boil for several minutes, filter. Apply 0.5 ml of the filtrate to a piece of filter pater, allow to dry, spray with 1% solution of indoquinone-acetic acid (10 : 1), dry, heat at 100-110℃ for about 10 minutes, a purplish-red colour is produced.

Other requirements To 1 g of the broken drug add 10 ml of water, macerate warmly on a 50-60℃ water bath for 1 hour, and filter. To 1 ml of the filtrate add 4 drops of each of 1% cupric sulfate solution and 40% potassium hydroxide solution, shake; purplish-red colour is produced.

Action To release the exterior, ease the mind, and relieve fever.

Indications Headache with mild heat or cold in common cold, vexation, oppressed feeling in the chest and insomnia.

Usage and dosage 6-12 g.

Storage Preserve in a ventilated and dry place, protected from moth.

Semen Sterculiae Lychnophorae (胖大海, Pangdahai)

Boat-fruited Sterculia Seed

Boat-fruited Sterculia Seed is the dried ripe seed of *Sterculia lychnophora* Hance (Fam. Sterculiacaeae).

Description Fusiform or ellipsoidal, 2-3 cm long, 1-1.5 cm in diameter. Apex obtuse-rounded, base somewhat acute and oblique, bearing a pale and rounded hilum. Externally brown or dark brown, somewhat lustrous, with irregular wrinkles. Testa extremely thin, fragile and easily fallen. Mesotesta relatively thick, blackish-brown, loose and easily broken, swelling to spongy-like when treated with water. Scattered resinous dots visible in the fracture. Endotesta can be stripped off from mesotesta, slightly coriaceus, with 2 plump endosperm, broad-ovoid; cotyledons 2, thin, adhering closely to the inner side of endosperm, similar to endosperm in size. Odour, slight; taste, weak, viscous on

chewing.

Identification (1) Macerate several seeds in an appropriate quantity of boiling water, allow to stand for several minutes, the seeds swelling to brown, translucent and spongy.
(2) To 0.2 g of the powder add 10 ml of water, heat on a water bath for 30 minutes, and filter. To 4 ml of the filtrate add 3 ml of sodium hydroxide TS and 5 ml of alkaline cupric tartrate TS, heat on a water bath, a red precipitate is produced.

Water Not more than 16.0 per cent (Appendix Ⅸ H, method 1).

Action To remove *heat* from the lung, cure sore throat, counteract toxicity and relax the bowels.

Indications Hoarseness, dry cough, dry and painful throat due to *heat* in the lung; constipation with headache and blood-shot eyes.

Usage and dosage 2-3 pieces, soaked in boiling water or decocted.

Storage Preserve in a dry place, protected from mould and moth.

Semen Strychni (马钱子, Maqianzi)

Nux Vomica

Nux Vomica is the dried ripe seed of *Strychnos nux-vomica* L. (Fam. Loganiaceae). The fruit is collected in winter, and the seed is gathered, and dried in the sun.

Description *Semen Strychni* Button-shaped, 1.5-3 cm in diameter, 0.3-0.6 cm thick, frequently one side prominent and the other slightly dented. Outer surface closely covered with greyish-brown or greyish-green silky hairs, radiating from centre to circumference, silky-lustrous. Edge slightly prominent, relatively thick, with a protrudent micropyle; a prominent dot-like hilum in the centre of the bottom surface. Texture hard, pale yellowish-white, endosperm visible in horizontal section, horny, cotyledons cordate, with 5-7 veins. Odour, slight; taste, extremely bitter.

Identification (1) Powder: Greyish-yellow. Non-glandular hairs unicellular, mostly broken, with very thickened and lignified walls, enlarged at base like a stone cell. Endosperm cells polygonal, thick-walled, containing fatty oil and aleurone grains.
(2) Extract 0.5 g of the powder with 5 ml of a mixture of chloroform-ethanol (10 : 1) and 0.5 ml of concentrated ammonia TS in a stopper conical flask by shaking for 5 minutes, allow to stand for 2 hours, filter and use the filtrate as the test solution. Dissolve a quantity of strychnine CRS and brucine CRS in chloroform to prepare a solution containing 2 mg of each per ml as the reference solution. Carry out the method for thin layer chromatography (Appendix Ⅵ B), using silica gel G as the coating substance and a mixture of toluene, acetone, ethanol and concentrate ammonia (4 : 5 : 0.6 : 0.4) as the mobile phase. Apply separately 10 μl each of the two solutions to the plate. After developing and removal of the plate, dry in air, spray with potassium iodobismuthate TS. The spots in the chromatogram obtained with the test solution correspond in position and colour to the spots in the chromatogram obtained with the reference solution.

Water Carry out the method for the determination of water (Appendix Ⅸ H, method 1), not more than 13.0 per cent.

Total ash Not more than 2.0 per cent (Appendix Ⅸ K).

Assay Carry out the method for high performance liquid chromatography (Appendix Ⅵ D).

Chromatographic system and system suitability Use octadecylsilane bonded silica gel as the stationary phase and a mixture of acetonitrile and a mixture solution of equal quantities of 0.01 mol/L sodium heptane sulfonate solution and 0.02 mol/L potassium dihydrogen phosphate solution (adjust pH to 2.8 with 10% phosphoric acid) (21 : 79) as the mobile phase. As detector a spectrophotometer set at 260 nm. The number of theoretical plates of the column is not less than 5000, calculate with the reference to the peak of strychnine.

Reference solution Dissolve 6 mg of strychnine CRS and 5 mg of brucine CRS, accurately weighed, in a 10 ml volumetric flask respectively and dilute with chloroform to volume, and mix well. Accurately measure each of 2 ml to a 10 ml volumetric flask, dilute with methanol to volume, and mix well. (containing 0.12 mg of strychnine and 0.1 mg of brucine per ml)

Test solution Weigh accurately 0.6 g of the powder (through No. 3 sieve), in a stopper conical flask, add 3 ml of sodium hydroxide TS, mix well, stand for 30 minutes. Add accurately 20 ml of chloroform, weigh, heat under reflux for 2 hours, allow to stand to cool, weigh again, replenish the loss of the weight with chloroform, shake thoroughly. Separate the extract, filter with filter paper spreaded with a small quantity of anhydrous sodium sulfate. Accurately measure 3 ml of the successive filtrate in a 10 ml volumetric flask, dilute with methanol to volume, and mix well.

Procedure Inject accurately 10 μl of each of the reference solution and the test solution, respectively, into the column, and calculate the content.
It contains not less than 1.20 per cent and not more than 2.20 per cent of strychnine ($C_{21}H_{22}N_2O_2$), not less than 0.80 per cent of brucine ($C_{23}H_{26}N_2O_4$), calculated with reference to the dried drug.

Processing *Semen Strychni* Eliminate foreign matter.

Semen Strychni (*processed*) Scald the clean Semen Strychni as described under the method for scalding (Appendix Ⅱ D) until inflated and turns into brown or dark brown.

Action To promote the flow of *qi* and blood in the collaterals, relieve pain, and promote the subsidence of swelling.

Indications Protracted arthritis, rheumatoid arthralgia; numbness and paralysis; sequela of poliomyelitis; traumatic injury; boils and sores.

Usage and dosage 0.3-0.6 g, used in pills or powder after being processed.

Precaution Not used unprocessed, in overdosage or in long term administration; contraindicated in pregnancy.

Storage Preserve in a dry place.

Semen Strychni Pulveratum (马钱子粉, Maqianzi Fen)

Nux Vomica Powder

Nux Vomica Powder is the product of processed Semen Strychni.

Processing Pulverize the Processed Semen Strychni to fine powder, carry out the Assay for Semen Strychni to determine the content of strychnine, then add a sufficient quantity of starch to make its content complies with the requirements, and mix well.

Description A yellowish-brown powder. Odour, slightly aromatic; taste, extremely bitter.

Identification Complies with Identification test (2) described under Semen Strychni.

Water Not more than 14.0 per cent (Appendix Ⅸ H, method 1).

Assay Carry out the Assay described under Semen Strychni. It contains not less than 0.78 per cent and not more than 0.82 per cent, of strychnine ($C_{21}H_{22}N_2O_2$) not less than 0.50 per cent of brucine ($C_{23}H_{26}N_2O_4$), calculated with reference to the dried drug.

Action and indications As described under Semen Strychni.

Usage and dosage 0.3-0.6 g, used in pills or powder.

Storage Preserve in tightly closed containers, stored in a dry place.

Semen Torreyae (榧子, Feizi)

Grand Torreya Seed

Grand Torreya Seed is the dried ripe seed of *Torreya grandis* Fort. (Fam. Taxaceae). The drug is collected in autumn when ripe, removed from the fleshy aril, washed clean, and dried in the sun.

Description Ovoid or prolate-ovoid, 2-3.5 cm long, 1.3-2 cm in diameter. Externally greyish-yellow or pale yellowish-brown, longitudinally wrinkled. One end obtuse, with a elliptical raphe; the other end slightly acute. Testa hard, about 1 mm thick. Kernel surface wrinkled; perisperm greyish-brown, membranous; endosperm yellowish-white, plump and oily. Odour, slight; taste, slightly sweet and astringent.

Processing Remove the shell (testa). Break to pieces before use.

Action To kill worms and relax bowels.

Indications Ankylostomiasis, ascariasis, taeniasis; abdominal pain and malnutrition caused by intestinal parasitosis in children; constipation.

Usage and dosage 9-15 g.

Storage Preserve in a cool and dry place, protected from moth.

Semen Trichosanthis (瓜蒌子, Gualouzi)

Snakegourd Seed

Snakegourd Seed is the dried ripe seed of *Trichosanthes kirilowii* Maxim. or *Trichosanthes rosthornii* Harms (Fam. Cucurbitaceae). The ripe fruit is picked in autumn and dissected. The seed is collected, washed clean, and dried in the sun.

Description *Seed of Trichosanthes kirilowii* Flattened-elliptical, 12-15 mm long, 6-10 mm wide, about 3.5 mm thick. Externally pale brown to brown, smooth, with a circle of furrow along the edge. Apex relatively acute, with a hilum, base obtuse or relatively narrow. Testa hard; tegmen membraneous, greyish-green, cotyledons 2, yellowish-white, oily. Odour, slight; taste, weak.

Seed of Trichosanthes rosthornii Relatively large and flattened, 15-19 mm long, 8-10 mm wide, about 2.5 mm thick. Externally brown, the circular furrow distinct and rather near the inner part. Apex even and truncate.

Identification To 1 g of the powder in a stopper conical flask add 10 ml of petroleum ether (60-90℃), stopper tightly and ultrasonicate for 10 minutes, filter and use the filtrate as the test solution. Dissolve 3,29-dibenzoyl karounitriol CRS in chloroform to prepare a solution of 0.12 mg per ml as the reference solution. Carry out the method for thin layer chromatography (Appendix Ⅵ B), using silica gel GF_{254} as the coating substance and a mixture of cyclohexane and ethyl acetate (5 : 1) as the mobile phase. Apply separately 10 μl of each of the above two solutions to the plate. After developing and removal of the plate, dry in air, spray with a 10% sulfuric acid in ethanol, heat at 105℃ to the spots clear. The spot in the chromatogram obtained with the test solution corresponds in position and colour to the spot obtained with the reference solution.

Water Not more than 10.0 per cent (Appendix Ⅸ H, method 1).

Total ash Not more than 3.0 per cent (Appendix Ⅸ K).

Extractives Carry out the cold extraction method for determination of ethanol-soluble extractives (Appendix Ⅹ A), using petroleum ether (60-90℃) as the solvent, not less than 4.0 per cent.

Processing *Semen Trichosanthis* Eliminate foreign matter and blighted seeds, wash clean, and dry in the sun. Break to pieces before use.

Action To moisten the lung and resolve phlegm and cause laxation.

Indications Dry cough with sticky sputum; constipation.

Usage and dosage 9-15 g.

Precaution Incompatible with aconite and allied drugs.

Storage Preserve in a cool and dry place, protected from mould and moth.

Semen Trichosanthis Tostum (炒瓜蒌子, Chaogualouzi)

Stir-baking Snakegourd seed

Stir-baking Snakegourd seed is the processing product obtained from the seed of *Trichosanthes kirilowii* Maxim. or *Trichosanthes rosthornii* Harms. (Fam. Cucurbitaceae).

Processing Stir-bake the clean Semen Trichosanthis as described under the method for simple stir-baking (Appendix Ⅱ D) until inflated, take out, and cool in air.

Description Flattened-elliptical, 12-15 mm long, 6-10 mm wide, about 3.5 mm thick. Externally pale brown to brown, smooth, sometimes the charred-spots visible, with a circle of furrow along the edge. Apex relatively acute, with a hilum, base obtuse or relatively narrow. Testa hard;

tegmen membranous, grayish-green, cotyledons 2, yellowish-white, oily. Odour, slight; taste, weak.

Identification Weigh 1 g of the powder in a stopper conical flask, add 10 ml of petroleum ether (60-90℃), ultrasonicate for 10 minutes, filter; and use the filtrate as the test solution. Carry out the method for thin layer chromatography (Appendix Ⅵ B), using silica gel GF_{254} as the coating substance and a mixture of cyclohexane and ethyl acetate (5 : 1) as the mobile phase. Apply separately 10 μl of each of the test solution and the reference solution prepared in the "Assay" to the plate. After developing and removal of the plate, dry in air. Spray with 10% sulfuric acid in ethanol. Heat at 105℃ to the spots clear. The spots in the chromatogram obtained with the test solution correspond in position and colour to the spots in the chromatogram obtained with the reference solution.

Water Carry out the determination of water (Appendix Ⅸ H, method 1), not more than 10.0 per cent.

Total ash Not more than 5.0 per cent (Appendix Ⅸ K).

Assay Carry out the method for high performance liquid chromatography (Appendix Ⅵ D).

Chromatographic system and system suitability Use octadecylsilane bonded silica gel as the stationary phase, a mixture of methanol and water (93 : 7) as the mobile phase. As detector a spectrophotometer set at 230 nm. The number of theoretical plates of the column is not less than 2000, calculated with the reference to the peak of 3,29-dibenzoylkarounitriol CRS.

Reference solution Weigh accurately a quantity of 3,29-dibenzoylkarounitriol CRS, dissolve in chloroform to produce a solution containing 0.12 mg per ml as the reference solution.

Test solution Weigh accurately 1 g of the coarse powder, previously dried at 40℃ for 6 hours, to a 50 ml stopper conical flask, add accurately 10 ml of chloroform, weigh, ultrasonicate for 30 minutes (power, 250 W; frequency, 20 kHz), allow to stand to cool, weigh again, replenish the loss of the weight with chloroform. Mix well, and stand. Use the supernatant as the test solution.

Procedure Inject accurately 5 μl of the reference solution and the test solution into the column, respectively, and calculate the content.

It contains not less than 0.060 per cent of 3,29-dibenzoylkarounitriol ($C_{44}H_{58}O_5$), calculated with reference to the dried drug.

Action To moisten the lung and resolve phlegm and help the bowels to empty.

Indications Cough with thick phlegm due to dryness, constipation due to dryness in the intestine.

Usage and dosage 9-15 g.

Precaution It is antagonistic to Radix Aconiti Kusnezoffii.

Storage Preserve in a well closed, cool and dry place, protected from mould and moth.

Semen Trigonellae (胡芦巴, Huluba)

Common Fenugreek Seed

Common Fenugreek Seed is the dried ripe seed of *Trigonella foenum-graecum* L. (Fam. Leguminosae). The plant is collected in summer when the fruit is ripe, dried in the sun. The seed is tapped out and removed from foreign matter.

Description Slightly rhomboid or rectangular, 3-4 mm long, 2-3 mm wide, about 2 mm thick. Externally yellowish-green or yellowish-brown, smooth, with a deep oblique furrow on each of the two sides, and a point-like hilum at the intersection of the two furrows. Texture hard, uneasily broken. Testa thin, endosperm translucent and viscous; cotyledons 2, pale yellow, radicle curved, plump and long. Odour, aromatic; taste, slightly bitter.

Identification (1) Powder: Yellowish-brown. Palisade cells of epidermis 1-layer, with thickened outer and upper lateral walls, and a relatively large lumen at the lower part. Longitudinal pit-cannals fine and close. The light bend situated in outer part at 1/3 length of the cells with cuticle. Supporting cells 1 layer, somewhat dumbell-shaped, narrow at the upper end but broader at the lower end with linear striations on anticlinal walls. Endosperm mostly consisting of mucilage cells with highly thickened walls. Cotyledon cells containing aleurone grains and fatty oil droplets.

(2) To 1 g of the powder add 30 ml of petroleum ether (30-60℃), ultrasonicate for 30 minutes, filter and discard the filtrate, evaporate the residue to dryness. Add 30 ml of ethanol, ultrasonicate for 30 minutes, filter and evaporate the filtrate to dryness. Dissolve the residue with 1 ml methanol as the test solution. Dissolve trigonelline CRS in methanol to produce a solution containing 2 mg per ml as the reference solution. Carry out the method for thin layer chromatography (Appendix Ⅵ B), using silica gel G as the coating substance and a mixture of n-butanol, hydrochloride and ethyl acetate (8 : 3 : 1) as the mobile phase. Apply separately 6 μl of each of the two solutions to the plate. After developing and removal of the plate, dry in air. Spray with a mixture solution of potassium iodobismuthate TS and ferric chloride TS (2 : 1). The spot in the chromatogram obtained with the test solution corresponds in position and colour to the spot in the chromatogram obtained with the reference solution.

Water Not more than 15.0 per cent (Appendix Ⅸ H, method 1).

Total ash Not more than 5.0 per cent (Appendix Ⅸ K).

Acid-insoluble ash Not more than 1.0 per cent (Appendix Ⅸ K).

Extractives Carry out the hot extraction method for determination of ethanol-soluble extractives (Appendix Ⅹ A), using dilute ethanol TS as the solvent, not less than 18.0 per cent.

Assay Carry out the method for high performance liquid chromatography (Appendix Ⅵ D).

Chromatographic system and system suitability Use octadecylsilane bonded silica gel as the stationary phase and a mixture of methanol, 0.05% sodium dodecyl sulfonate and glacial acetic acid (20 : 80 : 0.1) as the mobile phase. As detector a spectrophotometer set at 265 nm. The number of theoretical plates of the column is not less than 4000, calculated with the reference to the peak of trigonelline.

Reference solution Dissolve a quantity of trigonelline CRS, accurately weighed, in 50% methanol to prepare a solution containing 60 μg per ml as the reference solution.

Test solution Weigh accurately 0.5 g of the powder in a conical flask, add 50 ml of 50% methanol, and weigh. Allow to stand for 1 hour, ultrasonicate (power, 300 W; frequency, 50 kHz) for 45 minutes, allow standing to cool and weigh again, replenish the loss of weight with 50% methanol and mix well. Filter and use the successive filtrate

as the test solution.

Procedure Inject accurately 10 μl of each of the reference solution and the test solution into the column, and calculate the content.
It contains not less than 0.45 per cent of trigonelline ($C_7H_7NO_2$), calculated with reference to the dried drug.

Processing *Semen Trigonellae* Eliminate foreign matter, wash clean and dry.

Semen Trigonellae (*processed with salt*) Stir-bake the clean Semen Trigonellae as described under the method for stir-baking with salt-water (Appendix Ⅱ D) until it becomes inflated and scenty. Break to pieces before use.

Action To warm the kidney, dispel cold, and relieve pain.

Indications *Cold* syndrome of the kidney due to *yang* deficiency marked by pain and coldness in the lower abdomen; hernia; weakness and edema of the legs caused by *cold-damp*.

Usage and dosage 4.5-9 g.

Storage Preserve in a dry place.

Semen Vaccariae (王不留行, Wangbuliuxing)

Cowherb Seed

Cowherb Seed is the dried ripe seed of *Vaccaria segetalis* (Neck.) Garcke (Fam. Caryophyllaceae). The plant is collected in summer when the fruit is ripe but not dehiscent, and dried in the sun, the seed is gathered, removed from foreign matter, and dried again in the sun.

Description Spheroidal, about 2 mm in diameter. Externally black, a few in reddish-brown, somewhat lustrous, with fine and dense granular protuberances and a concave longitudinal furrow on one side. Texture hard, endosperm white, embryo curved in a ring, cotyledons 2. Odour, slight; taste, slightly astringent and bitter.

Identification (1) Powder: Pale greyish-brown. Epidermal cells of testa reddish-brown or yellowish-brown, polygonal or elongated polygonal in surface view, 50-120 μm in diameter, anticlinal walls thickened, stellate or sinuate. Inner epidermal cells of testa pale yellowish-brown, subsquare, subrectangular or polygonal in surface view, anticlinal walls densely beaded, reticulated striations visible on surface. Endosperm cells polygonal, subsquare or subrectangular, lumina filled with starch granules and aleurone grains. Cotyledon cells containing fatty oil droplets.
(2) To 1.5 g of the powder add 20 ml of methanol, heat under reflux for 30 minutes, cool and filter, evaporate the filtrate to dryness. Dissolve the residue with 2 ml methanol as the test solution. Prepare a solution of 1.5 g reference drug of Semen Vaccariae in the same manner as the reference drug solution. Carry out the method for thin layer chromatography (Appendix Ⅵ B), using silica gel G as the coating substance and a mixture of chloroform, methanol and water (15 : 7 : 2, lower layer) as the mobile phase. Apply separately 10 μl of each of the two solutions to the plate. After developing and removal of the plate, dry in air. Spray with a solution of potassium iodobismuthate modified TS. The orange-red spot in the chromatogram obtained with the test solution corresponds in position and colour to the spot in the chromatogram obtained with the reference drug solution.

Water Not more than 12.0 per cent (Appendix Ⅸ H, method 1).

Total ash Not more than 4.0 per cent (Appendix Ⅸ K).

Acid-insoluble ash Not more than 1.0 per cent (Appendix Ⅸ K).

Extractives Carry out the hot extraction method for determination of ethanol-soluble extractives (Appendix Ⅹ A), using ethanol as the solvent, not less than 6.0 per cent.

Processing *Semen Vaccariae* Eliminate foreign matter.

Semen Vaccariae (*stir-baked*) Stir-bake the clean Semen Vaccariae as described under the method for simple stir-baking (Appendix Ⅱ D) until most of the seeds burst.

Action To promote the menstrual flow and the flow of milk, and cause the subsidence of swelling.

Indications Agalactia, amenorrhea, dysmenorrhea, mastitis with swelling and pain of the breast.

Usage and dosage 4.5-9 g.

Precaution Used with caution in pregnancy.

Storage Preserve in a dry place.

Semen Ziziphi Spinosae (酸枣仁, Suanzaoren)

Spine Date Seed

Spine Date Seed is the dried ripe seed of *Ziziphus jujuba* Mill. var. *spinosa* (Bunge) Hu ex H. F. Chou (Fam. Rhamnaceae). The ripe fruit is collected in later autumn and early winter. The seed is collected and removed from the pulp and shell (endocarp), and dried in the sun.

Description Oblate or flattened ellipsoidal, 5-9 mm long, 5-7 mm wide, about 3 mm thick. Externally purplish-red or purplish-brown, smooth, lustrous, some fissured. One surface even, with 1 raised longitudinal line in the centre; the other surface slightly raised. One end dented, showing a linear hilum; the other end having a finely raised chalaza. Testa fragile; endosperm white; cotyledons 2, pale yellow, oily. Odour, slight; taste, weak.

Identification (1) Powder: Brownish-red. Palisade cells of testa brownish-red, polygonal in surface view, about 15 μm in diameter, with thickened and lignified walls, small lumen. Cells of tegmen brownish-yellow, rectangular or subsquare with beaded and lignified anticlinal walls in surface view. Epidermal cells of cotyledon containing fine clusters or prisms of calcium oxalate.
(2) To 1 g of the powder add 30 ml of methanol, heat under reflux for 1 hour and filter. Evaporate the filtrate to dryness, dissolve the residue in 0.5 ml of methanol used as the test solution. Dissolve jujuboside A CRS and jujuboside B CRS in methanol to produce a mixture containing 1 mg of each per ml as the reference solution. Carry out the method for thin layer chromatography (Appendix Ⅵ B), using silica gel G as the coating substance, and *n*-butanol saturated with water as the mobile phase. Apply separately to the plate 10 μl of each of the two solutions. After developing and removal of the plate, dry in air, spary with 1% solution of vanillin in sulfuric acid, and examine immediately. The spots in the chromatogram obtained with the test solution

correspond in position and colour to the spots in the chromatogram obtained with the reference solution.

Foreign matter Not more than 5 per cent (Appendix Ⅸ A).

Processing *Semen Ziziphi Spinosae* Remove the remained shells. Break to pieces before use.

Semen Ziziphi Spinosae (*stir-baked*) Stir-bake the clean Semen Ziziphi Spinosae as described under the method for simple stir-baking (Appendix Ⅱ D) to inflated and the colour slightly draken. Break to pieces before use.

Action To replenish the liver, cause tranquilizatio, arrest excessive perspiration, and promote the production of body fluid.

Indications Insomnia, dream-disturbed sleep; excessive sweating due to debility; thirst due to consumption of body fluid.

Usage and dosage 9-15 g.

Storage Preserve in a cool and dry place, protected from moth.

Spica Prunellae (夏枯草, Xiakucao)

Common Selfheal Fruit-Spike

Common Selfheal Fruit-Spike is the dried fruit-spike of *Prunella vulgaris* L. (Fam. Labiatae). The drug is collected in summer when the spike becomes brownish-red, removed from foreign matter, and dried in the sun.

Description Cylindrical, somewhat flattened, 1.5-8 cm long, 0.8-1.5 cm in diameter; pale brown to brownish-red. The whole spike composed of up to ten or more whorls of persistent calyx and bracts, each whorl with two opposite bracts, fan-shaped, apex acuminate, striations of vein distinct, the outer surface with white hairs. Each bract with three flowers, the corolla often fallen off, persistent calyx bilabiate, with four small brown ovoid nutlets, with white convex at the acute end. Texture light, Odour, slight; taste, weak.

Identification Heat under reflux 1 g of the powder in 20 ml of ethanol for 1 hour, filter, evaporate the filtrate to dryness, macerate the residue with two 15 ml-quantity of petroleum ether (30-60℃) for about 2 minutes, discard the petroleum ether solution and dissolve the residue in 1 ml of ethanol as the test solution. Dissolve ursolic acid CRS in ethanol to prepare a solution containing 1 mg per ml as the reference solution. Carry out the method for thin layer chromatography (Appendix Ⅵ B), using silica gel G as the coating substance and a mixture of cyclohexane, chloroform, ethyl acetate and glacial acetic acid (20 : 5 : 8 : 0.5) as the mobile phase. Apply separately 2 μl of each of the two solutions to the plate. After developing and removal of the plate, dry in air, spray with 10% surfuric acid in ethanol, heat at 100℃ to the spots clear, examine under daylight and ultraviolet light at 365 nm, respectively. The spot or fluorescent spot in the chromatogram obtained with the test solution corresponds in position and colour to the spot in the chromatogram obtained with the reference solution.

Water Not more than 14.0 per cent (Appendix Ⅸ H, method 1).

Total ash Not more than 12.0 per cent (Appendix Ⅸ K).

Acid-insoluble ash Not more than 4.0 per cent (Appendix Ⅸ K).

Extractives Carry out the hot extraction method for determination of water-soluble extractives (Appendix Ⅹ A), not less than 10.0 per cent.

Assay Carry out the method for high performance liquid chromatography (Appendix Ⅵ D).

Chromatographic system and system suitability Use octadecylsilane bonded silica gel as the stationary phase and a mixture of methanol and water (88 : 12) as the mobile phase. As detector a spectrophotometer set at 210 nm. The number of theoretical plates of the column is not less than 4000, calculated with reference to the peak of ursolic acid.

Reference solution Weigh accurately a quantity of ursolic acid CRS dried previously to constant weight at 105℃, add anhydrous ethanol to produce a solution of 0.12 mg per ml.

Test solution Weigh accurately 2 g of the powder (through No. 2 sieve) in a Soxhlet's extractor, add a quantity of ether and macerate overnight, heat under reflux for 6 hours, recover the solvent. Macerate the residue with two 15 ml-quantity of petroleum ether (60-90℃) for 2 minutes, discard the petroleum ether solution, evaporate to dryness. Dissolve the residue in anhydrous ethanol and transfer into a 10 ml volumetric flask, add anhydrous ethanol to volume. Measure accurately 1 ml to a 10 ml volumetric flask, dilute with anhydrous ethanol to volume and mix well.

Procedure Inject accurately 20 μl of each of the two solutions into the column, and calculate the content.
It contains not less than 0.12 per cent of ursolic acid ($C_{30}H_{48}O_3$), calculated with reference to the dried drug.

Action To quench *fire* of the liver and counteract inflammation of the eyes, and reduce nodulation and induce subsidence of swelling.

Indications Inflammation of the eyes, ophthalmalgia at night, headache and dizziness; scrofula, goitre, mastitis with swelling and pain, hyperplasia of breast; hypertension.

Usage and dosage 9-15 g.

Storage Preserve in a dry place.

Preparation Extractum Prunellae Inspissatum.

Spica Schizonepetae (荆芥穗, Jingjiesui)

Fineleaf Schizonepeta Spike

Fineleaf Schizonepeta Spike is the dried fruit-spike of *Sesamum indicum* L. (Fam. Labiatae). The drug is collected in summer and autumn when the spike becomes green, removed from foreign matter, and dried in the sun.

Description Spike cylindrical-shaped, 3-15 cm long, about 7 mm in diameter. Corolla often fallen off, persistent calyx yellowish-green, campanulate, fragile, easily broken, with small brownish-black nutlets. Odour, aromatic; taste, pungent, and slightly astringent.

Identification (1) Powder: Yellowish-brown. Epidermal cells of persistent calyx with deeply sinuous anticlinal walls. Glandular scales with a 8-celled head, 95-110 μm in diameter, and an unicellular stalk, brownish-yellow. Small glandular hair with a 1-2 celled head and an unicellular stalk. Non-glandular hair 1-6 celled, mostly with warty walls. Cells of exocarp polygonal in surface view, with mucilaginous

walls, and containing brown contents. Stone cells of endocarp pale brown, with deeply sinuous anticlinal walls, and densely pitted. Fibre bundles with straight or slight sinuous walls.

(2) To 0.8 g of the coarse powder, add 20 ml of petroleum ether (60-90℃), stopper tightly, shake frequently, and allow to stand overnight. Filter and evaporate the filtrate to 1 ml as the test solution. Prepare a solution of 0.8 g of Spica Schizonepetae reference drug as the reference drug solution in the same manner. Dissolve l-pulegone CRS in petroleum ether (60-90℃) to produce a solution containing 4 mg per ml as the reference solution. Carry out the method for thin layer chromatography (Appendix Ⅵ B), using silica gel G mixed with sodium carboxymethylcellulose as the coating substance and a mixture of petroleum ether (60-90℃) and ethyl acetate (37 : 3) as the mobile phase. Apply separately 3 μl of the test solution, 10 μl of each of the reference solution and reference drug solution to the plate. After developing and removal of the plate, dry in air. Spray with 1% vanillin in sulfuric acid, and heat to the spots clear. The spots in the chromatogram obtained with the test solution correspond in position and colour to the spots in the chromatogram obtained with the reference solution and the reference drug solution.

Water Carry out the method for the determination of water (Appendix Ⅸ H, method 2), not more than 12.0 per cent.

Extractives Carry out the cold maceration method for determination of ethanol-soluble extractives (Appendix Ⅹ A), using ethanol as the solvent, not less than 8.0 per cent.

Assay ***Volatile oil*** Carry out the method for determination of volatile oil (Appendix Ⅹ D).

It contains not less than 0.4 per cent (ml/g) of volatile oil.

l-Pulegone Carry out the method for high performance liquid chromatography (Appendix Ⅵ D).

Chromatographic system and system suitability Use octadecylsilane bonded silica gel as the stationary phase, a mixture of methanol and water (80 : 20) as the mobile phase. As detector a spectrophotometer set at 252 nm. The number of theoretical plates of the column is not less than 3000, calculated with the reference to the peak of l-pulegone.

Reference solution Weigh accurately a quantity of l-pulegone CRS, dissolve in methanol to produce a solution containing 20 μg per ml as the reference solution.

Test solution Weigh accurately 0.5 g of the coarse powder (through No. 2 sieve) to a stopper conical flask, add 10 ml of methanol, ultrasonicate for 20 minutes (power, 250 W; frequency, 50 kHz), filter, add 10 ml of methanol to the residue, extract again for one time as the same manner. Transfer the filtrate to a 25 ml volumetric flask, wash the container with a quantity of methanol for two times, filter the washings to the same flask, dilute with methanol to volume. Mix well.

Procedure Inject accurately 10 μl of the reference solution and the test solution into the column respectively, and calculate the content.

It contains not less than 0.080 per cent of l-pulegone ($C_{10}H_{16}O$), calculated with reference to the dried drug.

Action To disperse wind to release the exterior and induce eruptions.

Indications Common cold, headache, measles, rubella, pyocutaneous diseases at the early stage.

Usage and dosage 5-10 g.

Storage Preserve in a cool and dry place.

Spica Schizonepetae Carbonisata (荆芥穗炭, Jingjiesuitan)

Carbonized Fineleaf Schizonepeta Spike

Carbonized Fineleaf Schizonepeta Spike is the product of processed Fineleaf Schizonepeta Spike.

Processing Stir-bake the section of Spica Schizonepetae as described under the method for carbonizing by stir-baking (Appendix Ⅱ D) until its surface becomes charred-black and inside becomes charred-yellow, take out, dry in the air.

Description The sections irregular in shape, about 5 mm long, surface dark-brown. Corolla often fallen off, persistent calyx campanulate, 5-toothed at apex, dark-brown, small nutlets brownish-black. Odour, charred-aromatic; taste, bitter and pungent.

Identification Cells of exocarp polygonal in surface view, with mucilaginous walls, and containing brown contents. Stone cells of endocarp pale brown, with deeply sinuous anticlinal walls, and densely pitted. Fibre bundles with straight or slight sinuous walls. Stomata diacytic.

Water Carry out the method for the determination of water (Appendix Ⅸ H, method 2), not more than 12.0 per cent.

Extractives Carry out the hot extraction method for determination of ethanol-soluble extractives (Appendix Ⅹ A), using 70% ethanol as the solvent, not less than 13.0 per cent.

Action To astringe and arrest bleeding.

Indications Hemafecia, metrorrhagia and metrostaxis and postpartum anemic fainting.

Usage and dosage 5-10 g.

Storage Preserve in a cool and dry place.

Spina Gleditsiae (皂角刺, Zaojiaoci)

Chinese Honeylocust Spine

Chinese Honeylocust Spine is the dried spine of *Gleditsia sinensis* Lam. (Fam. Leguminosae). The drug is collected all year round, and dried, or cut into slices when fresh, and dried.

Description Consisting of main spines and 1-2 branched spines. Main spines elongated conical, 3-15 cm long or longer, 0.3-1 cm in diameter; branched spines 1-6 cm long, acute at apex. Externally purplish-brown or brown. Texture light, hard, uneasily broken. Slices 0.1-0.3 cm thick, usually tapering-tipped; wood yellowish-white, pith lax, pale reddish-brown; texture fragile, easily broken. Odour, slight; taste, weak.

Identification Transverse section: Epidermis consisting of 1 layer of cells covered with cuticle, sometimes unicellular non-glandular hairs found. Cortex consisting of 2-3 layers of parenchymatous cells, someones containing brownish-red substances. Pericycle fibre bundles in a discontinuous ring, surrounded by parenchymatous cells containing prisms of calcium oxalate occasionally and clusters rarely, usually accompanied with 1 or 2-3-grouped stone cells with thin walls. Phloem narrow. Cambium ring distinct. Xylem in

ring, xylary rays 1-2 cells wide. Pith wide, parenchymatous cells containing a few of starch granules.

Processing Eliminate foreign matter; for the unsliced spines, soak briefly, soften thoroughly, cut into thick slices and dry.

Action To cause subsidence of swelling, drain pus, and kill parasites.

Indications Carbuncles and boils at the early stage or formation of abscess difficult to burst; external use for scabies and leprosy.

Usage and dosage 3-9 g; for external use, appropriate quantity is steamed with vinegar and the juice applied topically.

Storage Preserve in a dry place.

Spora Lygodii
(海金沙, Haijinsha)

Japanese Climbing Fern Spore

Japanese Climbing Fern Spore is the dried ripe spores of *Lygodium japonicum* (Thunb.) Sw. (Fam. Lygodiaceae). The plant is collected in autumn when the spore has not fallen off, and dried in the sun. The spore is tapped out, removed from the stem and leaf.

Description Powder-like, brownish-yellow or pale brownish-yellow. Texture light and smooth, with lubricant feeling when twisted with the finger. Odour, slight; taste, weak.

Identification (1) Scatter a small quantity of spores on fire, a slightly bursting noise and a bright flame are produced.
(2) Powder: brownish-yellow. Spores tetrahedral or triangular conical; triphase conical in top view, Y-shaped fissures visible, subtriangular in lateral view, subrounded in bottom view, 60-85 μm in diameter, with granular sculptures in outer walls.

Acid-insoluble ash Not more than 15.0 per cent (Appendix IX K).

Action To remove *damp-heat* and relieve dysuria.

Indications Pyretic stranguria, urolithiasis, hematuria, chyluria, urethral pain with difficult urination.

Usage and dosage 6-15 g.

Storage Preserve in a dry place.

Squama Manis
(穿山甲, Chuanshanjia)

Pangolin Scales

Pangolin Scales is the scale of *Manis pentadactyla* Linnaeus (Fam. Manidae). The scales is collected, washed clean, and dried in the sun.

Description In fan-shape, triangular, rhombic, shield-shaped flattened plates, or sometimes half-folded, central part relatively thick, marginal part thin, varying in sizes, 0.7-5 cm in length and width. The outer suface blackish-brown or yellowish-brown, lustrous, broad end with dozens of regularly arranged longitudinal lines and several transverse lines, narrow end smooth. Inner surface relatively light coloured, with 1 obviously raised arciform transverse crest line at the central part and several fine parallel lines under-neath. Horny, translucent, texture tenacious and elastic, uneasily broken. Odour, slightly stinking; taste, weak.

Identification To 1 g of the powder add 60 ml of chloroform, heat under reflux on a water bath for 4 hours, cool, filter, evaporate the filtrate to dryness, dissolve the residue in 1 ml of chloroform as the test solution. Prepare a solution of Squama Manis reference drug in the same manner as the reference drug solution. Carry out the method for thin layer chromatography (Appendix VI B), using silica gel G as the coating substance and a mixture of benzene and acetone (20 : 1) as the mobile phase. Apply separately 10 μl of each of the above two solutions to the plate. After developing and removal of the plate, dry in air, spray with a solution of acetic anhydride and sulfuric acid (9 : 1), heat at 80℃ for several minutes. Examine in daylight, the spots in the chromatogram obtained with the test solution correspond in position and colour to the spots in the chromatogram obtained with the reference drug solution. Examine under ultraviolet light at 365 nm, the fluorescent spots in the chromatogram obtained with the test solution correspond in position and colour to the spots in the chromatogram obtained with the reference drug solution.

Foreign matter Not more than 4 per cent (Appendix IX A).

Processing *Squama manis* Eliminate foreign matter, wash clean, and dry.

Squama manis (*scalded with sand*) Grade clean Squama manis according to size, scald with sand as described under the method for processing with scalding (Appendix II D) to swell, wash clean, and dry. Break to pieces before use.

Squama manis (*processed with vinegar*) Grade clean Squama manis according to size, scald in the same manner, quench with vinegar, take out, and dry. Break to pieces before use.
Using 30 kg of vinegar per 100 kg of Squama manis.

Action To stimulate menstrual flow and the flow of milk, cause the subsidence of swelling and promote the discharge of pus, and eliminate *wind* from the collaterals.

Indications Amenorrhea with mass formation in the abdomen; agalactia; carbuncles and sores; arthralgia with numbness and muscular contracture.

Usage and dosage 5-9 g, used after being processed.

Precaution Used with caution in pregnancy.

Storage Preserve in a dry place.

Stalactitum
(钟乳石, Zhongrushi)

Stalactite

Stalactite is a mineral of carbonates of calcite group, containing mainly calcium carbonate ($CaCO_3$). The drug is collected, removed from foreign matter, washed clean, and dried in the sun.

Description Aggregates crystalith-shaped, somewhat conical or cylindrical. Externally white, greyish-white or brownish-yellow, rough and uneven. Texture heavy and hard, fracture relatively even, white to pale greyish-white, showing bright twinkle against light, often with a rounded hole near the centre, surrounded by numerous pale orangish-yellow,

concentrical rings. Odour, slight; taste, slightly salty.

Identification To the drug, add dropwise dilute hydrochloric acid TS, effervescence is produced; the solution yields the reactions characterisitic of calcium salts (Appendix Ⅳ).

Assay Dissolve about 0.12 g of the fine powder, accurately weighed, in 5 ml of dilute hydrochloric acid TS in a conical flask by heating. Add 150 ml of water and 1 drop of methyl red IS, add dropwise potassium hydroxide TS until the solution turns to yellow, then add 10 ml in excess. Add a small quantity of calcein indicator mixture, titrate with disodium edetate (0.05 mol/L) VS until the yellowish-green fluorescence disappears and turns to orange. Each ml of disodium edetate (0.05 mol/L) VS is equivalent to 5.004 mg of calcium carbonate ($CaCO_3$).
It contains not less than 95.0 per cent of calcium carbonate ($CaCO_3$).

Processing *Stalactitum* Wash clean, break to small pieces and dry.

Stalactitum (calcined) Calcine the clean pieces of Stalactitum as described under the method for calcining openly (Appendix Ⅱ D) to red thoroughly.

Action To warm the lung, relieve asthma, and inhibit acid secretion.

Indications Asthma and cough caused by *cold-phlegm*; feeling of coldness and pain in the loins and kness; gastric pain with acid regurgitation; cessation of the milk secretion.

Usage and dosage 3-9 g.

Storage Preserve in a dry place.

Stamen Nelumbinis (莲须, Lianxu)

Lotus Stamen

Lotus Stamen is the dried stamen of *Nelumbo nucifera* Gaertn. (Fam. Nymphaeaceae). The drug is collected at flowering period on fine days in summer, and dried in the sun under the cover of paper, or in shade.

Description Linear. Anthers twisted, longitudinally split, 1.2-1.5 cm long, about 0.1 cm in diameter, pale yellow or brownish-yellow. Filaments slender, slightly curved, 1.5-1.8 cm long, pale purple. Odour, slightly aromatic; taste, astringent.

Identification Powder: Yellowish-brown. Pollen grains subspherical or oblong, 45-86 μm in diametre, with 3 pit canals and granularly reticulate on the surface. Epidermal cells rectangular, polygonal or irregular, anticlinal walls sinuous; outer walls papillated in lateral view. cells in Inner wall of pollen pocket strip-shaped, thick-walled, and the lumina containing yellowish-brown or reddish-brown contents. Vessels spiral.

Action To strengthen the kindey and arrest seminal emission.

Indications Seminal emission, spermatorrhea, excessive leukorrhea, frequent urination.

Usage and dosage 3-5 g.

Storage Preserve in a dry place, protected from mould.

Stigma Croci (西红花, Xihonghua)

Saffron

Saffron is the dried stigma of *Crocus sativus* L. (Fam. Iridaceae).

Description Linear, 3-branched, about 3 cm long, dark red, the upper part broader and slightly flattened, the margin of apex irregularly dentate, with a short slit at the inner side, sometimes a small piece of yellow style remained at the lower end. Texture light, lax and soft, without oily lustre, brittle and short after drying. Odour, characteristic, slightly irritant; taste, slightly bitter.

Identification (1) Powder: Orange-red. Epidermal cells long stripe-shaped in surface view, thin-walled, slightly sinuous, sometimes the outer walls protruding and showing papillae, with indistinct fine striations. Terminal epidermal cells of stigma papillated, 26-56 μm in diameter, with sparse stirations on surface. Parenchymatous cells crowded with crystals of calcium oxalate, granular, round-fascicled, fusiform or subsquare, 2-14 μm in diameter.
(2) Macerate a small quantity of the drug in water, the orange-yellow colour descends vertically and diffuses slowly, while the solution is yellow without precipitation. Stigma looks like a loudspeaker with short chink which is not broken in a short time when picked with a needle.
(3) Place small quantity of the drug on a white porcelain plate, add 1 drop of sulfuric acid, a blue to purple colour is produced, which turns to reddish-brown or brown gradually.
(4) Measure the absorbance of the solution obtained under the test for Absorbance at 458 nm (Appendix Ⅴ A), the ratio of the absorbance at 458 nm to that at 432 nm is 0.85-0.90.
(5) To 20 mg of the powder add 1 ml of methanol, ultrasonicate for 10 minutes, allow to stand until clear and use the supernatant as the test solution. Prepare a solution of 20 mg of Stigma Croci reference drug in the same manner as the reference drug solution. Carry out the method for thin-layer chromatography (Appendix Ⅵ B), using silica gel G as the coating substance and a mixture of ethyl acetate-methanol-water (100 : 16.5 : 13.5) as the mobile phase. Apply separately to the plate 3-5 μl of each of the above two solutions. After developing and removal of the plate, dry in air, examine under the daylight and ultra-violet light at 365 nm. The spots or fluorescent spots in the chromatogram obtained with the test solution correspond in position and colour to the spots obtained with the reference drug solution (Protected from light).

Loss on drying Dry 2 g at 105℃ for 6 hours, loses not more than 12.0 per cent (Appendix Ⅸ G).

Total ash Not more than 7.5 per cent (Appendix Ⅸ K).

Acid-insoluble ash Not more than 1.5 per cent (Appendix Ⅸ K).

Absorbance Dry the drug in vacuum desiccator over silica gel for 24 hours and grind into fine powder. Weigh accurately 30 mg into a Soxhlet's extractor, extract with 70 ml of ethanol under reflux and cool. Transfer the extract to a 100 ml volumetric flask, filter, if necessary. Wash the extractor with methanol, transfer the washings into the volumetric flask, dilute with methanol to volume and mix well. Measure accurately 5 ml to a 50 ml volumetric flask, dilute with methanol to volume and mix well. Carry out the

method for ultraviolet spectrophotometry and colourimetry (Appendix V A), measure the absorbance at 432 nm, not less than 0.50.

Extractives Carry out the hot extraction method for determination of ethanol-soluble extractives (Appendix X A), using 30% ethanol as the solvent, not less than 55.0 per cent.

Assay Operate protected from light. Carry out the method for high performance liquid chromatography (Appendix VI D).

Chromatographic system and system suitability Use octadecylsilane bonded silica gel as the stationary phase and a mixture of methanol and water (45 : 55) as the mobile phase. As detector a spectrophotometer set at 440 nm. The number of theoretical plates of the column is not less than 3500, calculated with reference to the peak of crocin-Ⅰ.

Reference solution Weigh accurately a quantity of crocin-Ⅰ CRS and crocin-Ⅱ CRS, add dilute ethanol to produce the solutions of 30 μg per ml and 12 μg per ml, respectively.

Test solution Weigh accurately 10 mg of the powder (through No. 3 sieve) in a 50 ml amber coloured volumetric flask, add a quantity of dilute ethanol TS, ultrasonicate in the ice bath for 20 minutes; allow to stand to cool, add dilute ethanol TS to volume and mix well. Filter and use the successive filtrate as the test solution.

Procedure Inject accurately 10 μl of each of the two solutions into the column and calculate the content.

It contains not less than 10.0 per cent of the total amount of crocin-Ⅰ ($C_{44}H_{64}O_{24}$) and crocin-Ⅱ ($C_{38}H_{54}O_{19}$), calculated with reference to the dried drug.

Action To activate blood circulation and eliminate blood stasis, remove *heat* from blood and counteract *toxicity*, and calm the nerves.

Indications Amenorrhea with abdominal mass formation; blood stasis after childbirth; eruptions in infectious diseases; emotional dejection, mania.

Usage and dosage 3-9 g.

Precaution Used with caution in pregnancy.

Storage Preserve in tightly closed containers, stored in a cool and dry place, protected from light.

Styrax
(苏合香, Suhexiang)

Storax

Storax is the purified balsam obtained from the trunk of *Liquidambar orientalis* Mill. (Fam. Hamamelidaceae).

Description A semifluid viscid liquid, brownish-yellow or dark brown, translucent; odour aromatic.

Soluble in 90% ethanol, carbon disulfide, chloroform or glacial acetic acid; slightly soluble in ether.

Identification (1) Mix 1 g with 3 g of finely powdered sand, add 5 ml of potassium permanganate TS and warm gently, a distinct odour of benzaldehyde is produced.

(2) Dissolve 1 g of the drug in 10 ml of ethyl ether, use the supernatant as the test solution. Dissolve cannamic aldehyde CRS and cinnamic acid CRS in ethyl ether to produce a solution containing 1 mg of each per ml as the reference solution respectively. Carry out the method for thin layer chromatography (Appendix VI B), using silica gel GF_{254} mixed with sodium carboxymethylcellulose as the coating substance and a mixture of petroleum ether (30-60℃), *n*-hexane, ethyl formate and formic acid (10 : 30 : 15 : 1) as the mobile phase. Apply separately to the plate 2 μl of the test solution and 1 μl of the reference solution. After developing at 10-15℃ and removal of the plate, dry in air and examine under ultraviolet light at 254 nm. The spots in the chromatogram obtained with the test solution correspond in position and colour to the spots in the chromatogram obtained with the reference solution.

Acid value 52-76 (Appendix Ⅸ N).

Saponification value 160-190 (Appendix Ⅸ N).

Assay Carry out the method for high performance liquid chromatography (Appendix VI D).

Chromatographic system and system suitability Use a column packed with octadecylsilane bonded silica gel as the stationary phase and the mixture of methanol and 1% of glacial acetic acid solution (50 : 50) as mobile phase. As detector a spectrophotometer set at 285 nm. The number of the theoretical plate of the column is not less than 7000, calculated with reference to the peak of cinnamic acid.

Reference solution Dissolve cinnamic acid CRS, accurately weighed, in methanol to produce a solution containing 8 μg of cinnamic acid per ml, and mix well.

Test solution To 0.5 g of the powder, accurately weighed, add 10 ml of 0.5 mol/L potassium hydroxide in ethanol, heat under reflux on a water bath for 1 hour. Cool, and evaporate ethanol, to the residue add 20 ml of hot water, mix well, cool, add 30 ml of water and 20 ml of magnesium sulfate solution (1.5 → 50), mix well, stand for 10 minutes, filter, wash the residue with 20 ml of water for several times. Combine the filtrate and washing, add hydrochloric acid to acidification by shaking, extract with 4 quantities, each of 40 ml of ether. Combine the filtrate, evaporate the ether at low temperature. Dissolve the residue in methanol and transfer into 100 ml volumetric flask, add with methanol to volume. Accurately measure 1 ml of the solution to a 50 ml volumetric flask, add methanol to volume, mix well. Filter and use the successive filtrate as the test solution.

Procedure Inject accurately 10 μl of the reference solution and of the test solution respectively into the column, and calculate the contents.

It contains not less than 5.0 per cent of cinnamic acid ($C_9H_8O_2$), calculated with reference to the dried drug.

Action To induce resuscitation, expel evil factors, and relieve pain.

Indications Stroke, sudden loss of consciousness; epilepsy and convulsion; pain with cold sensation in the chest or abdomen.

Usage and dosage 0.3-1 g, used in pills or powder, but not decoction.

Storage Preserve in well closed containers, stored in a cool and dry place.

Sulfur
(硫黄, Liuhuang)

Sulfur

Sulfur is the natural sulfur of natural elemental mineral group. The drug is collected and melted to remove foreign matter; or obtained by processing

the minerals containing sulfur.

Description In irregular masses, yellow or somewhat greenish-yellow. Surface uneven, showing fatty lustre, often with numerous small holes. Slightly bursting sound being heard on holding the drug tightly near the ear. Texture light and fragile, easily broken, fracture often showing needle crystals. Odour, characteristically stinking; taste, weak.

Identification Melts easily on burning, with a blue flame and an irritant odour of sulfur dioxide.

Assay To about 0.2 g of the fine powder, accurately weighed, in a conical flask, add 50 ml of ethanolic potassium hydroxide (0.5 mol/L) VS, accurately measured, and 10 ml of water, heat on a water bath to dissolve and evaporate the ethanol until no bubble and no odour of ethanol are produced in the solution. Add 40 ml of water, place a small funnel on the mouth of the flask, boil gently for 10 minutes, allow to cool, add dropwise carefully 5 ml of hydrogen peroxide TS, mix well, heat on a boiling water bath for 10 minutes, cool to room temperature, wash the funnel and the inner wall of the flask with water, add 2 drops of methyl orange IS, and titrate with hydrochloric acid (0.5 mol/L) VS. Perform a blank determination and make any necessary correction. Each ml of ethanolic potassium hydroxide (0.5 mol/L) VS is equivalent to 8.015 mg of sulfur (S).
It contains not less than 98.5 per cent of sulfur (S).

Processing *Sulfur* Eliminate foreign matter, and break to pieces.

Sulfur (processed) Boil the clean sulfur with bean curd until the bean curd shows blackish-green, take out, wash clean, and dry in the shade.
Using 200 kg of bean curd per 100 kg of sulfur.

Action To counteract poison, kill parasites and cure sores when used externally; to reinforce *yang* and relax the bowels when taken orally.

Indications External use for scabies, favus, abscesses due to cold and phlegm retention and malignant ulcers; oral administration for impotence with cold lower extremities; asthma or constipation of *deficiency-cold* type.

Usage and dosage For external use, appropriate quantity is applied topically after ground into powder and mixed with oil; for oral administration, 1.5-3 g, used in pills or powder after processed.

Precaution Use with caution in pregnancy.

Storage Preserve in a dry place, protected from fire.

Syngnathus
(海龙, Hailong)

Pipefish

Pipefish is the dried body of *Solenognathus hardwickii* (Gray), *Syngnathoides biaculeatus* (Bloch) or *Syngnathus acus* Linnaeus (Fam. Syngnathidae). The drug is collected in summer or autumn. For *Solenognathus hardwickii* and *Syngnathoides biaculeatus*, removed from the skin and viscera, washed clean, and dried in the sun. For *Syngnathus acus*, washed clean, and dried in the sun.

Description *Body of Solenognathus hardwickii* Narrow, long and laterally flattened, 30-50 cm long. Externally yellowish-white or greyish-brown. Head possessing a long tubular snout, mouth small, toothless, eyes rounded and deeply sunken. The axis of the head forming somewhat an obtuse angle with axis of the body. Trunk 3 cm wide, five-ridged, the anterior part of the tail six-ridged, the posterior part tapered off, four-ridged, and coiled at the end. Both sides of the dorsal ridge each bearing a longitudinal stripe consisted of greying-black spots. Whole body covered with striated bony rings and fine transverse streaks, projected granular spines occuring in each bony ring. The pectoral fin short and wide, dorsal fin long, sometimes indistinct, caudal fin lacking. Texture bony, hard. Odour, slightly stinking; taste, slightly salty.

Body of Syngnathoides biaculeatus Long and flattened, 20-22 cm long. The trunk somewhat four-ridged, externally greyish-yellow, the axises of the head and the body usually in the same straight line.

Body of Syngnathus acus Long and narrow, whip-shaped, 10-30 cm long, the skin not removed, externally yellowish-brown. Breeding pouch visible in some samples, caudal fin present. Texture fragile, easily torn.

Processing Eliminate dust and scraps. Break to pieces or cut into sections before use.

Action To warm the kidney and reinforce *kidney esseme*, reduce nodulation, and induce subsidence of swelling.

Indications Impotence and seminal emission; mass in the abdomen; scrofula; traumatic injuries; external use for carbuncles and boils.

Usage and dosage 3-9 g; for external use, appropriate quantity is ground into powder and applied topically.

Storage Preserve in a cool and dry place, protected from moth.

Talcum
(滑石, Huashi)

Talc

Talc is a mineral of silicates of talcum group, containing mainly hydrated magnesium silicate [$Mg_3(Si_4O_{10})(OH)_2$]. The drug is collected, and removed from foreign matter.

Description Aggregates of masses, irregular, white, yellowish-white or pale bluish-grey, with waxy lustre. Texture soft, smooth and unctuous on touching. Nonhygroscopic, non-disintegrated in water. Odour, slight; and tasteless.

Identification (1) To 0.2 g of the powder in a platinum crucible, add an equal quantity of calcium fluoride or sodium fluoride powder, stir, add 5 ml of sulfuric acid, heat gently, cover immediately the platinum crucible with a cover hanging with a drop of water, after a moment, take the cover off, the white turbidity is produced in the water drop. (2) To 0.5 g of the powder in a beaker, add 10 ml of hydrochloric acid (4→10), cover with a watch glass, boil gently with occasional shaking for 40 minutes, filter through rapid filter paper, wash the residue with water for four or five times. To about 0.1 g of the residue in a platinum crucible, add 10 drops of sulfuric acid (1→2) and 5 ml of hydrofluoric acid, heat until a white fume of sulfur trioxide is produced. Allow to cool, and dissolve in 10 ml of water. To 2 drops of the solution add 1 drop of magnesium reagent [dissolve 0.01 g of (*p*-nitro-azo)-resorcinol in 1000 ml of 4% sodium hydroxide solution], and add dropwise sodium hydroxide solution (4→10) to make alkaline; a blue precipitate is produced.

Processing Eliminate foreign matter, wash clean, break to pieces, pulverize to fine powder, or carry out the method for levigating (Appendix Ⅱ D), levigate the drug to fine powder, and dry in the shade.

Action To relieve dysuria, eliminate *summer-heat* and *damp*, and arrest discharges and promote healing of sores.

Indications Urinary infection, urolithiasis with difficult urination accompanied with burning pain; fidget and thirst caused by *summer-damp*, diarrhea caused by *damp-heat*; external use for eczema, sores with exudation, miliaria.

Usage and dosage 10-20 g; appropriate quantity for external use.

Storage Preserve in a dry place.

Thallus Laminariae Thallus Eckloniae
(昆布, Kunbu)

Kelp or Tangle

Kelp or Tangle is the dried thalline of *Laminaria japonica* Aresch. (Fam. Laminariaceae) or Ecklonia kurome Okam. (Fam. Alariaceae). The drug is collected in summer and autumn, and dried in the sun.

Description *Thallus Laminariae* Rolled and folded into a mass, or winded up into a bundle. Blackish-brown or greenish-brown throughout, externally showing white frost-like powder. After soaking in water, swollen into a flattened long strap, 50-150 cm long, 10-40 cm wide, relatively thick in central part, thinner and undulate on edges. Slightly coriaceous, remains of stipe compressed-cylindrical. Odour, seaweed-like; taste, salty.

Thallus Eckloniae Rolled and crumpled into an irregular ball. Black throughout, relatively thin. After soaking in water, swollen into a flattened phylloid, 16-26 cm long and wide, about 1.6 mm thick; two sides pinnatipartite, lobes long-ligulate, margins serrulate or entire. Texture soft and smooth.

Identification (1) Thick, swollen on soaking in water, surface smooth and viscous with transparent mucilage. When twisted by fingers, Thallus Laminariae can not be laminated, and Thallus Eckloniae laminated.
(2) Macerate about 10 g of the small pieces in 200 ml of water for several hours, filter and concentrate the filtrate to about 100 ml. To 2-3 ml of the concentrated solution add 1 drop of nitric acid and several drops of silver nitrate TS, a yellow colloidal precipitate is produced, which is slightly soluble in ammonia TS, but insoluble in nitric acid.

Assay Weigh accurately 10 g of the small pieces to a crucible, ignite gently and keep for 10 minutes whenever the temperature is raised for 100℃ and keep for 40 minutes at 400-500℃. Allow to cool and place the residue in a beaker. Add 100 ml of water, boil for about 5 minutes and filter. Treat the residue with further 2 quantitie of 100 ml of water, filter, combine the filtrates, wash the residue with 3 quantities of hot water, combine the washings and the filtrate, and concentrate to about 80 ml. Allow to cool, transfer to a 100 ml volumetric flask and dilute with water to volume. Transfer accurately 5 ml to a glass stoppered flask, add 50 ml of water and 2 drops of methyl red IS, add dropwise dilute sulfuric acid solution until a red colour is produced. Add 5 ml of freshly prepared bromine TS, heat to boil, add 5 ml of 20% sodium formate solution along the flask wall, and heat for 10-15 minutes again. Wash the flask wall with hot water, cool, add 5 ml of dilute sulfuric acid solution and 5 ml of 15% solution of potassium iodide, titrate immediately with sodium thiosulfate (0.01 mol/L) VS to pale yellow, add 1 ml of starch IS, and continue to titrate until the blue colour disappears. Each ml of sodium thiosulfate (0.01 mol/L) VS is equivalent to 0.2115 mg of I.
Thallus Laminariae contains not less than 0.35 per cent of I; Thallus Eckloniae contains not less than 0.20 per cent of I, calculated with reference to the dried drug.

Processing Eliminate foreign matter, rinse, briefly dry in the air, cut into wide slivers, and dry in the sun.

Action To eliminate phlegm, soften hard masses and dissolve lumps, and cause diuresis.

Indications Goiter, scrofula, swelling and pain of the testes; edema.

Usage and dosage 6-12 g.

Storage Preserve in a dry place.

Venenum Bufonis
(蟾酥, Chansu)

Toad Venom

Toad Venom is the dried secretion of *Bufo bufo gargarizans* Cantor or *Bufo melanostictus* Schneider (Fam. Bufonidae). Usually the toad is collected in summer or autumn, washed clean. The white serous fliud of the parotid glands and skin glands is squeezed out, processed, and dried.

Description In flattened and rounded masses or slices, brown or reddish-brown. Texture of the mass hard, uneasily broken, fracture brown, cuticuloid, slightly lustrous. Texture of the slice fragile, easily broken, fracture reddish-brown, translucent. Odour, slightly stinking; taste sweet at first, persistently tingling and pungent latter. Sneeze on smelling the powder.

Identification (1) A creamy white bump is produced on the fracture on touching with water.
(2) Macerate 0.1 g of the powder in 5 ml of methanol for 1 hour, filter. To the filtrate add a small quantity of *p*-dimethylaminobenzaldehyde and several drops of sulfuric acid, a bluish-violet colour is produced.
(3) Macerate 0.1 g of the powder in 5 ml of chloroform for 1 hour, filter, evaporate the filtrate to dryness. Dissolve the residue in a small quantity of acetic anhydride, add sulfuric acid dropwise, a bluish-violet colour is produced, which turns gradually to bluish-green.
(4) Heat under reflux 0.2 g of the powder with 10 ml of ethanol for 30 minutes, filter, transfer the filtrate to a 10 ml volumetric flask and add ethanol to volume as the test solution. Prepare a solution of 0.2 g of Venenum Bufonis reference drug in the same manner as the reference drug solution. Dissolve resibufogenin CRS and cinobufagin CRS in ethanol separately to produce solutions each containing 1 mg per ml as the reference solutions. Carry out the method for thin layer chromatography (Appendix Ⅵ B), using silica gel G as the coating substance and a mixture of cyclohexane, chloroform and acetone (4 : 3 : 3) as the mobile phase. Apply separately to the plate 10 μl of each of the above four solutions. After developing and removal of the plate, dry in air, spray with 10% solution of sulfuric acid in enthanol, heat to spots clear. The spots in the chromatogram obtained with the test solution correspond in position and colour to the spots in the chromatogram obtained with the reference drug solution, one green and one red spots are shown in the chromatogram of the test solution, corresponding in position with the reference solutions.

Total ash Not more than 5.0 per cent (Appendix Ⅸ K).

Acid-insoluble ash Not more than 2.0 per cent (Appendix Ⅸ K).

Assay Carry out the method for high performance liquid chromatography (Appendix Ⅵ B).

Chromatographic system and system suitability Use octadecylsilane bonded silica gel as the stationary phase and a mixture of 0.5% potassium dihydrogen phosphate and acetonitrile (50 : 50) (adjust to pH 3.2 with phosphoric acid) as the mobile phase. As detector a spectrophotometer set at 296 nm. The temperature of the column is 40℃. The numbers of theoretical plates of the column are not less than 4000, calculated with references to the peaks of cinobufagin and resibufogenin, respectively.

Reference solution Weigh accurately 10 mg of each of cinobufagin CRS and resibufogenin CRS respectively, previously dried over phosphorous pentoxide in vacuum for 24 hours, to 100 ml volumetric flasks, dissolve separately in methanol and dilute to volumes and mix well. Measure accurately 5 ml of each of the two solutions to 10 ml volumetric flasks and dilute to volumes, respectively, and mix well (each containing 50 μg per ml).

Test solution Weigh accurately 25 mg of the fine powder into a stopper conical flask, add accurately 20 ml of methanol and weigh. Heat under reflux for 1 hour, allow to stand to cool, weigh again, replenish the loss of the solvent with methanol and mix well. Filter and use the successive filtrate as the test solution.

Procedures Accurately inject 20 μl of each of the above two reference solutions and the test solution into the column, and calculate the content.
It contains not less than 6.0 per cent of the sum of cinobufagin ($C_{26}H_{34}O_6$) and resibufogenin ($C_{24}H_{32}O_4$), calculated with reference to the dried drug.

Processing *Venenum Bufonis* (*powdered*) Break Venenum Bufonis to pieces, macerate with white rice wine, frequently stir untile become concentrated extract, dry and pulverize. To each 10 kg of Venenum Bufonis add 20 kg of white rice wine.

Action To counteract *toxicity*, relieve pain, and restore consciousness.

Indications Carbuncles, boils, sore throat; vomiting, diarrhea, abdominal pain and impaired consciousness in heat-stroke.

Usage and dosage 0.015-0.03 g, mostly used in pills or powder; appropriate quantity for external use.

Precaution Used with caution in pregnancy.

Storage Preserve in a dry place, protected from moisture.

Zaocys
(乌梢蛇, Wushaoshe)

Black-tail Snake

Black-tail Snake is the dried body of *Zaocys dhumnades* (Cantor) (Fam. Colubridae). The drug is collected in summer or autumn, opened in the abdomen or opened after the skin is stripped except the head and tail, removed from the viscera, coiled up in disc-shape and dried.

Description Disc-shaped, about 16 cm in diameter. The surface blackish-brown or greenish-black, densely covered with rhombic scales. The rows of dorsal scale in even number, the central 2-4 rows scales strongly keeled, forming two black strips throughout the whole body longitudinally. Head in the centre of the disc, flattened rounded. Eyes large, mostly lustrous and not sunk, 8 upper labials, the 4 th and 5 th entering orbit, 1 loreal, 1 small preocular and 2 postoculars. The median dorsal portion towering like a roof ridge. The edges of the cut abdomen rolled inward; dorsal musculature thick, yellowish-white or pale brown, ribs neatly arranged. The tail long and gradually tapering, with 2 rows of subcaudals. The stripped black snake, only with skin and scales of the head and tail, the middle portion relatively smooth. Odour stinking; taste weak.

Extractives Carry out the hot extraction method for determination of ethanol-soluble extractives (Appendix Ⅹ A), using dilute ethanol TS as the solvent, not less than 12.0 per cent.

Processing *Zaocys* Eliminate the head and scales and cut into sections of about 3 cm long.

Zaocys Flesh After eliminating the head and scales, soften thoroughly with yellow rice wine, eliminate skin and bones, and dry.

Zaocys (*processed with wine*) Stir-bake the clean sections of Zaocys with yellow rice wine as described under the method for stir-baking with wine (Appendix Ⅱ D) to dryness, using 20 kg of yellow rice wine per 100 kg of Zaocys.

Action To dispel *wind*, remove obstruction from the collaterals, and relieve spasm and convulsion.

Indications Chronic rheumatiod arthritis with numbness and ankylosis; hemiplegia in stroke; convulsion, tetanus, leprosy, scabies, scrofula with suppuration.

Usage and dosage 9-12 g.

Storage Preserve in a dry place, protected from mould and moth.

MONOGRAPHS
PART II

Oil, Fats and Extractives

Bergeninum
(岩白菜素，Yanbaicaisu)

Bergenin

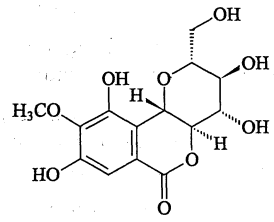

$C_{14}H_{16}O_9$ 328. 27

Description White, loosen needle crystals or crystalline powder. Odourless; taste, bitter; gradually discolours on exposure to light and heat.
Soluble in methanol; slightly soluble in water or ethanol.

Melting range 232-240℃, dried previously at 130℃ (Appendix Ⅵ C).

Specific optical rotation −38° to −45°, in a solution of 20 mg per ml in methanol, calculated on the dried basis (Appendix Ⅶ E).

Identification (1) Heat to dissolve about 50 mg in 10 ml of water and cool. To 1 ml of the solution add 2 drops of potassium ferricyanide TS containing 1 drop of ferric chloride TS per ml; an emerald green colour is produced and changes to blue colour.
(2) Dissolve 5 mg in 1 ml of methanol, add several drops of 7% hydroxyamine hydrochloride solution in methanol, adjust alkaline with 10% solution of potassium hydroxide in methanol, heat to boil gently. Allow to cool, acidify with dilute hydrochloric acid, add 1-2 drops of 1% ferric chloride solution in ethanol, a purplish-red colour is produced.
(3) The light absorption of the solution obtained in Assay, exhibits maxima at 275 nm and 220 nm (Appendix Ⅴ A).

Loss on drying When dried to constant weight at 130℃, loses not more than 6.0 per cent (Appendix Ⅸ G).

Residue on ignition Not more than 0.1 per cent (Appendix Ⅸ J).

Assay Place about 20 mg, accurately weighed, in a 50 ml volumetric flask, add methanol to volume, mix well. Measure accurately 1 ml of the solution to a 25 ml volumetric flask, add methanol to volume, mix well. Carry out the method for ultraviolet spectrophotometry and colourimetry (Appendix Ⅴ A), measure the absorbance at 275 nm, calculate the content of $C_{14}H_{16}O_9$, taking 248 as the value of $A^{1\%}_{1\,cm}$.
It contains not less than 97.0 per cent and not more than 103.0 per cent of bergenin ($C_{14}H_{16}O_9$), calculated with reference to the dried drug.

Action To relieve cough and eliminate phlegm.

Indications Chronic bronchitis.

Usage and dosage 0.125 g, 3 times a day.

Storage Preserve in tightly closed containers, protected from light.

Cyclovirobuxinum D
(环维黄杨星 D，Huanweihuangyangxing D)

Cyclovirobuxine D

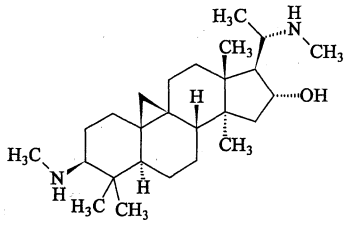

$C_{26}H_{46}N_2O$ 402. 36

Cyclovirobuxine D is the substance extracted from *Buxus microphylla* Sieb. et Zucc. *var sinica* Rehd. et Wils. or other plants of the same genus.

Description A colourless and needle crystals; odourless; taste, bitter.
Freely soluble in chloroform; soluble in methanol or ethanol; sparingly soluble in acetone; slightly soluble in water.
Melting point, 219-222℃, with decomposition (Appendix Ⅵ C).

Identification (1) Dissolve 5 mg in 1 ml of glacial acetic acid solution (1 → 20), add 1-2 drops of potassium iodobismuthate TS, and reddish-brown precipitate is produced.
(2) To 5 mg of the powder add 1 ml of ethanol and 2 ml of sulphuric acid, orange red colour is produced.

Other alkaloids Dissolve the powder with chloroform to prepare 1 mg of Cyclovirobuxinum D per ml. Carry out the method for thin layer chromatography (Appendix Ⅵ B), using silica gel G as the coating substance and a mixture of chloroform, acetone and diethylamine (5 : 4 : 0.4) as the mobile phase. Apply separately 10 μl of the above solutions to the plate. After developing and removal of the plate, dry in air. Spray with a solution of dilute potassium iodobismuthate TS, no other spot except for the main spot.

Loss on drying Constant at 105℃, lose not more than 0.5 per cent (Appendix Ⅸ G).

Assay Dissolve 0.15 g, accurately weighted, in 30 ml of glacial acetic acid, add 1 ml of acetic anhydride and 1-2 drops of crystal violet IS, titrate with perchloric acid VS (0.1 mol/L) until the colour changes to blue. Perform a black determination. Each ml of perchloric acid TS (0.1 mol/L) is equivalent to 20.12 mg of Cyclovirobuxinum D ($C_{26}H_{46}N_2O$).
It contains not less than 99.0 per cent of Cyclovirobuxinum D ($C_{26}H_{46}N_2O$) with reference to the dried drug.

Action To promote the flow of *qi* and active blood circulation, remove obstruction from the collaterals and alleviate pain.

Indications Chest impediment with heartache, knotted and inter mittent pulse. due to stagnation of *qi* and blood stasis; coronary heart disease and cardiac arrhythmia marked by above symptoms.

Usage and dosage 1-2 mg, 2-3 times a day.

Storage Preserve in tightly closed containers, protect from light.

Preparation Cyclovirobuxine D Tablets

Extractum Acanthopanacis Senticosi (刺五加浸膏, Ciwujia Jingao)

Manyprickle Acanthopanax Extract

Manyprickle Acanthopanax Extract is prepared from Radix Acanthopanacis Senticosi. The water extract is obtained by extracting with water and the ethanol extract is obtained by extracting with ethanol.

Procedure Pulverize 1000 g of Radix Acanthopanacis Senticosi to coarse powder, decoct with water 2 times, 3 hours each. Combine the decoctions, filter, and concentrate the filtrate to 50 g of extract; or heat under reflux with 75% ethanol for 12 hours, filter, recover ethanol from the filtrate, and concentrate to 40 g of extract.

Description A blackish-brown thick extract; odour, aromatic; taste, slightly bitter and astringent.

Identification Dissolve 1 g in 20 ml of methanol, filter, evaporate the filtrate to dryness, and dissolve the residue in 1 ml of methanol as the test solution. To 5 g of *Radix Acanthopanacis Senticosi* reference drug, add 20 ml of methanol, ultrasonicate for 30 minutes, filter, evaporate the filtrate do dryness, and dissolve the residue in 1 ml of methanol as the reference drug solution. Dissolve a quantity of isofraxidin CRS in methanol to prepare a solution containing 1 mg per ml as the reference solution. Carry out the method for thin layer chromatography (Appendix Ⅵ B), using silica gel G as the coating substance and a mixture of chloroform, methanol and water (8 : 1 : 0.1) as the mobile phase. Apply separately 5 μl of each of the test solution and the reference drug solution, 1 μl of the reference solution to the plate. After developing and removal of the plate, dry in air, examine under ultraviolet light at 365 nm. The fluorescent spots in the chromatogram obtained with the test solution correspond in position and colour to the spots in the chromatogram obtained with the reference drug solution and the reference solution.

Water Carry out the method for loss on drying (Appendix Ⅸ H, method 1).
Water extract: Not more than 30.0 per cent. Ethanol extract: Not more than 20.0 per cent.

Total ash Not more than 6.0 per cent (Appendix Ⅸ K).

Other requirements Complies with the general requirements for liquid extracts and extracts (Appendix Ⅰ O).

Extractives Carry out the hot extraction method for determination of water soluble extractives (Appendix Ⅹ A). Water extract: Not less than 45.0 per cent. Carry out the hot extraction method for determination of ethanol soluble extractives (Appendix Ⅹ A). Use methanol as solvent, ethanol extract: Not less than 60.0 per cent.

Assay Carry out the method for high performance liquid chromatography (Appendix Ⅵ D).

Chromatographic system and system suitability Use octadecylsilane bonded silica gel as the stationary phase and a mixture of methanol and water (20 : 80) as the mobile phase. As detector a spectrophotometer set at 265 nm. The number of theoretical plates for the column is not less than 2000, calculated with the reference to the peak of syringoside.

Reference solution Dissolve a quantity of syringoside CRS in methanol to prepare a solution containing 80 μg per ml.

Test solution Weigh accurately 0.2 g in a 25 ml volumetric flask, dissolve in methanol and add to volume, shake well and filter. Use the successive filtrate as the test solution.

Procedure Inject accurately 10 μl of each of the reference solution and the test solution into column, respectively, calculate the content.
It contains not less than 0.50 per cent of syringoside ($C_{17}H_{24}O_9$), calculated with reference to the dried drug.

Action To replenish qi and invigorate the spleen, and nourish the kidney and anchor the mind.

Indications Lassitude, anorexia, aching pain in the lower back and knees, insomnia and dreamfulness due to *yang-deficiency* in the spleen and kidney.

Usage and dosage 0.3-0.45 g, 3 times a day.

Storage Preserve in tightly closed containers.

Preparation Manyprickle Acanthopanax Tablets

Extractum Angelicae Liquidum (当归流浸膏, Danggui Liujingao)

Chinese Angelical Liquid Extract

Chinese Angelica Liquid Extract is prepared from Radix Angelicae Sinensis.

Procedure Carry out the method for percolation described under liquid extracts and extracts (Appendix Ⅰ O). Macerate 1000 g of the coarse powder of Radix Angelicae in 70% ethanol for 48 hours, percolate slowly. Collect 850 ml of the initial percolate in a separate container, and continue the percolation until the percolate becomes colourless or slightly yellow. Concentrate the successive percolate below 60℃ to a thick extract, mix well with the initial percolate, dilute with 70% ethanol to produce 1000 ml. Allow to stand for several days and filter.

Description A dark brown liquid; odour, characteristic; taste, slightly sweet, then bitter and numb.

Ethanol content Not less than 45 per cent and not more than 50 per cent (Appendix Ⅸ M).

Total solid Place 10 ml, measured accurately, in a tared evaporating dish, dried previously to constant weight, evaporate to dryness on a water bath. Dry the residue at 100℃ for 3 hours, transfer to a desiccator and cool for 30 minutes, weigh accurately, the residue is not less than 3.6 g.

Other requirements Complies with the general requirements for liquid extracts and extracts (Appendix Ⅰ O).

Action To nourish blood to regulate menstrual flow.

Indications Irregular menstruation and dysmenorrhea due to a deficiency and stagnation of blood.

Usage and dosage 3-5 ml; 9-15 ml a day.

Storage Preserve in tightly closed containers, stored in a cool place.

Extractum Belladonnae (颠茄浸膏, Dianqie Jingao)

Belladonna Extract

Belladonna Extract is an extract prepared from

Herba Belladonnae.

Procedure Carry out the method of percolation as described under Liquid Extracts and Extracts (Appendix I O), macerate 1000 g of Belladonna Herb (coarse powder) with 85% ethanol for 48 hours, then percolate slowly at a speed of 1-3 ml per minute. Collect about 3000 ml of the initial percolate in a container. Continue the percolation, until alkaloids is percolated thoroughly, and the successive percolate is used as the solvent for the next percolation. Recover ethanol from the initial percolate at 60℃ in vacuum, allow to cool to room temperature, and separate chlorophyll, filter and evaporate the filtrate to a concentrated extract at 60-70℃. Add 10 volumes of ethanol of the extract, stir well and allow to stand to precipitate thoroughly. Separate the supernatant solution, recover ethanol at 60℃ in vacuum, then concentrate to a concentrated extract. Carry out the Assay described under the determination of the content of alkaloids, using 3 g of the concentrated extract. Add a quantity of diluent to adjust the content of alkaloids complying with the requirement, dry at a low temperature, pulverize to fine powder, and sift through a No. 4 sieve.

Description A greyish green powder.

Identification Take a quantity of the solution after being titrated under Assay, add ammonia TS to make the solution alkaline, extract with a quantity of chloroform and evaporate chloroform extract to dryness, the residue produce the characteristic reactions of tropane alkaloids (Appendix Ⅳ).

Other requirements Comply with the general requirements for liquid extracts and extracts (Appendix I O).

Assay Transfer about 3 g, accurately weighed, to a separating funnel with 12 ml of dilute ethanol, shake frequently for 30 minutes, add 2 ml of ammonia TS, extract rapidly with at least six 25-ml quantities of chloroform, until completely extracting of the alkaloids. Combine the chloroform extracts, extract with sulfuric acid (0.1 mol/L) and ethanol (3 : 1), until completely extracting of the alkaloids. Combine the acid solutions and conduct the Assay as described under Belladonna Herb, beginning at the words "extract the solution with portions of 10-ml quantities of chloroform". Each ml of sulfuric acid (0.01 mol/L) VS is equivalent to 5.788 mg of hyoscyamine ($C_{17}H_{23}NO_3$).
It contains not less than 0.95 per cent and not more than 1.05 per cent of alkaloids, calculated as hyoscyamine ($C_{17}H_{23}NO_3$).

Action Anticholinergic, to relieve spasm of smooth muscles, and inhibit secretion of glands.

Indications Gastric and duodenal ulcer, colicky pain in the gastrointestinal tract, kidney, gallbladder and so on.

Usage and dosage Usual dose: 10-30 mg; 30-90 mg a day. Maximum dose: 50 mg; 150 mg a day.

Precaution Contraindicated in patients with glaucoma.

Storage Preserve in tightly closed containers, stored in a cool place.

Preparation Belladonna Tablets

Extractum Belladonnae Liquidum (颠茄流浸膏, Dianqie Liujingao)

Belladonna Liquid Extract

Belladonna Liquid Extract is an extract prepared from Herba Belladonnae.

Procedure Take 1000 g coarse powder of Herba Belladonnae. Carry out the procedure described under Belladonna Extracts to prepare concentrated extract. Determine the content of alkaloids, then add a quantity of 85% ethanol and dilute with water to adjust the content of alkaloids and alchohol complying with the requirements, allow to stand for clarification and filter.

Description A brown liquid; odour, slightly stinking.

Identification (1) Take a quantity of the solution after being titrated under Assay, add ammonia TS to make the solution alkaline, extract with a quantity of chloroform, evaporate the chloroform extract to dryness, the residue produce the characteristic reactions of tropane alkaloids (Appendix Ⅳ).
(2) To 1 ml, add 5 ml each of water and strong ammonia TS, extract with three 10-ml quantities of ether, combine the ether solutions, and evaporate to dryness. Dissolve the residue in 1 ml of chloroform, and use it as the test solution. Dissolve atropine sulfate CRS in methanol to produce a solution containing 2 mg per ml as the reference solution. Carry out the method for thin layer chromatography (Appendix Ⅵ B), using silica gel G as the coating substance and a mixture of ethyl acetate, methanol and concentrated ammonia TS (17 : 2 : 1) as the mobile phase. Apply separately 1 μl of the test solution and 5 μl of the reference solution to the plate. After developing and removal of the plate, dry in air, and spray with dilute potassium iodobismuthate TS. The spot in the chromatogram obtained with the test solution corresponds in colour and position to the spot in the chromatogram obtained with the reference solution.

Ethanol content Not less than 52 per cent and not more than 66 per cent (Appendix Ⅸ M).

Other requirements Complies with the general requirements for liquid extracts and extracts (Appendix I O).

Assay Place 10 ml, measured accurately, in a separating funnle, add 10 ml each of water and sulfuric acid solution (0.1 mol/L), extract with portions of 10-ml quantities of chloroform, until chloroform layer is colourless. Combine the chloroform solutions, wash with 10 ml of sulfuric acid solution (0.1 mol/L), combine the washings with acid solution and conduct the Assay as described under Belladonna Herb, beginning at the words "make the solution alkaline by adding excess of strong ammonia TS". Each ml of sulfuric acid (0.01 mol/L) VS is equivalent to 5.788 mg of hyoscyamine ($C_{17}H_{23}NO_3$).
It contains not less than 0.70 per cent and not more than 0.80 per cent of alkaloids (g/ml), calculated as hyoscyamine ($C_{17}H_{23}NO_3$).

Action Anticholinergic, to relieve spasm of smooth muscles, and inhibit secretion of glands.

Indications Gastric and duodenal ulcer, colicky pain in the gastrointestinal tract, kidney, gallbladder and so on.

Usage and dosage Usual dose: 0.01-0.03 ml; 0.03-0.1 ml a day. Maximum dose: 0.06 ml; 0.2 ml a day.

Precaution Contraindicated in patients with glaucoma.

Storage Preserve in tightly closed containers, stored in a cool place.

Extractum Folium Ginkgo Siccus (银杏叶提取物，Yinxingye Tiquwu)

Ginkgo Biloba leaf Extract

Ginkgo biloba extract is the extract prepared from Ginkgo leaf.

Procedure Pulverize Ginkgo leaf to powder, extract with diluted ethanol under reflux, combine the extracts, recover ethanol and concentrate to a quantity. Apply it to a previously prepared column of macroporous resin, elute stepwise with water and ethanol of different concentrations. Collect the ethanolic eluates, recover ethanol, spray to dryness; or concentrate to a thick extract, dry in vacuum and pulverize.

Description Pale brownish-yellow or blackish-brown powder; taste, slightly bitter.

Identification (1) Macerate 0.2 g in 15 ml of n-butanol on a warm water bath for 15 minutes, shake frequently, cool, filter, and evaporate the filtrate to dryness. Dissolve the residue in 20 ml of ethanol as the test solution. Prepare a solution with 0.2 g of ginkgo leaf reference extract in the same manner as the reference extract solution. Carry out the method for thin layer chromatography (Appendix Ⅵ B), using silica gel G mixed with sodium carboxymethylcellulose prepared with 4% sodium acetate as the coating substance and a mixture of ethyl acetate, butanone, methanol and water (5∶3∶1∶1) as the mobile phase. Apply separately 3 μl of each of the test solution and the reference extract solution to the plate. After developing and removal of the plate, dry in air, and spray with a 3% solution of aluminum chloride in ethanol. Examine under ultraviolet light at 365 nm. The fluorescent spots in the chromatogram obtained with the test solution correspond in position and colour to the spots in chromatogram obtained with the reference extract solution.

(2) Carry out the method for thin layer chromatography (Appendix Ⅵ B), using silica gel G mixed with sodium carboxymethylcellulose prepared with 4% sodium acetate as the coating substance and a mixture of toluene, ethyl acetate, acetone and methanol (10∶5∶5∶0.6) as the mobile phase. Apply separately 15 μl of each of the test solution and the reference solution of terpene lactones, obtained under Assay, to the plate. After developing and removal of the plate, dry in air, expose to acetic anhydride vapour for 15 minutes, heat at 140-160℃ for about 30 minutes, cool, and examine under ultraviolet light at 365 nm. The fluorescent spots in the chromatogram obtained with the test solution correspond in position and colour to the spots in chromatogram obtained with the reference solution.

Water Not more than 5.0 per cent. (Appendix Ⅸ H, method 1)

Residue on ignition Not more than 0.8 per cent (Appendix Ⅸ J).

Heavy metal Carry out the limit test for heavy metals (Appendix Ⅸ E), not more than 20 ppm, using the residue obtained under the test of residue on ignition.

Peak area ratio of flavone aglycone Calculate the peak areas from the flavonol aglycone chromatogram, obtained under Assay, the peak area ratio of quercetin to kaempferide is 0.8 to 1.5.

Total Ginkgolic acids Carry out the method for high performance liquid chromatography (Appendix Ⅵ D).

Chromatographic system and system suitability Use octadecylsilane bonded silica gel as the stationary phase and a mixture of methanol and 1% glacial acetic acid solution (90∶10) as the mobile phase. As detector a spectrophotometer set at 310 nm. The number of theoretical plates for the column is not less than 4000, calculated with the reference to the peak of ginkgoneolic acid.

Reference solution Dissolve a quantity of ginkgoneolic acid CRS, accurately weighed, in methanol to produce a solution containing 5 μg per ml as the reference solution. Dissolve a quantity of total gingko acids in methanol to produce a solution containing 100 μg per ml as the reference solution for peaks identification.

Test solution Weigh accurately 10 g in a stopper conical flask, add accurately 50 ml of petroleum ether (60-90℃) and weigh. Heat under reflux for 2 hours, cool, weigh again, replenish the loss of weight with petroleum ether (60-90℃), shake well, and filter. Measure accurately 25 ml of the successive filtrate, recover the solvent to dryness under vacuum, add accurately 2 ml of methanol, stopper well and shake well.

Procedure Inject accurately 10 μl of each of the three solutions into the column, respectively, and determine the total peak area of ginkgolic acids in the test solution, identifying the peaks with reference to the corresponding peaks of the total ginkgolic acids reference solution, and calculate the total ginkgolic acids content with reference to ginkgoneolic acid, using the reference external standard method. It contains not more than 0.001 per cent of total ginkgolic acids.

Assay ***Total flavonol glycosides*** Carry out the method for high performance liquid chromatography (Appendix Ⅵ D).

Chromatographic system and system suitability Use octadecylsilane bonded silica gel as the stationary phase and a mixture of methanol and 0.4% phosphoric acid solution (50∶50) as the mobile phase. As detector a spectrophotometer set at 360 nm. The number of theoretical plates for the column is not less than 2500, calculated with the reference to the peak of quercetin.

Reference solution Dissolve respectively a quantity of quercetin CRS, kaempferol CRS, and isorhamnetin CRS, accurately weighed, in methanol to prepare a mixture containing 30 μg, 30 μg, and 20 μg each per ml respectively as the reference solution. Or weigh accurately 35 mg of the ginkgo biloba extract, with the contents of quercetin, kaempferol and isorhamnetin labelled, carry out the method described under the test solution in the same manner to prepare the reference extract solution.

Test solution Extract 35 mg, weighed accurately, with 25 ml of a mixture of methanol and 25% hydrochloride acid solution (4∶1), under reflux on a water bath for 30 minutes. Cool immediately to room temperature, transfer to a 50 ml volumetric flask, dilute with methanol to volume, shake well, filter and use the successive filtrate as the test solution.

Procedure Inject accurately 10 μl of each of the test solution and the reference solution (or the reference extract solution) into the column, respectively, calculate the content of quercetin, kaempferol and isorhamnetin, respectively, and convert to the content of total amount of flavonol glycosides using the following equation:

The content of total amount of flavonol glycosides = (the content of quercetin + the content of kaempferol + the content of isorhamnetin) × 2.51

It contains not less than 24.0 per cent of total amount of flavonol glycosides, calculated with reference to the dried drug.

Terpene lactones Carry out the method for high performance liquid chromatography (Appendix Ⅵ D).

Chromatographic system and system suitability Use octadecylsilane bonded silica gel as the stationary phase and a mixture of n-propanol, tetrahydrofuran and water (1 : 15 : 84) as the mobile phase. Use an evaporative light scattering detector. The number of theoretical plates for the column is not less than 2500, calculated with the reference to the peak of bilobalide.

Reference solution Dissolve respectively a quantity of bilobalide CRS, ginkgolide A CRS, ginkgolide B CRS, and ginkgolide C CRS, accurately weighed, in methanol to prepare a mixture containing 2 mg, 1 mg, 1 mg, and 1 mg each per ml as the reference solution. Or weigh accurately 0.15 g of the ginkgo biloba reference extract, with the contents of bilobalide, ginkgolide A, ginkgolide B, and ginkgolide C labelled, carry out the method described under the test solution in the same manner to prepare the reference extract solution.

Test solution Disintegrate 0.15 g, weighed accurately, in 10 ml of water, on a water bath, add 2 drops of 2% hydrochloride acid solution, extract by shaking with one 15-ml and three 10-ml quantities of ethyl acetate, combine the ethyl acetate extracts and wash with 20 ml of 5% sodium acetate solution. Separate the sodium acetate layer, wash again with 10 ml of ethyl acetate. Combine the ethyl acetate extracts and ethyl acetate washings, wash with two 20-ml quantities of water, separate the water layer, and wash with 10 ml ethyl acetate. Combine all the ethyl acetate liquids, and recover the solvent to dryness. Dissolve the residue in methanol, transfer to a 5 ml volumetric flask, add methanol to volume, and shake well.

Procedure Inject accurately 5 μl, 10 μl of the reference solution (or the reference extract solution) and 5-10 μl of the test solution into the column, respectively, calculate the content, using a calibration equation of logarithmic alteration of two external standards.

It contains not less than 6.0 per cent of the total amount of bilobalide ($C_{15}H_{18}O_8$), ginkgolide A ($C_{20}H_{24}O_9$), ginkgolide B ($C_{20}H_{24}O_{10}$), and ginkgolide C ($C_{20}H_{24}O_{11}$), referred to total terpene lactones, calculated with reference to the dried drug.

Action To promote blood circulation to resolve stagnated blood and dredge meridians.

Indications Chest impediment, heart pain, stroke, hemiplegia and dysphasia due to blockage of meridians by stagnated blood; angina pectoris of the stable type in coronary heart disease and cerebral infarction with above symptoms.

Usage and dosage 80 mg, 240 mg a day, or follow doctor's advice.

Storage Preserve in tightly closed containers and protected from light

Preparation Ginkgo Biloba Tablets

Extractum Forsythiae Siccus (连翘提取物, Lianqiao Tiquwu)

Weeping Forsythia Extract

Weeping Forsythia Extract is prepared from Fructus Forsythiae.

Procedure Pulverize Fructus Forsythiae to coarse powder, decoct 3 times, 1.5 hours each. Combine the decoctions, filter, concentrate under 60℃ in vacuum to a thin extract with a relative density of 1.10-1.20 (at room temperature), allow to cool, add 4 volumes of ethanol, stir well, allow to stand for 2 hours and filter. Recover the ethanol, concentrate the filtrate in vacuum, and spray to dryness.

Description blackish-brown powder; odour, aromatic; taste, bitter.

Identification Ultrasonicate 0.1 g with 10 ml of methanol for 20 minutes, filter and use the filtrate as the test solution. Prepare a solution with 1 g of Fructus Forsythiae reference drug in the same manner as the reference drug solution. Carry out the method for thin layer chromatography (Appendix Ⅵ B), using silica gel G mixed with sodium carboxymethylcellulose as the coating substance and a mixture of chloroform and methanol (5 : 1) as the mobile phase. Apply separately 10 μl of each of the two solutions to the plate, after developing and removal of the plate, dry in air. Spray with a solution of 10% sulfuric acid in ethanol and heat at 105℃ to the spots clear. The spots in the chromatogram obtained with the test solution correspond in position and colour to the spots in the chromatogram obtained with the reference drug solution.

Water Not more than 5.0 per cent (Appendix Ⅸ H, method 1).

Heavy metal Carry out the limit test for heavy metals (Appendix Ⅸ E, method 2), not more than 20 ppm. Using 1 g.

Arsenic Place 5 g in crucible, cover with 1 g of magnesium oxide, add 10 ml of magnesium nitrate solution (dissolve 15 g of magnesium nitrate in 100 ml of water), macerate for 4 hours, and evaporate to dryness on a water bath. Heat gently until it is thoroughly charred, increase the temperature gradually to 500-600℃ until the incineration is complete. Cool and moisten with 5 ml of water, add 10 ml of hydrochloric acid (6 mol/L), transfer to a 50 ml volumetric flask. Rinse the crucible with three 5-ml quantities of hydrochloric acid (6 mol/L), rinse again with three 5 ml quantities of water, combine the rinsings to the same flask, add water to volume, and shake well. Measure 10 ml of the solution, add 3.5 ml rinsings to the same flask, add water to volume, and shake well. Measure 10 ml of the solution, add 3.5 ml of hydrochloric acid and 12.5 ml of water. Carry out the limit test for arsenic (Appendix Ⅸ F, method 1), not more than 2 ppm.

Assay Carry out the method for high performance liquid chromatography (Appendix Ⅵ D).

Chromatographic system and system suitability Use octadecylsilane bonded silica gel as the stationary phase and a mixture of acetonitrile and water (25 : 75) as the mobile phase. As detector a spectrophotometer set at 277 nm. The number of theoretic plates for the column is not less than 3000, calculated with the reference to the peak of forsythin.

Reference solution Dissolve a quantity of forsythin CRS, accurately weighed, in methanol to prepare a solution containing 0.2 mg per ml.

Test solution Weigh accurately 1 g to a stopper conical flask, add accurately 15 ml of methanol, and weigh. Allow to stand overnight, ultrasonicate (power, 100 W; frequency, 40 kHz) for 25 minutes, cool, weigh again, replenish the loss of weight with methanol, shake well and filter. Measure accurately 5 ml of the successive filtrate, evaporate to nearly dryness, mix well with 1.5 g of neutral aluminium oxide and then transfer to a neutral aluminium oxide column (3 g, 100-120 mesh, 1-1.5 cm in diameter). Elute with 240 ml of 70% ethanol, collect the eluates, and concentrate

to dryness. Dissolve the residue in 50% methanol in a 10 ml volumetric flask, add 50% methanol to volume, shake well and filter.

Procedure Inject accurately 10 μl of each of the reference solution and the test solution into the column, respectively, and calculate the content.
It contains not less than 0.50 per cent of forsythin ($C_{29}H_{36}O_{15}$), calculated with reference to the dried drug.

Action Clear heat and couteract *toxicity*, and reduce swelling and disperse nodes.

Indications Carbuncles, abscesses, scrofula, acute mastitis, erysipelas, common cold due to *wind-heat*, high fever, polydopsia, impaired consciousness, eruptions, stranguria due to heat, and anuresis in warm disease at its early stage or invasion of the *ying* system by heat.

Usage and Dosage According to the dosage of each formula.

Storage Preserve in tightly closed containers, stored in a ventilated and dry place.

Extractum Glycyrrhizae (甘草浸膏, Gancao Jingao)

Liquorice Extract

Liquorice Extract is prepared from Radix Glycyrrhizae.

Procedure Decoct Radix Glycyrrhizae, softened and sliced, for three times, 2 hours for each time. Combine the decoctions, allow to stand over night to deposit any precipitate and concentrate the supernatant to a thick extract. Take a quantity, carry out the determination of glycyrrhetic acid as described under Assay and adjust its content to comply with the requirement.

Description A dark brown solid; odour, slightly characteristic offensive; taste, persistent and characteristic sweet.

Identification (1) Place 1-2 mg, in fine powder, on a white porcelain plate, add several drops of sulfuric acid solution (4→5); a yellow colour is produced, which turns to orange or orange-red gradually.
(2) Dissolve 1 g in 40 ml of water, extract by shaking with three 20-ml quantities of *n*-butanol, centrifuged if necessary. Combine the *n*-butanol solutions, wash with three 20-ml quantities of water and evaporate the *n*-butanol solution to dryness. Dissolve the residue in 5 ml of methanol, used as the test solution. Dissolve ammonium glycyrrhizinate CRS in methanol to produce a solution containing 2 mg per ml as the reference solution. Carry out the method for thin layer chromatography (Appendix VI B), using silica gel G as the coating substance prepared with 1% solution of sodium hydroxide and a mixture of ethyl acetate, formic acid, glacial acetic acid and water (15 : 1 : 1 : 2) as the mobile phase. Apply separately 5 μl of each of the two solutions to the plate. After developing and removal of the plate, dry in air. Spray with a 10% solution of sulfuric acid in ethanol, heat at 105℃ to the spots clear and examine under ultraviolet light at 365 nm. An orange-yellow fluorescent spot in the chromatogram obtained with the test solution corresponds in position and colour to the spot in the chromatogram obtained with the reference solution.

Water Not more than 10.0 per cent (Appendix Ⅸ H, method 1).

Total ash Not more than 12.0 per cent (Appendix Ⅸ K).

Water-insoluble matter Dissolve 1 g, weighed accurately, in 25 ml of water on stirring and centrifuge at a speed of 1000 rpm for 1 hour (or 2000 rpm for 30 minutes). Discard the supernatant, add 25 ml of water to the precipitate, stir thoroughly, centrifuge and wash again until the washing becomes clear and colourless. Transfer the precipitate with a small quantity of water to a tared evaporating dish, evaporate to dryness on a water bath and heat to a constant weight at 105℃. The residue is not more than 5.0 per cent.

Other requirements Complies with the general requirements for liquid extracts and extracts (Appendix Ⅰ O).

Assay Carry out the method for high performance liquid chromatography (Appendix Ⅵ D).

Chromatographic system and system suitability Use octadecylsilane bonded silica gel as the stationary phase and a mixture of methanol, 0.2 mol/L ammonium acetate and glacial acetic acid (67 : 33 : 1) as the mobile phase. As detector a spectrophotometer set at 250 nm. The number of theoretical plates for the column is not less than 2000, calculated with the reference to the peak of glycyrrhizinic acid.

Reference solution Weigh accurately 10 mg of ammonium glycyrrhizinate CRS in 50 ml volumetric flask, add 45 ml of the mobile phase, ultrasonicate for 30 minutes, cool, add the mobile phase to volume and shake well. (containing 0.2 mg of ammonium glycyrrhizinate, equal to 0.1959 mg of glycyrrhizinic acid per ml).

Test solution Weigh accurately 0.25 g in a 50 ml volumetric flask, add 45 ml of the mobile phase, ultrasonicate for 30 minutes (power, 200 W; frequency, 50 kHz), cool, add the mobile phase to volume, shake well and filter. Measure accurately 10 ml of the successive filtrate to a 25 ml volumetric flask, add the mobile phase to volume and shake well.

Procedure Inject accurately 10 μl of each of the reference solution and the test solution into column, respectively, calculate the content.
It contains not less than 8.0 per cent of glycyrrhizinic acid ($C_{42}H_{62}O_{16}$), calculate with reference to the dried drugs.

Action It is a demulcent, often prescribed together with antitussives to resolve phlegm, which effects to relieve irritation to the mucosa of the throat and spasm of the gastrointestinal smooth muscles, and it has the similar action as desoxycorticosterone.

Indications Bronchitis, pharyngolaryngitis, bronchial asthma and chronic adrenocortical insufficiency.

Precaution Long term administration in large doses may cause side effects such as edema and hypertension. The symptoms will gradually disappear after stopping of administration.

Storage Preserve in tightly closed containers, stored in a cool and dry place.

Preparation Liquorice Liquid Extract.

Extractum Glycyrrhizae Liquidum (甘草流浸膏, Gancao Liujingao)

Liquorice Liquid Extract

Liquorice Liquid Extract is prepared from Extractum Glycyrrhizae.

Procedure To 300-400 g of the Extractum Glycyrrhizae, add a quantity of water to dissolve on heating with constant stirring, filter and add 85% ethanol slowly to the filtrate

with stirring until the ethanol content of the solution reaches about 65%. Allow to stand over night and decant carefully the supernatant. Add 65% ethanol to the residue, stir thoroughly and allow to stand over night, remove the supernatant and extract the residue again with 65% ethanol. Combine the three extracts, filter, recover the ethanol and determine the content of glycyrrhetic acid. Add a quantity of water and ethanol to make the contents of glycyrrhetic acid and ethanol to comply with the requirements. Add a quantity of strong ammonia TS to adjust the pH value, allow to stand until it becomes clear, decant the supernatant and filter.

Description A brown or reddish-brown liquid; taste, sweet, a little bitter and astringent.

Identification Dissolve 1 ml in 40 ml of water, extract with three 20-ml quantities of *n*-butanol, centrifuged if necessary. Combine the *n*-butanol solutions, wash with three 20-ml quantities of water and evaporate the *n*-butanol solution to dryness. Dissolve the residue in 5 ml of methanol, used as the test solution. Dissolve ammonium glycyrrhizinate CRS in methanol to produce a solution containing 2 mg per ml as the reference solution. Carry out the method for thin layer chromatography (Appendix Ⅵ B), using silica gel G as the coating substance prepared with a 1% solution of sodium hydroxide, and a mixture of ethyl acetate, formic acid, glacial acetic acid and water (15 : 1 : 1 : 2) as the mobile phase. Apply separately to the plate 5 μl of each of the two solutions. After developing and removal of the plate, dry in air. Spray with a 10% solution of sulfuric acid in ethanol, heat at 105℃ to the spots clear and examine under ultraviolet light at 365nm. An orange-yellow fluorescent spot in the chromatogram obtained with the test solution corresponds in position and colour to the spot in the chromatogram obtained with the reference solution.

pH value 7.5-8.5 (Appendix Ⅶ G).

Ethanol content Not less than 20 per cent and not more than 25 per cent (Appendix Ⅸ M).

Other requirements Comply with the general requirements for liquid extracts and extracts (Appendix Ⅰ O).

Assay Carry out the method for high performance liquid chromatography (Appendix Ⅵ D).

Chromatographic system and system suitability Use octadecylsilane bonded silica gel as the stationary phase and a mixture of methanol, 0.2 mol/L ammonium acetate and glacial acetic acid (67 : 33 : 1) as the mobile phase. As detector a spectrophotometer set at 250 nm. The number of theoretical plates for the column is not less than 2000, calculated with the reference to the peak of glycyrrhizinic acid.

Reference solution Weigh accurately 10 mg of ammonium glycyrrhizinate CRS in 50 ml volumetric flask, add 45 ml of the mobile phase, ultrasonicate to dissolve, cool, add the mobile phase to volume and shake well. (containing 0.2 mg of ammonium glycyrrhizinate, equal to 0.1959 mg of glycyrrhizinic acid per ml).

Test solution Measure accurately 1 ml in a 50 ml volumetric flask, add 20 ml of the mobile phase, ultrasonicate for 30 minutes (power, 200 W; frequency, 50 kHz), cool, add mobile phase to volume, shake well and filter. Measure accurately 10 ml of the successive filtrate to a 25 ml volumetric flask, add the mobile phase to volume and shake well.

Procedure Inject accurately 10 μl of each of the reference solution and the test solution into column, respectively, calculate the content.

It contains not less that 1.8 per cent (g/ml) of glycyrrhizinic acid ($C_{42}H_{62}O_{16}$).

Action It is a demulcent, often prescribed together with antitussives to resolve phlegm, which effects to relieve irritation to the mucosa of the throat and spasm of the gastrointestinal smooth muscles, and it has the similar action as desoxycorticosterone.

Indications Bronchitis, pharyngolaryngitis, bronchial asthma and chronic adrenocortical insufficiency.

Usage and dosage 2-5 ml, 6-15 ml a day.

Precaution As described under Extractum Glycyrrhizae.

Storage Preserve in tightly closed containers.

Extractum Leonuri Liquidum (益母草流浸膏, Yimucao Liujingao)

Liquid Extract of Motherwort Herb

Liquid Extract of Motherwort Herb is the liquid extract prepared from Herba Leonuri.

Procedure Cut 1000 g of Herba Leonuri into pieces, decoct 3 times, combine the decoctions, filter and concentrate to about 500 ml. Allow to cool, add an equal quantity of ethanol, stir well and allow to stand for precipitation. Filter, wash the precipitate with 45% ethanol, combine the washing and the filtrate, and recover ethanol in vacuum. Allow to cool, filter, adjust the content of ethanol to meet the requirement, make up to a volume of 1000 ml, allow to stand for clarification and filter.

Description A dark brown liquid; taste, slightly bitter.

Identification Dissolve a quantity of stachydrine hydrochloride CRS in methanol to prepare a solution containing 1 mg per ml as the reference solution. Carry out the method for thin layer chromatography (Appendix Ⅳ B), using silica gel G mixed with sodium carboxymethyl cellulose as the coating substance and a mixture of ethyl acetate, *n*-butanol and hydrochloric acid (1 : 8 : 3) as the mobile phase. Apply separately to the plate 4 μl of each of the above reference solution and the test solution obtained under Assay. After developing and removal of the plate, dry in air. Spray with a dilute potassium iodobismuthate TS. The spot in the chromatogram obtained with the test solution corresponds in position and colour to the spot in chromatogram obtained with the reference solution.

Ethanol content Not less than 16 per cent and not more than 20 per cent (Appendix Ⅸ M).

Other requirements Complies with the general requirements for liquid extracts and extracts (Appendix Ⅰ O).

Assay Weigh accurately 5 g, add dilute hydrochloric acid to adjust to pH 1-2, and transfer to a strongly acidic cation exchange resin column (2 cm in diameter, 15 cm long), packed with sodium type of resin (732). Elute with water at the speed of 8 ml per minute to the eluate nearly colourless, discard the water eluate and then elute with 150 ml of 2 mol/L ammonia solution at the speed of 2 ml per minute. Collect the ammonia eluates and evaporate to dryness. Dissolve the reside in a quantity of methanol, transfer to a 10 ml volumetric flask, dilute with methanol to volume, shake well, allow to stand and use the supernatant as the test solution. Dissolve a quantity of stachydrine hydrochloride CRS, dried previously for 3 hours at 105℃, accurately weighed, in methanol to prepare a solution containing 2 mg per ml as the reference solution. Carry out the method for thin layer chromatography (Appendix Ⅵ B), using silica gel G as the coating substance and a mixture of ethyl acetate, *n*-butanol and hydrochloric acid (1 : 8 : 3) as the mobile

phase. Apply accurately 8 μl of the test solution, 3μl and 8 μl of the reference solution to the plate, spotted alternately. After developing and removal of the plate, dry in air. Heat at 105℃ for 15 minutes, allow to cool and spray with a mixture of dilute potassium iodobismuthate TS and a 1% solution of ferric chloride in ethanol (10 : 1) to the spots clear, dry in air. Cover the plate with a same sized glass and fix with tape. Carry out the method for thin layer chromatography (Appendix Ⅵ B, thin layer chromatographic scanning method), scan at the wavelength of $\lambda_S = 510$ nm, $\lambda_R = 700$ nm. Measure the integration values of the absorbance from the test solution and the reference solution respectively, and calculate the content.
It contains not less than 0.20 per cent of stachydrine hydrochloride ($C_7H_{13}NO_2 \cdot HCl$).

Action To promote blood circulation and regulate menstruation.

Indications Menstrual disorders and postpartum lochiorrhagia with manifestations of hypomenorrhea, continuous dripping of menstrual blood and long-term bleeding after childbirth; postpartum subinvolution of the uterus with above symptoms.

Usage and dosage 5-10 ml; 15-30 ml a day.

Precaution Contraindicated in pregnancy.

Storage Preserve in tightly closed containers.

Extractum Polygalae Liquidum (远志流浸膏, Yuanzhi Liujingao)

Thinleaf Milkwort Liquid Extract

Thinleaf Milkwort Liquid Extract is the liquid extract prepared from Radix Polygalae.

Procedure Carry out the method of percolation as described under liquid extracts and extracts (Appendix Ⅰ O), macerate the medium powder of Radix Polygalae with 60% ethanol for 24 hours and percolate slowly at a speed of 1-3 ml per minute. Collect 850 ml of the initial percolate in a seperate container, and continue the percolation until the active components completly extracted. Evaporate the successive percolate below 60℃ to a thick extract and mix well with the initial percolate. Add dropwise a quantity of strong ammonia TS to adjust the extract slightly alkaline and with ammonia odor smelled. Dilute with 60% ethanol to 1000 ml, allow to stand until it becomes clear and filter.

Description A brown liquid.

Ethanol content Not less than 38 per cent and not more than 48 per cent (Appendix Ⅸ M).

Other requirements Complies with the general requirements for liquid extracts and extracts (Appendix Ⅰ O).

Action To expel phlegm.

Indications Coughing with difficult expectoration of phlegm.

Usage and dosage 0.5-2 ml, 1.5-6 ml a day.

Storage Preserve in tightly closed containers.

Preparation Thinleaf Milkwort Tincture.

Extractum Rhei Liquidum (大黄流浸膏, Dahuang Liujingao)

Rhubarb Liquid Extract

Rhubarb Liquid Extract is the liquid extract prepared from Radix et Rhizoma Rhei.

Procedure Carry out the percolation as described under the liquid extracts and extracts (Appendix Ⅰ O). Macerate 1000 g of the coarse powder of Radix et Rhizoma Rhei in 60% ethanol for 24 hours and percolate slowly at a speed of 1-3 ml per minute. Reserve 850 ml of the initial percolate and continue to percolate until the percolate becomes pale in colour. Concentrate the successive percolate to a thick extract, mix well with the initial percolate and dilute with 60% ethanol to produce a volume of 1000 ml. Allow to stand until the fluid becomes clear and filter.

Description A brown liquid; taste, bitter and astringent.

Identification (1) To 1 ml add 10 ml of 1% sodium hydroxide solution, boil, cool and filter. To 2 ml of the filtrate add several drops of dilute hydrochloric acid to adjust to acidic and shake with 10 ml of ether. The ether layer becomes yellow. Separate the ether layer and shake with 5 ml of ammoina TS. The ether layer still shows yellow and the ammonia layer shows persisting cherry-red colour.
(2) Evaporate 1 ml in a porcelain crucible to dryness on a water bath. Cover the crucible with a glass slide, heat slowly on an asbestos gauze with direct flame until sublimates appear on the slide, and cool. Observe under a microscope, rhombic needles, feathery and irregular crystals are shown. The crystals are dissolved and a violet-red colour is produced on adding dropwise sodium hydroxide TS.
(3) Evaporate 0.1 ml to dryness, dissolve the residue in 20 ml of water and filter. To the filtrate add 2 ml of hydrochloric acid, heat under reflux for 30 minutes, cool immediately and extract with two 20-ml quantities of ether. Combine the ether extracts, evaporate to dryness, dissolve the residue in 1 ml of chloroform as the test solution. Macerate 0.1 g of Radix et Rhizoma Rhei reference drug in 20 ml of ethanol for 1 hour and filter. Evaporate 5 ml of the filtrate to dryness, dissolve the residue in 10 ml of water and 1 ml of hydrochloric acid to prepare the reference drug solution in the same manner as described in the test solution preparation, beginning at the words "heat under reflux for 30 minutes". Dissolve rhein CRS in methanol to produce a solution containing 1 mg per ml as the reference solution. Carry out the method for thin layer chromatography (Appendix Ⅵ B), using silica gel H containing sodium carboxymethylcellulose as the coating substance and the upper layer of a mixture of petroleum ether (30-60℃), ethyl formate and formic acid (15 : 5 : 1) as the mobile phase. Apply separately to the plate 2 μl of the test solution and 4 μl of each of the reference drug solution and reference solution. After developing and removal of the plate, dry in air, and examine under ultraviolet light at 365 nm. The five orange fluorescent spots in the chromatogram obtained with the test solution correspond in position and colour to the spots in the chromatogram obtained with the reference drug solution; and an orange fluorescent spot corresponds in position and colour to the spot in the chromatogram obtained with the reference solution. The colour of spots turns red on exposure to ammonia vapour.

Rhaponticin To 0.2 ml add 2 ml of methanol, macerate warmly for 10 minutes and cool. Apply 10 μl of the supernatant to a stripe of filter paper, using 45% ethanol as the mobile phase. After developing and removal of the paper, dry in air, stand for 10 minutes, and examine under ultraviolet light at 365 nm. No persistent bright purple fluorescence spot exhibits.

Ethanol content Not less than 40 per cent and not more than 50 per cent (Appendix Ⅸ M).

Total solid Place about 1 g in a tared evaporating dish, weighed accurately, and evaporate to dryness on a water

bath. Dry the residue at 105 ℃ for 3 hours, cool in a desiccator for 30 minutes and weigh rapidly. The total solid is not less than 30.0 per cent (g/g).

Other requirements Complies with the general requirements for liquid extracts and extracts (Appendix I O).

Assay Carry out the method for high performance liquid chromatography (Appendix VI D).

Chromatographic system and system suitability Use octadecylsilane bonded silica gel as the stationary phase and a mixture of methanol and 0.1% phosphoric acid (80 : 20) as the mobile phase. As detector a spectrophotometer set at 254 nm. The number of theoretical plates for the column is not less than 1500, calculated with the reference to the peak of emodin.

Reference solution Dissolve respectively a quantity of emodin CRS and chrysophanol CRS, accurately weighed, in methanol to produce a mixture containing 5 μg each per ml as the reference solution.

Test solution Weigh accurately 0.2 g in a conical flask, evaporate to dryness, add 25 ml of methanol and weigh. Heat under reflux for 30 minutes, cool, weigh again, replenish the loss of weight with methanol, shake well and filter. Measure accurately 5 ml of the successive filtrate to a round bottom flask, expel methanol, add 10 ml of 2.5 mol/L sulfuric acid solution, and ultrasonicate (power, 120 W; frequency, 45 kHz) for 5 minutes. Add 10 ml of chloroform, heat under reflux for 1 hour, cool, transfer to a separating funnel, wash the container with a quantity of chloroform, and combine to the separating funnel. Separate the chloroform layer, extract the acid liquid by shaking with two 10-ml quantities of chloroform. Filter the chloroform layer through a funnel packed with 2 g of anhydrous sodium sulfate, recover the solvent to dryness, add accurately 25 ml of methanol to the residue, and weigh. Dissolve the residue on a water bath, cool, weigh again, replenish the loss of weight with methanol, and shake well. Filter the supernatant through a filter membrane of 0.45 μm, and use the successive filtrate as the test solution.

Procedure Inject accurately 20 μl of each of the reference solution and the test solution into the column, respectively, and calculate the content.

It contains not less than 0.45 per cent of the total amount of emodin ($C_{15}H_{10}O_5$) and chrysophanol ($C_{15}H_{10}O_4$).

Action Irritative purgative and stomachic with bitter in flavor.

Indications Constipation and poor appetite.

Usage and dosage 0.5-1 ml; 1-3 ml a day.

Storage Preserve in tightly closed containers.

Extractum Scutellariae Siccus (黄芩提取物, Huangqin Tiquwu)

Baical Skullcap Extract

Baical Skullcap Extract is prepared from Radix Scutellariae.

Procedure Decoct Radix Scutellariae with water, combine the decoctions, concentrate to a quantity, adjust to pH 1.0-2.0 with hydrochloric acid, keep the temperature at 80℃, allow to stand and filter. Add a quantity of water to the precipitate, stir well, adjust to pH 7.0 with 40% sodium hydroxide solution, add an equal quantity of ethanol, stir to dissolve and filter. Adjust the filtrate to pH 1.0-2.0 with hydrochloric acid, keep the temperature at 60℃, allow to stand and filter. Rinse the precipitate stepwise with a quantities of water and ethanol of different concentrations to pH 7.0, expel ethanol and dry in vacuum.

Description Bright yellow or brownish-yellow powder; taste, weak and slightly bitter.

Identification Dissolve 1 mg in 1 ml of methanol as the test solution. Take 1 g of Radix Scutellariae reference drug, ultrasonicate with 20 ml of methanol for 20 minutes, filter and evaporate the filtrate to dryness. Dissolve the residue in 1 ml of methanol as the reference drug solution. Dissolve a quantity of baicalin CRS in methanol to produce a solution containing 1 mg per ml as the reference solution. Carry out the method for thin layer chromatography (Appendix VI B), using polyamide as the coating substance and acetic acid as the mobile phase. Apply separately 2 μl of each of the three solutions to the plate, after developing and removal of the plate, dry in air, and examine under ultraviolet light at 365 nm. The fluorescence spots in the chromatogram obtained with the test solution correspond in position and colour to the spots in the chromatograms obtained with the reference drug solution and with the reference solution.

Water Not more than 5.0 per cent (Appendix IX H, method 1).

Residue on ignition Not more than 0.8 per cent (Appendix IX J).

Heavy metal Carry out the limit test for heavy metals (Appendix IX E, method 2), not more than 20 ppm, using the residue obtained from the Determination of Residue on Ignition.

Assay Carry out the method for high performance liquid chromatography (Appendix VI D).

Chromatographic system and system suitability Use octadecylsilane bonded silica gel as the stationary phase and a mixture of methanol, water and phosphoric acid (47 : 53 : 0.2) as the mobile phase. As detector a spectrophotometer set at 280 nm. The number of theoretic plates for the column is not less than 2500, calculated with the reference to the peak of baicalin.

Reference solution Dissolve a quantity of baicalin CRS, accurately weighed, in methanol to produce a solution containing 60 μg per ml.

Test solution Weigh accurately 10 mg in a 25 ml volumetric flask, add methanol to volume, and shake well. Measure accurately 5 ml in a 25 ml volumetric flask, add methanol to volume, shake well, filter, and use the successive filtrate as the test solution.

Procedure Inject accurately 10 μl of each of the reference solution and the test solution into the column, respectively, and calculate the content.

It contains not less than 85.0 per cent of baicalin ($C_{21}H_{18}O_{11}$), calculated with reference to the dried drug.

Usage and Dosage According to the dosage of each formula.

Action Clear *heat* and remove *dampness*, purge *fire* and counteract *toxicity*, and check bleeding and prevent miscarriage.

Indications Constriction in the chest, nausea and vomiting due to *damp-warm* and *summer-heat-warm*, stuffiness in the chest due to *damp-heat*, dysentery, jaundice, cough due to excessive *lung-heat*, higher fever and polydipsia, hematemesis due to heat in blood, carbuncles and abscesses, and threatened abortion.

Storage Preserve in tightly closed containers, stored in a cool and dry place.

Extractum Zingiberis Liquidum
(姜流浸膏，Jiang Liujingao)

Ginger Liquid Extract

Ginger Liquid Extract is the liquid extract prepared from Rhizoma Zingiberis.

Procedure Carry out the method for percolation as described under the liquid extracts and extracts (Appendix Ⅰ O). Macerate 1000 g of powder of Rhizoma Zingiberis in 90% ethanol for 24 hours and percolate slowly at a speed of 1-3 ml per minute. Collect 850 ml of the initial percolate and continue the percolation, until the percolate becomes nearly colourless and the odour and taste of ginger becomes very slight. Evaporate the successive percolate below 60℃ to a thick extract, mix well with the initial percolate, and filter. Take 20 ml of the extract for the Assay and dilute the rest with 90% ethanol to make the contents of ether-soluble extractive and ethanol to comply with the requirements. Allow to stand until the fluid becomes clear, then filter.

Description A brown liquid; odour, aromatic resembling Rhizoma Zingiberis; taste, pungent.

Ethanol Content Not less than 72 per cent and not more than 80 per cent (Appendix Ⅸ M).

Other requirements Complies with the general requirements for liquid extracts and extracts (Appendix Ⅰ O).

Assay Expel ethanol of 20 ml of the liquid extract, accurately measured, and cool. Add 50 ml of ether, stir with a glass rod to dissolve ether-soluble substances and filter. Extract the residue with two to three 50-ml quantities of ether, and filter. Combine the ether solutions, recover ether at a low temperature, dry the residue for 24 hours in a desiccator over sulfuric acid and weigh accurately. Calculate the content of ether-soluble extractives.
It contains not less than 4.5 per cent of ether-soluble extractive.

Action To invigorate the stomach and expel wind.

Usage and dosage 0.5-2 ml; 1.5-6 ml daily.

Storage Preserve in tightly closed containers.

Preparation Ginger Tincture

Mentholum
(薄荷脑，Bohenao)

Menthol

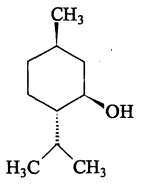

$C_{10}H_{20}O$ 156.27

Menthol is a saturated, cyclic alcohol obtained from peppermint oil.

Description Colourless needle or prismatic crystals or a white, crystalline powder. Odour, aromatic, resembling that of peppermint; taste, warm, and then cool. A solution in ethanol is neutral.
Very soluble in ethanol, chloroform, ether, liquid paraffin or volatile oils; very slightly soluble in water.

Melting point 42-44℃ (Appendix Ⅵ C).

Specific optical rotation −49° to −50°, in a solution of 0.1 g per ml in ethanol (Appendix Ⅶ E).

Identification (1) Dissolve 1 g in 20 ml of sulfuric acid, an orange-red colour is produced; after 24 hours, a colourless oil layer without aromatic odour of menthol is separated (distinction from thymol).
(2) Dissolve 50 mg in 1 ml of glacial acetic acid, add a cool mixture of 6 drops of sulfuric acid and 1 drop of nitric acid; only a pale yellow colour is produced (distinction from thymol).

Non-volatile matter Heat 2 g of the drug in a tared evaporating dish, on a water bath, evaporate slowly and dry to constant weight at 105℃. The residue is not more than 1 mg.

Action and indications As described under Peppermint Oil.

Usage and dosage 0.02-0.1 g, often in buccal tablet; or for topical application in spirit, or ointment.

Storage Preserve in tightly closed containers, stored in a cool place.

Oleum Anisi Stellati
(八角茴香油，Bajiao Huixiangyou)

Anise Oil

Anise Oil is the volatile oil obtained by steam distillation from the fresh branch and leaf or the ripe fruit of *Illicium verum* Hook. f. (Fam. Magnoliaceae).

Description A colourless or pale yellow clear liquid; odour and taste, similar to those of Fructus Anisi Stellati. Turbiding or crystallizing on cooling, clear again after heating.
Freely soluble in 90% ethanol.

Relative density 0.975-0.988, at 25℃ (Appendix Ⅶ A).

Congealing point Not lower than 15℃ (Appendix Ⅶ D).

Optical rotation −2° to +1° (Appendix Ⅶ E).

Refractive index 1.553-1.560 (Appendix Ⅶ F).

Insoluble matter in ethanol To 1 ml of the oil add 3 ml of 90% ethanol, the solution is clear.

Heavy metals Carry out the limit test for heavy metals (Appendix Ⅸ E, method 2), using 2 g: Not more than 5 ppm.

Action and indications To season by the aromatic nature, invigorate the spleen function.

Usage and dosage 0.02-0.2 ml; 0.06-0.6 ml, daily.

Precaution If there is turbidity or crystallization, heat it on a water bath for dissolving, and shake well before taking.

Storage Preserve in tightly closed containers, stored in a cool place and protected from light.

Oleum Camelliae (茶油，Chayou)

Tea-seed Oil

Tea-seed Oil is the fatty oil obtained by squeezing from the ripe seed of *Camellia oleifera* Abel or *Camellia meiocarpa* Hu. ms. (Fam. Theaceae).

Description A pale yellow, clear liquid.
Freely soluble in chloroform, ether or carbon bisulfite; slightly soluble in ethanol.

Relative density 0.909-0.915, at 25℃ (Appendix Ⅶ A).

Refractive index 1.466-1.470, at 25℃ (Appendix Ⅶ F).

Identification Add 2 ml of the oil carefully to 10 ml of cool, freshly prepared fuming nitric acid, sulfuric acid and water (1∶1∶1), allow to stand for a moment, a bluish-green colour is produced between two layers.

Tung oil Dissolve 3 ml of the oil in 3 ml of petroleum ether to form a clear liquid. Add a small quantity of sodium nitrite crystal and several drops of dilute sulfuric acid, bubbles are produced immediately; shake strongly, allow it to stand, the oil layer is clear and there is no turbity at the junction of oil layer and acid layer.

Cotton-seed oil Measure 5 ml of the oil to a test tube, add 5 ml of a mixture containing equal volumes of sulfur in carbon disulfide solution (1→100) and amyl alcohol, heat carefully on a saturated natrium chloride bath until the bubbles stop (removed from carbon disulfied); continue to heat on a boiling water bath, a red colour should not be produced within two hours.

Acid value Not more than 3 (Appendix Ⅸ N).

Saponification value 185-196 (Appendix Ⅸ N).

Iodine value 80-88 (Appendix Ⅸ N).

Usage Used as the raw material of injectable Tea-seed Oil and the ointment base.

Storage Preserve in tightly closed containers, stored in a cool place, and protected from light.

Oleum Cinnamomi (肉桂油，Rouguiyou)

Cassia Bark Oil

Cassia Bark Oil is the volatile oil obtained by steam distillation from the dried branch and leaf of *Cinnamomum cassia* Presl (Fam. Lauraceae).

Description Yellow or yellowish-brown clear liquid; odour characteristic and aromatic, resembling Cortex Cinnamomi; taste sweet and pungent. The colour darkens gradually and becomes viscid on exposure to the air or on long storage.
Freely soluble in ethanol or glacial acetic acid.

Relative density 1.055-1.070 (Appendix Ⅶ A).

Refractive index 1.602-1.614 (Appendix Ⅶ F).

Identification Cool to 0℃, shake with an equal volume of nitric acid, a crystalline precipitate is produced.

Heavy metals To 10 ml of the oil add 10 ml of water and 1 drop of hydrochloric acid, shake, then saturate the solution with hydrogen sulfide gas, both the aqueous layer and oil layer show no colour change.

Assay Carry out the method for gas chromatography (Appendix Ⅵ E).

Chromatographic system and system suitability Use 10% macrogol (PEG)-20M as the stationary phase; maintain the column temperature at 190℃. The number of theoretical plates of the column is not less than 3000, calculated with the reference to the peak of cinnamaldehyde.

Reference solution Dissolve a quantity of cinnamaldehyde CRS, weigh accurately, in dehydrated ethanol to prepare a solution containing 4 mg per ml.

Test solution Weigh accurately 50 mg of the oil in a 10 ml volumetric flask, dilute with dehydrated ethanol to volume, and mix well.

Procedure Inject accurately 3 μl of each of the reference solution and the test solution, into the column, and calculate the content.
It contains not less than 75 per cent of cinnamaldehyde (C_9H_8O).

Action To expel pathogenic *wind* and invigorate the stomach function.

Usage and dosage 0.02-0.2 ml; 0.06-0.6 ml, daily.

Storage Preserve in tightly closed containers, stored in a cool place and protected from light.

Oleum Curcumae (莪术油 Ezhuyou)

Curcuma Oils

Curcuma Oils is the volatile oil obtained by steam distillation from Rhizoma Curcumae (Wenezhu).

Description A pale brown or dark brown clear liquid; odour, characteristic; taste, slightly bitter and pungent.
Easily dissolved in methanol, ethanol, acetone, ethyl acetate, chloroform, ether, petroleum ether or benzene. Slightly dissolved in water.

Relative Density 0.970-0.990 (Appendix Ⅶ A).

Specific Optical Rotation +20°to+25°, in a solution of 50 mg per ml in ethanol (Appendix Ⅶ E).

Refractive Index 1.500-1.510 (Appendix Ⅶ F).

Identification Dissolve 4 mg of curcuma oils in 1 ml of petroleum ether (30-60℃) as the test solution. Dissolve curcuma oils reference extract in petroleum ether (30-60℃) to prepare a solution containing 4 mg per ml as the reference extract solution. Dissolve separately a quantity of curcumenol CRS and germacrone CRS in petroleum ether (30-60℃) to prepare the solutions each containing 1 mg per ml, respectively, as the reference solutions. Carry out the method for thin layer chromatography (Appendix Ⅵ B), using silica gel G as the coating substance and a mixture of petroleum ether (30-60℃) and ethyl acetate (9∶1) as the mobile phase. Apply separately 10 ml of each of the four solutions to the plate. After developing and removal of plate, dry in air. Spray with vanillin-sulfuric acid TS to the plate, heat at 105℃ to the spots clear. The spots in the chromatogram obtained with the test solution correspond in position and colour to the spots in chromatogram obtained with the reference extract solution and reference solution. Examine under ultraviolet light at 365 nm, the fluorescent spots in the chromatogram obtained with the test solution

correspond in position and colour to the spots in chromatogram obtained with the reference extract solution and reference solution.

Assay Carry out the method for high performance liquid chromatography (Appendix Ⅵ D).

Chromatographic system and system suitability Use cyanogen-decylsilane bonded silica as the stationary phase and a mixture of acetonitrile and water (35 : 65) as the mobile phase. As detector a spectrophotometer set at 210 nm, maintain the column temperature at 35℃. The number of the theoretical plates for the column is not less than 5000, calculated with the reference to the peak of germacrone.

Reference solution Dissolve 20 mg of germacrone CRS in ethanol, accurately weighed, in a 50 ml volumetric flask, add ethanol to volume, and shake well. Measure accurately 2 ml to 50 ml volumetric flask, add the mobile phase to volume and shake well (containing 16 μg of germacrone per ml).

Test solution Weigh accurately 0.1 g of curcuma oils in 50 ml volumetric flask, add ethanol to volume and shake well. Measure accurately 2 ml to 25 ml volumetric flask, add the mobile phase to volume, shake well, filter, and use the successive filtrate as the test solution.

Procedure Inject accurately 20 ml of each of the reference solution and the test solution into the column, respectively, and calculate the content.
It contains not less than 10.0 per cent of germacrone ($C_{14}H_{22}O$).

Category Antivirus and anticancer

Storage Preserve in tightly closed containers, protected from light, and stored in cool place.

Oleum Eucalypti
(桉油, Anyou)

Eucalyptus Oil

Eucalyptus Oil is the volatile oil obtained by steam distillation from the plants of *Eucalyptus globulus* Labill. (Fam. Myrtaceae), *Cinnamomum camphora* (L.) Sieb. (Fam. Lauraceae) or other plants belong to the same genus of these two families.

Description A colourless or pale yellow clear liquid; odour, characteristic and aromatic, resembling to camphor; taste pungent and cool; darkens slightly on long storage.
Freely soluble in 70% ethanol.

Relative density 0.895-0.920 (Appendix Ⅶ A).

Refractive index 1.458-1.468 (Appendix Ⅶ F).

Identification Dissolve 0.1 ml in dehydrated ethanol to make 1 ml by shaking, use the solution as the test solution. Dissolve cineol CRS in the same manner, use as the reference solution. Carry out the method for thin layer chromatography (Appendix Ⅵ B), using silica gel G as the coating substance and cyclohexane and ethyl acetate (9.5 : 0.5) as the mobile phase. Apply separately to the plate 2 μl of each of the solutions. After developing and removal of the plate, dry in air and spray with 1% solution of vanillin in sulfuric acid. The spot in the chromatogram obtained with the test solution corresponds in position and colour to the spot in the chromatogram obtained with the reference solution.

Phellandrene To 2.5 ml of the oil add 12.5 ml of petroleum ether (60-90℃), shake well. Add 5 ml of sodium nitrite solution (5 → 8) and then 5 ml of glacial acetic acid gradually, stir, no crystals are separated within ten minutes.

Heavy metals Carry out the limit test for heavy metals (Appendix Ⅸ E, method 2), using 1 g, not more than 10 ppm.

Assay Carry out the Determination of cineol (Appendix Ⅹ C).
It contains not less than 70 per cent (g/g) of cineol ($C_{10}H_{18}O$).

Action To dispel *wind* and alleviate pain.

Indications Itch of skin, neuralgia.

Storage Preserve in tightly closed containers, stored in a cool place, and protected from light.

Oleum Linderae
(香果脂, Xiangguozhi)

Spiceleaf Kernel Oil

Spiceleaf Kernal Oil is the solid fat obtained by squeezing from the ripe kernal of *Lindera communis* Hemsl. (Fam. Lauraceae), or by hydrogenation and purification of the fat obtained by squeezing from the ripe seed.

Description A white, crystalline powder, or pale yellowish-white mass. Texture light. Odour, slight; taste, weak.
Freely soluble in chloroform or ether; soluble in dehydrated ethanol; very slightly soluble in ethanol; insoluble in water.

Melting range 30-36℃ (Appendix Ⅶ C).

Acid value Not more than 3 (Appendix Ⅸ N).

Saponification value 255-280 (Appendix Ⅸ N).

Iodine value 1-5 (Appendix Ⅸ N).

Usage Suppository base.

Storage Preserve in tightly closed containers, stored in a cool place, and protected from light.

Oleum Menthae Dementholatum
(薄荷素油, Bohesuyou)

Peppermint Oil

Peppermint Oil is the volatile oil obtained by steam distillation from the fresh stem and leaf of *Mentha haplocalyx* Briq. (Fam. Labiatae). The oil obtained is cooled, removed partly from menthol.

Description A colourless or pale yellow clear liquid, gradually becoming dark in colour with long storage. Odour, characteristic and aromatic; taste, pungent, and then cool.
Freely miscible with ethanol, chloroform or ether.

Relative density 0.888-0.908 (Appendix Ⅶ A).

Optical rotation −24°--17° (Appendix Ⅶ E).

Refractive index 1.456-1.466 (Appendix Ⅶ F).

Identification Dissolve 0.1 g of the volatile oil in 5 ml of n-hexane as the test solution. Prepare a solution of Peppermint oil reference extract in the same manner as the reference

extract solution. Carry out the method for thin layer chromatography (Appendix Ⅵ B), using silica gel GF_{254} as the coating substance and a mixture of toluene and ethyl acetate (19 : 1) as the mobile phase. Apply separately to the plate 5 μl of the above two solutions. After developing and removal of the plate, dry in air. Examine under ultraviolet light at 254 nm, the fluoresent spots in the chromatogram obtained with the test solution correspond in position and colour to the spots in the chromatogram obtained with the reference extract solution. Spray with anisaldehyde TS and heat to the spots clear at 105℃. Examine in daylight, spots in the chromatogram obtained with the test solution correspond in position and colour to the spots in the chromatogram obtained with the reference extract solution. Examine under ultraviolet light at 365 nm, the fluoresent pots in the chromatogram obtained with the test solution correspond in position and colour to the spots in the chromatogram obtained with the reference extract solution.

Colour Not more intensely coloured than colour matching solution Y_6.

Insoluble matter in ethanol To 1 ml add 3.5 ml of 70% ethanol, the solution should be clear.

Acid value Not more than 1.5 (Appendix Ⅸ N).

Assay Carry out the method for gas chromatography (Appendix Ⅵ E).

Chromatographic system and system suitability Use capillary column of macrogol (HP-FFAP) (0.20 mm in internal diameter, and 25 meter long). Column temperature gradient: initial temperature at 60℃, maintain 4 minutes; increase at 2℃ per minute to 100℃, then increase at 10℃ per minute to 230℃, maintain 1 minute. Maintain injector temperature at 250℃ and detector temperature at 250℃. The split ratio is 10 : 1. The number of theoretical plates of the column is not less than 20000, calculated with the reference to the peak of cyclohexanone.

Correction factor Dissolve a quantity of cyclohexanone, accurately weighed, in n-hexane to prepare a solution containing 8 mg per ml as the internal standard solution. Dissolve about 50 mg of (-) -Menthone CRS and 80 mg of menthplum CRS, weighe accurately, in a 25 ml volumetric flask, add accurately 2 ml of the internal standard solution, dilute to volumn with n-hexane, and mix well. Inject accurately 1 μl of the solution into the column, calculate the correction factor for cyclohexanone.

Procedure Weigh accurately 0.2 g, transfer to a 25 ml volumetric flask, add accurately 2 ml of the internal standard solution, and dilute to volumn with *n*-hexane, mix well. Inject accurately 1 μl of the solution into the column and measure. It contains not less than 18.0 percent and not more than 26.0 percent of (-) -Menthone ($C_{10}H_{18}O$). And it contains not less than 28.0 percent and not more than 40.0 percent of menthplum ($C_{10}H_{20}O$).

Action and indications Aromatic, flavouring agent, carminative. Apply to the skin or mucous membrane to give cooling feeling and to relieve pain or other uncomfortable symptoms.

Usage and dosage 0.02-0.2 ml; 0.06-0.6 ml, daily.

Storage preserve in tightly closed containers, stored in a cool place and protected from light.

Oleum Ocimi Gratissimi (丁香罗勒油, Dingxiang Luoleyou)

Ocimum Oil

Ocimum Oil is the volatile oil obtained by steam distillation from the herb of *Ocimum gratissimum* L. (Fam. Labiatae).

Description A pale yellow, clear liquid, gradually becoming brown and viscid on exposure to the air or long storage. Odour, aromatic; taste, pungent, with a sensation of numbness and fullness.
Freely soluble in ethanol, ether or glacial acetic acid; practically insoluble in water.

Relative density 1.030-1.050 (Appendix Ⅶ A).

Refractive index 1.530-1.540 (Appendix Ⅶ F).

Identification Dissolve 0.5 ml in 1 ml of ethanol, add 5-10 drops of freshly prepared 5% vanillin in hydrochloric acid, shake well, and a dark green colour is produced.

Water-soluble phenols To 1 ml add 20 ml of hot water, shake well, cool, and filter through moistened filter paper. Add 1 drop of ferric chloride TS to the filtrate, A blue or purple colour should not be produced except a transient greyish green colour.

Heavy metals Carry out the limit test for heavy metals (Appendix Ⅸ E, method 2), using 1.0 g, not more than 10 ppm.

Assay Carry out the method for gas chromatography (Appendix Ⅵ E).

Chromatographic system and system suitability Use capillary column packed with 10% methylsilicone rubber (SE-30) as the stationary phase, column temperature set at 110℃. The number of theoretical plates of the column is not less than 3000, caculated with the reference to the peak of eugenol.

Correction factor Dissolve methyl salicylate CRS, accurately weighed, in dehydrated ethanol to prepare a solution containing 20 mg per ml as internal standard solution. Dissolve 50 mg of eugenol CRS, accurately weighed, in a 10 ml volumetric flask, accurately add 2 ml of the internal standard solution, dilute with dehydrated ethanol to volume, mix well, inject 2 μl of the solution into the column, and calculate the correction factor.

Procedure Dissolve 50 mg, accurately weighed, to a 10 ml volumetric flask, accurately add 2 ml of the internal standard solution, add dehydrated ethanol to volume, mix well, inject 2 μl into the column, and calculate the content.
It contains not less than 65.0 per cent (ml/ml) of eugenol ($C_{10}H_{12}O_2$).

Action To alleviate pain and antisepticize.

Indication Dental caries.

Usage and dosage Local use.

Storage Preserve in tightly colosed containers, stored in a cool place and protected from light.

Oleum Pogostemonis
(广藿香油，Guanghuoxiangyou)

Cablin Patch Oils

Cablin Patch Oils is the volatile oil obtained by steam distillation from Herba *Pogostemonis*.

Description A redish-brown or greenish-brown clear liquid; odour, characteristic and aromatic; taste, pungent, and slightly warm.
Freely miscible in chloroform, ether or petroleum ether.

Relative density 0.950-0.980 (Appendix Ⅶ A).

Specific optical rotation −66°-−43° (25℃), in a solution of 10 g per 100 ml in 90% ethanol (Appendix Ⅶ E).

Refractive index 1.503-1.513 (Appendix Ⅶ F).

Identification Dissolve 0.5 ml in 5 ml of ethyl acetate as the test solution. Dissolve a quantity of patchouli alcohol CRS in ethyl acetate to produce a solution containing 2 mg per ml as the reference solution. Carry out the method for thin layer chromatography (Appendix Ⅵ B), using silica gel G as the coating substance and a mixture of petroleum ether (30-60℃), ethyl acetate and glacial acetic acid (95 : 5 : 0.2) as the mobile phase. Apply separately to the plate 1-2 μl of each of the test solution and the reference resolutions. After developing and removal of the plate, dry in air, and spray with a 5% solution of ferric chloride in ethanol. A yellow spot exhibits in the chromatogram obtained with the test solution. Heat to the spot clear, the purplish-blue spot in the chromatogram obtained with the test solution corresponds in position and colour to the spot in the chromatogram obtained with the reference solution.

Insoluble matter in ethanol Dissolve 1 ml of cablin patch oils in 10 ml of 90% ethanol, shake well, the solution is clear (25℃).

Assay Carry out the method for gas chromatography (Appendix Ⅵ E)

Chromatographic system and system suitability Use 5% phenylmethyl polysiloxane (HP-5) as the stationary phase (30 m in length, 0.32 mm in diameter, 0.25 μm in film thickness). Programmed column temperature: maintain the initial column temperature at 150℃ for 23 minutes, and raise temperature to 230℃ at a speed of 8℃ per minute, and then maintain for 2 minutes. Maintain the temperature of detector at 280℃ and the sample gasifing temperature set at 280℃. The split ratio is 20 : 1. The number of the theoretical plates of the column is not less than 50000, calculated with the reference to the peak of patchouli alcohol.

Correction factor Dissolve a quantity of octadecylsilane, accurately weighed, in hexane to produce a solution containing 15 mg per ml as the internal standard solution. Dissolve 30 mg of patchouli alcohol CRS, accurately weighed, in a 10 ml volumetric flask and add accurately 1 ml of the internal standard solution, add hexane to volume, and shake well. Inject accurately 1 μl of the solution into the column, calculate the correction factor for patchouli alcohol.

Procedure Transfer 0.1 g, accurately weighed, in a 10 ml volumetric flask, add accurately 1 ml of the internal standard solution, dissolve and dilute with hexane to volume, and shake well as the test solution. Inject accurately 1 μl of the test solution into the column and calculate the contents.
It contains not less than 26.0 per cent of patchouli alcohol ($C_{15}H_{26}O$).

Action Remove turbidity with aroma, whet appetite, stop vomiting, release the exterior and eliminate *summer-heat*.

Indications Epigestric stuffiness and vomiting due to retention of *dampness* in the *middle-energizer*, lassitude due to *summer-dampess*, constriction in the chest, abdominal pain, vomiting and diarrhea due to *cold-dampness* and *summer-heat*, and headache due to nasosinusitis.

Usage and Dosage According to the dosage in each formula.

Storage Preserve in tightly closed containers, stored in a cool place and protected from light.

Packing Packed with stainless steel tins.

Oleum Rhododendri Daurici
(满山红油，Manshanhongyou)

Daurian Rhododendron Oil

Daurian Rhododendron Oil is the volatile oil obtained by steam distillation from Folium Rhododendri Daurici.

Description A pale yellowish-green to yellowish-brown clear liquid, with crystals separating out when cooled below −10℃. Odour, strongly irritant and aromatic; taste, cool and pungent.
Freely miscible with methanol, ethanol, acetone, chloroform, or ether; slightly soluble in water.

Relative density 0.935-0.950 (Appendix Ⅶ A).

Refractive index 1.500-1.520 (Appendix Ⅶ F).

Identification Dissolve 0.1 g in 5 ml of *n*-hexane, apply to a small column (1 cm in inner diameter) packed with silica gel (120-150 mesh, 3 g) by wet method, add 3 g of sodium sulfate anhydrous on the upper layer of the column, pre-elute with 50 ml of *n*-hexane, and discard the eluates. Elute with 50 ml of a mixture of *n*-hexane and ethyl acetate (50 : 1), and collect the eluates as the test solution. Dissolve a quantity of germacrone CRS in *n*-hexane to prepare a solution containing 0.5 mg per ml as the reference solution. Carry out the method for thin layer chromatography (Appendix Ⅵ B), using silica gel G as the coating substance and a mixture of *n*-hexane and ethyl acetate (14 : 1) as the mobile phase. Apply separately 10 μl of the test solution and the reference solution to the plate. After developing and removal of the plate, dry in air. Spray with vanillin sulphuric acid TS, heat at 105℃ to the spot clear. The spots in the chromatogram obtained with the test solution correspond in position and colour to the spots obtained with the reference solution.

Action To stop coughing and eliminate phlegm.

Indications Acute and chronic bronchitis.

Usage and dosage 0.05-0.1 g, 2-3 times a day.

Storage Preserve in tightly closed containers, stored in a cool place and protected from light.

Preparation Daurian Rhododendron Oil Soft Capsules.

Oleum Ricini
(蓖麻油，Bimayou)

Castor Oil

Castor Oil is the fatty oil obtained by squeezing and purification from the ripe seed of *Ricinus communis* L. (Fam. Euphorbiaceae).

Description A almost colourless or pale yellow, clear viscid liquid; odour, slight; taste, weak, then slightly pungent. Freely soluble in ethanol; freely miscible with dehydrated ethanol, chloroform, ether or glacial acetic acid.

Relative density 0.956-0.969, at 25℃ (Appendix Ⅶ A).

Refractive index 1.478-1.480 (Appendix Ⅶ F).

Acid value Not more than 2.0 (Appendix Ⅸ N).

Saponification value 176-186 (Appendix Ⅸ N).

Iodine value 82-90 (Appendix Ⅸ N).

Other oils To 1 g of the oil add 4 ml of ethanol, the solution is clear; then add 15 ml of ethanol, the solution should not be turbid.

Action To cause laxation.

Indication Constipation due to lack of intestinal fluid.

Usage and dosage 10-20 ml.

Precaution Incompatible with liposoluble anthelmintics. Contraindicated in pregnancy.

Storage Preserve in tightly closed containers, stored in a cool place and protected from light.

Oleum Sesami
(麻油，Mayou)

Sesame Oil

Sesame Oil is the fatty oil obtained by squeezing from the ripe seed of *Sesamum indicum* L. (Fam. Pedaliaceae).

Description A pale yellow or brownish-yellow, clear liquid. Odour, slight or aromatic of cooked sesame seeds; taste, weak. Freely miscible with chloroform, ether, petroleum ether or carbon disulfide; slightly soluble in ethanol.

Relative density 0.917-0.923 (Appendix Ⅶ A).

Refractive index 1.471-1.475 (Appendix Ⅶ F).

Identification To 1 ml add 10 ml of hydrochloric acid containing 0.1 g of sucrose, shake for 30 seconds, the acid layer appears pink colour, which becomes red gradually on standing.

Acid value Not more than 2.5 (Appendix Ⅸ N).

Saponification value 188-195 (Appendix Ⅸ N).

Iodine value 103-116 (Appendix Ⅸ N).

Heating test Carry out the method for heating test (Appendix Ⅸ N), using 50 ml of the oil, no precipitate is produced.

Foreign matter Not more than 0.2 per cent (Appendix Ⅸ N).

Water and volatile matter Not more than 0.2 per cent (Appendix Ⅸ N).

Action and Indications Lubricant and excipient. For relaxing the bowels and moistening the *lung* when taken orally, also used as ground substance in making ointment and plaster for external application.

Usage and dosage 17-68 ml.

Storage Preserve in tightly closed containers, stored in a cool place, and protected from light.

Oleum Terebinthinae
(松节油，Songjieyou)

Turpentine Oil

Turpentine Oil is the volatile oil obtained by distilling or extracting from the oleoresin of several species of *Pinus* (Fam. Pinaceae).

Description A colourless or pale yellow, clear liquid; odour characteristic; odour strengthened and turning yellow on long storage or exposure to air; inflammable, producing dense smoke on burning.
Freely soluble in ethanol; freely miscible with chloroform, ether or glacial acetic acid; insoluble in water.

Relative density 0.850-0.870 (Appendix Ⅶ A).

Boiling range Not less than 90.0% (ml/ml) is distilled between 154-165℃ (Appendix Ⅶ B).

Refractive index 1.466-1.477 (Appendix Ⅶ F).

Insoluble matter in ethanol Dissolve 1 ml of the oil in 7 ml of 90% ethanol with shaking, the solution is clear.

Heavy metals Carry out the limit test for heavy metals (Appendix Ⅸ E, method 2), using 1 g: Not more than 10 ppm.

Assay Carry out the method for gas chromatography (Appendix Ⅵ E).

Chromatographic system and system suitability Use 20% macrogol (PEG)-20M as the stationary phase; maintain the column temperature at 90℃. The number of theoretical plates of the column is not less than 1500, calculated with the reference to the peak of α-pinene.

Correction factor Dissolve a quantity of *n*-butyl alcohol, weigh accurately, in petroleum ether (30-60℃) to produce a solution containing 20 mg per ml as the internal solution. Weigh accurately about 30 mg of α-pinene CRS in a 10 ml brown volumetric flask, add accurately 2 ml of the internal solution, dilute with petroleum ether (30-60℃) to volume, and mix well. Inject 1 μl into the column, and calculate the correction factor.

Procedure Weigh accurately 35 mg in a 10 ml brown volumetric flask, add accurately 2 ml of the internal solution, dissolve and dilute with petroleum ether (30-60℃) to the volume, mix well, use it as the test solution, Inject 1 μl of the test solution into the column, calculate the content. It contains not less than 70.0 per cent of α-pinene ($C_{10}H_{16}$)

Action Dermerethistica.

Indications Myalgia, arthralgia.

Usage and dosage For external use, appropriate quantity of the oil for topical application.

Storage Preserve in tightly closed containers, stored in a cool place and protected from light.

Oleum Viticis Negundo (牡荆油, Mujingyou)

Negundo Chastetree Oil

Negundo Chastetree Oil is the volatile oil obtained by steam distillation from Folium Viticis Negundo.

Description A pale yellow to orange yellow, clear liquid; Odour, characteristic and aromatic; taste, slightly pungent. Freely miscible with dehydrated ethanol, chloroform or ether; practically insoluble in water.

Relative density 0.890-0.910, at 25℃ (Appendix Ⅶ A).

Refractive index 1.485-1.500 (Appendix Ⅶ F).

Identification (1) Dissolve about 0.1 g of sodium nitrite in 1-2 drops of water, add 0.3 ml of the oil and 0.5 ml of dilute sulfuric acid, mix well, the oil layer shows a jade green colour.
(2) To 1 drop of the oil add 1 ml of chloroform, mix well, add 5% solution of bromine in chloroform in dropwise, then the bromine colour of the solution disappears; continue to add 5% solution of bromine in chloroform in dropwise until the solution becomes pale yellow, a green colour is produced gradually on standing.

Fatty oil To 1 ml of the oil add 10 ml of ethanol, oil globules should not be produced on standing.

Action To eliminate phlegm, stop coughing and relieve dyspuea.

Indication Chronic bronchitis.

Usage and dosage 20-40 mg, 3 times a day.

Storage Preserve in tightly closed containers, stored in a cool place and protected from light.

Preparation Negundo Chastetree Oil Soft Capsules

Pulvis Cornus Bubali Concentratus (水牛角浓缩粉, Shuiniujiao Nongsuofen)

Buffalo Horn Concentrate

Buffalo Horn Concentrate is prepared from Cornu Bubali.

Procedure Take Cornu Bubali, wash clean, saw off, discard the horn plug, and cleave in pieces. Take the solid core part of horn tip (commonly known "Jiaojian"), macerate in 75% ethanol or sterilize with steam, and pulverize to fine powder. Take 810 g of the remained part (commonly known "Jiaozhuang"), pulverized to coarse granules or chiped into slices, decoct with 10 quantities of water 2 times, 7 to 10 hours each, and replenishing the water loss in decoction process momentarily. Combine the decoctions, filter, and concentrate to 80-160 ml. Mix well with 190 g of the fine powder of "Jiaojian", dry under 80℃, pulverize to fine powder and sift.

Description Pale greyish powder; odour, slightly stinking; taste, slightly salty.

Water Not more than 11.0 per cent (Appendix Ⅸ H, method 1).

Assay Weigh accurately 0.18 g, carry out the method for determination of nitrogen (Appendix Ⅸ L, method 1).
It contains not less than 15.0 per cent of nitrogen, calculated with reference to the dried drug.

Action and Indications As described under Corni Bubali.

Usage and dosage Taken after mixed with boiled water, 1.5-3 g, twice a day.

Storage Preserve in tightly closed containers, stored in a dry place, and protected from moisture.

MONOGRAPHS
PART Ⅲ

Traditional Chinese Patent Medicines and Simple Preparations

Aifu Nuangong Wan
(艾附暖宫丸)

Aifu Nuangong Pills

Ingredients Folium Artemisiae Argyi (carbonized) 120 g; Rhizoma Cyperi (processed with vinegar) 240 g; Fructus Evodiae (processed) 80 g; Cortex Cinnamomi 20 g; Radix Angelicae Sinensis 120 g; Rhizoma Chuanxiong 80 g; Radix Paeoniae Alba (stir-baked with wine) 80 g; Radix Rehmanniae 40 g; Radix Astragali Praeparata Cum Melle 80 g; Radix Dipsaci 60 g.

Procedure Pulverize the above ten ingredients to fine powder, sift and mix well. To each 100 g of powder add 110-130 g of refined honey to make small honeyed pills or big honeyed pills.

Description Dark brown to black small honeyed pills or big honeyed pills; odour, slight; taste, sweet, then bitter and pungent.

Identification (1) Microscopical: T-shaped hairs brown or black, curved; stalk 2～4-celled, Non glandular hair 4～6-celled, some containing brownish-red contents. Glandular hairs with a multicellular, ellipsoidal head, containing brownish-yellow to brownish-red contents, and a 2～6-celled stalk. Secretory cells subrounded, containing pale yellowish-brown to reddish-brown secretion, surrounded by radially arranged cells. Parenchymatous cells fusiform, with slightly thickened walls and very fine oblique crisscross striations. Clusters of calcium oxalate 45 μm in diameter, occurring in pale brownish-yellow shrunken parenchymatous cells, often arranged in rows. Fibres 15-35 μm in diameter, with thickened and slightly lignified walls, and large rounded pits. Fibres in bundles or scattered, with thickened walls, and showing longitudinal fissures on the surface, both ends broken to broom-like or relatively truncate. Stone cells subsquare or subrounded, walls thin at one side.

(2) To 9 g of the pills, cut into pieces, add 20 ml of ether, ultrasonicate for 20 minutes, and filter. Evaporate the filtrate to dryness, dissolve the residue in 0.5 ml of *n*-hexane as the test solution. Dissolve α-cyperone CRS in *n*-hexane to produce a solution containing 2 μl per ml as the reference solution. Carry out the method for thin layer chromatography (Appendix Ⅵ B), using silica gel GF_{254} as the coating substance and a mixture of benzene and ethyl acetate (19∶1) as the mobile phase. Apply separately 20 μl of the test solution and 10 μl of the reference solution to the plate. After developing and removal of the plate, dry it in air, examine under ultraviolet light at 254 nm. The dark blue spot in the chromatogram obtained with the test solution corresponds in position and colour to the spot in the chromatogram obtained with the reference solution. Spray with a solution of dinitrophenylhydrazine TS, allow to stand for a while, the spots turn orange-red gradually.

(3) Heat under reflux 4.5 g of the pills, cut into pieces, with 10 ml of ethanol for 1 hour, allow to cool, filter, and use the filtrate as the test solution. Prepare a solution with 0.2 g of Fructus Evodiae reference drug as the reference drug solution in the same manner. Carry out the method for thin layer chromatography (Appendix Ⅵ B), using silica gel G as the coating substance and the upper layer of a mixture of *n*-butanol, acetic acid and water (2∶1∶1) as the mobile phase. Apply separately 10 μl each of the above two solutions to the plate. After developing and removal of the plate, dry in air, examine under ultraviolet light at 365 nm. The fluorescent spots in the chromatogram obtained with the test solution correspond in position and colour to the spots in the chromatogram obtained with the reference drug solution.

(4) Macerate 9 g of the pills, cut into pieces, in 5 ml of water, add 30 ml of *n*-butanol saturated with water, shake well, and ultrasonicate for 10 minutes, filter, and evaporate the filtrate to dryness. Dissolve the residue in 2 ml of ethanol as the test solution. Dissolve paeoniflorin CRS in ethanol to produce a solution containing 2 mg per ml as the reference solution. Carry out the method for thin layer chromatography (Appendix Ⅵ B), using silica gel G as the coating substance and a mixture of chloroform, ethyl acetate, methanol and formic acid (40∶5∶10∶0.2) as the mobile phrase. Apply separately 5-10 μl of each of the two solutions to the plate. After developing and removal of the plate, dry it in air, spray with 5% vanillin in sulfuric acid, and heat to the spots clear. The spot in the chromatogram obtained with the test solution correspond in position and colour to the spot in chromatogram obtained with the reference solution.

(5) Macerate 9 g of the pills, cut into pieces, in 5 ml of water, add 30 ml of *n*-butanol saturated with water, shake well, and ultrasonicate for 10 minutes, filter, wash the filtrate with two 30-ml quantities of ammonia TS, discard the ammonia washings, evaporate the *n*-butanol extract to dryness. Dissolve the residue in 1 ml of ethanol as the test solution. Dissolve astragaloside Ⅳ CRS in ethanol to produce a solution containing 0.5 mg per ml as the reference solution. Carry out the method for thin layer chromatography (Appendix Ⅵ B), using silica gel G as the coating substance and the lower layer of a mixture of chloroform, methanol and water (13∶7∶2) as the mobile phase. Apply separately 10 ml of the test solution and 5 μl of the reference solutions to the plate. After developing and removal of the plate, dry in air, spray with 5% vanillin in sulfuric acid, heat at 110℃ for about 10 minutes, and examine under ultraviolet light at 365 nm. The spot in the chromatogram obtained with the test solution corresponds in position and colour to the spot in the chromatogram obtained with the reference solution.

Other requirements Comply with the general requirements for pills (Appendix Ⅰ A).

Assay Carry out the method for high performance liquid chromatography (Appendix Ⅵ D).

Chromatographic system and system suitability Use octadecylsilane bonded silica gel as the stationary phase and a mixture of acetonitrile and 0.1% phosphoric acid (12∶88) as the mobile phase. As detector a spectrophotometer set at 230 nm. The number of theoretical plates of the column is not less than 3000, calculated with the reference to the peak of paeoniflorin.

Reference solution Dissolve a quantity of paeoniflorin CRS, accurately weighed, in 50% methanol to prepare a solution containing 50 μg per ml as the reference solution.

Test solution Cut the small honeyed pills or the big honeyed pills, obtained under the test of weight variation, into pieces, weigh accurately 2 g, in a stopper conical flask, add accurately 25 ml of 50% methanol, stopper well, and weigh. Ultrasonicate (power 300 W, frequence 50 kHz) for 40 minutes, cool, weigh again, replenish the loss weight with 50% methanol, shake well, filter and use the successive filtrate as the test solution.

Procedure Inject accurately 10 μl of each of the reference solution and the test solution into the column, respectively, calculate the content.

It contains not less than 0.45 mg per gram of the small honeyed pills, 4.0 mg per big honeyed pill, of paeoniflorin ($C_{23}H_{28}O_{11}$), referred to Radix Paeoniae Alba.

Action To regulate *qi* and nourishing blood, and warm the

uterus and regulate menstruation.

Indications Irregular menstruation and dysmenorrhea due to blood deficiency, *qi* stagnation and *cold* in the *lower-energizer* with manifestations of delayed menstrual cycle, scanty menstrual blood with clots, pain in the lower abdomen, lower abdominal cold pain, alleviated by warmth, aching pain of lower back and knee.

Usage and dosage 9 g of small honeyed pills or 1 big honeyed pill, 2-3 times a day.

Strength 9 g per big honeyed pill

Storage Preserve in tightly closed containers.

Angong Niuhuang San (安宫牛黄散)

Angong Niuhuang Powder

Ingredients Calculus Bovis 100 g; Pulvis Cornus Bubali Concentratus 200 g; Moschus 25 g; Margarita 50 g; Cinnabaris 100 g; Realgar 100 g; Rhizoma coptidis 100 g; Radix Scutellariae 100 g; Fructus Gardeniae 100 g; Radix Curcumae 100 g; Borneolum Syntheticum 25 g.

Procedure Levigate or pulverize Cinnabaris, levigate Margarita and Realgar respectively to very fine powder. Pulverize Rhizoma Coptidis, Radix Scutellariae, Fructus Gardeniae and Radix Curcumae to fine powder. Triturate Calculus Bovis, Pulvis Cornus Bubali Concentratus, Moschus and Borneolum Syntheticum with the above powder, sift and mix well.

Description A yellow to yellowish-orange powder; odour, strongly aromatic; taste, bitter.

Identification (1) Microscopical: Irregular fragments greyish-white or greyish-yellow, somewhat lustrous, with greyish-brown pigment granules and irregular longitudinal clefts on the surface. Irregular fragments colourless or pale green, translucent, lustrous, some times fine and dense sinuous striations visible. Irregular fine granules dark brownish-red, lustrous, with dark black edge. Irregular fragments yellow or orange-yellow, lustrous. Fibre bundles bright yellow, with slightly thickened and distinctly pitted walls. Stone cells bright yellow. Phloem fibres pale yellow, fusiform, with thickened walls and fine pit-canals. Stone cells of pericarp subrounded or polygonal, 17-31 μm in diameter, thick-walled, containing prisms of calcium oxalate. Mass of aleurone almost colourless.

(2) Heat under reflux 2 g of the powder, with 20 ml of ethanol for 1 hour, cool and filter, use the filtrate as the test solution. Dissolve cholic acid CRS in ethanol to produce a solution containing 1 mg per ml as the reference solution. Carry out the method for thin layer chromatography (Appendix Ⅵ B), Using silica gel G as the coating substance and a mixture of ether, chloroform and glacial acetic acid (2∶2∶1) as the mobile phase. Apply separately 10 μl of each of the above two solutions to the plate. After developing and removal of the plate, dry in air. Spray with 10% phosphomolybdic acid in ethanol and heat at 105℃ for about 10 minutes to the spots clear. The spot in the chromatogram obtained with the test solution corresponds in position and colour to the spot in the chromatogram obtained with the reference solution.

(3) Dissolve separately berberine hydrochloride CRS and baicalin CRS in ethanol to produce two solutions containing 0.2 mg of berberine hydrochloride CRS and 0.5 mg of baicalin CRS per ml respectively as the reference solutions. Carry out the method for thin layer chromatography (Appendix Ⅵ B), using silica gel G mixed with a solution of 4% sodium acetate as the coating substance and a mixture of ethyl acetate, butanone, formic acid and water (10∶7∶1∶1) as the mobile phase. Apply in stripe separately 20 μl of the test solution obtained under Identification test (2) and 10 μl of each of the above two reference solutions to the plate. After developing and removal of the plate, dry in air. The stripe in the chromatogram obtained with the test solution corresponds in position and colour to the stripe in the chromatogram obtained with the reference solution of baicalin CRS. Examine under ultraviolet light at 365 nm, the fluorescent stripe in the chromatogram obtained with the test solution corresponds in position and colour to the stripe in the chromatogram obtained with the reference solution of berberine hydrochloride CRS.

(4) To 1 g of the powder, add 5 ml of ethyl acetate, ultrasonicate for 15 minutes, allow to cool, centrifuge, use the supernatant as the test solution. Dissolve a mixture of (±) borneol and (±)-isoborneol CRS in ethyl acetate to produce a mixture containing 1 mg per ml as the reference solution. Carry out the method for the thin layer chromatography (Appendix Ⅵ B), using silica G as the coating substance and a mixture of toluene and acetone (9∶1) as the mobile phase. Apply separately 3 μl of each of the test solution and the reference solution to the plate. Spray 5% vanilin in sulfuric acid and heat at 105℃ to the spots clear. The spots in the chromatogram obtained with the test solution correspond in position and colour to the spots in the chromatogram obtained with the reference solution.

(5) Carry out the method for the determination of volatile oil (Appendix Ⅹ D). To 3 g of the powder, add 0.5 ml of cyclohexane, heat gently to boil and keep boiling for 2.5 hours. Allow to stand for half an hour, use the cyclohexane solution as the test solution. Dissolve muscone CRS in benzene to produce a solution containing 2.5 mg per ml as the reference solution. Carry out the method for gas chromatography (Appendix Ⅵ E), using a 2 m long column packed with 9% phenylmethyl polysiloxane (OV-17) as the stationary phase, and maintain the column temperature at 210℃. Inject a quantity of each of the test solution and the reference solution respectively into the column. The peak in the chromatogram obtained with the test solution corresponds in retention time to the peak in the chromatogram obtained with the reference solution.

Other requirements Complies with the general requirements for powder (Appendix Ⅰ B).

Action To clear *heat* and *toxins*, and relieve convulsion and resuscitate.

Indications Febrile disease, invasion of the pericardium by pathogenic factors, convulsion due to high fever, coma and delirium; coma in stroke, encephalitis, cerebral meningitis, toxic encephalopathy, cerebral hemorrhage and septicemia with above symptoms.

Usage and dosage 1.6 g (1 bottle), once a day; 0.4 g (1/4 bottle) for children under 3 years of age; 0.8 g (1/2 bottle) for children of 4-6 years of age; or follow doctor's advice.

Precaution Be cautious about pregnant women.

Strength 1.6 g per bottle

Storage Preserve in tightly closed containers.

Angong Niuhuang Wan
(安宫牛黄丸)

Angong Niuhuang Pills

Ingredients Calculus Bovis 100 g; Pulvis Cornus Bubali Concentratus 200 g; Moschus 25 g; Margarita 50 g; Cinnabaris 100 g; Realgar 100 g; Rhizoma Coptidis 100 g; Radix Scutellariae 100 g; Fructus Gardeniae 100 g; Radix Curcumae 100 g; Borneolum Syntheticum 25 g.

Procedure Levigate or pulverize Cinnabaris, levigate Margarita and Realgar to very fine powders respectively. Pulverize Rhizoma Coptidis, Radix Scutellariae, Fructus Gardeniae and Radix Curcumae to fine powder. Triturate Calculus Bovis, Pulvis Cornus Bubali Concentratus, Moschus and Borneolum Syntheticum with the above powders, sift and mix well. Add a quantity of refined honey to make 600 big honeyed pills, or coated with gold.

Description Yellowish-orange to reddish-brown big honeyed pills, or gold coated big honeyed pills; odour, strongly aromatic; taste, slightly bitter.

Identification (1) Microscopical: Irregular fragments greyish-white or greyish-yellow, somewhat lustrous, with greyish-brown pigment granules and irregular longitudinal clefts on the surface. Irregular fragments colourless or pale green, translucent, lustrous, some times fine and dense sinuous striations visible. Irregular fine granules dark brownish-red, lustrous, with dark black edge. Irregular fragments yellow or orange-yellow, lustrous. Fibre bundles bright yellow, with slightly thickened and distinctly pitted walls. Stone cells bright yellow. Phloem fibres pale yellow, fusiform, with thickened walls and fine pit-canals. Stone cells of pericarp subrounded or polygonal, 17-31 μm in diameter, thick-walled, containing prisms of calcium oxalate. Mass of aleurone almost colourless.

(2) Heat under reflux 2 g of the pills, cut into pieces, with 20 ml of ethanol for 1 hour, cool and filter, use the filtrate as the test solution. Dissolve cholic acid CRS in ethanol to produce a solution containing 1 mg per ml as the reference solution. Carry out the method for thin layer chromatography (Appendix Ⅵ B), using silica gel G as the coating substance and a mixture of ether, chloroform and glacial acetic acid (2∶2∶1) as the mobile phase. Apply separately 10 μl of each of the above two solutions to the plate. After developing and removal of the plate, dry in air. Spray with 10% phosphomolybdic acid in ethanol and heat at 105 ℃ for about 10 minutes. to the spots clear. The spot in the chromatogram obtained with the test solution corresponds in position and colour to the spot in the chromatogram obtained with the reference solution.

(3) Dissolve separately berberine hydrochloride CRS and baicalin CRS in ethanol to produce two solutions containing 0.2 mg of berberine hydrochloride and 0.5 mg of baicalin per ml respectively as the reference solutions. Carry out the method for thin layer chromatography (Appendix Ⅵ B), using silica gel G mixed with a solution of 4% sodium acetate as the coating substance and a mixture of ethyl acetate, butanone, formic acid and water (10∶7∶1∶1) as the mobile phase. Apply in stripe separately 20 μl of the test solution obtained under Identification test (2) and 10 μl of each of the above two reference solutions to the plate. After developing and removal of the plate, dry in air. The stripe in the chromatogram obtained with the test solution corresponds in position and colour to the stripe in the chromatogram obtained with the reference solution of baicalin CRS. Examine under ultraviolet light at 365 nm, the fluorescent stripe in the chromatogram obtained with the test solution corresponds in position and colour to the stripe in the chromatogram obtained with the reference solution of berberine hydrochloride CRS.

(4) Cut 1.5 g of the pills into pieces, add 5 ml of ethyl acetate, ultrasonicate for 15 minutes, allow to cool, centrifuge, use the supernatant as the test solution. Dissolve (－) borneol CRS and (±)-isoborneol CRS in ethyl acetate to produce a mixture containing 1 mg per ml as the reference solution. Carry out the method for the thin layer chromatography (Appendix Ⅵ B), using silica G as the coating substance and a mixture of toluene and acetone (9∶1) as the mobile phase. Apply separately 3 μl of each of the test solution and the reference solution to the plate. Spray 5% vanilin in sulfuric acid and heat at 105℃ to the spots clear. The spots in the chromatogram obtained with the test solution correspond in position and colour to the spots in the chromatogram obtained with the reference solution.

(5) Carry out the method for the determination of volatile oil (Appendix Ⅹ D). Cut 3 g of the pills into small pieces, add 0.5 ml of cyclohexane, heat gently to boil and keep boiling for 2.5 hours. Allow to stand for half an hour, use the cyclohexane solution as the test solution. Dissolve muscone CRS in cyclohexane to produce a solution containing 2.5 mg per ml as the reference solution. Carry out the method for gas chromatography (Appendix Ⅵ E), using a 2 m long column packed with 9% phenylmethyl polysiloxane (OV-17) as the stationary phase, and maintain the column temperature at 210 ℃. Inject a quantity of each of the test solution and the reference solution respectively into the column. The peak in the chromatogram obtained with the test solution corresponds in retention time to the peak in the chromatogram obtained with the reference solution.

Acid-insoluble ash To 1 g of the pills, recovered the coats, cut into pieces, weigh accurately, carry out the method for the determination of ash (Appendix Ⅸ K), not more than 1.0%.

Other requirements Comply with the general requirements for pills (Appendix Ⅰ A).

Action To clear *heat* and *toxins*, and relieve convulsion and resuscitate.

Indications Febrile disease, invasion of the pericardium by pathogenic factors, convulsion due to high fever, coma and delirium; coma in stroke, encephalitis, cerebral meningitis, toxic encephalopathy, cerebral hemorrhage and septicemia with above symptoms.

Usage and dosage 1 pill, once a day; 1/4 pill for children under 3 years of age; 1/2 pill for children of 4-6 years of age; or follow doctor's advice.

Precaution Be cautious about pregnant women.

Strength 3 g per pill

Storage Preserve in tightly closed containers.

Ankun Zanyu Wan
(安坤赞育丸)

Ankun Zanyu Pills

Ingredients Rhizoma Cyperi (processed with vinegar) 96 g; Cornu Cervi Pantotrichum 24 g; Colla Corii Asini 24 g; Placenta Hominis 20 g; Radix Paeoniae Alba 16 g; Radix Angelicae Sinensis 16 g; Radix Achyranthis Bidentatae 14 g; Radix Cyathulae 14 g; Radix Glehniae 12 g; Myrrha

(processed with vinegar) 12 g; Radix Asparagi 11.5 g; Fructus Psoraleae(processed with salt)11 g; Arillus Longan 10 g; Poria 8 g; Cortex Phellodendri Chinensis 8 g; Carapax et Plastrum Testudinis 8 g; Herba Cynomorii 8 g; Cortex Eucommiae(processed with salt)8 g; Radix Gentianae Macrophyllae 8 g; Carapax Trionycis(processed with vinegar)8 g; Folium Artemisiae Argyi (carbonized) 8 g; Radix Cynanchi Atrati 8 g; Rhizoma Corydalis(processed with vinegar)8 g; Fructus Corni(processed with wine)8 g; Cauda Cervi 7.5 g; Fructus Lycii 6 g; Flos Celosiae Cristatae 6 g; Radix Astragali 6 g; Olibanum (processed with vinegar) 6 g; Halloysitum Rubrum (calcined) 6 g; Colla Cornus Cervi 6 g; Semen Cuscutae 4 g; Herba Cistanches (processed with wine) 6 g; Caulis Spatholobi 4 g; Herba Taxilli 4 g; Succinum 4 g; Radix et Rhizoma Glycyrrhizae Cum Melle 4 g; Radix et Rhizoma Ginseng 2 g; Radix Linderae 3 g; Silk Floss (carbonized) 2 g; Crinis Carbonisatus 2 g; Rhizoma Atractylodis Macrocephalae (stir-baked with bran) 24 g; Stigma Croci 0.8 g; Radix Rehmanniae 16 g; Fructus Amomi 24 g; Lignum Aquilariae Resinatum 13 g; Semen Ziziphi Spinosae (stir-baked) 16 g; Radix Dipsaci 10 g; Pericarpium Citri Reticulatae 14 g; Exocarpium Citri Rubrum 8 g; Rhizoma Chuanxiong 12 g; Rhizoma Alismatis 8 g; Radix Scutellariae 10 g; Herba Artemisiae Annuae 6 g; Radix Polygalae(processed)8 g; Semen Myristicae (roasted in ash) 6 g; Rhizoma Ligustici 6 g; Flos Carthami 4 g; Radix Bupleuri 6 g; Radix Aucklandis 2 g; Folium Perillae 5 g; Radix Rehmanniae Praeparata 16 g; Radix et Rhizoma Salviae Miltiorrhizae 2 g.

Procedure Pulverize Rhizoma Atractylodis Macrocephalae, Fructus Amomi, Radix Rehmanniae, Semen Ziziphi Spinosae, Lignum Aquilariae Resinatum, Pericarpium Citri Reticulatae, Radix Dipsaci, Rhizoma Chuanxiong, Exocarpium Citri Rubrum, Radix Scutellariae, Rhizoma Alismatis, Radix Polygalae, Herba Artemisiae Annuae, Rhizoma Ligustici, Semen Myristicae, Radix Bupleuri, Flos Carthami, Folium Perillae, Radix Aucklandis, Radix Salviae Miltiorrhizae and Radix Rehmanniae Preparata to coarse powder. Fill the other 42 ingredients in a jar, add 400 g of yellow wine, cover closely with a lid, place the jar in a pressure-resistant container, heat or stew over water till the wine completely absorbed. Take out the drugs, mix well with the above coarse powder, dry, pulverize to fine powder, sift and mix well. To each 100 g of the powder add 110-130 g of refined honey to make big honeyed pills.

Description Black big honeyed pills; taste, sweet and slightly bitter.

Identification Microscopical: Irregularly branched masses colourless, dissolved in chloral hydrate TS; hyphae colourless or pale brown, 4-6 μm in diameter. Fibre bundles bright yellow, surrounded by cells containing prisms of calcium oxalate, forming crystal fibres; walls of the crystal cells thickened and lignified. Parenchyma greyish-brown to blackish-brown, cells mostly shrunken, each containing a brown nucleus-like mass. Rubber threads stripe-shaped or twisted into masses, surface granular. Fibre bundles surrounded by parenchymatous cells containing prisms of calcium oxalate, forming crystal fibres. Bast fibres pale yellow, spindle-shaped, walls thickened, with fine pit-canals. Fibres in bundles or scattered, walls thickened, surface with longitudinal fissures, both ends broken into broom-like or relatively truncate. Sclerenchymatous cells of endopleura yellowish-brown or brownish-red, subpolygonal in surface view; walls thickened; lumen containing silica body. Testa stone cells pale yellow, with thicked and sinuous walls; striations well-defined. Secretory cells subrounded, containing pale yellowish-brown to reddish-brown secretion, the surrounding cells arranged stellately. Pollen grains subrounded or ellipsoidal, up to 60 μm in diameter, extine spinous and with 3 germinal apertures. Needle crystals of calcium oxalate fine, 10-32 μm long, irregularly filling in parenchymatous cells. Endopleura cells brownish-yellow, rectangular or subsquare in surface view, anticinal walls beadedly thickened. Stone cells rectangular or long stripe-shaped, 50-110 μm in diameter, with dense and very fine pits.

Other requirements Comply with the general requirements for pills (Appendix I A).

Action To replenish *qi* and nourish blood, reinforce the liver and kidney and regulate the function of them.

Indications Menstrual disorders, metrorrhagia or metrostaxis and leukorrheal disease due to a deficiency of both *qi* and blood, deficiency in the liver and kidney, with manifestations of oligomenorrhea, or dribbling of menstrual blood, delayed menstrual cycle, lassitude, weakness and aching in the lower back and legs and leukorrhagia.

Usage and dosage 1 pill, twice a day.

Precaution Follow doctor's order in pregnancy.

Strength 9 g per pill

Storage Preserve in tightly closed containers.

Anshen Bunaoye (安神补脑液)

Anshen Bunao Mixture

Ingredients Cornu Cervi Pantotrichum; Radix Polygoni Multiflori Praeparata Cum Succo Glycines Sotae; Herba Epimedii; Rhizoma Zingiberis; Radix et Rhizoma Glycyrrhizae; Fructus Jujubae; Vitamin B_1.

Procedure Distil volatile oil of Rhizoma Zingiberis, to the residue of distillation, add Radix Polygoni Multiflori Praeparata Cum Succo Glycines Sotae, Herba Epimedii, Fructus Jujubae and Radix et Rhizoma Glycyrrhizae, decoct with water three times. Combine the decoctions, filter, concentrate the filtrate to a quantity, precipitate with a quantity of ethanol, filter, keep the filtrate for latter use. Decoct Cornu Cervi Pantotrichum with water five times, filter separately, combine the filtrate, concentrate and add fengla, allow to stand to fengla solidified completely, discard the solid, filter, precipitate with a quantity of ethanol, filter. Recover ethanol, add a quantity of water and ethanol, adjust to a quantity concentration. Mix well the above solution, decoction of Cornu Cervi Pantotrichum and syrupus simplex, add the volatile oil of Rhizoma Zingiberis, Vitamin B_1, benzoic acid, sodium benzoate and ethyl benzoate, stir well, allow to stand to clear, filter, add water to 1000 ml.

Description A yellow or brownish-yellow liquid; odour, aromatic; taste, sweet and pungent.

Identification (1) Shake 5 ml with 2.5 ml of sodium hydroxide TS, 0.5 ml of potassium ferricyanide TS, and 5 ml of *n*-butanol thoroughly for 2 minutes. Allow to stand, examine under ultraviolet light at 365 nm. A blue fluorescence is produced in the *n*-butanol layer. Add acid to acidic, the fluorescence vanished which returned when alkaline.

(2) Extract 30 ml of the oral liquid with two 20-ml quantities of ether. Combine the water layer, extract with two 30-ml quantities of *n*-butanol saturated with water. Combine the *n*-butanol solution, evaporate to dryness, and dissolve the residue in 1 ml of methanol as the test solution.

To 0.25 g of Radix Polygoni Multiflori Praeparata reference drug, add 20 ml of ethanol, heat under reflux for 1 hour, filter, concentrate the filtrate to about 3 ml as the reference drug solution. Dissolve 2,3,5,4'-tetrahydroxystilbene-2-O-β-D-glucoside CRS in methanol to produce a solution containing 0.5 mg per ml as the reference solution. Carry out the method for thin layer chromatography (Appendix Ⅵ B), using silica gel G as the coating substance and the mixture of benzene, acetone and methanol (6∶2∶1) as the mobile phase. Apply separately 3 μl of the three solutions to the plate. After developing and removal of the plate, dry in air. Spray with phosphomolybdic acid in sulfuric acid solution (dissolve 2 g of phosphomolybdic acid in 20 ml of water, add 30 ml of sulfuric acid slowly, shake well) and heat slightly. The spots in the chromatogram obtained with the test solution correspond in position and colour to the spots in the chromatogram obtained with the reference drug solution and the reference solution.

pH value 3.0-5.0 (Appendix Ⅷ G).

Other requirements Comply with the general requirements for mixtures (Appendix Ⅰ J).

Assay Carry out the method for high performance liquid chromatography (Appendix Ⅵ D).

Chromatographic system and system suitability Use octadecylsilane bonded silica gel as the stationary phase and acetonitrile-water (25∶75) as the mobile phase. As detector a spectrophotometer set at 270 nm. The number of theoretical plates for the column is not less than 2500, calculated with the reference to the peak of icariine.

Reference solution Dissolve a quantity of icariine CRS, accurately weighed, in methanol to produce a solution containing 0.1 mg per ml as the reference solution.

Test solution Measure accurately 20 ml of the mixture in a separating funnels, extract with two 15-ml quantities of ether, discard the ether solutions, extract the water solution with five 15-ml quantities of ethyl acetate. Combine the ethyl acetate solutions, evaporate to dryness, and dissolve the residue in methanol and transfer to a 5 ml volumetric flask, add methanol to volume, mix well and filter. Use the successive filtrate as the test solution.

Procedure Inject accurately 5 μl of each of the reference solution and the test solution into the column and calculate the content.

It contains not less than 30 μg of icariine ($C_{33}H_{40}O_{15}$) per ml, referred to Herba Epimedii.

Action To generate essence to reinforce marrow, and replenish *qi* and nourish blood.

Indications Dizziness, lassitude, amnesia due to insufficient *kidney-essence* and consumption of *qi* and blood; neurasthenia with above symptoms.

Usage and dosage 10 ml, twice a day.

Strength (1) 10 ml per phial (2) 100 ml per bottle

Storage Preserve in tightly closed containers.

Anshen Buxin Wan
(安神补心丸)

Anshen Buxin Pills

Ingredients Radix et Rhizoma Salviae Miltiorrhizae 300 g; Fructus Schisandrae Chinensis (steamed) 150 g; Rhizoma Acori Tatarinowii 100 g; Decoctum Tranquilizici Concentratum 560 g.

Procedure Pulverize Radix et Rhizoma Salviae Miltiorrhizae, Fructus Schisandrae Chinensis and Rhizoma Acori Tatarinowii to fine powder. Mix Decoctum Tranquilizici Concentratum with the above fine powder according to the quantities specified in the recipe. Make pills, dry, polish, or coat with sugar.

Description Dark brown concentrated watered pills or sugar-coated concentrated watered pills with dark brown core; taste, astringent, slightly sour.

Identification (1) Microscopical: Bordered pitted vessels 29-48 μm in diameter, with fine and dense bordered pits. Stone cells of epidermis of testa pale yellowish-brown, subpolygonal in surface view, walls thickened, with fine and dense pit-canals, containing dark brown contents. Oil cells rounded, up to 50 μm in diameter, containing yellow or yellowish-brown oily substances.

(2) Grind well 4 g of the pills, add 20 ml of petroleum ether (30-60℃), ultrasonicate for 20 minutes, and filter. Evaporate the filtrate to dryness. Dissolve the residue in 0.5 ml of petroleum ether (30-60℃) as the test solution. Prepare a solution with 1 g of Radix et Rhizoma Salviae Miltiorrhizae reference drug as the reference drug solution in the same manner. Dissolve tanshinone ⅡA CRS in petroleum ether (30-60℃) to produce a solution containing 2 mg per ml as the reference solution. Carry out the method for thin layer chromatography (Appendix Ⅵ B), using silica gel G as the coating substance and a mixture of benzene and ethyl acetate (19∶1) as the mobile phase. Apply separately 5 μl of each of the above three solutions to the plate. After developing and removal of the plate, dry in air. The spots in the chromatogram obtained with the test solution correspond in position and colour to the spots in the chromatogram obtained with the reference drug solution and the reference solution.

(3) Dissolve deoxyschizandrin CRS in petroleum ether (30-60℃) to produce a solution containing 2 mg per ml as the reference solution. Carry out the method for thin layer chromatography (Appendix Ⅵ B), using silica gel GF_{254} as the coating substance and the upper layer of the mixture of petroleum ether (30-60℃), ethyl formate and formic acid (15∶5∶1) as the mobile phase. Apply separately 1 μl of each of the reference solution and the test solution obtained under Identification test (2) to the plate. After developing and removal of the plate, dry in air. Examine under ultraviolet light at 254 nm. The spot in the chromatogram obtained with the test solution corresponds in position and colour to the spot in the chromatogram obtained with the reference solution.

(4) Grind well 4 g of the pills, in the flask, add 100 ml of water, distill and collect the distillate 50 ml, extract with three 20-ml quantities of petroleum ether (60-90℃), combine the extract and evaporate to dryness. Dissolve the residue in 1 ml of ethyl acetate as the test solution. Prepare a solution of 1 g of Rhizoma Acori Tatarinowii reference drug in the same manner as the reference drug solution. Carry out the method for the thin layer chromatography (Appendix Ⅵ B), using silica gel G mixed with sodium carboxymethyl cellulose as the coating substance and a mixture of petroleum ether (60-90℃) and ethyl acetate (4∶1) as the mobile phase. Apply separately 10-20 μl of the test solution and 1 μl of the reference drug solution to the plate. After developing and removal of the plate, dry in air. Expose to iodine vapour until the spots clear. The spots in the chromatogram obtained with the test solution correspond in the position and colour to the spots in the chromatogram obtained with the reference drug solution.

Other requirements Comply with the general requirements for pills (Appendix Ⅰ A).

Assay Carry out the method for high performance liquid

chromatography (Appendix Ⅵ D).

Chromatographic system and system suitability Use octadecylsilane bonded silica gel as the stationary phase, a mixture of methanol and water (50 : 50) as the mobile phase. As detector a spectrophotometer set at 250 nm. The number of theoretical plates of the column is not less than 6000, calculated with the reference to the peak of schisandrin.

Reference solution Dissolve a quantity of schisandrin CRS, accurately weighed, in methanol to prepare a solution containing 20 μg per ml as the reference solution.

Test solution Weigh accurately 30 pills, pulverized (remove the coating substance for the sugar-coated concentrated watered pills) to fine powder and mix well. To 1 g, weigh accurately, add accurately 50 ml of methanol, weigh, ultrasonicate (power 250 W, frequency 20 kHz) for 30 minutes, allow to stand to room temperature, weigh again and replenish the lost weight with methanol. Mix thoroughly, filter and use the successive filtrate as the test solution.

Procedure Inject accurately 10 μl of each of the reference solution and the test solution into the column, and calculate the content.
It contents not less than 70 μg of schisandrin ($C_{24}H_{32}O_7$) per pill, referred to Fructus Schisandrae Chinensis.

Action To nourish the heart to anchor the mind.

Indications Palpitation, dreamfulness, dizziness and tinnitus due to a deficiency of *heart-blood* and *fire* blazing within in a deficiency syndrome.

Usage and dosage 15 pills, 3 times a day.

Strength 2 g per 15 pills

Storage Preserve in tightly closed containers.

Attached:

Decoctum Tranquilizici Concentratum
安神膏

Ingredients Cortex Albiziae 300 g; Semen Cuscutae 300 g; Herba Ecliptae 300 g; Caulis Polygoni Multiflori 500 g; Radix Rehmanniae 200 g; Concha Margaritifera 2000 g; Fructus Ligustri Lucidi (steamed) 400 g.

Procedure Decoct the above seven ingredients with water twice, 3 hours for the first time and 1 hour for the second. Combine the decoctions, filter and concentrate the filtrate to a thin extract with relative density of 1.21 (80-85℃).

Anshen Jiaonang
(安神胶囊)

Anshen Capsules

Ingredients Semen Ziziphi Spinosae (stir-baked) 40 g; Rhizoma Chuanxiong 47 g; Rhizoma Anemarrhenae 112 g; Radix Ophiopogonis 92 g; Radix polygoni Multiflori Praeparata Cum Succo Glycines Sotae 32 g; Fructus Schisandrae Chinensis 97 g; Radix et Rhizoma Salviae Miltiorrhizae 130 g; Poria 97 g.

Procedure Pulverize Semen Ziziphi Spinosae and Fructus Schisandrae Chinensis to fine powder. Decoct Rhizoma Chuanxiong and other five ingredients with water twice, 3 hours for the first time and 2 hours for the second time, filter, combine the filtrate, concentrate to thick extract, dry under low temperature and pulverize to powder. Mix well with the above powder, make granules, make to 1000 of capsules.

Description Hard capsules, containing brownish-yellow to dark brown granules; odour, aromatic; taste, slight.

Identification (1) Place 20 capsules of the contents, pulverize to fine powder, add 30 ml of chloroform, ultrasonicate for 30 minutes, filter, evaporate the filtrate to dryness, dissolve the residue in 1 ml of chloroform as the test solution. Prepare a solution of 1 g of Fructus Schisandrae Chinensis reference drug in the same manner as the reference drug solution. Dissolve deoxyschisandrin CRS in chloroform to produce a solution containing 1 mg per ml as the reference solution. Carry out the method for thin layer chromatography (Appendix Ⅵ B), using silica gel GF_{254} as the coating substance and the mixture of petroleum ether (30-60℃), ethyl formate and formic acid (15:5:1) as the mobile phase. Apply separately 2 μl of each of the three solutions to the plate. After developing and removal of the plate, dry in air, examine under ultraviolet light at 254 nm. The spots in the chromatogram obtained with the test solution correspond in position and colour to the spots in the chromatogram obtained with the reference drug solution and the reference solution.
(2) To 1 g of Rhizoma Chuanxiong reference drug in 20 ml of chloroform, ultrasonicate for 10 minutes, and filter, evaporate the filtrate to dryness, dissolve the residue in 1 ml of chloroform as the reference drug solution. Carry out the method for thin layer chromatography (Appendix Ⅵ B), using silica gel G as the coating substance and the mixture of petroleum ether and ethyl acetate (1 : 1) as the mobile phase. Apply separately 2 μl of the above test solution obtained in Identification (1) and the reference drug solutions to the plate. After developing and removal of the plate, dry in air, examine under ultraviolet light at 365 nm. The spots in the chromatogram obtained with the test solution correspond in position and colour to the spots in the chromatogram obtained with the reference drug solution.

Other requirements Comply with the general requirements for capsules (Appendix Ⅰ L).

Assay Carry out the method for high performance liquid chromatography (Appendix Ⅵ D).

Chromatographic system and system suitability Use octadecylsilane bonded silica gel as the stationary phase and the mixture of methanol and water (58:42) as the mobile phase. As detector a spectrophotometer set at 250 nm, the number of theoretical plates for the column is not less than 9000, calculated with the reference to the peak of schisandrin.

Reference solution Dissolve a quantity of schisandrin CRS, accurately weighed, in methanol to produce a solution containing 30 μg per ml as the reference solution.

Test solution Weigh accurately 1 g of the content, obtained under the test of weight variation, pulverized to fine powder, to a stopper conical flask. Add accurately 25 ml of the mixture of chloroform and methanol (2 : 1), stopped tightly, weigh accurately, ultrasonicate (power 250 W, frequency 25 kHz) for 40 minutes, cool, weigh accurately, add the mixed solution of chloroform-methanol (2:1) to the original weight, mix well and filter. Discard the initial filtrate, and use the successive filtrate as the test solution.

Procedure Inject accurately 10 μl of each of the reference solution and the test solution into the column and calculate the content.

It contains not less than 0.20 mg of schisandrin ($C_{24}H_{32}O_7$) per capsule, referred to Fructus Schisandrae Chinensis.

Action To nourish *yin*, reinforce blood and the heart to anchor the mind.

Indication Insomnia, dreamfulness, palpitation, feverish sensation in the palms, soles and chest, night sweats and tinnitus due to insufficient *yin-blood*.

Usage and dosage 4 capsules, 3 times a day.

Strength 0.32 g per capsule

Storage Preserve in tightly closed containers.

Anwei Pian
(安胃片)
Anwei Tablets

Ingredients Rhizoma Corydalis (processed with vinegar) 63 g; Alumen (calcined) 250 g; Endoconcha Sepiae 187 g.

Procedure Pulverize the above three ingredients to fine powder, sift and mix well. Make granules with 125 g of honey and a quantity of water, dry, compress into 1000 tablets.

Description Whitish to yellowish tablets; odour, slight; taste, astringent and slightly bitter.

Identification (1) Pulverize 5 tablets to fine powder, heat under reflux with 20 ml of ethanol on a water bath for 10-15 minutes, allow to cool and filter, apply the filtrate to a piece of filter paper, dry in air and examine under ultraviolet light at 365 nm; a yellowish-green fluorescence is produced.
(2) Pulverize 2 tablets to fine powder, in a test tube, add 10 ml of dilute hydrochloric acid TS, it effervesces and evolves carbon dioxide, which produces a white precipitate on introducing into calcium hydroxide TS. Filter the acidic solution in the test tube. Transfer 3 ml of the filtrate, alkalize slightly with ammonia TS, a white colloid precipitate is produced, which is soluble in hydrochloric acid TS, acetic acid TS or in an excess of sodium hydroxide TS. To the filtrate add 2 drops of ammonium oxalate TS, a white precipitate is produced, which is soluble in hydrochloric acid, but insoluble in acetic acid.
(3) Place 2 tablets, in fine powder, in a small beaker, add 10 ml of water, stir thoroughly and filter. To 2 ml of the filtrate add 2 drops of barium chloride TS, a white precipitate is produced, which is insoluble in hydrochloric acid or nitric acid. To another 2 ml of the filtrate add 2 drops of sodium cobaltinitrite TS; a yellow precipitate is produced.

Other requirements Comply with the general requirements for tablets (Appendix Ⅰ D).

Action To promote *qi* and blood circulation, and arrest gastric acid and kill pain.

Indications Stabbing pain in the stomach, belching, acid regurgitation and epigastric fullness due to stagnation of qi and blood; gastroduodenal ulcer, chronic gastritis with above symptoms.

Usage and dosage 5-7 tablets, 3-4 times a day.

Storage Preserve in tightly closed containers.

Anyang Jingzhi Gao
(安阳精制膏)
Anyang Jingzhi Plaster

Ingredients Radix Aconiti 24 g; Radix Aconiti Kusnezoffii 24 g; Radix Linderae 24 g; Radix Ampelopsis 24 g; Radix Angelicae Dahuricae 24 g; Rhizoma Bletillae 24 g; Semen Momordicae 24 g; Caulis Akebiae 24 g; Fructus Chaenomelis 24 g; Rhizoma Sparganii 24 g; Rhizoma Curcumae 24 g; Radix Angelicae Sinensis 24 g; Radix Paeoniae Rubra 24 g; Cortex Cinnamomi 24 g; Radix et Rhizoma Rhei 48 g; Fructus Forsythiae 48 g; Sanguis Draconis 10 g; Resina Ferulae 10 g; Olibanum 6 g; Myrrha 6 g; Catechu 6 g; Mentholum 8 g; Methyl Salicylate 8 g; Borneolum Syntheticum 8 g.

Procedure Pulverize Sanguis Draconis, Olibanum, Myrrha, Resina Ferulae and Catechu to coarse powder, use 90% ethanol to make a liquid extract with a relative density of 1.05; after cooling, add Mentholum, Methyl Salicylate and Borneolum Syntheticum and mix well. Decoct the other 16 ingredients with water 3 times, 3 hours for the first and the second, 2 hours for the third; combine the decoctions, filter and concentrate the filtrate to a thin extract with a relative density of 1.25-1.30 (80℃), combine with the above liquid extract and mix well. Additionally add in 8.5-9.0 times quantity of plaster base made from rubber and rosin etc. to form adhesive matter. Spread the adhesive matter on the tape, cover with liner, and cut into small pieces.

Description Slightly red pieces of rubber plaster; odour, aromatic.

Identification Place 10 pieces to a 250 ml flask, add 150 ml of water, connect to an apparatus for the determination of volatile oil. Add water through the top of the apparatus until the graduated tube is filled and overflows to the flask, then add 5 ml of ethyl acetate and connect to the reflux condenser. Heat under reflux for 40 minutes. Transfer the liquid from the apparatus to a separator, filter the ethyl acetate solution through a funnel laid with anhydrous sodium sulfate, and use the filtrate as the test solution. Dissolve 8 mg of menthol CRS, 8 mg of a mixture of (±)-borneol and (±)-isoborneol CRS and 8 mg of methyl salicylate CRS in 10 ml of ethanol as the reference solution. Carry out the method for gas chromatography (Appendix Ⅵ E), using a 2 m long column packed with 10% polyethylene glycol (PEG)-20 M as the stationary phase, maintain the column temperature at 130℃. Inject a quantity of each of the reference solution and the test solution respectively into the column, the retention times of the peaks obtained with the test solution and the reference solution are concordant with each other.

Plaster content Carry out the determination method of plaster content for cataplasms (Appendix Ⅰ I, method 1), use ether as the solvent, not less than 1.7 g per 100cm^2.

Other requirements Complies with the general requirements for cataplasms (Appendix Ⅰ D).

Action To disintegrate masses, expel stagnated blood to kill pain, relax muscles and tendons and promote blood circulation, and expel and disperse cold.

Indications Abdominal masses, rheumatalgia due to *wind*, *cold* or *dampness*, cold and pain in the stomach and numbness of hands and feet.

Usage and dosage Apply to the lesion.

Precaution Avoid foods that are not easily digested when it is prescribed for abdominal masses.

Strength 8 cm×9.5 cm

Storage Preserve in well closed containers, store in a cool place.

Anzhong Pian
(安中片)

Anzhong tablets

Ingredients Ramulus Cinnamomi 180 g; Rhizoma Corydalis (processed with vinegar) 180 g; Concha Ostreae (calcined) 180 g; Fructus Foeniculi 120 g; Fructus Amomi 120 g; Rhizoma Alpiniae Officinarum 60 g; Radix et Rhizoma Glycyrrhizae 120 g.

Procedure Pulverize 36 g of Ramulus Cinnamomi and 72 g of Concha Ostreae to fine powder, take 80 g and the remained portion for latter use. Carry out the method for percolation described under liquid extract and extract (Appendix Ⅰ O), percolate Rhizoma Corydalis with 70% ethanol, collect the percolates, recover ethanol to produce a liquid extract for later use. Distill Fructus Foeniculi, Fructus Amomi, Rhizoma Alpiniae Officinarum and the remained un-powdered Ramulus Cinnamomi with water to get the volatile oil. Combine the residue, the remained powder of Ramulus Cinnamomi and Concha Ostreae, Radix et Rhizoma Glycyrrhizae and the aqueous solution after distillation, and decoct three times. Combine the decoctions, filter, concentrate it to 1000 ml, allow to stand, filter, combine the filtrates and the liquid extract of Rhizoma Corydalis, and concentrate to a thick extract. Add the previously prepared fine powder of Ramulus Cinnamomi and Concha Ostreae to the thick extract, mix well, dry, triturate, add a quantity of sucrose powder and starch, mix well, make into granules, dry, add the volatile oil, mix well, and make to 2500 tablets; or add a quantity of adjuvant, mix well, make into granules, dry, add the volatile oil, mix well, make to 1000 tablets, and coat with film.

Description Pale brown tablets or film coated tablets with pale brown core; odour, aromatic; taste, slightly sweet, bitter, and astringent.

Identification (1) Microscopical: Stone cells scattered or in group. Colourless to brown, subsquare or long-rectangular, 30-64 μm in diameter, thin walled at one side. Irregular pieces colourless or pale yellowish-brown, with fine striations on surface.

(2) Grind 40 tablets or 16 film coated tablets to fine powder, ultrasonicate with 30 ml of ether for 20 minutes. Filter, evaporate the filtrate to dryness, and dissolve the residue in 1 ml of ethyl acetate as the test solution. Dissolve cinnamaldehyde CRS in ethyl acetate to prepare a solution containing 1 μl per ml as the reference solution. Carry out the method for thin layer chromatography (Appendix Ⅵ B), using silica gel G as the coating substance and a mixture of petroleum ether (60-90℃) and ethyl acetate (17∶3) as the mobile phase. Apply separately 10-15 μl of the test solution and 2 μl of the reference solution to the plate. After developing and removal of the plate, spray with alcoholic dinitrophenyl hydrazine TS. The spot in chromatogram obtained with the test solution corresponds in position and colour to the spot in the chromatogram obtained with the reference solution.

(3) Grind 15 tablets or 6 film coated tablets to fine powder, ultrasonicate with 30 ml of methanol for 30 minutes and filter. To the filtrate add 5 g of neutral alumina, shake for several minutes, filter, and evaporate the filtrate to dryness. Dissolve the residue in water, alkalify with concentrated ammonia TS, partition with three 10-ml quantities of ether, combine the ether extracts, and evaporate to dryness. Dissolve the residue in 1 ml of methanol as the test solution. Dissolve tetrahydropalmatine CRS in methanol to prepare a solution containing 1 mg per ml as the reference solution. Carry out the method for thin layer chromatography (Appendix Ⅵ B), using silica gel G as the coating substance and a mixture of hexane, chloroform, methanol and diethyl amine (10∶6∶1∶0.1) as the mobile phase. Apply separately to the plate 5 μl of each of the two solutions. After developing and removal of the plate, expose to iodine vapour to the spots clear, evaporate the adsorbed iodine and examine under ultraviolet light at 365 nm. The fluorescent spot in chromatogram obtained with the test solution corresponds in position and colour to the spot in the chromatogram obtained with the reference solution.

Other requirements Comply with the general requirements for tablets (Appendix Ⅰ D).

Volatile ether extractives Take 20 tablets, or film-coated tablets with coating removed, weigh accurately, grind well, weigh accurately 2 g, carry out the method for determination of volatile ether extractives (Appendix Ⅹ A), using ether as the solvent, and calculate the content.

It contains not less than 0.35 mg per tablet, 0.80 mg per film-coated tablet, of the volatile ether extractives.

Assay Carry out the method for high performance liquid chromatography (Appendix Ⅵ D).

Chromatographic system and system suitability Use octadecylsilane bonded silica gel as the stationary phase and a mixture of methanol, 0.2 mol/L ammonium acetate solution and glacial acetic acid (68∶32∶1) as the mobile phase. As detector a spectrophotometer set at 252 nm. The number of theoretical plates of the column is not less than 2000, calculated with the reference to the peak of glycyrrhizic acid.

Reference solution Dissolve a quantity of ammonium glycyrrhizinate CRS, accurately weighed, in mobile phase to prepare a solution containing 100 μg per ml as the reference solution (correspond to 97.95 μg of glycyrrhizinic acid per ml).

Test solution Weigh accurately 20 tablets, or film-coated tablets with coating removed, grind well, weigh accurately 1 g in a stoppered conical flask, add accurately 10 ml of the mobile phase, stopper tightly and weigh. Ultrasonicate (power 300 W, frequency 33 kHz) for 30 minutes, cool, weigh again, replenish the loss of weight with the mobile phase, and shake well. Filter and use the successive filtrate as the test solution.

Procedure Inject accurately 10 μl of each of the reference solution and the test solution into the column, respectively, and calculate the content.

It contains not less than 0.80 mg per tablet, 2.0 mg per film-coated tablet, of glycyrrhizinic acid ($C_{42}H_{62}O_{16}$), referred to Radix et Rhizoma Glycyrrhizae.

Action To warm the *middle-energizer* to expel cold, regulate *qi* flow to kill pain, and regulate the stomach to arrest vomiting.

Indications A deficiency of *yang* and *cold* in the stomach with manifestations of prolonged stomachache, aversion to cold and preference for warmth, vomiting of watery fluid, lassitude and cold limbs; chronic gastritis and gastroduodenitis with above symptoms.

Usage and dosage 4-6 tablets or 2-3 film-coated tablets, 2-3 tablets or 1-1.5 film-coated tablets for children, 3 times a

day, or follow doctor's advice.

Precaution Contraindicated for patients with acute gastritis and hemorrhagic ulcer.

Strength 1 g per tablet, 0.2 g per film-coated tablet

Storage Preserve in tightly closed containers.

Awei Huapi Gao
(阿魏化痞膏)

Awei Huapi Plaster

Ingredients Rhizoma Cyperi 20 g; Cortex Magnoliae Officinalis 20 g; Rhizoma Sparganii 20 g; Rhizoma Curcumae 20 g; Radix Angelicae Sinensis 20 g; Radix Aconiti Kusnezoffii (not prepared) 20 g; Radix Aconiti (not prepared) 20 g; Bulbus Allii 20 g; Fructus Quisqualis 20 g; Radix Angelicae Dahuricae 20 g; Squama Manis 20 g; Semen Momordicae 20 g; Catharsius 20 g; Rhizoma Picrorhizae 20 g; Radix et Rhizoma Rhei 20 g; Semen Ricini 20 g; Olibanum 3 g; Myrrha 3 g; Aloe 3 g; Sanguis Draconis 3 g; Realgar 15 g; Cortex Cinnamomi 15 g; Camphora 15 g; Resina Ferulae 20 g.

Procedure Levigate Realgar to very fine powder. Pulverize Olibanum, Myrrha, Aloe, Sanguis Draconis and Cortex Cinnamomi to fine powder. Triturate all the powders, sift and mix well. Crush all the other ingredients except Resina Ferulae and Camphora into small pieces, deep-fry with 2400 g of edible vegetable oil, discard the residue, filter, concentrate the oily filtrate until it condenses to pills on dripping. Add 750-1050 g of Plumbi Oxydum Rubrum to the above oil, stir and make plaster, and soak the plasters in water. Melt the plaster by gentle heating, add the above powders, Resina Ferulae and Camphora, stir well and spread on the cloth.

Description A black plaster spread on the cloth.

Other requirements Complies with the requirements for plasters (Appendix Ⅰ P).

Action Relieve stuffiness and disintegrate masses.

Indications Abdominal masses, epigastric and abdominal pain, fullness in the chest and hypochondria due to stagnation of *qi* and blood.

Usage and dosage Apply it to the umbilicus or lesion after being softened with heat.

Precaution Contraindicated in pregnancy.

Strength 6 g or 12 g per piece of plaster

Storage Preserve in well closed containers, store in a cool and dry place.

Babao Kunshun Wan
(八宝坤顺丸)

Babao Kunshun Pills

Ingredients Radix Rehmanniae Praeparata 80 g; Radix et Rhizoma Rehmanniae 80 g; Radix Paeoniae Alba 80 g; Radix Angelicae Sinensis 80 g; Rhizoma Chuanxiong 80 g; Radix et Rhizoma Ginseng 40 g; Rhizoma Atractylodis Macrocephalae 80 g; Poria 80 g; Radix et Rhizoma Glycyrrhizae 40 g; Herba Leonuri 40 g; Radix Scutellariae 80 g; Radix Achyranthis Bidentatae 40 g; Exocarpium Citri Rubrum 80 g; Lignum Aquilariae Resinatum 40 g; Radix Aucklandiae 16 g; Fructus Amomi 40 g; Succinum 40 g.

Procedure Pulverize the above seventeen ingredients to fine powder, sift, and mix well. To each 100 g of the powder add 110-130 g of refined honey to make big honeyed pills.

Description Blackish-brown big honeyed pills; taste, slightly bitter.

Identification (1) Microscopical: Irregular branched masses colourless, dissolved in chloral hydrate TS, hyphae colourless or pale brown, 4-6 μm in diameter. Parenchyma greyish-brown to blackish-brown, cells mostly shrunken, each containing a brown nucleus-like mass. Parenchymatous cells fusiform, with slightly thickened walls and very fine oblique crisscross striations. Prisms of calcium oxalate abundant in parenchyma. Clusters of calcium oxalate 18-32 μm in diameter, scattered in parenchymatous cells, often in rows or several clusters in one cell. Needle crystals of calcium oxalate fine, 10-32 μm long, irregularly filling in parenchymatous cells. Fibre bundles surrounded by parenchymatous cells containing prisms of calcium oxalate, forming crystal fibres. Bast fibres yellowish, fusiform, with thickened walls and minute pit-canals. Spiral vessels 8-23 μm in diameter, with thickened walls connected each other, like reticulated spiral vessels. Sclerenchymatous cells of endotesta yellowish-brown or brownish-red, subpolygonal in surface view, walls thickened, lumen containing silica body. Non-glandular hairs 1～3-celled, slightly curved, with warty walls.

(2) To 18 g of the pills, cut into pieces, add 100 ml of dehydrated ethanol, heat under reflux for 2 hours, cool, and filter. Evaporate the filtrate to dryness and dissolve the residue in 30 ml of water, add sodium chloride to form a saturated solution, stir thoroughly, and filter. Extract the filtrate with two 15-ml quantities of *n*-butanol saturated with water, combine the *n*-butanol extracts and evaporate to dryness. Dissolve the residue in 1 ml of dehydrated ethanol, add a quantity of neutral alumina, stir well on a water bath, dry, and apply to a small column previously packed with neutral alumina (200-mesh, 1 g, 10-15 mm in internal diameter). Pre-elute with 30 ml of a mixture of ethyl acetate and methanol (3∶1) and discard the eluate. Elute with 30 ml of a mixture of ethyl acetate and methanol (1∶1), collect the eluate and evaporate to dryness, dissolve the residue in 0.5 ml of ethanol as the test solution. Dissolve paeoniflorin CRS in ethanol to produce a solution containing 2 mg per ml as the reference solution. Carry out the method for thin layer chromatography (Appendix Ⅵ B), using silica gel G as the coating substance and a mixture of chloroform, ethyl acetate, methanol and formic acid (40∶5∶10∶1) as the mobile phase. Apply separately 4 μl of each of the above two solutions to the plate. After developing and removal of the plate, dry in air. Spray with 5% vanillin in sulfuric acid and heat to the spots clear. The spot in the chromatogram obtained with the test solution corresponds in position and colour to the spot in the chromatogram obtained with the reference solution.

(3) Grind well 6 g of the pills with 4 g of kieselguhr, add 30 ml of ether, ultrasonicate for 10 minutes and filter. Evaporate the filtrate to dryness and dissolve the residue in 15 ml of water, add hydrochloric acid to adjust to pH 1-2, extract with two 20-ml quantities of ethyl acetate. Evaporate the ethyl acetate extracts to dryness and dissolve the residue in 2 ml of methanol as the test solution. Dissolve baicalin CRS in methanol to produce a solution containing 1 mg per ml as the reference solution. Carry out the method for the thin layer chromatography (Appendix Ⅵ B), using silica gel G as the coating substance and a mixture of ethyl acetate, butanone, formic acid and water (5∶3∶1∶1) as the mobile phase. Apply separately 4 μl of each of the two solutions to the plate. After developing and removal of the plate, dry in

air, spray with 5% ferric chloride in ethanol. The spot in the chromatogram obtained with the test solution corresponds in position and colour to the spot in the chromatogram obtained with the reference solution.
(4) To 3 g of the pills, cut into pieces, add 40 ml of ether, heat under reflux for 30 minutes and filter. Evaporate the filtrate to dryness and dissolve the residue in 2 ml of the ethyl acetate as the test solution. To 1 g of each of Radix Angelicae Sinensis reference drug and Rhizoma Chuanxiong reference drug, add respectively 25 ml of ether, prepare two solutions in the same manner as the reference drug solution. Carry out the method for the thin layer chromatography (Appendix Ⅵ B), using silica G as the coating substance and the mixture of *n*-hexane and ethyl acetate (9∶1) as the mobile phase. Apply separately 4 μl of each of the above three solutions to the plate. After developing and removal of the plate, dry in air. Examine under ultraviolet light at 365 nm. The fluorescent spots in the chromatogram obtained with the rest solution correspond in position and colour to the spots in chromatogram obtained with the reference drug solutions.

Other requirements Comply with the general requirements for pills (Appendix Ⅰ A).

Assay Carry out the method for high performance liquid chromatography (Appendix Ⅵ D).

Chromatographic system and system suitability Use octadecylsilane bonded silica gel as the stationary phase, a mixture of methanol and 0.05 mol/L disodium hydrogen phosphate solution [add 0.05 mol/L potassium dihydrogen phosphate solution to adjust to pH 7.4] (15∶85) as the mobile phase. As detector a spectrophotometer set at 230 nm. The number of theoretical plates of the column is not less than 2700, calculated with the reference to the peak of paeoniflorin.

Reference solution Dissolve a quantity of paeoniflorin CRS, accurately weighed, in methanol to prepare a solution containing 30 μg per ml as the reference solution.

Test solution Cut the pills obtained under the test of weight variation, into pieces, mix well. To about 2 g, weighed accurately, add accurately 50ml of 70% methanol, weigh, heat under reflux for 30 minutes, allow to stand to room temperature, weigh again and replenish the lost weight with 70% methanol, filter. Apply accurately 25 ml of the successive filtrate to a neutral alumina column (100-200 mesh, 1 cm in internal diameter, packed with 2 g of neutral alumina by 50% methanol). Wash with 50% methanol, collect the eluate to a 50 ml volumetric flask until almost to volume, add 50% methanol to volume, mix well, as the reference solution.

Procedure Inject accurately 10 μl of the reference solution and 10-15 μl of the test solution into the column, and calculate the content.
It contents not less than 2.6 mg of paeoniflorin ($C_{23}H_{28}O_{11}$) per pill, referred to Radix Paeoniae Alba.

Action To replenish *qi* and nourish blood to regulate menstruation.

Indications Menstrual disorders and dysmenorrhea due to a deficiency of *qi* and blood with manifestations of delayed menstrual cycle with scanty menstrual blood and pain during periods.

Usage and dosage 1 pill, twice a day.

Strength 9 g per pill

Storage Preserve in tightly closed containers.

Baidai Wan
(白带丸)

Baidai Pills

Ingredients Cortex Phellodendri Chinensis (stir-baked with wine) 150 g; Cortex Ailanthi 300 g; Radix Paeoniae Alba 100 g; Radix Angelicae Sinensis 100 g; Rhizoma Cyperi (processed with vinegar) 50 g.

Procedure Pulverize Cortex Phellodendri Chinensis, Radix Paeoniae Alba, Radix Angelicae Sinensis and Rhizoma Cyperi to fine powder, sift and mix well. Decoct Cortex Ailanthi twice with water, combine the decoctions, filter and concentrate the filtrate to a quantity (keep a part of it for coating). Make pills with the above powder, the concentrated decoction and a quantity of water, coat the pills with the reserved concentrated decoction, dry and polish.

Description Brownish-black watered pills; taste, bitter.

Identification (1) Microscopical: Fibre bundles bright yellow, surrounded by cells containing prisms of calcium oxalate, forming crystal fibres; crystal cells with lignified and thickened walls. Clusters of calcium oxalate 18-32 μm in diameter, occurring in parenchymatous cells, often arranged in rows or several in one cell. Parenchymatous cells fusiform, with a slightly thickened walls and very fine oblique crisscross striations. Secretory cells subrounded, containing pale yellowish-brown to reddish-brown secretion, surrounded by radially arranged cells.
(2) To 5 g of the pills, finely powdered, add 5 ml of ethanol, macerate for 1 hour with constantly shaking, filter, evaporate the filtrate to dryness. Dissolve the residue in 0.5 ml of ethanol as the test solution. Dissolve paeoniflorin CRS in ethanol to produce a solution containing 1 mg per ml as the reference solution. Carry out the method for thin layer chromatography (Appendix Ⅵ B), using silica gel G as the coating substance and a mixture of chloroform, ethyl acetate, methanol and formic acid (40∶5∶10∶0.2) as the mobile phase. Apply separately 3-5 μl of the test solution and 5 μl of the reference solution to the plate. After developing in a chamber pre-equilibrated with the mobile phase for 15 minutes and removal of the plate, dry in air. Spray with 5% vanillin in sulfuric acid and heat to the spots clear. The spot in the chromatogram obtained with the test solution corresponds in position and colour to the spot in the chromatogram obtained with the reference solution.
(3) To 2 g of the powdered pills, add 5 ml of methanol, ultrasonicate for 10 minutes, and filter. Dilute the filtrate with methanol to 5 ml as the test solution. Prepare a solution with 0.1 g of Cortex Phellodendri Chinensis reference drug in the same manner as the reference drug solution. Dissolve berberine hydrochloride CRS in methanol to produce a solution containing 0.5 mg per ml as the reference solution. Carry out the method for thin layer chromatography (Appendix Ⅵ B), using silica gel G as the coating substance and a mixture of benzene, ethyl acetate, isopropanol, methanol and concentrated ammonia TS (12∶6∶3∶3∶1) as the mobile phase. Apply separately 1-2 μl of each of the above three solutions to the plate. After developing in a chamber pre-equilibrated with ammonia vapour for 15 minutes and removal of the plate, dry in air, and examine under ultraviolet light at 365 nm. The fluorescent spots in the chromatogram obtained with the test solution correspond in position and colour to the spots in the chromatograms obtained with the reference drug solution and the reference solution.

Other requirements Comply with the general requirements for pills (Appendix I A).

Assay Carry out the method for high performance liquid chromatography (Appendix VI D).

Chromatographic system and system suitability Use octadecylsilane bonded silica gel as the stationary phase, a mixture of acetonitrile and 0.05 mol/L potassium dihydrogen phosphate solution [add sodium hydroxide TS to adjust to pH 5.0] (25 : 75) as the mobile phase. As detector a spectrophotometer set at 346 nm. The number of theoretical plates of the column is not less than 3000, calculated with the reference to the peak of berberine hydrochloride.

Reference solution Dissolve a quantity of berberine hydrochloride CRS, accurately weighed, in methanol to prepare a solution containing 25 μg per ml as the reference solution.

Test solution Triturate a quantity of the pills to fine powder and mix well. To about 0.2 g of the powder, weighed accurately, add accurately 25 ml of a mixture of methanol and hydrochloric acid (1 : 100), weigh, heat under reflux for 30 minutes, allow to stand to room temperature, weigh again and replenish the lost weight with a mixture of methanol and hydrochloric acid (1 : 100). Mix well, filter and use the successive filtrate as the test solution.

Procedure Inject accurately 10 μl each of the reference solution and the test solution in to the column, and calculate the content.

It contents not less than 1.5 mg of berberine hydrochloride ($C_{20}H_{18}ClNO_4$) per gram, referred to Cortex Phellodendri Chinensis.

Action To clear *heat*, eliminate *dampness*, and arrest leukorrhagia.

Indications Leukorrheal disease due to pouring of *damp-heat* with manifestation of leukorrhagia with bad smell, yellow in colour.

Usage and dosage 6 g, twice a day.

Storage Preserve in well closed containers, protected from moisture.

Baihe Gujin Wan
(百合固金丸)

Baihe Gujin Pills

Ingredients Bulbus Lilii 100 g; Radix Rehmanniae 200 g; Radix Rehmanniae Praeparata 300 g; Radix Ophiopogonis 150 g; Radix Scrophulariae 80 g; Bulbus Fritillariae Cirrhosae 100 g; Radix Angelicae Sinensis 100 g; Radix Paeoniae Alba 100 g; Radix Platycodonis 80 g; Radix et Rhizoma Glycyrrhizae 100 g.

Procedure Pulverize the above ten ingredients to fine powder, sift and mix well. To each 100 g of the powder add 20-30 g of refined honey and a quantity of water to make water-honeyed pills and dry. Alternatively, add 70-90 g of refined honey to make big honeyed pills.

Description Blackish-brown water-honeyed pills or big honeyed pills; taste, slightly sweet.

Identification (1) Microscopical: Anastomosing laticiferous tubes 14-25 μm in diameter, containing yellowish granular contents. Stone cells yellowish-brown or colourless, subrectangular, subrounded or irregular, striation well-defined up to about 94 μm in diameter. Clusters of calcium oxalate 18-32 μm in diameter, occurring in parenchymatous cells, often arranged in rows or several in one cell. Fibre bundles surrounded by parenchymatous cells containing prisms of calcium oxalate, forming crystal fibre. Parenchyma greyish-brown to blackish-brown, cells mostly shrunken, each containing a brown nucleus-like mass.

(2) Take 9 g of the big honeyed pills, cut into pieces and soften with a small quantity of warm water, grind well with 9 g of kieselguhr, and dry overnight in a desiccator; or pulverize 6 g of the water-honeyed pills. Add 40 ml of *n*-hexane, ultrasonicate for 30 minutes, and filter. Evaporate the filtrate to dryness and dissolve the residue in 0.5 ml of *n*-hexane as the test solution. Prepare a solution with 1 g of Radix Angelicae Sinensis reference drug and 20 ml of *n*-hexane in the same manner as the reference drug solution. Carry out the method for thin layer chromatography (Appendix VI B), using silica gel G as the coating substance and a mixture of *n*-hexane and ethyl acetate (9 : 1) as the mobile phase. Apply separately 1 μl of the test solution and 2 μl of the reference drug solution to the plate. After developing and removal of the plate, dry in air. Examine under ultraviolet light at 365 nm. The major fluorescent spots in the chromatogram obtained with the test solution correspond in position and colour to the spots in the chromatogram obtained with the reference drug solution.

(3) Pulverize 13 g of the water honeyed pills to powder; or cut 18 g of the big honeyed pills into pieces. Add 80 ml of water to, stand to disintegrate, heat on a water bath for 2 hours, allow to cool, centrifuge for 10 minutes, separate the supernatant, add 2 ml of hydrochloric, and heat on a water bath for 1 hour, allow to cool. Extract with two 30-ml quantities of chloroform, combine the extracts and concentrate to 1 ml as the test solution. Prepare a solution with 1 g of Radix Ophiopogonis reference drug and 50 ml of water as the reference drug solution in the same manner. Carry out the method for thin layer chromatography (Appendix VI B), using silica gel G as the coating substance and a mixture of chloroform and acetone (4 : 1) as the mobile phase. Apply separately 2 μl of each of the above two solutions to the plate. After developing and removal of the plate, dry in air. Spray with 10% sulfuric acid in ethanol and heat at 105℃ to visualize clearly. The spots in the chromatogram obtained with the test solution correspond in position and colour to the spots in the chromatogram obtained with the reference drug solution.

(4) Expel the solvent from the drug residue obtained under Identification test (2), add 40 ml of ethanol, ultrasonicate for 30 minutes, and filter. Evaporate the filtrate to dryness, and dissolve the residue in 15 ml of water. Extract under shaking with three 15-ml quantities of *n*-butanol saturated with water. Combine the *n*-butanol solutions, wash with three 15-ml quantities of water saturated with *n*-butanol. Evaporate the *n*-butanol solution to dryness, dissolve the residue in 0.5 ml of methanol, add a small quantity of neutral alumina, stir well on a water bath, dry and apply to a previously prepared column packed with neutral alumina (200-300 mesh, 1 g, 1-1.5 cm in internal diameter), elute with 50 ml of methanol. Collect the eluate and evaporate to dryness, dissolve the residue in 0.5 ml of methanol as the test solution. Prepare a solution with 1 g of Radix et Rhizoma Glycyrrhizae reference drug and 40 ml of ethanol as the reference drug solution in the same manner. Carry out the method for thin layer chromatography (Appendix VI B), using silica gel G prepared with 1% sodium hydroxide solution as the coating substance and a mixture of toluene, ethyl acetate and methanol (7 : 3 : 1) as the mobile phase. Apply separately 1 μl of the test solution and 0.5 μl of the reference drug solution to the plate. After developing and removal of the plate, dry in air. Examine under ultraviolet light at 365 nm. The major fluorescent spots in the

chromatogram obtained with the test solution correspond in position and colour to the spots in the chromatogram obtained with the reference drug solution.

Other requirements Comply with the general requirements for pills (Appendix Ⅰ A).

Assay Carry out the method for high performance liquid chromatography (Appendix Ⅵ D).

Chromatographic system and system suitability Use octadecylsilane bonded silica gel as the stationary phase, a mixture of acetonitrile and water (11∶89) as the mobile phase. As detector a spectrophotometer set at 230 nm. The number of theoretical plates of the column is not less than 2000, calculated with the reference to the peak of paeoniflorin.

Reference solution Dissolve a quantity of paeoniflorin CRS, accurately weighed, in dilute ethanol to prepare a solution containing 50 μg per ml as the reference solution.

Test solution Pulverize the water honeyed pills to powder. To about 0.8 g, accurately weighed; or cut the big honeyed pills obtained under the test of weigh variation, into pieces and mixed well. To about 1 g, weigh accurately, in the stopper. conical flask add accurately 25 ml of dilute ethanol TS, stopper well, weigh and stand for a night. Ultrasonicate (power 300W, frequency 50 kHz) for 40 minutes. allow to stand to room temperature, weigh again and replenish the lost weight with dilute ethanol. Mix thoroughly, filter and use the successive filtrate as the test solution.

Procedure Inject accurately 10 μl of the reference solution and 10-20 μl of the test solution into the column, and calculate the content.

It contents not less than 0.54 mg of paeoniflorin ($C_{23}H_{28}O_{11}$) per gram for water honeyed pills, and 3.5 mg for each big honeyed pills, referred to Radix Paeoniae Alba.

Action To nourish *yin* and moisten the lung, and resolve phlegm and stop coughing.

Indications Dry cough with expectoration of scanty phlegm or blood-flecked phlegm, and painful dry throat due to *yin* deficiency in the lung and kidney.

Usage and dosage 6 g of water-honeyed pills or 1 big honeyed pill, twice day.

Strength 9 g per big honeyed pill

Storage Preserve in tightly closed containers.

Baihe Gujin Wan (Nongsuowan) (百合固金丸，浓缩丸)

Baihe Gujin concentrated pills

Ingredients Bulbus Lilii 100 g; Radix Rehmanniae 200 g; Radix Rehmanniae Praeparata 300 g; Radix Ophiopogonis 150 g; Radix Scrophulariae 80 g; Bulbus Fritillariae Cirrhosae 100 g; Radix Angelicae Sinensis 100 g; Radix Paeoniae Alba 100 g; Radix Platycodonis 80 g; Radix et Rhizoma Glycyrrhizae 100 g.

Procedure Pulverize Radix Angelicae Sinensis, Bulbus Fritillariae Cirrhosae, Radix Platycodonis and 50 g of Radix et Rhizoma Glycyrrhizae to fine powder. Decoct Radix Rehmanniae and Radix Rehmanniae Praeparata with water three times, 2 hours for first time, 2 hours for second time, 1 hour for third time. Combine the decoctions, filter and concentrate to a thick extract with relative density of 1.30-1.35 (20℃). Decoct the remains of Radix et Rhizoma Glycyrrhizae, Radix Ophiopogonis, Bulbus Lilii, Radix Scrophulariae, Radix Paeoniae Alba with water two times, 3 hours for first time, 2 hours for second time. Combine the decoctions, filter and concentrate to a thick extract with relative density of 1.30-1.35 (20℃). Mix the above thick extract and powder well, make pills, dry and polish.

Description Brown to dark brown concentrated watered pills; taste, sweet, slightly bitter.

Identification (1) Microscopical: Fibre bundles surrounded by parenchymatous cells containing prisms of calcium oxalate, forming crystal fibre. The simple granules of starch granules broad ovoid of or conchoids, 40-60 μm in diameter, hila short slit-shaped of U-shaped, and striated.

(2) Take 5 g of the pills, pulverize to powder. Add 40 ml of *n*-hexane, ultrasonicate for 30 minutes, and filter. Evaporate the filtrate to dryness and dissolve the residue in 0.5 ml of *n*-hexane as the test solution. Prepare a solution with Radix Angelicae Sinensis reference drug and 20 ml of *n*-hexane as the reference drug solution in the same manner. Carry out the method for thin layer chromatography (Appendix Ⅵ B), using silica gel G as the coating substance and a mixture of *n*-hexane and ethyl acetate (9∶1) as the mobile phase. Apply separately 1 μl of the test solution and 2 μl of the reference drug solution to the plate. After developing and removal of the plate, dry in air. Examine under ultraviolet light at 365 nm. The fluorescent spots in the chromatogram obtained with the test solution correspond in position and colour to the spots in the chromatogram obtained with the reference drug solution.

(3) Expel the solvent from the drug residue obtained under Identification test (2), add 40 ml of ethanol, ultrasonicate for 30 minutes, and filter. Evaporate the filtrate to dryness, and dissolve the residue in 15 ml of water. Extract with three 15-ml quantities of *n*-butanol saturated with water. Combine the *n*-butanol solutions, wash with three 15-ml quantities of water saturated with *n*-butanol. Evaporate the *n*-butanol solution to dryness, dissolve the residue in 0.5ml of methanol, add a small quantity of neutral alumina, stir well on a water bath, dry and apply to a previously prepared small column packed with neutral alumina (200-300 mesh, 1 g, 1-1.5 cm in internal diameter), elute with 50 ml of methanol. Collect the eluate and evaporate to dryness, dissolve the residue in 0.5 ml of methanol as the test solution. Prepare a solution with Radix et Rhizoma Glycyrrhizae reference drug and 40 ml of ethanol as the reference drug solution in the same manner. Carry out the method for thin layer chromatography (Appendix Ⅵ B), using silica gel G as the coating substance prepared with 1% sodium hydroxide solution and a mixture of toluene, ethyl acetate and methanol (7∶3∶1) as the mobile phase. Apply separately 1 μl of the test solution and 0.5 μl of the reference drug solution to the plate. After developing and removal of the plate, dry in air. Examine under ultraviolet light at 365 nm. The fluorescent spots in the chromatogram obtained with the test solution correspond in position and colour to the spots in the chromatogram obtained with the reference drug solution.

(4) Take 9 g of the pills, pulverize to powder. Add 80 ml of water, stand to dissolve, heat on the water bath for 2 hours, allow to cool, centrifuge for 10 minutes, separate the supernatant, add 2 ml of hydrochloric, and heat on the water bath for 1 hour, allow to cool. Extract with two 30-ml quantities of chloroform, combine the extract and concentrate to 1 ml as the test solution. Prepare a solution with 1 g of Radix Ophiopogonis reference drug and 50 ml of water as the reference drug solution in the same manner. Carry out the method for thin layer chromatography (Appendix Ⅵ B), using silica gel G as the coating substance and a mixture of chloroform and acetone (4∶1) as the mobile phase. Apply separately 2 μl of each of the above two

solutions to the plate. After developing and removal of the plate, dry it in air. Spray with 10% sulfuric acid in ethanol and heat at 105℃ to visualize clearly. The spots in the chromatogram obtained with the test solution correspond in position and colour to the spots in the chromatogram obtained with the reference drug solution.

Other requirements Comply with the general requirements for pills (Appendix I A).

Assay Carry out the method for high performance liquid chromatography (Appendix VI D).

Chromatographic system and system suitability Use octadecylsilane bonded silica gel as the stationary phase, a mixture of acetonitrile and water (11∶89) as the mobile phase. As detector a spectrophotometer set at 230 nm. The number of theoretical plates of the column is not less than 2000, calculated with the reference to the peak of paeoniflorin.

Reference solution Dissolve a quantity of paeoniflorin CRS, accurately weighed, in dilute ethanol TS to prepare a solution containing 50 μg per ml as the reference solution.

Test solution Pulverize the pills to powder. To 0.5 g, weigh accurately, in the stopper conical flask. Add accurately 25 ml of dilute ethanol TS, stopper well, weigh and stand for a night. Ultrasonicate (power, 300 W; frequency 50, kHz) for 40 minutes, allow to stand to room temperature, weigh again and replenish the lost weight with dilute ethanol TS. Mix thoroughly, filter and use the successive filtrate as the test solution.

Procedure Inject accurately 10 μl of the reference solution and 10-20 μl of the test solution into the column, and calculate the content.

It contents not less than 0.80 mg of paeoniflorin ($C_{23}H_{28}O_{11}$) per gram, referred to Radix Paeoniae Alba.

Action To nourish *yin* and moisten the lung, and resolve phlegm and stop coughing.

Indications Dry cough with expectoration of scanty phlegm or blood-flecked phlegm, and painful dry throat due to *yin* deficiency in the lung and kidney.

Usage and dosage 8 pills, 3 times a day.

Strength 8 pills equivalent to 3 g of crude drugs

Storage Preserve in tightly closed containers.

Bailing Jiaonang (百令胶囊)

Bailing Capsules

Bailing capsules is prepared from Fermented Cordyceps Powder (C_s-C-Q80).

Procedure To 200 g or 500 g of Fermented Cordyceps Powder, make to 1000 of capsules.

Description Hard capsules, containing gray to dark grayish-yellow powder; odour, slightly fishy; taste, slightly salty.

Identification (1) Place 1 g of the contents, add 15 ml of ethanol, ultrasonicate for 30 minutes, and filter, evaporate the filtrate to dryness, dissolve the residue in 1 ml of methanol as the test solution. Prepare a solution of 1 g of Fermented Cordyceps Powder reference drug in the same manner as the reference drug solution. Carry out the method for thin layer chromatography (Appendix VI B), using silica gel G as the coating substance and the mixture of petroleum ether (60-90℃), ethyl formate and formic acid (15∶5∶1) as the mobile phase. Apply separately 5 μl of each of the two solutions to the plate. After developing and removal of the plate, dry in air, examine under ultraviolet light at 365 nm. The spots in the chromatogram obtained with the test solution correspond in position and colour to the spots in the chromatogram obtained with the reference drug solution.

(2) The retention time of the peaks obtained with the test solution obtained under the Assay of Total amino acids and the 2-amino-3-p-hydroxyphenylpropionic acid, lysine, histidine and dl-arginine CRS is concordant with each other.

(3) To 0.5 g of the Fermented Cordyceps Powder (C_S-C-Q80) reference drug, produce a reference drug solution in the same mammer discribed under the preparation of test solution on the Assay of adenosin. Dissolve a quantity of uridine CRS, in 10% methanol to produce a solution containing 5 μg per ml as the reference solution. Carry out the method for high performance liquid chromatography (Appendix VI D), use octadecylsilane bonded silica gel as the stationary phase, acetonitril as the mobile phase A, 0.04 mol solution of potassium dihydrogen phosphate as the mobile phase B, elute in gradient as the following:

Time (min)	Mobile phase A (per cent V/V)	Mobile phase B (per cent V/V)
0-15	0	100
15-45	0→15	100→85

As detector a spectrophotometer set at 260 nm. The number of theoretical plates for the column is not less than 3000, calculated with the reference to the peak of adenosin. Inject accurately 20 μl of each of the test solution obtained under the Assay, adenosine and uridine CRS reference solution, and the above reference drug solution, respectively, into the column and record the chromatograms. Except the solvent peak, the retention times of the six peaks obtained with the test solution and the reference drug solution are concordant with each other, the retention times of the peaks obtained with the test solution and the adenosine and uridine reference solution are concordant with each other.

Other requirements Comply with the general requirements for capsules (Appendix I L).

Assay ***Total amino acids*** To 20 mg of the contents, obtained under the test of weight variation, weighed accurately, with 6 ml of 6 mol/L of hydrochloric acid solution in a test tube (180 mm × 18 mm), stopped in vacum, to a bake oven at 110℃ for 24 hours. Transfer the content of the test tube to a 2-amino-3-p-hydroxyphenylpropionic acid, wash the test tube with 25 ml of water for several times, combine the washings to the same evaporating basin, evaporate to dryness, wash the residue with 0.02 mol/L hydrochloric acid solution for several times, combine the washings, and filter. Transfer the filtrate to a 50 ml volumetric flask, add the 0.02 mol/L hydrochloric acid solution to volume, mix well, calculate with amino acids determination meter.

It contains not less than 60 mg of total amino acid per capsule for strength (1); 150 mg of total amino acid per capsule for strength (2).

Mannitol Weigh accurately 1 g of the content, weighed accurately, to a 150 ml round bottom flask, add accurately 100 ml of ethanol, weighed accurately, heat under reflux for 2 hours, cool, add ethanol to the original weight, mix well and filter. Measure accurately 5 ml of the successive filtrate, to a iodine flask, add accurately 50 ml of the iodine flask (Kal) solution prepared with 90 ml of sulfuric acid solution

(1→20) mixed with 110 ml of iodine flask (Kal) solution (2.3→1000), heat on a water bath for 15 ml, cool, add 10 ml of potassium iodide TS, stopped tightly, allow to stand for 5 minutes. Titrate with sodium thiosulfate (0.05 mol/L) VS, towards the end of fitration, add starch IS, continue to titrate until the blue colour disappears. 1 ml of sodium thiosulfate (0.05 mol/L) corresponds to to 0.9109 mg of mannitol ($C_6H_{14}O_6$).
It contains not less than 14 mg of total mannitol ($C_6H_{14}O_6$) per capsule for specification (1); 35 mg of total mannitol ($C_6H_{14}O_6$) per capsule for specification (2).

Adenosine Carry out the method for high performance liquid chromatography (Appendix Ⅵ D).

Chromatographic system and system suitability Use octadecylsilane bonded silica gel as the stationary phase and the mixture of acetonitrile and 0.04 mol/L potassium dihydrogen phosphate (5∶95) as the mobile phase. As detector a spectrophotometer set at 260 nm. The number of theoretical plates for the column is not less than 3000, calculated with the reference to the peak of Adenosine.

Reference solution Dissolve a quantity of Adenosine CRS, accurately weighed, in 0.5% phosphoric acid to produce a solution containing 12 μg per ml as the reference solution.

Test solution Weigh accurately 0.5 g of the content of the capsule obtained under the test of weight variation, and mix well to a stopper conical flask. Add accurately 20 ml of ether, stopped tightly, macerate for 30 minutes, filter and discard ether. Evaporate the residue to dryness, to a stopper conical flask companied with filter paper. Add accurately 50 ml of 0.5% phosphoric acid, stopped tightly, weigh accurately, ultrasonicate (power, 250 W; frequency, 33 kHz) for 30 minutes, cool, weigh accurately again, replenish the lost weight with 0.5% phosphoric acid, mix well and allow to stand. Filter the supernatant liquid, use the successive filtrate as the test solution.

Procedure Inject accurately 10 μl of the reference solution and the test solution into the column and calculate the content.
It contains not less than 0.16 mg of adenosine ($C_{10}H_{13}N_5O_4$) per capsule for strength (1); 0.40 mg of adenosine ($C_{10}H_{13}N_5O_4$) per capsule for strength (2).

Action To reinforce the lung and kidney, and replenish essence and *qi*.

Indications Coughing, shortness of breath, hemoptysis, aching pain in the back and lower back due to deficiency in the lung and kidney.

Usage and dosage 5-15 capsules of Strength (1) or 2-6 capsules of strength (2), 3 times a day.

Strength (1) 0.2 g per capsule (2) 0.5 g per capsule

Storage Tightly closed.

Baizi Yangxin Wan
(柏子养心丸)

Baizi Yangxin Pills

Ingredients Semen Platycladi 25 g; Radix Codonopsis 25 g; Radix Astragali Praeparata Cum Melle 100 g; Rhizoma Chuanxiong 100 g; Radix Angelicae Sinensis 100 g; Poria 200 g; Radix Polygalae (processed) 25 g; Semen Ziziphi Spinosae 25 g; Cortex Cinnamomi 25 g; Fructus Schisandrae Chinensis (steamed) 25 g; Massa Pinelliae Fermentata 100 g; Radix et Rhizoma Glycyrrhizae Praeparata Cum Melle 10 g; Cinnabaris 30 g.

Procedure Levigate Cinnabaris to very fine powder. Pulverize the other twelve ingredients to fine powder, grind well with the above powder, sift and mix well. To each 100 g of the powder add 25-40 g of refined honey and a quantity of water to make water-honeyed pills. Alternatively, add 100-130 g of refined honey to make small honeyed pills or big honeyed pills.

Description Brown water-honeyed pills, brown to dark brown small honeyed pills or big honeyed pills; taste, sweet and then bitter, slightly numb.

Identification (1) Microscopical: Irregular branched masses colourless, dissolved in chloral hydrate TS; hyphae colourless or pale brown, 4-6 μm in diamater. Parenchymatous cells fusiform, walls slightly thickened, with very fine and oblique crisscross striations. Fibres in bundles or scattered, walls thickened, with longitudinal fissures on the surface, both ends broken to broom-like or truncate. Fibre bundles surrounded by parenchymatous cells containing prisms of calcium oxalate, forming crystal fibres. Stone cells subrounded or subrectangular, 32-88 μm in diameter, with thin walls at one side. Epidermal cells of testa pale yellowish-brown, subpolygonal in surface view, walls relatively thickened, with fine and dense pit-cannals, containing dark brown contents. Endopleura cells yellow, rectangular or long polygonal in surface view, with slightly sinuous walls. Endopleura cells brownish-yellow, rectangular or subsquare in surface view, anticlinal walls beaded. Anastomosing laticiferous tubes 12-15 μm in diameter, containing fine granules. Crystals of calcium oxalate subrounded or clustered crystal-like, occurring in parenchymatous cells. Needle crystals of calcium oxalate in bundles, 32-144 μm long, occurring in mucilage cells or scattered. Irregular fine granules brownish-red, lustrous, with dark black edges.
(2) Pulverize 12 g of water-honeyed pills; or cut 18 g of small honeyed pills or big honeyed pills into pieces, grind well with 10 g of kieselguhr. Put into a Soxhlet's extractor, heat under reflux with ether on a water bath until the extract becomes almost colourless. Expel the ether of the residue, heat under reflux with a quantity of methanol on a water bath until the extract becomes almost colourless, and evaporate the extract to dryness. Dissolve the residue in 40 ml of water, extract with four 30-ml quantities of *n*-butanol saturated with water, combine the *n*-butanol solutions, extract with three 40-ml quantities of ammonia TS, discard the ammonia solutions, and evaporate the *n*-butanol extracts to dryness. Dissolve the residue in 10 ml of 40% methanol, apply to a column packed with neutral alumina (80 mesh, 5 g, 1.5 cm in internal diameter). Elute with 150 ml of 40% methanol, collect the eluate and evaporate to dryness. Dissolve the residue in 1 ml of methanol as the test solution. Dissolve astragaloside Ⅳ CRS in methanol to produce a solution containing 1 mg per ml as the reference solution. Carry out the method for thin layer chromatography (Appendix Ⅵ B), using silica gel G as the coating substance and the lower layer of chloroform, methanol and water (13∶7∶2) as the mobile phase. Apply separately 5 μl of each of the above two solutions to the plate. After developing and removal of the plate, dry in air. Spray with 10% sulfuric acid in ethanol, heat at 105℃ for about 5 minutes, and examine separately in daylight and under ultraviolet light at 365 nm. The spot in daylight and the fluorescent spot under ultraviolet light in the chromatogram obtained with the test solution corresponds in position and colour to the spot in the chromatogram obtained with the reference solution.
(3) Pulverize 12 g of water-honeyed pills; alternatively cut 18 g of small honeyed pills or big honeyed pills into pieces, grind well with 10 g of kieselguhr. Add 50 ml of ether and

10 ml of ammonia TS, mix well, allow to stand for 24 hours, and filter. Evaporate the filtrate to dryness, dissolve the residue in 1 ml of dehydrated ethanol as the test solution. To 1 g of the Rhizoma Chuanxiong reference drug, add 10 ml of ether and 2 ml of ammonia TS to produce a reference drug solution in the same manner. Carry out the method for thin layer chromatography (Appendix Ⅵ B), using silica gel G prepared with 1% sodium hydroxide solution as the coating substance and a mixture of petroleum ether (30-60℃) and chloroform (1 : 1) as the mobile phase. Apply separately 10 μl of each of the above two solutions to the plate. After developing and removal of the plate, dry it in air. Spray with dilute potassium iodobismuthate TS. The spots in the chromatogram obtained with the test solution correspond in position and colour to the spots in the chromatogram obtained with the reference drug solution.

Other requirements Comply with the general requirements for pills (Appendix Ⅰ A).

Action To reinforce *qi*, nourish blood and anchor the mind.

Indications Insufficient *heart-qi* in a cold syndrome, palpitation, proneness to fright, insomnia, dreamfulness and amnesia.

Usage and dosage 6 g of water-honeyed pills, 9 g of small honeyed pills or 1 big honeyed pill, twice day.

Strength 9 g per big honeyed pill

Storage Preserve in tightly closed containers.

Banlangen Cha (板蓝根茶)

Banlangen Tea

Banlangen Tea is the medicinal tea prepared from Radix Isatidis.

Procedure Decoct 1400 g of Radix Isatidis with water twice, 2 hours for the first time and 1 hour for the second time. Combine the decoctions and filter. Concentrate the filtrate to a solution with a relative density of 1.20 (50℃), add ethanol and adjust the concentration of ethanol to 60%, and stand to precipitate completely. Recover ethanol of the supernatant and concentrate to an appropriate quantity, add a quantity of sucrose and dextrin, compress to 100 pieces, and dry.

Description Brown or dark brown pieces; taste, sweet and slightly bitter.

Identification (1) Dissolve 0.5 g of the tea in 5 ml of water, stand. Apply the supernatant to a filter paper, dry in air. Examine under ultraviolet light at 365 nm, the spot appears bluish-purple colour.
(2) Dissolve 0.5 g of the tea in 10 ml of water, and filter. To 1 ml of the filtrate, add 0.5 ml of ninhydrin TS, heat on water bath for several minutes, a bluish-violet colour is produced.

Other requirements Complies with the general requirements for the teas (Appendix Ⅰ T).

Action To clear heat and toxicity, and cool blood to ease the throat.

Indications Swollen painful throat, dry mouth and pharynx and swollen cheeks due to extremely abundant heat in the lung and stomach; acute tonsillitis and mumps with above symptoms.

Usage and dosage To be taken with the boiled water. 1 piece, 3 times a day.

Strength (1) 10 g per piece (2) 15 g per piece

Storage Preserve in tightly closed containers.

Banlangen Keli (板蓝根颗粒)

Banlangen Granules

Banlangen Granules are the granules prepared from Radix Isatidis.

Procedure Decoct 1400 g of Radix Isatidis with water twice, 2 hours for the first time and 1 hour for the second time. Combine the decoctions and filter. Concentrate the filtrate to an extract with a relative density of 1.20 (50℃), adjust the concentration of ethanol to 60%, stir well, and stand to precipitate completely. Recover ethanol of the supernatant and concentrate to an appropriate quantity. Add a quantity of sucrose and dextrin to make granules, dry, make to 1000 g; or add a quantity of dextrin and sweetening agent to make granules, dry, make to 600 g.

Description Brown or dark brown granules; taste, sweet, slightly bitter; or taste, slightly bitter (without sucrose).

Identification (1) Dissolve 0.5 g of the granules (with sucrose) or 0.3 g of the granules (without sucrose) in 5 ml of water, stand. Apply the supernatant to a piece of filter paper, dry in air, and examine under ultraviolet light at 365 nm; a bluish-purple colour is shown.
(2) Dissolve 0.5 g of the granules (with sucrose) or 0.3 g of the granules (without sucrose) in 10 ml of water, and filter. To 1 ml of the filtrate, add 0.5 ml of ninhydrin TS, heat on a water bath for several minutes; a bluish-purple colour is produced.

Other requirements Comply with the general requirements for granules (Appendix Ⅰ C).

Action To clear *heat* and *toxicity*, and cool blood to ease the throat.

Indications Swollen painful throat, dry mouth and pharynx and swollen cheeks due to extremely abundant heat in the lung and stomach; acute tonsillitis and mumps with above symptoms.

Usage and dosage 5-10 g (with sucrose) or 3-6 g (without sucrose), 3-4 times a day, taken after dissolved in boiling water.

Strength (1) 5 g per pack (2) 10 g per pack
(3) 3 g per pack (without sucrose)

Storage Preserve in tightly closed containers.

Baochi San (保赤散)

Baochi Powder

Ingredients Massa Medicata Fermentata (stir-baked) 250 g; Semen Crotonis Pulveratum 150 g; Rhizoma Arisaematis (processed) 400 g; Cinnabaris 250 g.

Procedure Levigate Cinnabaris to very fine powder, pulverize Massa Medicata Fermentata and Rhizoma Arisaematis to fine powder. Pulverize Semen Crotonis

Pulveratum to fine powder and triturate with the above powders, sift and mix well.

Description A pink to orange-red powder; taste, weak and slightly pungent.

Identification (1) Microscopical: Needle crystals of calcium oxalate in bundles or scattered, up to about 90 μm long. Clusters of calcium oxalate 8-24 μm in diameter, occurring in subrounded parenchymatous cells. Irregular fine granules brownish-red, lustrous, with dark black edge.
(2) To 0.5 g of the powder, add 5 ml of 20% hydrochloric acid solution and several small clean copper plates, heat directly on a flame for several minutes, remove the copper plates, wash with water, a silver colour is produced on the surface of copper plates, which disappears on gentle heating.

Other requirements Complies with the general requirements for powders (Appendix Ⅰ B).

Assay To about 0.5 g of the powder, accurately weighed, in a 250 ml conical flask, add 10 ml of sulfuric acid and 1.5 g of potassium nitrate, and heat to dissolve Cinnabaris. Allow to cool, add 50 ml of 1% nitric acid carefully, shake well, cool again, add dropwise 1% solution of potassium permanganate until a pink colour develops (persisting for 2 minutes), then add dropwise 2% ferrous sulfate solution until the pink colour disappears. Add 2 ml of ammonium ferric sulfate IS, and titrate with ammonium thiocyanate (0.1 mol/L) VS. Each ml of ammonium thiocyanate (0.1 mol/L) VS corresponds to 11.63 mg of HgS.
It contains not less than 0.21 g and not more than 0.25 g of Cinnabaris per gram, calculated as HgS.

Action To promote digestion to remove retained food, and resolve phlegm to relieve convulsion.

Indications Child retention of food due to interior *cold*, no desire for food or milk, constipation, fullness in the abdomen and expectoration of much phlegm.

Usage and dosage 0.09 g, for children of 0.5-1 year old, 0.18 g, for children of 2-4 years old.

Precaution Contraindicated for diarrhea patients.

Strength 0.09 g per bottle

Storage Preserve in well closed containers, protected from moisture.

Baofukang Shuan
(保妇康栓)

Baofukang Suppositories

Ingredients Oleum Curcumae 82 g; Borneolum Syntheticum 75 g.

Procedure To Oleum Curcumae add 75 g of Tween-80, mix well, dissolve Borneolum Syntheticum with a quantity of ethanol, add it to the above oil solution, mix well. Melt 1551 g of polyoxyethylene stearate on a water bath, add the above solution, stir well, pour into a suppository mould, cool, make 1000 suppositories.

Description Milky white, milky yellow or brownish-yellow, bullet-shaped suppositories.

Identification To 1 suppository add a quantity of water, heat to melt on a water bath, and allow to cool. Add 15 ml of petroleum ether (30-60℃), ultrasonicate for 20 minutes, separate the petroleum ether layer and concentrate to about 1 ml as the test solution. Prepare a solution with 1 g of Rhizoma Curcumae reference drug and 15 ml of petroleum ether (30-60℃) in the same manner as the reference drug solution. Carry out the method for thin layer chromatography (Appendix Ⅵ B), using silica gel G as the coating substance and petroleum ether (60-90℃) as the mobile phase. Apply separately 5-10 μl of each of the above two solutions to the plate. After developing and removal of the plate, dry in air. Spray with 5% vanillin in sulfuric acid. The two pink spots in the chromatogram obtained with the test solution correspond in position and colour to the spots in the chromatogram obtained with the reference drug solution.

Other requirements Comply with the general requirements for suppositories (Appendix Ⅰ W).

Assay ***Oleum Curcumae*** Carry out the method for gas chromatography (Appendix Ⅵ E).

Chromatographic system and system suitability Use capillary column packed with polyethylene glycol (PEG)-20M (10 cm in length, 0.53 mm in inner diameter, 0.1 μm film thickness). Column temperature: initial temperature 150℃, maintain 10 minutes; increase at 2℃ per minute to 180℃, maintain 10 minutes, increase at 10℃ per minute to 200℃, maintain 5 minutes. The number of theoretical plates of the column is not less than 10000, calculated with the reference to the peak of curcumenol.

Reference solution Dissolve a quantity of curcumenol CRS, accurately weighed, in ethyl acetate to prepare a solution containing 2.4 mg per ml as the reference solution.

Test solution To 5 suppositories, obtained under the test of weight variation, add 300 ml of water and several glass beads. Carry out the method for determination of volatile oil (Appendix Ⅹ D). Add water through the top of the apparatus until fills the collector and overflows to the flask, then add 3 ml of ethyl acetate, heat to boil and keep boiling for 5 hours, allow to stand to room temperature, separate the ethyl acetate layer. Wash the apparatus with three 5-ml quantities of ethyl acetate, combine the ethyl acetate solutions, pass through a funnel packed with anhydrous sodium sulfate, transfer to a 25 ml volumetric flask, wash the filter with a small quantity of ethyl acetate, add the washings to the same volumetric flask. dilute with ethyl acetate to volume and mix well.

Procedure Inject accurately 1 μl of each of the reference solution and test solution into the column, calculate the content.
It contains not less than 10.0 mg of curcumenol ($C_{15}H_{24}O_2$) for each suppository, referred to Oleum Curcumae.

Borneolum Syntheticum

Chromatographic system and system suitability Use 10% polyethylene glycol (PEG)-20M as the stationary phase, maintain the column temperature at 130℃. The number of theoretical plates of the column is not less than 3000, calculated with the reference to the peak of naphthalene.

Correction factor Dissolve a quantity of naphthalene in ethyl acetate to prepare a solution containing 20 mg per ml as internal standard solution. Weigh accurately 75 mg of a mixture of (±)-borneol and (±) isoborneol CRS in a 10 ml volumetric flask, add accurately 2 ml of the internal standard solution, dilute to volume with ethyl acetate and mix well. Inject accurately 1 μl of this solution into the column; calculate the correction factor according to the average value of peak areas.

Procedures Measure accurately 5 ml of the test solution obtained under the Assay of Oleum Curcumae, to a 10 ml volumetric flask, add accurately 2 ml of the internal standard solution, dilute to volume with ethyl acetate and mix

thoroughly. Inject accurately 1 μl of the solution into the column, and calculate the content according to the total value of peak areas of (±)-borneol and (±)-isoborneol. It contains not less than 60.0 mg and not more than 90.0 mg of a mixture of (±)-borneol ($C_{10}H_{18}O$) and (±)-isoborneol ($C_{10}H_{18}O$) for each suppository, referred to Borneolum Syntheticum.

Action To move *qi* and remove blood stasis, and regenerate flesh and kill pain.

Indications Leukorrheal disease due to accumulation of *damp-heat* with manifestations of leukorrhagia, yellow in colour, or pruritus valvae sometimes; colpomycosis, senile vaginitis and erosion of cervix with above symptoms.

Usage and dosage 1 suppository per night. Wash clear the vulva, insert the suppository deeply into the vagina; or used under doctor's direction.

Strength 1.74 g per suppository

Storage Preserve in well closed containers, protected from light, store below 30℃.

Baohe Wan
(保和丸)

Baohe Pills

Ingredients Fructus Crataegi (charred) 300 g; Massa Medicata Fermentata (stir-baked) 100 g; Rhizoma Pinelliae (processed) 100 g; Poria 100 g; Pericarpium Citri Reticulatae 50 g; Fructus Forsythiae 50 g; Semen Raphani (stir-baked) 50 g; Fructus Hordei Germinatus (stir-baked) 50 g.

Procedure Pulverize the above eight ingredients to fine powder, sift, mix well. Each 100 g of the powder add 125-155 g of refined honey to make big honeyed pills.

Description Brown big honeyed pills; odour, slightly aromatic; taste, slightly sour, astringent and sweet.

Identification (1) Microscopical: Irregular branched masses colourless, dissolved in chloral hydrate TS; hyphae colourless or pale brown, 4-6 μm in diameter. Stone cells of pericarp pale purplish-red, red or yellowish-brown, subrounded or polygonal, up to about 125 μm in diameter. Needle crystals of calcium oxalate in bundles, 32-144 μm long, occurring in mucilage cells or scattered. Prisms of calcium oxalate abundant in parenchyma. The upper and lower layers of fibres of endocarp crisscrossed, fibres pale yellowish-green, short fusiform, pit canals visible. Epidermal cells in longitudinal rows, frequently one long cell alternately joined to two short cells, the longer cells with thickened, sinuous, and lignified walls. Fragments of testa yellow or brownish-red, cells small, polygonal, with thickened walls.

(2) Take 30 g of the pills, cut into pieces, add 80 ml of water, heat under reflux for 1 hour, filter through gauze while hot, evaporate the filtrate to dryness. Heat under reflux the residue with 20 ml of ethanol for 1 hour, filter, evaporate the filtrate to dryness, dissolve the residue in 2 ml of ethanol and filter, use the filtrate as the test solution. Heat under reflux 1 g of Fructus Forsythiae reference drug with 20 ml of water for 1 hour, filter, evaporate the filtrate to dryness, dissolve the residue in 20 ml of ethanol, prepare the reference drug solution in the same manner. Carry out the method for thin layer chromatography (Appendix Ⅳ B), using silica gel G as the coating substance and a mixture of chloroform and methanol (20∶3) as the mobile phase. Apply separately 10 μl of each of the above two solutions to the plate. After developing and removal of the plate, dry in air. Spray with a mixture of acetic anhydride and sulfuric acid (20∶1), heat at 105 ℃ for about 10 minutes, cool, examine under ultraviolet light at 365 nm. The fluorescent spots in the chromatogram obtained with the test solution correspond in position and colour to the spots in the chromatogram obtained with the reference drug solution.

(3) Take 10 g of the pills, cut into pieces, grind well with 10 g of kieselguhr. Put into a Soxhlet's extractor, heat under reflux with 50 ml of petroleum ether (30-60℃) on a water bath for 1 hour, discard the petroleum ether solution. Heat under reflux with 40 ml of methanol on a water bath for 30 minutes, evaporate the extract to dryness, dissolve the residue in 10 ml of methanol, filter, use the filtrate as the test solution. Dissolve hesperidin CRS in methanol to produce a saturated solution as the reference solution. Carry out the method for thin layer chromatography (Appendix Ⅵ B), using silica gel G mixed with 0.5% sodium hydroxide solution as the coating substance and a mixture of ethyl acetate, methanol and water (100∶17∶13) as the mobile phase. Apply separately 2 μl of each of the above two solutions to the plate. Develop to a distance of 3 cm, dry in air, then, using the upper layer of toluene, ethyl acetate, formic acid and water (20∶10∶1∶1) as the mobile phase, develop again to 8 cm, dry in air. Spray with 1% aluminium chloride in methanol, dry in air, and examine under ultraviolet light at 365 nm. The fluorescent spot in the chromatogram obtained with the test solution corresponds in position and colour to the spot in the chromatogram obtained with the reference solution.

Other requirements Comply with the general requirements for pills (Appendix Ⅰ A).

Assay Carry out the method for high performance liquid chromatography (Appendix Ⅵ D).

Chromatographic system and system suitability Use octadecylsilane bonded silica gel as the stationary phase, a mixture of methanol, acetic acid and water (42∶4∶54) as the mobile phase. As detector a spectrophotometer set at 283 nm. Maintain the column temperature at 40℃. The number of theoretical plates of the column is not less than 2000, calculated with the reference to the peak of hesperidin.

Reference solution Weigh accurately 10 mg of hesperidin CRS, dissolve with methanol (ultrasonicate if necessary) in a 50 ml volumetric flask, dilute to volume with methanol and mix well. Transfer accurately 2 ml of it to 10 ml volumetric flask, dilute to volume with mobile phase, mix well. (The solution containing 40 μg of hesperidin CRS per ml)

Test solution To about 5 g of the big honeyed pills, obtained in the test of weight variation, cut into pieces, weigh accurately, add a quantity of kieselguhr, triturate well, transfer to a Soxhlet's extractor, add 80 ml of petroleum ether (60-90℃), heat under reflux for 2-3 hours. Discard the petroleum ether extract and evaporate the residue to dryness, add 80 ml of methanol, heat under reflux until the extract solution is colourless, cool and filter. Transfer the filtrate to a 100 ml volumetric flask, wash the container with a small quantity of methanol for several times, filter the washings to the same flask, dilute with methanol to volume, and mix well. Transfer accurately 5 ml of it to 10 ml volumetric flask, dilute with mobile phase to volume. Mix well, filter and use the successive filtrate as the test solution.

Procedure Inject accurately 5 μl of each of the reference solution and the test solution separately into the column, calculate the content.

It containts not less than 7.0 mg of hesperidin ($C_{28}H_{34}O_{15}$)

per pill, referred to Pericarpium Citri Reticulatae.

Action To promote digestion to remove retained food, and harmonize the stomach.

Indications Fullness in the stomach and abdomen, fetid eructation and casting up of gastric acid, and poor appetite due to retained food in the stomach.

Usage and dosage 1-2 pills, twice a day; appropriate reduction of the dosage for children.

Strength 9 g per pill

Storage Preserve in tightly closed containers.

Baohe Wan (Shui wan)
(保和丸，水丸)

Baohe Watered Pills

Ingredients Fructus Crataegi (charred) 300 g; Massa Medicata Fermentata (stir-baked) 100 g; Rhizoma Pinelliae (processed) 100 g; Poria 100 g; Pericarpium Citri Reticulatae 50 g; Fructus Forsythiae 50 g; Semen Raphani (stir-baked) 50 g; Fructus Hordei Germinatus (stir-baked) 50 g.

Procedure Pulverize the above eight ingredients to fine powder, sift, mix well, make pills with water and dry.

Description Greyish-brown to browm watered pills; odour, slightly aromatic; taste, slightly sour and astringent.

Identification (1) Microscopical: Irregular branched masses colourless, dissolved in chloral hydrate TS; hyphae colourless or pale brown, 4-6 μm in diameter. Stone cells of pericarp pale purplish-red, red or yellowish-brown, subrounded or polygonal, up to about 125 μm in diameter. Needle crystals of calcium oxalate in bundles, 32-144 μm long, occurring in mucilage cells or scattered. Prisms of calcium oxalate abundant in parenchyma. The upper and lower layers of fibres of endocarp crisscrossed, fibres short fusiform. Epidermal cells in longitudinal rows, frequently one long cell alternately joined to two short cells, the longer cells with thickened, sinuous, and lignified walls. Fragments of testa yellow or brownish-red, cells small, polygonal, with thickened walls.

(2) Pulverize 16 g of the pills to powder, add 80 ml of water, heat under reflux for 1 hour, filter through gauze while hot, evaporate the filtrate to dryness. Heat under reflux the residue with 20 ml of ethanol for 1 hour, filter, evaporate the filtrate to dryness, dissolve the residue in 2 ml of ethanol and filter, use the filtrate as the test solution. Heat under reflux 1 g of Fructus Forsythiae reference drug with 20 ml of water for 1 hour, filter, evaporate the filtrate to dryness, dissolve the residue in 20 ml of ethanol, prepare the reference drug solution in the same manner. Carry out the method for thin layer chromatography (Appendix Ⅳ B), using silica gel G as the coating substance and a mixture of chloroform and methanol (20∶3) as the mobile phase. Apply separately 10 μl of each of the above two solutions to the plate. After developing and removal of the plate, dry in air. Spray with a mixture of acetic anhydride and sulfuric acid (20∶1), heat at 105℃ for about 10 minutes, cool, examine under ultraviolet light at 365 nm. The fluorescent spots in the chromatogram obtained with the test solution correspond in position and colour to the spots in the chromatogram obtained with the reference drug solution.

(3) Pulverize 5 g of the pills. Put into a Soxhlet's extractor, heat under reflux with 50 ml of petroleum ether (30-60℃) on a water bath for 1 hour, discard the petroleum ether solution. Heat under reflux with 40 ml of methanol on a water bath for 30 minutes, evaporate the extract to dryness, dissolve the residue in 10 ml of methanol, filter, use the filtrate as the test solution. Dissolve hesperidin CRS in methanol to produce a saturated solution as the reference solution. Carry out the method for thin layer chromatography (Appendix Ⅵ B), using silica gel G mixed with 0.5% sodium hydroxide solution as the coating substance and a mixture of ethyl acetate, methanol and water (100∶17∶13) as the mobile phase. Apply separately 2 μl of each of the above two solutions to the plate. Develop to a distance of 3 cm, dry in air, then, using the upper layer of toluene, ethyl acetate, formic acid and water (20∶10∶1∶1) as the mobile phase, develop again to 8 cm, dry in air. Spray with 1% aluminium chloride in methanol, dry in air, and examine under ultraviolet light at 365 nm. The fluorescent spot in the chromatogram obtained with the test solution corresponds in position and colour to the spot in the chromatogram obtained with the reference solution.

Other requirements Comply with the general requirements for pills (Appendix Ⅰ A).

Assay Carry out the method for high performance liquid chromatography (Appendix Ⅵ D).

Chromatographic system and system suitability Use octadecylsilane bonded silica gel as the stationary phase, a mixture of methanol, acetic acid and water (42∶4∶54) as the mobile phase. As detector a spectrophotometer set at 283 nm. Maintain the column temperature at 40℃. The number of theoretical plates of the column is not less than 2000, calculated with the reference to the peak of hesperidin.

Reference solution Weigh accurately 10 mg of hesperidin CRS, dissolve with methanol (ultrasonicate if necessary) in a 50 ml volumetric flask, dilute to volume with methanol and mix well. Transfer accurately 2 ml of it to 10 ml volumetric flask, dilute to volume with the mobile phase, mix well. (The solution containing 40 μg of hesperidin CRS per ml)

Test solution Triturate a quantity of the pills to fine powder and mix well. To about 2 g of the powder, weighed accurately, in a Soxhlet's extractor, add 80 ml of petroleum ether (60-90℃), heat under reflux for 2-3 hours. Discard the petroleum ether extract and evaporate the residue to dryness, add 80 ml of methanol, heat under reflux until the extract solution is colourless, cool and filter. Transfer the filtrate to a 100 ml of a volumetric flask, wash the container with a small quantity of methanol for several times, filter the washings to the same flask, dilute with methanol to volume, and mix well. Transfer accurately 5 ml of it to 10 ml volumetric flask, dilute with mobile phase to volume. Mix well, filter and use the successive filtrate as the test solution.

Procedure Inject accurately 5 μl of each of the reference solution and the test solution separately into the column, calculate the content.

It contains not less than 1.8 mg of hesperidin ($C_{28}H_{34}O_{15}$) per gram, referred to Pericarpium Citri Reticulatae.

Action To promote digestion to remove retained food, and harmonize the stomach.

Indications Fullness in the stomach and abdomen, fetid eructation and casting up of gastric acid, and poor appetite due to retained food in the stomach.

Usage and dosage 6-9 g of pills, appropriate reduction of the dosage for children.

Storage Preserve in well closed containers, protected from moisture.

Baoji Wan
(保济丸)

Baoji Pills

Ingredients Ramulus Uncariae Cum Uncis; Flos Chrysanthemi; Fructus Tribuli; Cortex Magnoliae; Radix Aucklandiae; Rhizoma Atractylodis; Radix Trichosanthis; Herba Pogostemonis; Radix Puerariae; Exocarpium Citri Grandis; Radix Angelicae Dahuricae; Semen Coicis; Oryzae Germinatus; Herba Menthae; Poria; Massa Medicata Fermentata (Guangdong produced)

Procedure Pulverize the above sixteen ingredients to fine powder, sift, mix well, make pills with water, and dry. Coat with a mixture of carmine, talc powder and ferric oxide as the pigment, and dextrin as the adhesive, and dry.

Description Vermilion water pills; odour, aromatic; taste, slight bitter and pungent.

Identification (1) Microscopical: Irregular branched masses colourless, dissolved in chloral hydrate TS; hyphae colourless or pale brown, 4-6 μm in diameter, Needle crystals of calcium oxalate fine, 10-32 μm long, irregularly filling in parenchymatous cells. Pollen grains subrounded, 24-34 μm in diameter, exine with spines of 3-5 μm long, with three apertures.

(2) Grind 5 g to fine powder, ultrasonicate with 40 ml of ethanol for 15 minutes, allow to cool, filter, evaporate the filtrate to dryness. Wash the residue with a small quantity of ether three times, discard the ether solutions, dissolve the residue in 1 ml of methanol and use it as the test solution. Dissolve puerarin CRS and naringin CRS separately in methanol to prepare solutions each containing 0.5 mg per ml as the reference solutions. Carry out the method for thin layer chromatography (Appendix Ⅵ B), using silica gel G mixed with 0.5% solution of sodium hydroxide as the coating substance and a mixture of chloroform, methanol and water (70∶25∶4) as the mobile phase. Apply separately to the plate 5 μl of each of the three solutions. After developing and removal of the plate, examine under ultraviolet light at 365 nm. A fluorescent spot in chromatogram obtained with the test solution corresponds in position and colour to the fluorescent spot in the chromatogram obtained with the puerarin reference solution. Spray with 5% aluminium chloride in ethanol and examine under ultraviolet light at 365 nm. A fluorescent spot in chromatogram obtained with the test solution corresponds in position and colour to the fluorescent spot in the chromatogram obtained with the naringin reference solution.

Other requirements Comply with the general requirements for pills (Appendix Ⅰ A).

Assay Carry out the method for high performance liquid chromatography (Appendix Ⅵ D).

Chromatographic system and system suitability Use octadecasilane bonded silica gel as the stationary phase and a mixture of acetonitrile, water and acetic acid (60∶40∶4) as the mobile phase. As detector a spectrophotometer set at 294 nm. The number of theoretical plates of the column is not less than 3000, calculated with the reference to the peak of magnolol.

Reference solution Dissolve a quantity of magnolol CRS and honokiol CRS, accurately weighed, in methanol to produce a mixture containing 90 μg of magnolol and 120 μg of honokiol per ml as the reference solution.

Test solution Weigh accurately 1.0 g, in fine powder, in a stopper conical flask, add 100 ml of petroleum ether (30-60℃) and ultrasonicate (power 500 W, frequency 33 kHz) for 30 minutes, and filter. Ultrasonicate the residue again with 50 ml of petroleum ether (30-60℃) for 30 minutes and filter. Combine the filtrates, evaporate to dryness, dissolve the residue in methanol, transfer to a 10 ml volumetric flask, dilute to volume with methanol, shake well, filter and use the successive filtrate as the test solution.

Procedure Inject accurately 10 μl each of the reference solution and the test solution into the column, respectively, and calculate the content.

It contains not less than 0.40 mg of the total amount of magnolol ($C_{18}H_{18}O_2$) and honokiol ($C_{18}H_{18}O_2$) per gram of water-honeyed pills, referred to Cortex Magnoliae Officinalis.

Action To release the exterior, expel *dampness* and harmonize the *middle-energizer*.

Indications Common cold due to summer *dampness* with manifestations of fever, headache, abdominal pain, diarrhea, nausea, vomiting, discomfort in the stomach and intestines; motion sickness.

Usage and dosage 1.85-3.70 g of watered pills, 3 times a day.

Precaution Contraindicated for patients with affliction from exogenous pathogenic factors and *dry-heat*.

Strength (1) 1.85 g (2) 3.70 g per bottle

Storage Preserve in tightly closed containers, protected from moisture.

Baokening Keli
(宝咳宁颗粒)

Baokening Granules

Ingredients Folium Perillae 30 g; Folium Mori 30 g; Radix Peucedani 60 g; Bulbus Fritillariae Thunbergii 30 g; Herba Ephedrae 30 g; Radix Platycodonis 30 g; Rhizoma Arisaematis (processed) 60 g; Pericarpium Citri Reticulatae 30 g; Semen Armeniacae Amarum (stir-baked) 60 g; Radix Scutellariae 60 g; Indigo Naturalis 21 g; Radix Trichosanthis 60 g; Fructus Aurantii (stir-baked with bran) 60 g; Fructus Crataegi (stir-baked) 45 g; Radix et Rhizoma Glycyrrhizae 15 g; Calculus Bovis Artifactus 3 g.

Procedure Pulverize Calculus Bovis Artifactus to powder. Isolate the volatile oil from Folium Perillae and Pericarpium Citri Reticulatae by distillation and collect the aqueous solution in another container. Decoct other thirteen ingredients with water twice, 2.5 hours for the first time and 1.5 hours for the second time. Combine the decoctions, filter, and combine the filtrate with the above aqueous solution, concentrate to a thin extract with a relative density of 1.32-1.35 (50℃). To the thin extract, add a quantity of sucrose, dextrin, and the powder of Calculus Bovis Artifactus, mix well, make granules and dry, add the above volatile oil, mix well, make to 900 g.

Description Greyish-green granules; taste, sweet, slightly bitter.

Identification (1) Pulverize 10 g of the granules, add 30 ml of ether and 1 ml of concentrated ammonia TS, in a 50 ml conical flask, stopper well and stand for 2 hours, shake constantly. Filter, add 1 ml of acidic ethanol (mix well 20 ml of ethanol and 1 ml of hydrochloric acid) to the filtrate,

and evaporate to dryness. Dissolve the residue in 0.5 ml of methanol as the test solution. Dissolve ephedrine hydrochloride CRS in methanol to produce a solution containing 5 mg per ml as the reference solution. Carry out the method for thin layer chromatography (Appendix Ⅵ B), using silica gel G as the coating substance and a mixture of chloroform, methanol and concentrated ammonia TS (40∶7∶1) as the mobile phase. Apply separately 10 μl of the test solution and 2 μl of the reference solution to the plate. After developing and removal of the plate, dry in air. Spray with ninhydrin TS, heat at 105℃ to the spots clear. The spot in the chromatogram obtained with the test solution corresponds in position and colour to the spot in the chromatogram obtained with the reference solution.

(2) To 4 g of the granules, pulverize to powder, add 30 ml of methanol, ultrasonicate for 20 minutes and filter. Evaporate the filtrate to dryness, dissolve the residue in 1 ml of methanol as the test solution. Dissolve baicalin CRS in methanol to produce a solution containing 1 mg per ml as the reference solution. Carry out the method for the thin layer chromatography (Appendix Ⅵ B), using silica gel G as the coating substance and the mixture of ethyl acetate, butanone, formic acid and water (5∶3∶1∶1) as the mobile phase. Apply separately 3 μl of the test solution and 2 μl of the reference solution to the plate. After developing and removal of the plate, dry in air, spray with 1% ferric chloride in ethanol. The spot in the chromatogram obtained with the test solution corresponds in position and colour to the spot in the chromatogram obtained with the reference solution.

(3) Dissolve hesperidin CRS in methanol to produce a solution containing 0.5 mg per ml as the reference solution. Carry out the method for the thin layer chromatography (Appendix Ⅵ B), using silica gel G prepared with a solution of 0.5% sodium hydroxide as the coating substance and the mixture of ethyl acetate, methanol and water (100∶17∶13) as the mobile phase. Apply separately 4 μl of each of the reference solution and the test solution obtained under the test of Identification (2). Develop about 3 cm, remove the plate, and allow to dry in air. Develop using the upper layer of the mixture of methyl benzene, ethyl acetate, formic acid and water (20∶10∶1∶1) as the mobile phase, after developing about 6 cm, remove the plate and dry in air. Spray with aluminium chloride TS. Examine under ultraviolet light at 365 nm. The fluorescent spot in the chromatogram obtained with the test solution corresponds in position and colour to the spot in the chromatogram obtained with the reference solution.

(4) To 30 g of the granules, ground to powder, add 40 ml of chloroform, ultrasonicate for 15 minutes and filter. Evaporate the filtrate to about 1 ml as the test solution. Dissolve indigotin CRS in chloroform to produce a solution containing 1 mg per ml as the reference solution. Carry out the method for the thin layer chromatography (Appendix Ⅵ B), using silica gel G as the coating substance and the mixture of methyl benzene, chloroform and acetone (5∶4∶1) as the mobile phase. Apply separately 10 μl of each of the test solution and the reference solution to the plate. After developing and removal of the plate, dry in air. The spot in the chromatogram obtained with the test solution corresponds in position and colour to the spot in the chromatogram obtained with the reference solution.

(5) To 15 g of the granules, ground to fine powder, add 30 ml of chloroform, ultrasonicate for 20 minutes, filter, evaporate the filtrate to dryness. Dissolve the residue in 1 ml of ethanol as the test solution. Dissolve cholic acid CRS in ethanol to produce a solution containing 1 mg per ml as the reference solution. Carry out the method for the thin layer chromatography (Appendix Ⅵ B), using silica gel G as the coating substance and a mixture of *n*-hexane, ethyl acetate, methanol, and acetic acid (20∶25∶3∶2) as the mobile phase. Apply separately 5 μl of each of the test solution and the reference solution to the plate. Spray 10% sulfuric acid in ethanol, heat to the spots clear. Examine under ultraviolet light at 365 nm. The fluorescent spot in the chromatogram obtained with the test solution corresponds in position and colour to the spot in the chromatogram obtained with the reference solution.

Other requirements Comply with the general requirements for granules (Appendix Ⅰ C).

Assay Carry out the method for high performance liquid chromatography (Appendix Ⅵ D).

Chromatographic system and system suitability Use octadecylsilane bonded silica gel as the stationary phase, a mixture of methanol, water and phosphoric (43∶57∶0.2) as the mobile phase. As detector a spectrophotometer set at 278 nm. The number of theoretical plates of the column is not less than 2000, calculated with the reference to the peak of baicalin.

Reference solution Dissolve a quantity of baicalin CRS, accurately weighed, in dilute ethanol TS to prepare a solution containing 8 μg per ml as the reference solution.

Test solution Weigh accurately 0.5 g of the granules, grounded to powder, to a stopper conical flask, add accurately 50 ml of dilute ethanol TS, weigh, heat under reflux for 1 hour, allow to stand to room temperature, weigh again and replenish the lost weight with dilute ethanol TS. Mix thoroughly, allow to stand filter the supernatant, and use the successive filtrate as the test solution.

Procedure Inject accurately 10 μl of each of the reference solution and the test solution into the column, and calculate the content.

It contents not less than 4.5 mg of baicalin ($C_{21}H_{18}O_{11}$) per pack, referred to Radix Scutellariae.

Action To clear *heat* and release the exterior, and relieve coughing and resolve phlegm.

Indications Headache, fever, coughing with expectoration of profuse phlegm, shortness of breath, swollen painful throat and restlessness in children due to affliction from external *wind-cold*, interior *heat* and poor appetite.

Usage and dosage 2.5 g, twice a day, taken after dissolved in boiling water; appropriate reduction of the dosage for children under 1 year old.

Strength 5 g per pack

Storage Preserve in tightly closed containers.

Baolong Wan
(抱龙丸)

Baolong Pills

Ingredients Poria 50 g; Halloysitum Rubrum 25 g; Herba Pogostemonis 38 g; Rhizoma Pinelliae Preparatum 31 g; Pericarpium Citri Reticulatae 25 g; Cortex Magnoliae Officinalis 25 g; Herba Menthae 31 g; Folium Perillae 31 g; Bombyx Batryticatus (processed with ginger) 31 g; Rhizoma Dioscorea 25 g; Concretio Silicea Bambusae 38 g; Lignum Santali Album 25 g; Radix Angelicae Dahuricae 25 g; Fructus Amomi 25 g; Radix Saposhnikoviae 31 g; Herba Schizonepetae 38 g; Rhizoma Typhonii 31 g; Radix Angelicae Pubescentis 31 g; Radix Paeoniae Alba 25 g; Fructus Chebulae (removed from seeds) 25 g; Fructus Piperis Longi 25 g; Rhizoma Atractylodis Macrocephalae

(stir-baked) 38 g; Rhizoma Chuanxiong (steamed with wine) 31 g; Radix Aucklandiae 25 g; Cinnabaris 47 g; Rhizoma Gastrodiae 25 g; Rhizoma Cyperi (processed) 25 g.

Procedure Levigate Cinnabaris to very fine powder and pulverize the other twenty-six ingredients to fine powder, sift and mix well. To each 100 g of the powder add 120-130 g of refined honey to make big honeyed pills.

Description Brown big honeyed pills; odour, aromatic; taste, sweet and pungent.

Identification (1) Microscopical: Starch granules triangular-ovoid or rectangular-rounded, 24-40 μm in diameter, hilum shortly cleft or V-shaped. Irregular branched masses colourless, dissolved in chloral hydrate TS; hyphae colourless or pale brown, 4-6 μm in diameter. Needle crystals of calcium oxalate fine, 10-32 μm long, irregularly filled in parenchymatous cells. Stone cells branched, with thickened walls and distinct striations. Secretory cells subrounded, containing pale brownish-yellow to reddish-brown secretion, the surrounding cells arranged radially. Fine needle crystals of calcium oxalate, scattered in mesophyll tissue. Prisms of calcium oxalate abundant in parenchyma. Sclerenchymatous cells of endocarp yellowish-brown or brownish-red, subpolygonal in surface view, walls thickened, containing silica bodies. Fragments of body-wall colourless, with very fine hyphae in surface. Irregular fine granules dark brownish-red, lustrous, with dark black edge.

(2) Grind well 4 g of the pills, cut into pieces, with 4 g of kieselguhr, add 30 ml of ether, ultrasonicate for 20 minutes, and filter. Evaporate the filtrate to dryness, dissolve the residue in 0.5 ml of ethyl acetate as the test solution. Prepare a solution with 0.2 g of Rhizoma Chuanxiong reference drug and 20 ml of ether as the reference drug solution in the same manner. Carry out the method for thin layer chromatography (Appendix Ⅵ B), using silica gel G as the coating substance and a mixture of *n*-hexane and ethyl acetate (9:1) as the mobile phase. Apply separately 4 μl of the test solution and 2 μl of the reference drug solution to the plate. After developing and removal of the plate, dry in air and examine under ultraviolet light at 365 nm. The fluorescent spots in the chromatogram obtained with the test solution correspond in position and colour to the spots in the chromatogram obtained with the reference drug solution.

Other requirements Comply with the general requirements for pills (Appendix Ⅰ A).

Action To expel *wind* and resolve phlegm, and invigorate the spleen and harmonize the stomach.

Indications Diarrhea due to disharmony between the spleen and stomach, and retention of excessive internal *wind-heat* and phlegm, with manifestations of indigestion of food or milk, nausea, vomiting, loose stools with undigested food.

Usage and dosage 1 pill for children under 1 year old; 2 pills for children of 1-2 years old, 2-3 times a day.

Strength 1.56 g per pill

Storage Preserve in tightly closed containers.

Bawei Chenxiang San
(八味沉香散)

Bawei Chenxiang Powder

Bawei Chenxiang Powder is a prescription used by Tibetan Nationality.

Ingredients Lignum Aquilariae Resinatum 200 g; Semen Myristicae 100 g; Fructus Choerospondiatis 100 g; Calx Pulveratum 100 g; Olibanum 100 g; Radix Aucklandiae 100 g; Fructus Chebulae (stewed) 100 g; Flos Gossampini 100 g.

Procedure Pulverize the above eight ingredients to fine powder, sift and mix well.

Description A yellowish-brown powder; odour, aromatic; taste, salty, astringent and slightly bitter.

Identification (1) Microscopical: Walls of fibre-tracheids slightly thickened, with bordered pits, pit apertures V-shaped or crossed. Irregular masses colourless or pale yellow, diffused with many minute granules from surface and edge, dissolved on long standing. Stone cells in groups, subrounded, long-ovate, rectangular or long slat-shaped, with distinct fine and dense pit-canals. Endocarp stone cells subrounded or elliptical, walls thickened, with distinct pit-canals, lumina filled with brownish-red granules. Pollen grains triangular, 50-60 μm in diameter, with 3 germinal apertures, and reticulatively sculptured on the surface.

(2) To 4 g of the powder, add 20 ml of ether, shake well, stopper closely, allow to stand for 24 hours and filter. Evaporate the filtrate to about 2 ml as the test solution. To 0.5 g of the Radix Aucklandiae reference drug, prepare a solution in the same manner as the reference drug solution. Carry out the method for the thin layer chromatography (Appendix Ⅵ B), using silica gel G as the coating substance and the mixture of cyclohexane and ethyl acetate (9:1) as the mobile phase. Apply separately 5 μl of each of the test solution and the reference solution to the plate. After developing and removal of the plate, dry in air. Spray with 5% vanillin in sulfuric acid, heat at 105℃ to visualize clearly. The spots in the chromatogram obtained with the test solution correspond in position and colour to the spots in the chromatogram obtained with the reference drug solution.

Other requirements Complies with the general requirements for powders (Appendix Ⅰ B).

Assay Carry out the method for high performance liquid chromatography (Appendix Ⅵ D).

Chromatographic system and system suitability Use octadecylsilane bonded silica gel as the stationary phase, a mixture of acetonitrile, methanol and water (43:10:45) as the mobile phase. As detector a spectrophotometer set at 225 nm. The number of theoretical plates of the column is not less than 5000, calculated with the reference to the peak of costunolide.

Reference solution Dissolve a quantity of costunolide CRS, accurately weighed, in methanol to prepare a solution containing 0.1 mg per ml as the reference solution.

Test solution To about 2 g of the powder, weigh accurately, in a conical flask. Add accurately 50 ml of ethyl acetate, weigh accurately, mix well. Heat under reflux for 3 hours, allow to cool, weigh again and replenish the lost weight with ethyl acetate. Measure accurately 5 ml of the successive filtrate and evaporate to dryness. Dissolve the residue in a small quantity of methylene chloride, filter,

wash the container and the filter with a small quantity of methylene chloride. Combine the washings and filtrate, evaporate to dryness. Dissolve the residue in methanol, and transfer to a 10 ml volumetric flask, dilute to volume with methanol, mix well, as the test solution.

Procedure Inject accurately 10 μl of each of the reference solution and the test solution in to the column, and calculate the content.
It contents not less than 0.80 mg of costunolide ($C_{15}H_{20}O_2$) per bag, referred to Radix Scutellariae.

Action To remove *heat* from the heart, to calm the mind, and to induce resuscitation.

Indications Impairment of consciousness and delirium in febrile diseases; angina pectoris in coronary heart disease.

Usage and dosage 0.9-1.5 g, 2-3 times a day.

Storage Preserved in well closed containers, protected from moisture.

Bawei Qingxin Chenxiang San
(八味清心沉香散)

Bawei Qingxin Chenxiang Powder

Bawei Qingxin Chenxiang Powder is a prescription used by Mongolian Nationality.

Ingredients Lignum Aquilariae Resinatum 180 g; Fructus Choerospondiatis 180 g; Lignum Santali Albi 90 g; Lignum Pterocarpi Santalini 90 g; Flos Carthami 90 g; Semen Myristicae 60 g; Concretio Silicea Bambusae 60 g; Radix Glehniae 60 g.

Procedure Pulverize the above eight ingredients to fine powder, sift and mix well.

Description A pale brownish-red powder; odour, aromatic; taste, slightly sour and bitter.

Identification (1) To 10 g of the powder, carry out the method for determination of volatile oil (Appendix Ⅹ D), separate the layer of volatile oil. Dissolve the volatile oil in 2 ml of ether as the test solution. Dissolve the sandal wood oil reference extract in ether to prepare a solution containing 10 μl per ml as the reference extract solution. Carry out the method for the thin layer chromatography (Appendix Ⅵ B), using silica gel G as the coating substance and a mixture of ether (60-90℃) and ethyl acetate (17∶3) as the mobile phase. Apply separately to the plate 10 μl of each of the above two solutions. After developing and remoral of the plate, dry in air. Spray with the *p*-dimethylaminobenzaldehyde solution (dissolve 0.25 g of *p*-dimethylaminobenzaldehyde in 50 g of glacial acetic acid, add 5 g of phosphoric acid and 20 ml of water, mix well), heat at 80-90℃ to the spots clear. The spots in the chromatogram obtained with the test solution correspond in position and colour to the spots in the chromatogram obtained with the reference extract solution.
(2) To 3 g of the powder, add two 15-ml quantities of acetone, stopper tightly, shake constantly for 15 minutes and filter, discard the filtrate. Extract the residue with 15 ml of 80% acetone by shaking constantly for 15 minutes, allow to stand. Imbibition the supernatant liquid is used as the test solution. Prepare the reference drug solution in the same manner using 0.5 g of Flos Carthami reference drug. Carry out the method for thin layer chromatography (Appendix Ⅵ B), using silica gel H containing carboxymethylcellulose sodium as the coating substance and a mixture of ethyl acetate, methanol, formic acid and water (7∶0.4∶2∶3) as the mobile phase. Apply separately to the plate 5 μl of each of the solutions. After developing and removal of the plate, dry in air. The strips in the chromatogram obtained with the test solution correspond in position and colour to the strips obtained with the reference drug solution.

Other requirements Complies with the general requirements for powders (Appendix Ⅰ B).

Action To remove *heat* from the heart and the lung, to regulate the flow of *qi*, and to induce sedation.

Indications Exuberant *fire* in the heart and the lung with distress in the chest, costal and hypochondriac stuffiness and pain, palpitation and shortness of breath.

Usage and dosage 3 g, 1-2 times a day.

Strength 15 g per pack

Storage Preserve in well closed containers, protected from moisture.

Bawei Tanxiang San
(八味檀香散)

Bawei Tanxiang Powder

Bawei Tanxiang Powder is a prescription used by Mongolian Nationality.

Ingredients Lignum Santali Albi 200 g; Gypsum Fibrosum 100 g; Flos Carthami 100 g; Radix et Rhizoma Glycyrrhizae 100 g; Flos Caryophylli 100 g; Radix Glehniae 100 g; Rhizoma Polygoni Bistortae 100 g; Fructus Vitis Viniferae 100 g.

Procedure Pulverize Gypsum Fibrosum, Flos Carthami, Radix et Rhizoma Glycyrrhizae, Radix Glehniae and Rhizoma Bistortae to coarse powder. Pulverize Fructus Vitis Viniferae with the coarse powder and dry. Pulverize Lignum Santali Albi and Flos Caryophylli with the above powder to fine powder, sift and mix well.

Description A brownish-yellow powder; odour, aromatic; taste, sweet, slightly astringent and cool.

Identification (1) Microscopical: Clusters of calcium oxalate about 40 μm in diameter. Crystal cells containing prisms of calcium oxalate, square or rectangular, with thickened, lignified walls and distinct striations. Fibre bundles surrounded by parenchymatous cells containing prisms of calcium oxalate, forming crystal fibres. Pollen grains spheroidal or ellipsoidal, about 60 μm in diameter, extine sping with 3 germinal apertures. Pollen grains triangular, about 16 μm in diameter. Vittae containing brownish-yellow secretion.
(2) To 50 g of the powder, carry out the method for determination of volatile oil (Appendix Ⅹ D), separate the layer of volatile oil. Dissolve the volatile oil in 2 ml of ether as the test solution. Dissolve the Sandal Wood Oil reference extract in ether to prepare a solution containing 10 μl per ml as the reference extract solution. Carry out the method for the thin layer chromatography (Appendix Ⅵ B), using silica gel G as the coating substance and a mixture of ether (60-90℃) and ethyl acetate (17∶3) as the mobile phase. Apply separately 10 μl of the test solution and 5 μl of the reference extract solution to the plate. After developing and removal of the plate, dry in air, spray with the *p*-dimethylaminobenzaldehyde solution (dissolve 0.25 g of *p*-dimethylaminobenzaldehyde in 50 g of glacial acetic acid, add 5 g of phosphoric acid and 20 ml of water, mix well.), heat

at 80-90℃ to the spots clear. The spots in the chromatogram obtained with the test solution correspond in position and colour to the spots in the chromatogram obtained with the reference extract solution.

(3) To 4 g of the powder, add 10 ml of 80% acetone, stopper tightly, shake constantly for 15 minuters and allow to stand; use the supernatant liquid as the test solution. Prepare a solution with 0.5 g of Flos Carthami reference drug in the same manner as the reference drug solution. Carry out the method for thin layer chromatography (Appendix Ⅵ B), using silica gel H mixed with carboxymethylcellulose sodium as the coating substance and a mixture of ethyl acetate, methanol, formic acid and water (7∶0.4∶2∶3) as the mobile phase. Apply separately to the plate 15 μl of the test solution and 5 μl of the reference drug solution. After developing and removal of the plate, dry in air. The spots in the chromatogram obtained with the test solution correspond in position and colour to the spots obtained with the reference drug solution.

(4) To 2.5 g of the powder, add 10 ml of ether, stopper tightly, shake constantly for minutes, filter, used the filtrate as the test solution. Dissolve the eugenol CRS in ether to prepare a solution containing 16 μl per ml as the reference solution. Carry out the method for the thin layer chromatography (Appendix Ⅵ B), using silica gel G mixed with sodium carboxymethylcellulose as the coating substance and a mixture of petroleum ether (60-90℃) and ethyl acetate (9∶1) as the mobile phase. Apply separately 10 μl of the test solution and 2 μl of the reference solution to the plate. After developing and removal of the plate, dry in air. Spray 5% vanilin in sulfuric acid and heat at 105℃ to the spots clear. The spot in the chromatogram obtained with the test solution corresponds in position and colour to the spot in the chromatogram obtained with the reference solution.

Other requirements Complies with the general requirements for powders (Appendix Ⅰ B).

Assay Carry out the method for high performance liquid chromatography (Appendix Ⅵ D).

Chromatographic system and system suitability Use octadecylsilane bonded silica gel as the stationary phase, a mixture of methanol, 0.2 mol/L ammonium acetate and glacial acetic acid (67∶33∶1) as the mobile phase. As detector a spectrophotometer set at 250 nm. The number of theoretical plates of the column is not less than 2500, calculated with the reference to the peak of glycyrrhizic acid.

Reference solution Dissolve a quantity of ammonium glycyrrhizate CRS, accurately weighed, in methanol to prepare a solution containing 0.15 mg per ml as the reference solution (0.15 mg per ml, 0.1469 mg calculated for glycyrrhizic acid).

Test solution Weigh accurately 1.5 g of the powder in a stopper conical flask, add accurately 50 ml of methanol, stopper, weigh, and ultrasonicate (power, 250 W; frequency, 20 kHz) for 45 minutes, cool. Weigh again, replenish the lost weight with methanol, mix thoroughly, filter. Measure accurately 25 ml of the successive filtrate and evaporate to dryness. Dissolve the residue in methanol and transfer to a 10 ml volumetric flask, dilute to volume with methanol, mix well.

Procedure Inject accurately 10 μl of each of the reference solution and the test solution in to the column, and calculate the content.

It contains not less than 1.8 mg of glycyrrhizic acid ($C_{42}H_{62}O_{16}$) per gram, referred to Radix et Rhizoma Glycyrrhizae.

Action To remove *heat* from the lung, relieve cough and promote expectoration of phlegm.

Indications *Heat* in the lung with cough and expectoration of purulent phlegm.

Usage and dosage 2-3 g, 1-2 times a day.

Strength 15 g per pack

Storage Preserve in well closed containers, protected from moisture.

Bazheng Heji
(八正合剂)

Bazheng Mixture

Ingredients Herba Dianthi 118 g; Semen Plantaginis (stir-baked) 118 g; Herba Polygoni Avicularis 118 g; Radix et Rhizoma Rhei 118 g; Talcum 118 g; Caulis Clematidis Armandii 118 g; Fructus Gardeniae 118 g; Radix et Rhizoma Glycyrrhizae Cum Melle 118 g; Medulla Junci 59 g.

Procedure Macerate Semen Plantaginis with 25% ethanol solution, collect the maceration solution. Percolate Radix et Rhizoma Rhei with 50% ethanol solution after macerating for 24 hours, carried out the percolation method described under liquid extractives and extractives (Appendix Ⅰ O), collect the percolation extract, and recover ethanol in vacuum. Decoct the other ingredients with water for 3 times, filter, combine the filtrate, and concentrate to about 1300 ml. Combine with the maceration solution of Semen Plantaginis and the percolation extract of Radix et Rhizoma Rhei, allow to stand, filter, concentrate to about 1000 ml. Add 3 g of sodium benzoate, dilute with water to 1000 ml, mix well and pack.

Description A dark brown liquid; taste, bitter and slightly sweet.

Identification (1) To 10 ml of the mixture, add 1 ml of hydrochloric acid, heat on a water bath for 30 minutes, and cool immediately. Extract with two 15-ml quantities of ether, combine the ether extract, and evaporate to dryness. Dissolve the residue in 1 ml of chloroform as the test solution. To 1 g of Radix et Rhizoma Rhei reference drug, add water and decoct for 30 minutes, filter and concentrate the filtrate to 10 ml. Prepare a solution as the reference drug solution in the same manner. Dissolve emodin CRS in chloroform to produce a solution containing 1 mg per ml as the reference solution. Carry out the method for thin layer chromatography (Appendix Ⅵ B), using silica gel H mixed with sodium carboxymethylcellulose as the coating substance and the upper layer of petroleum ether (30-60℃), ethyl formate and formic acid (15∶5∶1) as the mobile phase. Apply separately to the plate 5 μl of each of the test solution, the reference drug solution and the reference solution. After developing and removal of the plate, dry in air, expose to ammonia vapour to the spots clear. The spots in the chromatogram obtained with the test solution correspond in position and colour to the spots in the chromatograms obtained with the reference drug solution and the reference solution.

(2) Measure 20 ml of the mixture, add 60 ml of ethanol, mix well, allow to stand for 24 hours and filter. Collect the filtrate and remove ethanol. Extract with two 15-ml quantities of ether, and expel the ether extract. Extract the water layer with ethyl acetate for 3 times (20 ml for the first time, 15 ml for the second time and 10 ml for the third time), combine the extracts, and evaporate to dryness. Dissolve the residue in 1 ml of methanol as the test solution. Dissolve geniposide CRS in methanol to produce a solution

containing 1 mg per ml as the reference solution. Carry out the method for thin layer chromatography (Appendix Ⅵ B), using silica gel G as the coating substance and a mixture of acetone, ethyl acetate, formic acid and water (4∶6∶0.5∶0.5) as the mobile phase. Apply separately 5 μl of each of the test solution and the reference solution to the plate. After developing and removal of the plate, dry in air. Spray with 10% sulfuric acid in ethanol, and heat at 105℃ to the spots clear. The spot in the chromatogram obtained with the test solution corresponds in position and colour to the spot in the chromatogram obtained with the reference solution.

Relative density Not less than 1.02 (Appendix Ⅶ A).

pH value 4.0-6.0 (Appendix Ⅶ G).

Other requirements Complies with the general requirements for mixtures (Appendix Ⅰ J).

Assay Carry out the method for high performance liquid chromatography (Appendix Ⅵ D).

Chromatographic system and system suitability Use octadecylsilane bonded silica gel as the stationary phase, a mixture of acetonitrile and water (12∶88) as the mobile phase. As detector a spectrophotometer set at 238 nm. The number of theoretical plates of the column is not less than 1500, calculated with the reference to the peak of geniposide.

Reference solution Dissolve a quantity of geniposide CRS, accurately weighed, in methanol to prepare a solution containing 0.1 mg per ml as the reference solution.

Test solution Measure accurately 5 ml of the mixture in a 50 ml volumetric flask, dilute to the volume with dilute ethanol and mix well, centrifuge and transfer the supernatant as the test solution.

Procedure Inject accurately 10 μl of the reference solution and 5-10 μl of the test solution into the column, and calculate the content.

It contents not less than 0.60 mg of geniposide ($C_{17}H_{24}O_{10}$) per ml, referred to Fructus Gardeniae.

Action To clear *heat*, induce urination and relieve stranguria.

Indications Concentrated urine, difficulty and pain in micturition, dribble of urine, dry mouth and throat due to pouring of *damp-heat*.

Usage and dosage 15-20 ml, 3 times a day, taken after shaking thoroughly.

Strength (1) 100 ml (2) 120 ml (3) 200 ml per bottle

Storage Preserve in well closed containers, stored in a cool place.

Bazhen Wan
(八珍丸)

Bazhen Pills

Ingredients Radix Codonopsis 100 g; Rhizoma Atractylodis Macrocephalae (stir-baked) 100 g; Poria 100 g; Radix et Rhizoma Glycyrrhizae 50 g; Radix Angelicae Sinensis 150 g; Radix Paeoniae Alba 100 g; Rhizoma Chuanxiong 75 g; Radix Rehmanniae Praeparata 150 g.

Procedure Pulverize the above eight ingredients to fine powder, sift and mix well. To each 100 g of the powder add 40-50 g of refined honey and a quantity of water to make water-honeyed pills and dry; Alternatively, to each 100 g of the powder add 110-140 g of refined honey to make big honeyed pills.

Description Brownish-black water-honeyed pills or blackish-brown to black big honeyed pills; taste, sweet and slightly bitter.

Identification (1) Microscopical: Irregular branched masses colourless, dissolved in chloral hydrate TS; hyphae colourless or pale brown, 4-6 μm in diameter. Anastomosing laticiferous tubes 12-15 μm in diameter, containing minute granular substances. Needle crystals of calcium oxalate fine, 10-32 μm long, irregularly filling in parenchymatous cells. Clusters of calcium oxalate 18-32 μm in diameter, occured in parenchymatous cells, often arranged in rows or several in a cell. Fibre bundles surrounded by parenchymatous cells containing prisms of calcium oxalate, forming crystal fibres. Parenchymatous cells fusiform, with slightly thickened walls, showing very minute oblique crisscross striations. Parenchyma greyish-brown to blackish-brown, cells mostly shrunken, containing brown nucleus-like mass.

(2) Triturate 9 g of the big honeyed pills well with 4.5 g of kieselguhr, or pulverize 6 g of the water-honeyed pills, add 50 ml of water, grind well and add another 50 ml of water, stir for 20 minutes and filter in vacuum. Wash the residue with 50 ml of water, dry at 60 ℃ for 2 hours. Heat under reflux in a Soxhlet's extractor with 70 ml of ethanol on a water bath until the extract becomes colourless, cool, filter, and concentrate the filtrate to near dryness. Dissolve the residue in 1 ml of ethanol as the test solution. To 0.5 g of Radix et Rhizoma Glycyrrhizae reference drug add 30 ml of ethanol, heat under reflux on a water bath for 1 hour, filter, concentrate the filtrate to about 1 ml as the reference drug solution. Dissolve ammonium glycyrrhizinate CRS in ethanol to produce a solution containing 1 mg per ml as the reference solution. Carry out the method for thin layer chromatography (Appendix Ⅵ B), using silica gel G mixed with 0.8% sodium hydroxide solution as the coating substance and a mixture of ethyl acetate, formic acid, glacial acetic acid and water (15∶1∶1∶2) as the mobile phase. Apply separately to the plate 1 μl of each of the above three solutions. After developing and removal of the plate, dry in air. Spray with 10% sulfuric acid in ethanol, heat at 105℃ for 5-10 minutes and examine under ultraviolet light at 365 nm. The fluorescent spots in the chromatogram obtained with the test solution correspond in position and colour to the spots in the chromatogram obtained with the reference drug solution; and an orange-yellow fluorescent spot corresponds in position and colour to the spot in the chromatogram obtained with the reference solution.

(3) Triturate well 9 g of the big honeyed pills with 5 g of kieselguhr, or pulverize 6 g of the water-honeyed pills, add 40 ml of ethanol, macerate for 1 hour by shaking constantly, filter and evaporate the filtrate to dryness. Dissolve the residue in 20 ml of water and extract with three 20-ml quantities of *n*-butanol saturated with water. Combine the extracts, wash with three 10-ml quantities of water, discard the washings and evaporate the *n*-butanol solution to dryness. Dissolve the residue in 0.5 ml of ethanol as the test solution. Dissolve paeoniflorin CRS in ethanol to produce a solution containing 2 mg per ml as the reference solution. Carry out the method for thin layer chromatography (Appendix Ⅵ B), using silica gel G as the coating substance and a mixture of chloroform, ethyl acetate, methanol and formic acid (40∶5∶10∶0.2) as the mobile phase. Apply separately 3 μl of each of the above two solutions to the plate. After developing and removal of the plate, dry in air, spray with 5% vanillin in sulfuric acid and heat to the spots clear. The spot in the chromatogram obtained with the test solution corresponds in position and colour to the spot in the chromatogram obtained with the reference solution.

Other requirements Comply with the general requirements for pills (Appendix I A).

Assay Carry out the method for high performance liquid chromatography (Appendix VI D)

Chromatographic system and system suitability Use octadecylsilane bonded silica gel as the stationary phase, a mixture of acetonitrile and water (17 : 83) as the mobile phase. As detector a spectrophotometer set at 230 nm. The number of theoretical plates of the column is not less than 2000, calculated with the reference to the peak of paeoniflorin.

Reference solution Dissolve a quantity of paeoniflorin CRS, accurately weighed, in dilute ethanol to prepare a solution containing 40 μg per ml as the reference solution.

Test solution Pulverize 0.3 g of water-honeyed pills to fine powder, accurately weighed, or cut 0.5 g of big honeyed pills obtained under the weight variation test into pieces, accurately weighed, in a stopper conical flask, add accurately 20 ml of dilute ethanol, stopper tightly, and weigh. Ultrasonicate for 1 hour and stand to cool, weigh again and replenish the loss of the weight with dilute ethanol, mix well, centrifuge, filter and use the successive filtrate as the test solution.

Procedure Inject accurately 10 μl of each of the reference solution and the test solution into the column, and calculate the content.

It contains not less than 0.64 mg of paeoniflorin ($C_{23}H_{28}O_{11}$) per gram of water-honeyed pills or 3.6 mg per big honeyed pill, referred to Radix Paeoniae Alba.

Action To reinforce *qi* and nourish blood.

Indications Sallow complexion, anorexia, lassitude and menorrhagia due to a deficiency of *qi* and blood.

Usage and dosage 6 g of water-honeyed pills or 1 big honeyed pill, twice a day.

Strength 9 g per big honeyed pill

Storage Preserve in tightly closed containers.

Bazhen Yimu Wan
(八珍益母丸)

Bazhen Yimu Pills

Ingredients Herba Leonuri 200 g; Radix Codonopsis 50 g; Rhizoma Atractylodis Macrocephalae (stir-baked) 50 g; Poria 50 g; Radix et Rhizoma Glycyrrhizae 25 g; Radix Angelicae Sinensis 100 g; Radix Paeoniae Alba (stir-baked with wine) 50 g; Rhizoma Chuanxiong 50 g; Radix Rehmanniae Praeparata 100 g.

Procedure Pulverize the above nine ingredients to fine powder, sift and mix well. To each 100 g of powder add 40-50 g of refined honey and a quantity of water to make water-honeyed pills and dry. Alternatively, add 120-140 g of refined honey to make small honeyed pills or big honeyed pills.

Description Brownish-black water-honeyed pills, small honeyed pills or big honeyed pills; odour, slightly aromatic; taste, sweet and slightly bitter.

Identification (1) Microscopical: Irregular branched masses colourless, dissolved in chloral hydrate solution TS; hyphae colourless or plae brown, 4-6 μm in diameter. Anastomosing laticiferous tubes 12-15 μm in diameter, containing minute granular substances. Non-glandular hairs 1-3 celled, slightly curved, with warty walls. Needle crystals of calcium oxalate fine, 10-32 μm long, irregularly filling in parenchymatous cells. Clusters of calcium oxalate 18-32 μm in diameter, scattered in parenchymatous cells, often arranged in rows or several clusters in a cell. Fibre bundles surrounded by parenchymatous cells containing prisms of calcium oxalate, forming crystal fibres. Parenchyma greyish-brown to blackish-brown, cells mostly shrunken and each containing a brown nucleus-like mass. Parenchymatous cells spindle-shaped, with slightly thickened walls, showing very fine oblique crisscross striations.

(2) Triturate well 9 g of the small honeyed pills or the big honeyed pills with 5 g of kieselguhr, grind and mix well, or pulverize 6 g of the water-honeyed pills, add 40 ml of ethanol, macerate for 1 hour with frequently shaking, and filter. Evaporate the filtrate to dryness and dissolve the residue in 20 ml of water, extract with three 20-ml quantities of *n*-butanol saturated with water, combine the *n*-butanol extracts, wash with water for three times. Discard the washings and evaporate the *n*-butanol solution to dryness. Dissolve the residue in 0.5 ml of ethanol as the test solution. Dissolve paeoniflorin CRS in ethanol to produce a solution containing 2 mg per ml as the reference solution. Carry out the method for thin layer chromatography (Appendix VI B), using silica gel G as the coating substance and a mixture of chloroform, ethyl acetate, methanol and formic acid (40:5:10:0.2) as the mobile phase. Apply separately to the plate 3 μl of each of the above two solutions. After developing and removal of the plate, dry in air. Spray with 5% vanillin in sulfuric acid and heat to the spots clear. The spot in the chromatogram obtained with the test solution corresponds in position and colour to the spot in the chromatogram obtained with the reference solution.

Other requirements Comply with the general requirements for pills (Appendix I A).

Assay Carry out the method for high performance liquid chromatography (Appendix VI D).

Chromatographic system and system suitability Use octadecylsilane bonded silica gel as the stationary phase, a mixture of acetonitrile and 0.1% phosphoric acid (13 : 87) as the mobile phase. As detector a spectrophotometer set at 230 nm. The number of theoretical plates of the column is not less than 5000, calculated with the reference to the peak of paeoniflorin.

Reference solution Dissolve a quantity of paeoniflorin CRS, accurately weighed, in dilute ethanol to prepare a solution containing 15 μg per ml as the reference solution.

Test solution Triturate about 0.5 g of the water-honeyed pills, or cut about 1 g of the small honeyed pills into pieces, accurately weighed; or weigh accurately about 1 g of the big honeyed pills, obtained under the test of weight variation, cut into pieces and mixed well, in a stopper conical flask. Add accurately 25 ml of dilute ethanol, stopper well, weigh and ultrasonicate for 40 minutes. Allow to stand to room temperature, weigh again and replenish the lost weight with dilute ethanol. Mix thoroughly, centrifuge and use the supernatant as the test solution.

Procedure Inject accurately 10 μl of each of the reference solution and the test solution into the column, and calculate the content.

It contents not less than 0.40 mg of paeoniflorin ($C_{23}H_{28}O_{11}$) per gram of water-honeyed pills, 0.27 mg per gram of small honeyed pills or 2.5 mg per big honeyed pill, referred to Radix Paeoniae Alba.

Action To replenish *qi* and nourish blood, and promote blood circulation to regulate menstruation.

Indications Menstrual disorders due to a deficiency of *qi* and blood accompanied with blood stagnation, with manifestations of delayed menstrual cycle, scanty menstrual blood, persistent dribbling of menstrual blood, listlessness and lassitude.

Usage and dosage 6 g of water-honeyed pills, 9 g of small honeyed pills or 1 big honeyed pill, twice a day.

Strength 9 g per big honeyed pill

Storage Preserve in tightly closed containers.

Beiling Jiaonang
(贝羚胶囊)

Beiling Capsules

Ingredients Bulbus Fritillariae Cirrhosae; Cornu Saigae Tataricae; Hyodeoxycholic Acid; Moschus; Lignum Aquilariae Resinatum; Concretio Silicea Bambusae (prepared, levigated); Lapis Chloriti (calcined, levigated); Borax (stir-baked).

Procedure Pulverize Cornu Saigae Tataricae to fine powder, and pulverize the other seven ingredients to fine powders and sift respectively. Except powder of Lapis Chloriti, mix well with 68 g of starch, triturate well with powder of Lapis Chloriti in portions, sift, add 6 g of magnesium stearate, mix well and make capsules.

Description Capsules containing soil-yellow powder; odour, characteristic; taste, slightly bitter.

Identification (1) Microscopical: Irregular masses slightly lustrous, evenly distributed with slit-like or oblong fissures. Walls of fibre tracheids slightly thickened, with bordered pits, pit apertures V-shaped or crossed.
(2) To about 15 mg of the contents add 2 ml of 60% acetic acid, stir thoroughly, and filter. To the filtrate add 2 ml of fresh prepared 1% furfural solution, and mix well. Divide the solution into tube A and B respectively. Add 10 ml of sulfuric acid solution (7→10) to tube A and 10 ml of sulfuric acid solution (4→10) to tube B, heat at 70℃ on a water bath for several minutes. The solution in tube A exhibits a red to purplish-red colour, and the solution in tube B should be colourless.
(3) Place 0.3 g of the contents in a stopper test tube, extract with two 2-ml quantities of ether, and filter. Evaporate the filtrate to dryness, dissolve the residue in 0.5 ml of ether as the test solution. Dissolve muscone CRS in ether to produce a solution containing 0.1 mg per ml as the reference solution. Carry out the method for gas chromatography (Appendix Ⅵ E), using a 2 m long column packed with a mixture of 1.64% polyethylene glycol (PEG)-20M and 1.32% methyl polysiloxane (SE-30) as the stationary phase, maintain the column temperature at 180℃. Inject respectively a quantity of the reference solution and the test solution into the column. The retention time of the peak obtained with the test solution and that of the reference solution is concordant with each other.

Other requirements Comply with the general requirements for capsules (Appendix Ⅰ L).

Action To clear *heat* and resolve phlegm, and relieve coughing and asthma.

Indications Coughing and asthma due to *phlegm-heat* accumulated in the lung; pneumonia and asthmatic bronchitis in children and chronic bronchitis in adults with above symptoms.

Usage and dosage 0.6 g, 3 times a day; 0.15-0.6 g for children; appropriate reduction of the dosage for children under 1 year old twice a day.

Precaution Contraindicated patients with loose stool.

Strength 0.3 g per capsule

Storage Preserve in tightly closed containers.

Bidouyan Koufuye
(鼻窦炎口服液)

Bidouyan Mixture

Ingredients Flos Magnoliae; Herba Schizonepetae; Herba Menthae; Radix Platycodonis; Radix Bupleuri; Fructus Xanthii; Radix Angelicae Dahuricae; Rhizoma Chuanxiong; Radix Scutellariae; Fructus Gardeniae; Poria; Caulis Clematidis Armandii; Radix Astragali; Herba Gentianae.

Procedure Steam distill Flos Magnoliae, Herba Schizonepetae, Herba Menthae and Radix Bupleuri and collect the aromatic aqueous liquid; decoct the drug residue and the other ingredients with water for 3 times, 1 hour for each time, combine the decoction, filter and concentrate the filtrate to a quantity, stand, filter the supernatant, add the above aromatic aqueous liquid and a quantity of preservative, stir well. Add water to an appropriate volumn; stir well, filter, pack and sterilize.

Description A clear, dark brownish-yellow to dark brown liquid; odour, aromatic; taste, bitter.

Identification (1) Adjust 20 ml of the mixture with 20% solution of sodium hydrochloride to pH 12, extract with two 20-ml quantities of chloroform, combine the extracts, evaporate to dryness, dissolve the residue with 1 ml of chloroform to produce a solution as the test solution. Decoct 1 g of Radix Angenlicae Dahuricae reference drug with water for 30 minutes, allow to cool, filter, prepare a solution in the same manner as the reference drug solution. Carry out the method for thin layer chromatography (Appendix Ⅵ B), using silica gel G as the coating substances and a mixture of chloroform and methanol (9:1) as the mobile phase. Apply separately 10 μl of each of the above two solutions to the plate. After developing in a chamber pre-equilibrated with ammonia vapour and removal of the plate, dry in air, examine under ultraviolet light at 365 nm. The spots in the chromatogram obtained with the test solution correspond in position and colour to the spots in the chromatogram obtained with the reference drug solution.
(2) Extract 10 ml of the mixture, adjusted to pH 2 with dilute hydrochloric acid TS, with two 20-ml quantities of ethyl acetate, combine the extracts and evaporate to dryness, dissolve the residue with 2 ml of methanol as the test solution. Dissolve baicalin CRS in methanol to produce a solution containing 2 mg per ml as the reference solution. Carry out the method for thin layer chromatography (Appendix Ⅵ B), using silica gel G as the coating substances and the upper layer of a mixture of butyl acetate, formic acid and water (7:4:3) as the mobile phase. Apply separately 2 μl of each of the above two solutions to the plate. After developing and removal of the plate, dry in air. Spray with 2% ferric chloride in ethanol. The spot in the chromatogram obtained with the test solution corresponds in position and colour to the spot in the chromatogram obtained with the reference solution.

Relative density Not less than 1.03 (Appendix Ⅶ A).

pH value 4.6-6.0 (Appendix Ⅶ G).

Other requirements Complies with the general requirements

for mixtures (Appendix Ⅰ J).

n-Butanol extractives Extract 20 ml of the mixture, measured accurately, with four 20-ml quantities of *n*-butanol saturated with water in a separator, combine the extracts in a evaporating dish, dried to constant weight, evaporate to dryness on a water bath and then dry at 105℃ for 3 hours, move to a desiccator, allow to cool for 30 minutes, weigh rapidly accurately and calculate.

It contains not less than 1.2 per cent *n*-butanol-soluble extractives.

Assay Carry out the method for high performance liquid chromatography (Appendix Ⅵ D).

Chromatographic system and system suitability Use octadecylsilane bounded silica gel as the stationary phase and a mixture of methanol, water and phosphoric acid (47∶53∶0.2) as the mobile phase. As detector a spectrophotometer set at 278 nm. The number of theoretical plates of the column is not less than 3000, calculated with the reference to the peak of baicalin.

Reference solution Weigh accurately a quantity of baicalin CRS, dissolve in methanol to prepare a solution containing 60 μg per ml as the reference solution.

Test solution Measure accurately 1 ml of the mixture, in a 50 ml volumetric flask, dilute to volume with water, mix well, centrifuge and use the supernatant as the test solution.

Procedure Inject accurately 10 μl of each of the reference solution and the test solution into the column and calculate the contant.

It contains not less than 1.0 mg of baicalin ($C_{21}H_{18}O_{11}$) per ml, referred to Radix Scutellariae.

Action To disperse *wind-heat*, clear *heat* and drain *dampness*, and free nasal orifices.

Indications Stuffy nose and thick yellow nasal discharge due to invasion of the lung by *wind-heat* and retention of *damp-heat*; acute or chronic rhinitis and nasosinusitis with above symptoms.

Usage and dosage 10 ml, 3 times a day; 20 days for one course of treatment.

Strength 10 ml per vial

Storage Preserve in tightly closed containers, protected from light and store in a cool place.

Binglang Sixiao Wan (Damiwan)
(槟榔四消丸，大蜜丸)

Binglang Sixiao Big Honeyed Pills

Ingredients Semen Arecae 200 g; Radix et Rhizoma Rhei (stir-baked with wine) 400 g; Semen Pharbitidis (stir-baked) 400 g; Fructus Gleditsiae Abnormalis (stir-baked) 200 g; Rhizoma Cyperi; (processed with vinegar) 200 g; Faeces Trogopterori (stir-baked with vinegar) 200 g.

Procedure Pulverize the above six ingredients to fine powder, sift and mix well. To each 100 g of the powder add 110-130 g of refined honey to make big honeyed pills.

Description Yellowish-brown big honeyed pills; odour, slightly aromatic; taste, sweet, bitter and slightly pungent.

Identification (1) Microscopical: Clusters of calcium oxalate big 60-140 μm in diameter. Secretory cells subrounded, containing yellowish-brown to reddish-brown secretion, surrounded by radially arranged cells. Fibre bundles reddish-brown or yellowish-brown, slender, walls extremely thick-ened. Fibre bundles pale yellow, surrounded by cells containing prisms of calcium oxalate and a few of clusters, forming crystal fibres, which frequently accompanied by subsquare sclerenchymatous cells. Palisade cells of testa pale brown or brown, 48-80 μm long. Fragments of endosperm cells colourless, walls relatively thickened, with numerous large subrounded pits.

(2) To 2 g of pills, cut into pieces, add 20 ml of hydrochloric acid (1→10), ultrasonicate for 5 minutes. Add 10 ml of chloroform, heat under reflux on the water bath for 1 hour, cool immediately. Separate chloroform extracts, extract the acidified solution with two 15-ml quantities of chloroform, combine the chloroform solution and evaporate to dryness. Dissolve the residue in 2 ml of chloroform as the test solution. Prepare a solution with 0.2 g of Radix et Rhizoma Rhei reference drug in the same manner as the reference drug solution. Carry out the method for thin layer chromatography (Appendix Ⅵ B), using silica gel H mixed with sodium carboxymethylcellulose as the coating substance and the upper layer of a mixture of petroleum ether (30-60℃), ethyl formate and formic acid (15∶5∶1) as the mobile phase. Apply separately 4 μl of each of the above two solutions to the plate. After developing and removal of the plate, dry in air, and examine under ultraviolet light at 365 nm. The five orange fluorescent spots in the chromatogram obtained with the test solution correspond in position and colour to the spots in the chromatogram obtained with the reference drug solution. The spots turn to red on exposure to ammonia vapour.

(3) Triturate 18 g of the pills, in pieces with 10 g of kieselguhr, add 5 ml of concentrated ammonia TS and 80 ml of chloroform, ultrasonicate for 30 minutes, filter, extract the filtrate with 10 ml of dilute hydrochloric acid TS and 20 ml of water. Separate the acidic layer, adjust to pH 8-9 with concentrated ammonia TS, extract with two 10-ml quantities of chloroform, combine the chloroform solutions and evaporate to dryness. Dissolve the residue in 1 ml of chloroform as the test solution. To 1 g of Semen Arecae reference drug, add 30 ml of chloroform and 1 ml of concentrated ammonia TS, and prepare the reference drug solution in the same manner. Carry out the method for thin layer chromatography (Appendix Ⅵ B), using silica gel G mixed with sodium carboxymethylcellulose as the coating substance and the mixture of cyclohexane, ethyl acetate and concentrated ammonia TS (7.5∶7.5∶0.2) as the mobile phase. Apply separately 20 μl of the test solution and 10 μl of the reference drug solution to the plate. After developing in a chamber equilibrated with ammonia vapour and removal of the plate, dry in air, spray with potassium dilute iodobismuthate TS solution. The spots in the chromatogram obtained with the test solution correspond in position and colour to the spots in the chromatogram obtained with the reference drug solution.

(4) To 20 g of pills, cut into pieces. Carry out the method for determination of volatile oil (Appendix Ⅹ D). Add water through the top of reflux condenser until the graduated tube is filled and overflows to flask about 100 ml. Add 2 ml of ethyl acetate through the top of the apparatus, heat to boil and keep boiling gently for 2 hours, allow to stand to room temperature, separate the ethyl acetate layer as the test solution. Dissolve α-cyperone CRS in ethyl acetate to produce a solution containing 1 μl per ml as the reference solution. Carry out the method for thin layer chromatography (Appendix Ⅵ B), using silica gel G mixed with sodium carboxymethylcellulose as the coating substance and a mixture of cyclohexane and ethyl acetate (9∶1) as the mobile phase. Apply separately 5 μl of each of the above two solutions to the plate. After developing in a chamber pre-equilibrated with ammonia evapour and remoral of the plate,

dry it in air. Spray with dinitrophenylhydrazine TS, allow to stand for a while. The spot in the chromatogram obtained with the test solution corresponds in position and colour to the spot in the chromatogram obtained with the reference solution.

Other requirements Comply with the general requirements for pills (Appendix Ⅰ A).

Assay Carry out the method for high performance liquid chromatography (Appendix Ⅵ D).

Chromatographic system and system suitability Use octadecylsilane bonded silica gel as the stationary phase, a mixture of methanol and 0.1% phosphoric acid (85∶15) as the mobile phase. As detector a spectrophotometer set at 254 nm. The number of theoretical plates of the column is not less than 1500, calculated with the reference to the peak of emodin.

Reference solution Dissolve a quantity of emodin CRS and chrysophanol CRS, weighed accurately, in a mixture of ethyl acetate and dehydrated ethanol (1∶2) to prepare a solution containing 10 μg of emodin CRS and 25 μg of chrysophanol CRS per ml as the reference solution.

Test solution Cut the big honeyed pills, obtained under the test of weight variation, into pieces and mixed well. To about 2 g, weigh accurately, in the flask with stopper. add accurately 50 ml of methanol, stopper well, weigh and ultrasonicate to disintegration, then heat under reflux on the water bath for 1 hour, allow to stand to room temperature, weigh again and replenish the lost weight with methanol. Mix thoroughly, filter and measure accurately 5 ml of the successive filtrate, evaporate the successive filtrate to dryness and dissolve the residue in 10 ml of the hydrochloric solution(1→10). Ultrasonicate (power, 300 W; frequency, 50 kHz) for 5 minutes, add 10 ml of chloroform, heat under reflux on the water bath for 1 hour, cool immediately. Transfer to separator, separate water layer, extract the acidified solution with two 15-ml quantities of chloroform, combine the chloroform extracts and evaporate to dryness. Dissolve the residue in a mixture of ethyl acetate and dehydrated ethanol (1→3), transfer to 10 ml volumetric flask, and dilute to volume, mix thoroughly as the test solution.

Procedure Inject accurately 10 μl of each of the reference solution and the test solution into the column, and calculate the content.

It contents not less than 8.0 mg of the total of emodin ($C_{15}H_{10}O_5$) and chrysophanol ($C_{15}H_{10}O_4$) per pill, referred to Radix et Rhizoma Rhei.

Action To promote digestion to remove retained food, and promote *qi* flow to clear retained water.

Indications Indigestion due to retention of food, phlegm and morbid fluid, with manifestations of indigestion, fullness in the stomach and abdomen, belching and casting up gastric acid and constipation.

Usage and dosage 1 pill, twice a day.

Precaution Contraindicated for pregnant women.

Strength 9 g per big honeyed pill

Storage Preserve in tightly closed containers.

Binglang Sixiao Wan (Shuiwan) (槟榔四消丸，水丸)

Binglang Sixiao Watered Pills

Ingredients Semen Arecae 200 g; Radix et Rhizoma Rhei (stir-baked with wine) 400 g; Semen Pharbitidis (stir-baked) 400 g; Fructus Gleditsiae Abnormalis (stir-baked) 50 g; Rhizoma Cyperi (processed with vinegar) 200 g; Faeces Trogopterori (stir-baked with vinegar) 200 g.

Procedure Pulverize the above six ingredients to fine powder, sift and mix well. Make pills with water, and dry.

Description Pale brown to brown watered pills, odour, slightly aromatic; taste, bitter and pungent.

Identification (1) Microscopical: Clusters of calcium oxalate big, 60-140 μm in diameter. Secretory cells subrounded, containing yellowish-brown to reddish-brown secretion, surrounded by radially arranged cells. Fibre bundles reddish-brown or yellowish-brown, slender, walls extremely thickened. Fibre bundles pale yellow, surrounded by cells containing prisms of calcium oxalate and a few of clusters, forming crystal fibres, which frequently accompanied with subsquare sclerenchymatous cells. Palisade cells of testa pale brown or brown, 48-80 μm long. Fragments of endosperm cells colourless, walls relatively thickened, with numerous large subrounded pits.

(2) Macerate 0.5 g of pills, pulverized to fine powder, in 20 ml of methanol for 1 hour, filter. Evaporate 5 ml of the filtrate to dryness, dissolve the residue in 10 ml of water, add 1 ml of hydrochloric acid, heat under reflux on a water bath for 30 minutes, cool immediately. Extract with two 10-ml quantities of ether, combine the ether solutions and evaporate to dryness. Dissolve the residue in 1 ml of chloroform as the test solution. Prepare a solution with 0.1 g of Radix et Rhizoma Rhei reference drug in the same manner as the reference drug solution. Carry out the method for thin layer chromatography (Appendix Ⅵ B), using silica gel H mixed with sodium carboxymethylcellulose as the coating substance and the upper layer of a mixtare of petroleum ether (30-60℃), ethyl formate and formic acid (15∶5∶1) as the mobile phase. Apply separately 4 μl of each of the above two solutions to the plate. After developing and removal of the plate, dry in air, and examine under ultraviolet light at 365 nm. The five orange fluorescent spots in the chromatogram obtained with the test solution correspond in position and colour to the spots in the chromatogram obtained with the reference drug solution. The spots turn to red on exposure to ammonia vapour.

(3) Triturate 10 g of the pills to fine powder, add 5 ml of concentrated ammonia TS and 80 ml of chloroform, ultrasonicate for 30 minutes, filter. extract the filtrate with 10 ml of dilute hydrochloric acid TS and 20 ml of water. Separate the acidic layer, adjust to pH 8-9 with concentrated ammonia TS, extract with two 10-ml quantities of chloroform, combine the chloroform solutions and evaporate to dryness. Dissolve the residue in 1 ml of chloroform as the test solution. To 1 g of Semen Arecae reference drug, add 30 ml of chloroform and 1 ml of concentrated ammonia TS, and prepare the reference drug solution in the same manner. Carry out the method for thin layer chromatography (Appendix Ⅵ B), using silica gel G mixed with sodium carboxymethylcellulose as the coating substance and the mixture of cyclohexane, ethyl acetate and concentrated ammonia TS (15∶15∶0.4) as the mobile phase. Apply separately 20 μl of the test solution and 10 μl of the reference drug solution to the plate. After developing in a chamber

pre-equilibrated with ammonia vapour and removal of the plate, dry in air, spray with potassium dilute iodobismuthate TS solution. The spots in the chromatogram obtained with the test solution correspond in position and colour to the spots in the chromatogram obtained with the reference drug solution.

(4) Triturate 10 g of the pills to fine powder, carry out the method for determination of volatile oil (Appendix Ⅹ D). Add water through the top of reflux condenser until the graduated take is filled and overflows to flask about 100 ml. Add 2 ml of ethyl acetate through the top of the apparatus, heat to boil and keep boiling gently for 2 hours, allow to stand to room temperature, separate the ethyl acetate layer as the test solution. Dissolve α-cyperone CRS in ethyl acetate to produce a solution containing 1 μl per ml as the reference solution. Carry out the method for thin layer chromatography (Appendix Ⅵ B), using silica gel G mixed with sodium carboxymethylcellulose as the coating substance and a mixture of cyclohexane and ethyl acetate (9∶1) as the mobile phase. Apply separately 5 μl of each of the above two solutions to the plate. After developing and removal of the plate, dry in air. Spray with dinitrophenylhydrazine TS, allow to stand for a while. The spot in the chromatogram obtained with the test solution corresponds in position and colour to the spot in the chromatogram obtained with the reference solution.

Other requirements Comply with the general requirements for pills (Appendix Ⅰ A).

Assay Carry out the method for high performance liquid chromatography (Appendix Ⅵ D).

Chromatographic system and system suitability Use octadecylsilane bonded silica gel as the stationary phase, a mixture of methanol and 0.1% phosphoric acid (85∶15) as the mobile phase. As detector a spectrophotometer set at 254 nm. The number of theoretical plates of the column is not less than 1500, calculated with the reference to the peak of emodin.

Reference solution Dissolve a quantity of emodin CRS and chrysophanol CRS, accurately weighed, in a mixture of ethyl acetate and dehydrated ethanol (1∶2) to prepare a solution containing 10 μg of emodin and 25 μg of chrysophanol per ml as the reference solution.

Test solution Triturate 6 g of the Pills to fine Powder, mix well. To about 1 g, weighed accurately, in a stopper flask add accurately 50 ml of methanol, weigh, then heat under reflux for 1 hour, allow to stand to room temperature, weigh again and replenish the lost weight with methanol. Mix thoroughly, filter and measure accurately 5 ml of the successive filtrate, evaporate the successive filtrate to dryness and dissolve the residue in 10 ml of the hydrochloric solution (1→10). Ultrasonicate (power 300 W; frequency 50 kHz) for 5 minutes, add 10 ml of chloroform, heat under reflux on the water bath for 1 hour, cool immediately. Transfer to separator, separate water layer, extract the acidified solution with two 15-ml quantities of chloroform, combine the chloroform solutions and evaporate to dryness. Dissolve the residue in a mixture of ethyl acetate and dehydrated ethanol (1∶2), transfer to 10 ml volumetric flask, and dilute to volume, mix thoroughly as the test solution.

Procedure Inject accurately 10 μl of each of the reference solution and the test solution into the column, and calculate the content.

It contents not less than 1.8 mg of the total amount of emodin ($C_{15}H_{10}O_5$) and chrysophanol ($C_{15}H_{10}O_4$) per gram, referred to Radix et Rhizoma Rhei.

Action To promote digestion to remove retained food, and promote *qi* flow to clear retained water.

Indications Indigestion due to retention of food phlegm or morbid fluid, with manifestations of indigestion, fullness in the stomach and abdomen, belching and casting up gastric acid and constipation.

Usage and dosage 6 g, twice a day.

Precaution Contraindicated for pregnant women.

Storage Preserve in tightly closed containers.

Bingpeng San
(冰硼散)

Bingpeng Powder

Ingredients Borneolum Syntheticum 50 g; Borax (calcined) 500 g; Cinnabaris 60 g; Natrii Sulfas Exsiccatus 500 g.

Procedure Levigate Cinnabaris to very fine powder, pulverize Borax to fine powder and triturate Borneolum Syntheticum with the above powders and Natrii Sulfas Exsiccatus, sift and mix well.

Description A pink powder; odour, aromatic; taste, pungent and cool.

Identification (1) To 1 g add 6 ml of water, shake, acidify with hydrochloric acid and filter. Moisten a strip of *tumeric* paper with 3 ml of the filtrate, an orange-red colour is produced, the colour darkens on dryness and turns greenish-black on exposure to ammonia vapour.

(2) To the remained filtrate obtained under Identification test (1), add 1-2 drops of barium chloride TS, a white precipitate is produced, which, after separating, is insoluble in hydrochloric acid.

(3) Place 1 g in a test tube, add 10 ml of water and shake vigorously, a vermilion precipitate is rapidly produced at the bottom of the test tube. Separate a small quantity of the precipitate, moisten with hydrochloric acid, rub on a smooth copper plate, a silver lustre is produced, and disappears on heating.

(4) Carry out the method under the Assay, the retention time of the peaks in the chromatogram obtained with the test solution correspond to that of the peaks in the chromatogram obtained with the reference solutions.

Other requirements Complies with the general requirements for powders (Appendix Ⅰ B).

Assay ***Cinnabaris*** Dissolve about 3 g of the powder, weighed accurately, with 10 ml of sulfuric acid and 1.5 g of potassium nitrate in a conical flask by heating. Allow to cool, and 50 ml of water and 1% potassium permanganate solution until a pink colour is produced, then add dropwise 2% ferrous sulfate solution until the pink colour disappears. Add 2 ml of ammonium ferric sulfate IS and titrate with ammonium thiocyanate (0.1 mol/L) VS. 1 ml of ammonium thiocyanate (0.1 mol/L) VS is corresponds to 11.63 mg of mercuric sulfide (HgS).

It contains 40-60 mg of mercuric sulfide (HgS) per gram, referred to cinnabaris.

Borneolum Syntheticum Carry out the method for gas chromatography (Appendix Ⅵ E).

Chromatographic system and system suitability Use an elasticity quartz capillary column (0.25 mm in internal diameter, 0.25 μm in film thicked, and 30 meter long) packed with polyethylene glycol (PEG)-20M as the stationary phase; Column temperature: initial temperature at 100℃; increase at 10℃ per minute to 200℃; split

injection, split ratio, 30:1. The number of theoretical plates of the column is not less than 5000, calculated with the reference to the peak of (±)-borneol.

Correction factor Dissolve a quantity of tetradecane in dehydrated ethanol to prepare a solution containing 8 mg per ml as internal standard solution. Weigh accurately 10 mg of each of (±)-borneol CRS and (±)-isoborneol CRS in a stopper conical flask, add accurately 2 ml of the internal standard solution and 25 ml of dehydrated ethanol, mix well. Inject accurately 2 μl of the solution into the column; calculate the correction factor according to the average value of peak areas.

Procedure Weigh accurately 0.5 g of the powder in a conical flask with stopper, add accurately 2 ml of the internal standard solution and 25 ml of dehydrated ethanol, weigh. Ultrasonicate for 20 minutes, allow to stand to room temperature, weigh again and replenish the lost weight with dehydrated ethanol, mix well. Filter and use the successive filtrate as the test solution. Inject accurately 2 μl of the solution into the column, and calculate the content.
It contains not less than 30 mg of the total amount of (±)-borneol and (±)-isoborneol per gram, referred to Borneolum Syntheticum.

Action To clear *heat-toxicity*, reduce swelling and kill pain.

Indications Swollen painful throat or swollen painful gums, or sores on the mouth and tongue due to accumulation of *heat*.

Usage and dosage A small quantity is insufflated to the lesion, several times a day.

Storage Preserve in tightly closed containers.

Biwen San
(避瘟散)

Biwen Powder

Ingredients Lignum Santali Albi 156 g; Herba Lysimachiae Foenum-graeci 18 g; Radix Angelicae Dahuricae 42 g; Herba Eragrostis 180 g; Rhizoma Curcumae Longae 18 g; Flos Rosae Rugosae 42 g; Radix seu Rhizoma Nardostachyos 18 g; Flos Caryophylli 42 g; Radix Aucklandiae 36 g; Moschus 1.4 g; Borneolum Syntheticum 138 g; Cinnabaris 662 g; Mentholum 138 g.

Procedure Levigate Cinnabaris to very fine powder. Pulverize other ingredients, except Moschus, Borneolum Syntheticum and Mentholum, to fine powders, sift and mix well. Grind Borneolum Syntheticum and Mentholum to liquified, add 276 g of glycerine and mix well. Grind Moschus to powder, mix it well with the above powders, sift and finally mix well with the above liquid.

Description A vermilion powder; odour, aromatic; taste, cool.

Identification Shake 0.5 g of the powder in 10 ml of petroleum ether (30-60℃) for several minutes and filter. Concentrate the filtrate to about 2 ml at a low temperature as the test solution. Dissolve menthol CRS and a mixture of (±)-borneol and (±)-isoborneol CRS in petroleum ether (30-60℃) to prepare a mixture containing 0.5 g of each per ml as the reference solution. Carry out the method for thin layer chromatography (Appendix Ⅵ B), using silica gel G as the coating substance and a mixture of cyclohexane and ethyl acetate (17:3) as the mobile phase. Apply separately to the plate 10 μl of each of the above two solutions. After developing and removal of the plate, dry in air. Spray with 5% vanillin in sulfuric acid, heat to the spots clear. The spots in the chromatogram obtained with the test solution correspond in position and colour to the spots in the chromatogram obtained with the reference solution.

Other requirements Comply with the general requirements for powders (Appendix Ⅰ B).

Action To expel *summer-heat* and pathological factors, and induce resuscitation and kill pain.

Indications Dizziness, headache, stuffy nose, nausea, vomiting due to affliction from *summer-heat*; motion sickness.

Usage and dosage 0.6 g; appropriate quantity to be inhaled into the nostrils.

Strength 0.84 g per box

Storage Preserve in tightly closed containers, stored in a cool and dry place.

Biyan Pian
(鼻炎片)

Biyan Tablets

Ingredients Fructus Xanthii; Flos Magnoliae; Radix Saposhnikoviae; Fructus Forsythiae; Flos Chrysanthemi Indici; Schisandrae Chinensis; Radix Platycodi; Radix Angelicae Dahuricae; Rhizoma Anemarrhenae; Herba Schizonepetae; Radix et Rhizoma Glycyrrhizae; Cortex Phellodendri Chinensis; Herba Ephedrae; Herba Asari.

Procedure Pulverize Radix Angelicae Dahuricae, Radix Platycodi and a part of Cortex Phellodendri Chinensis to fine powder. Isolate volatile oil from Flos Magnoliae, Flos Chrysanthemi Indici, Herba Asari and Herba Schizonepetae by distillation, collect the aqueous solution in another container. Pulverize Herba Ephedrae, Rhizoma Anemarrhenae and Schisandrae Chinensis to coarse powder, carry out the method for percolation as described under liquid extracts and extracts (Appendix Ⅰ O), using 60% ethanol as the solvent and collect the percolate, recover ethanol. Decoct the other ingredients and the remained Cortex Phellodendri Chinensis with water twice, 1 hour for each, combine the decoctions with the above aqueous solution and percolate, concentrate to form an extract with a relative density of 1.25, spray drying to fine powder, add the above fine powder of Radix Angelicae Dahuricae and other two ingredients, mix well, make granules and dry, spray the above volatile oil to granules, compress into tablets, coat with sugar or film.

Description Sugar-coated or film-coated tablets with brown core; odour, aromatic; taste, bitter.

Identification (1) Microscopical: Compound starch granules consisting of 8-12 components. Anastomosing laticiferous tubes 14-25 μm in diameter, containing pale yellow granules.
(2) Pulverize 20 sugar-coated tablets or 12 film-coated tablets, removed from the coats, to fine powder, add 60 ml of ether, ultrasonicate for 20 minutes, and filter. Expel ether of the filtrate, dissolve the residue in 1 ml of ethyl acetate as the test solution. Prepare a solution with 0.5 g of Radix Angelicae Dahuricae reference drug and 20 ml of ether in the same manner as the reference drug solution. Carry out the method for thin layer chromatography (Appendix Ⅵ B), using silica gel G as the coating substance and a mixture of petroleum ether (60-90℃) and ether (3:2) as the mobile

phase. Apply separately to the plate 5 μl of each of the above two solutions. After developing and removal of the plate, dry in air, and examine under ultraviolet light at 365 nm. The main fluorescent spots in the chromatogram obtained with the test solution correspond in position and colour to the spots in the chromatogram obtained with the reference drug solution.

(3) Pulverize 20 sugar-coated tablets or 12 film-coated tablets, removed from the coats, to fine powder. Add 60 ml of ether, heat under reflux for 1 hour and filter. Transfer the filtrate to a separator, wash with three 15-ml quantities of 5% sodium carbonate solution, discard the washings. Extract with three 20-ml quantities of 1% sodium hydroxide solution, acidify the combined extracts with dilute hydrochloric acid TS and extract with three 20-ml quantities of ether. Evaporate the combined ether solution to dryness, dissolve the residue in 1 ml of ethanol as the test solution. Prepare a solution with 1 g of Fructus Forsythiae reference drug as the reference drug solution in the same manner. Carry out the method for thin layer chromatography (Appendix Ⅵ B), using silica gel G mixed with 2% sodium hydroxide solution as the coating substance and a mixture of chloroform, ethyl acetate and methanol (10∶5∶1) as the mobile phase. Apply separately 10 μl of the test solution and 2 μl of the reference drug solution to the plate. After developing and removal of the plate, dry in air. Spray with 10% sulfuric acid in ethanol, heat at 105℃ to the spots clear. The spots in the chromatogram obtained with the test solution correspond in position and colour to the spots in the chromatogram obtained with the reference drug solution.

(4) Pulverize 10 sugar-coated tablets or 6 film-coated tablets, removed from the coats, to fine powder. Add 30 ml of ethyl acetate, ultrasonicate for 30 minutes, and filter. Evaporate the filtrate to dryness. Dissolve the residue in a quantity of methanol. Apply to a neutral alumina column (100-200 mesh, 1 cm in internal diameter, packed with 3 g of neutral alumina by methanol, washed previously with methanol) and elute with 20 ml of methanol. Collect the eluate, evaporate to dryness. Dissolve the residue in 1 ml of methanol as the test solution. Dissolve magnolin CRS in methanol to produce a solution containing 1 mg per ml as the reference solution. Carry out the method for the thin layer chromatography (Appendix Ⅵ B), using silica gel H as the coating substance and the mixture of chloroform and ether (5∶1) as the mobile phase. Apply seperately 10 μl of the test solution and 5 μl of the reference solution to the plate. After developing and removal of the plate, dry in air. Spray with 10% sulfuric acid in ethanol, heat at 90℃ to the spots distinct. The purplish-red spot in the chromatogram obtained with the test solution corresponds in position and colour to the spot in the chromatogram obtained with the reference solution.

Other requirements Comply with the general requirements for tablets (Appendix Ⅰ D).

Assay Carry out the method for high performance liquid chromatography (Appendix Ⅵ D).

Chromatographic system and system suitability Use octadecylsilane bonded silica gel as the stationary phase, a mixture of acetonitrile and water (38∶62) as the mobile phase. As detector a spectrophotometer set at 278 nm. The number of theoretical plates of the column is not less than 7000, calculated with the reference to the peak of magnolin.

Reference solution Dissolve a quantity of magnolin CRS, accurately weighed, in methanol to prepare a solution containing 6 μg per ml as the reference solution.

Test solution Weigh accurately 10 tablets, removed the coating, pulverize to fine powder. Place 1 g, weighed accurately, in a stopper conical flask, add exactly 25 ml of methanol, stopper closely and weigh. Ultrasonicate (power 150 W, frequency 25 kHz) for 30 minutes, allow it to cool, weigh again and replenish the lost weight with methanol, mix well and filter. Measure accurately 5 ml of the successive filtrate and apply to a neutral alumina column (100-200 mesh, 1 cm in internal diameter, packed with 2 g of neutral alumina by methanol, washed previously with methanol) and elute with a quantity of methanol, collect eluate into a 10 ml volumetric flask until almost to the volume, dilute with methanol to volume and mix well. Filter and use the successive filtrate as the test solution.

Procedure Inject accurately 20 μl of each of the reference solution and the test solution into the column, and calculate the content.

It contents not less than 60 μg (sugar coated tablet) or 0.10 mg (film coated tablet) of magnolin ($C_{23}H_{28}O_7$) per tablet, referred to Flos Magnoliae.

Action To expel *wind* and disperse *lung-qi*, and clear *heat—toxicity*.

Indications Acute or chronic rhinitis due to accumulation of *heat* in the lung with manifestations of stuffy and running nose, fever and headache.

Usage and dosage 3-4 tablets (sugar-coated tablets) or 2 tablets (film-coated tablets), 3 times a day.

Strength 0.5 g per tablet (film-coated tablets)

Storage Preserve in tightly closed containers.

Biyuanshu Koufuye (鼻渊舒口服液)

Biyuanshu Mixture

Ingredients Fructus Xanthii; Flos Magnoliae; Herba Menthae; Radix Angelicae Dahuricae; Radix Scutellariae; Fructus Gardeniae; Radix Bupleuri; Radix et Rhizoma Asari; Rhizoma Chuanxiong; Radix Astragali; Caulis Clematidis Armandii; Radix Platycodonis; Poria.

Procedure Distill the above ingredients, except Radix Scutellariae, with a quantity of water, collect a quantity of the distillate; redistill, collect a quantity of the redistillate, store at low temperature for the latter use. Extract dynamically the residue with hot water for 0.5 hour, centrifuge and filter, concentrate the filtrate to a quantity, cool. Add ethanol to a concent of 79% ethanol, stir well, stand for over 20 hours. Recover ethanol from the supernatant, concentrate to a quantity, refrigerate for the latter use. Extract dynamically Radix Scutellariae with water for 2 hours, centrifuge and filter, concentrate the filtrate to a quantity and precipitate with a quantity of acid. To the precipitate, add the above two solutions refrigerated, stir well, add 9 ml of polysorbate 80 and a quantity of simple syrup (or sodium cyclamate), add water to a volume of 1000 ml. Adjust to pH 7.0-8.0 with sodium hydroxide solution, stir well, refrigerate, filter.

Description A brownish-yellow to brown liquid; odour, specifically aromatic; taste sweet and slightly bitter.

Identification (1) To 20 ml of the mixture, add 30 ml of ethanol, shake thoroughly, allow to stand for 30 minutes, filter, evaporate the filtrate to dryness. Dissolve the residue in 20 ml of water, extract by shaking with two 20-ml quantities of *n*-butanol saturated with water. Combine the *n*-butanol extracts, evaporate to dryness. Dissolve the residue in 5 ml of ethanol, filter, evaporate the filtrate to dryness. Dissolve the residue in 1 ml of methanol as the test solution.

Dissolve geniposide CRS in methanol to prepare a solution containing 1 mg per ml as the reference solution. Carry out the method for thin layer chromatography (Appendix Ⅵ B), using silica gel G as the coating substance and the lower layer of a mixture of chloroform, methanol and water (13∶7∶2), stood below 10℃ overnight, as the mobile phase. Apply separately 5 μl of each of the test solution and the reference solution to the plate. After developing and removal of the plate, dry in air, spray with 10% sulfuric acid in ethanol, heat at 105℃ to the spots distinct. The spot in the chromatogram obtained with the test solution corresponds in position and colour to the spot in chromatogram obtained with the reference solution.

(2) Extract by shaking 50 ml of the mixture with two 30-ml quantities of chloroform, combine the chloroform extracts, evaporate to dryness, dissolve the residue in 1 ml of methanol as the test solution. Macerate 0.5 g of Rhizoma Chuanxiong reference drug with 20 ml of chloroform for 30 minutes, shake constantly, filter, use the filtrate to prepare a solution as the reference drug solution. Carry out the method for thin layer chromatography (Appendix Ⅵ B), using silica gel G as the coating substance and a mixture of petroleum ether (60-90℃) and ethyl acetate (9∶1) as the mobile phase. Apply separately 10 μl of each of the test solution and the reference drug solution to the plate. After developing and removal of the plate, dry in air. Examine under ultraviolet light at 365 nm, the fluorescent spots in the chromatogram obtained with the test solution correspond in position and colour to the fluorescent spots in chromatogram obtained with the reference drug solution.

(3) Extract by shaking 5 ml of the mixture with two 10-ml quantities of ether, discard the ether extracts, adjust the aqueous solution to pH 2-3 with hydrochloric acid. Extract the aqueous solution with two 10-ml quantities of ethyl acetate by shaking, combine the ethyl acetate extracts, evaporate to dryness, dissolve the residue in 1 ml of methanol as the test solution. Dissolve baicalin CRS in methanol to prepare a solution containing 1 mg per ml as the reference solution. Carry out the method for thin layer chromatography (Appendix Ⅵ B), using silica gel G mixed with 4% solution of sodium acetate as the coating substance and a mixture of ethyl acetate, butanone, formic acid and water (5∶3∶1∶1) as the mobile phase. Apply separately 1-2 μl of each of the test solution and the reference drug solution to the plate. After developing and removal of the plate, dry in air, spray with 2% acidic ferric chloride in ethanol. The spot in the chromatogram obtained with the test solution corresponds in position and colour to the spotin chromatogram obtained with the reference solution.

(4) Apply 30 ml of the mixture to a column packed with macroporous resin D 101 (1.5 cm in internal diameter, 12 cm long), elute with 100 ml of 1% sodium hydroxide, discard the eluates; elute with water to neutral, discard the aqueous solution; elute with 30 ml of 30% ethanol, discard the eluates; elute with 60 ml of 70% ethanol, collect the eluates. Evaporate the eluates to about 1 ml on a water bath, add 2 g of neutral aluminium oxide (100-200 mesh), stir well, dry. Stir and wash with 30 ml of 40% methanol in portions, filter, evaporate the filtrate to dryness, dissolve the residue in 1 ml of methanol as the test solution. Dissolve astragaloside Ⅳ CRS in methanol to prepare a solution containing 1 mg per ml as the reference solution. Carry out the method for thin layer chromatog-raphy (Appendix Ⅵ B), using silica gel G as the coating substance and the lower layer of a mixture of chloroform, methanol and water (13∶7∶2), stood below 10℃ overnight, as the mobile phase. Apply separately 10 μl of the test solution and 5 μl of the reference solution to the plate. After developing and removal of the plate, dry in air, spray with 10% sulfuric acid in ethanol, heat at 105℃ to the spots distinct. Examine in daylight, the spot in the chromatogram obtained with the test solution corresponds in position and colour to the spot in chromatogram obtained with the reference solution. Examine under ultraviolet light at 365 nm, the fluorescent spot with the test solution corresponds in position and colour to the spot in chromatogram obtained with the reference solution.

Relative density Not less than 1.08 or not less than 1.04 (without sucrose) (Appendix Ⅶ A).

pH value 5.0-7.5 (Appendix Ⅶ G).

Other requirements Complies with the general requirements for mixtures (Appendix Ⅰ J)

Assay Carry out the method for high performance liquid chromatography (Appendix Ⅵ D)

Chromatographic system and system suitability Use octadecylsilane bonded silica gel as the stationary phase and a mixture of methanol and 0.2% solution of phosphoric acid (30∶70) as the mobile phase. As detector a spectrophotometer set at 238 nm. The number of theoretical plates of the column is not less than 3500, calculate with the reference to the peak of geniposide.

Reference solution Dissolve a quantity of geniposide CRS, accurately weighed, in methanol to prepare a solution containing 30 μg per ml as the reference solution.

Test solution Measure accurately 1 ml of the mixture to a 100 ml volumetric flask, dilute with 50% methanol to volume and shake thoroughly, filter, use the successive filtrate as the test solution.

Procedure Inject accurately 10 μl of each of the reference solution and the test solution, respectively, into the column, and calculate the content. It contains not less than 2.0 mg of geniposide ($C_{17}H_{24}O_{10}$) per ml, referred to Fructus Gardeniae.

Action To disperse *wind* and clear *heat*, eliminate *dampness* and free the orifices.

Indications Rhinitis and nasosinusitis due to *wind-heat* in the Lung Meridian and *heat* retention in the gallbladder.

Usage and dosage 10 ml, 2-3 times a day. 7 days for one course of treatment.

Strengh 10 ml per vial

Storage Preserve in tightly closed containers.

Boyun Tuiyi Wan (拨云退翳丸)

Boyun Tuiyi Pills

Ingredients Flos Buddlejae 80 g; Fructus Tribuli (stir-baked with salt) 60 g; Flos Chrysanthemi 20 g; Herba Equiseti Hiemalis 80 g; Periostracum Serpentis 12 g; Periostracum Cicadae 20 g; Spica Schizonepetae 40 g; Fructus Viticis 80 g; Herba Menthae 20 g; Radix Angelicae Sinensis 60 g; Rhizoma Chuanxiong 60 g; Rhizoma Coptidis 20 g; Cortex Lycii 40 g; Pericarpium Zanthoxyli 28 g; Fructus Broussonetiae 20 g; Radix Trichosanthis 24 g; Radix et Rhizoma Glycyrrhizae 12 g.

Procedure Pulverize the above seventeen ingredients to fine powder, sift and mix well. To each 100 g of the powder add 140-160 g of refined honey to make big honeyed pills.

Description Blackish-brown to black big honeyed pills; odour, aromatic; taste, bitter.

Identification Microscopical: Pollen grains subrounded,

24-30 μm in diameter, extine spiny, 3-5 μm long, with 3 germinal apertures. Non-glandular hairs of epidermis of persistent calyx 2-3 celled, the base of terminal cells slightly thickened, walls with warty cuticle. Non glandular hairs 4-celled, with two cells uniseriated at the base and two cells biserrated at the apex, each cell 2-forked, forks 250-500 μm long, walls extremely thickened, lumen linear. Stone cells of pericarp pale yellowish-brown, or pale yellow, abundent, with indistinct boundary, anticlinal walls slightly thickened and deeply sinuous with sparse pits. Pericarp fibres lignified with the upper and lower layer crisscross arranged. Crystal thick-walled cells brownish-yellow, subpolygonal in surface view containing clusters of calcium oxalate. Fibre bundles surrounded by parenchymatous cells containing prisms of calcium oxalate, forming crystal fibres. Fibre bundles bright yellow, walls slightly thickened, with distinct pits. Epidermal cells rectangular, walls thickened and densely sinuous, containing sandy crystals of silicates; stomata characteristic, walls of the guard cells radiately thickened. Bordered pitted vessels large, mostly broken, some bordered pits hexagonal or rhombic, arranged closely. Fragments of chitin shell yellowish-brown, translucent, densely covered with papillary or short spiny protrudings.

Other requirements Comply with the general requirements for pills (Appendix I A).

Action To disperse *wind* and clear *heat*, and remove nebula to improve eyesight.

Indications Nebula, blurred vision, dull pain of eyes and tears running due to upward disturbance by *wind-heat*.

Usage and dosage 1 pill, twice a day.

Precaution Avoid pungent and spicy food.

Strength 9 g per pill

Storage Preserve in tightly closed containers.

Bushen Guchi Wan
(补肾固齿丸)

Bushen Guchi Pills

Ingredients Radix Rehmanniae Praeparata; Radix Rehmanniae; Caulis Spatholobi; Placenta Hominis; Rhizoma Drynariae (stir-baked with salt water); Radix Rhapontici; Radix et Rhizoma Salviae Miltiorrhizae (stir-baked with wine); Fructus Schisandrae Chinensis (stir-baked with wine); Rhizoma Dioscoreae; Radix Curcumae (stir-baked with vinegar); Radix Astragali praeparata Cum Melle; Radix Achyranthis Bidentatae; Flos Chrysanthemi Indici; Poria; Fructus Lycii; Cortex Moutan; Rhizoma Alismatis (stir-baked with salt water); Cortex Cinnamomi.

Procedure Pulverize the above eighteen ingredients to fine powder, sift and mix well. Dissolve 30 g of salt in a quantity of water and filter. To the powder add salt water, make pills and dry, coat with film.

Description Film-coated watered pills with brown core; taste, salty, slightly bitter and pungent.

Identification (1) Microscopical: Parenchyma greyish-brown to blackish-brown, cells mostly shrunken, and each containing a brown nucleus-like mass. Stone cells of epidermis of testa pale yellowish-brown, subpolygonal in surface view, walls relatively thickened, with fine and dense pit-canals, containing dark brown contents. Fibres in bundles or scattered, walls thickened, with longitudinal fissures in surface, both ends broken to broom-like or relatively truncate. Pollen grains subrounded, 24-34 μm in diameter, extine spiny, 3-5 μm long, with 3 germinal apertures. Stone cells of testa irregular subpolygonal in surface view, walls thickened and sinuous, striations well-defined.

(2) Pulverize 10 g of the pills, add 40 ml of dehydrated ethanol, heat under reflux for 30 minutes, centrifuge, evaporate the supernatant to dryness. Dissolve the residue in 20 ml of ether, wash the ether solution by shaking, with a quantity of 0.1% sodium hydroxide solution, and wash again with two 5-ml quantities of water, discard the washings, dehydrate the ether solution with a quantity of sodium sulfate anhydrous and evaporate to dryness naturally. Dissolve the residue in 1 ml of ethyl acetate as the test solution. Dissolve tanshinone II_A CRS in ethyl acetate to produce a solution containing 2 mg per ml as the reference solution. Carry out the method for thin layer chromatography (Appendix VI B), using silica gel G as the coating substance and a mixture of benzene and ethyl acetate (19:1) as the mobile phase. Apply separately 6-8 μl of the test solution and 4 μl of the reference solution to the plate. After developing and removal of the plate, dry in air. The spot in the chromatogram obtained with the test solution corresponds in position and colour to the spot in the chromatogram obtained with the reference solution.

Other requirements Comply with the general requirements for pills (Appendix I A).

Action To nourish the kidney to strengthen teeth, promote blood circulation and relieve *toxicity*.

Indications Aching and weakness of teeth, masticatory atonia, odontoseisis, swollen and bleeding gums; chronic peridontitis with above symptoms.

Usage and dosage 4 g, twice a day.

Strength 1 g per 30 pills

Storage Preserve in well closed containers.

Bushen Yinao Pian
(补肾益脑片)

Bushen Yinao Tablets

Ingredients Cornu Cervi Pantotrichum (removed from hairs) 6 g; Radix et Rhizoma Ginseng Rubra 39 g; Poria 38 g; Rhizoma Dioscoreae (stir-baked) 38 g; Radix Rehmanniae Praeparata 81 g; Radix Angelicae Sinensis 38 g; Rhizoma Chuanxiong 29 g; Fructus Psoraleae (stir-baked with salt) 29 g; Radix Achyranthis Bidentatae 29 g; Fructus Lycii 30 g; Radix Scrophulariae 29 g; Radix Ophiopogonis 38 g; Fructus Schisandrae Chinensis 29 g; Semen Ziziphi Spinosae (stir-baked) 38 g; Radix Polygalae (stir-baked with honey) 38 g; Cinnabaris 10 g.

Procedure Levigate Cinnabaris to very fine powder, pulverize Cornu Cervi Pantotrichum, Radix et Rhizoma Ginseng Rubra, Poria, Rhizoma Dioscoreae, Rhizoma Chuanxiong, Fructus Psoraleae, Fructus Lycii and Radix Rehmanniae Preparata to fine powder, sift and mix well, then triturate with the Cinnabaris powder and mix well. Decoct the other seven ingredients with water three times, 3 hours for the first time and 2 hours for the second and third time respectively. Combine the decoctions, filter, concentrate the filtrate to a quantity, mix well with the above powder, dry, pulverize and sift. Add a quantity of excipients, mix well, make granules and compress into 1000 tablets, coat with sugar.

Description Sugar coated tablets with brown core; taste, sweet, slightly sour.

Identification (1) Microscopical: Clusters of calcium oxalate 20-68 μm in diameter, angle acute. Irregular branched masses colourless, dissolved in chloral hydrate TS; hyphae colourless or pale brown, 4-6 μm in diameter. Parenchyma greyish-brown to blackish-brown, cells mostly shrunken, each containing a brown nucleus-like mass. Palisade cells of testa pale brown or reddish-brown, subpolygonal in surface view, walls slightly thickened, containing reddish-brown masses. Stone cells of testa irregular in surface view, polygonal, walls thickened and sinuous, striations well-marked. Starch granules triangular-ovate or long subrounded, 24-40 μm in diameter, hilum short cleft or V-shaped.

(2) Pulverize 10 tablets, removed from the sugar coats, add 20 ml of ethyl acetate, ultrasonicate for 15 minutes, filter, keep the residue for latter use, evaporate the filtrate to dryness. Dissolve the residue in 2 ml of ethyl acetate as the test solution. Dissolve psoralen CRS and isopsoralen CRS in ethyl acetate to produce a mixture containing 2 mg of each per ml as the reference solution. Carry out the thin layer chromatography (Appendix Ⅵ B), using silica gel G as the coating substance and a mixture of n-hexane and ethyl acetate (4∶1) as the mobile phase. Apply separately 2-4 μl of the above two solutions to the plate. After developing and removal of the plate, dry in air, spray with 10% potassium hydroxide in methanol. Examine under ultraviolet light at 365 nm. The fluorescent spots in the chromatogram obtained with the test solution correspond in position and colour to the spots in the chromatogram obtained with the reference solution.

(3) Take the drug residue, obtained under Identification test (2), expel ethyl acetate, add 20 ml of 70% ethanol, ultrasonicate for 30 minutes, filter, evaporate the filtrate to almost dryness, dilute with 20 ml of water. Transfer the water solution to a separator, extract with two 10-ml quantities of *n*-butanol saturated with water. Combine the *n*-butanol extracts, wash with two 10-ml quantities of ammonia TS, separate the *n*-butanol solution and evaporate to dryness. Dissolve the residue in 2 ml of methanol as the test solution. To 0.5 g of Radix et Rhizoma Ginseng reference drug, add 10 ml of ether, ultrasonicate for 10 minutes, filter, expel ether of the drug residue, then prepare the reference drug solution in the same manner. Dissolve ginsenoside Rb_1 CRS, ginsenoside Re CRS, and ginsenoside Rg_1 CRS in methanol to produce a mixture containing 2 mg of each per ml as the reference solution. Carry out the method for thin layer chromatography (Appendix Ⅵ B), using silica gel G as the coating substance and the lower layer of a mixture of chloroform, methanol and water (13∶7∶2, standing under 10℃) as the mobile phase. Apply separately 6 μl of the test solution, 4 μl of the reference drug solution and 2 μl of the reference solution to the plate. After developing and removal of the plate, dry in air. Spray with 10% sulfuric acid in ethanol, heat at 105℃ to the spots clear. Examine under daylight, the spots in the chromatogram obtained with the test solution correspond in position and colour to the spots in the chromatogram obtained with the reference drug solution and the reference solution. Examine under ultraviolet light at 365 nm, the fluorescent spots in the chromatogram obtained with the test solution correspond in position and colour to the spots in the chromatogram obtained with the reference drug solution and the reference solution.

(4) Grind well 10 tablets, removed from the sugar coats, add 10 ml of ether, ultrasonicate for 20 minutes, filter, and evaporate the filtrate to dryness. Dissolve the residue in 1 ml of ethyl acetate as the test solution. Prepare a solution with 1 g of Rhizoma Chuanxiong reference drug in the same manner as the reference drug solution. Carry out the method for thin layer chromatography (Appendix Ⅵ B), using silica gel G as the coating substance and a mixture of n-hexane and ethyl acetate (9∶1) as the mobile phase. Apply separately 5 μl of the above two solutions to the plate. After developing and removal of the plate, dry in air, and examine under ultraviolet light at 365 nm. The fluorescent spots in the chromatogram obtained with the test solution correspond in position and colour to the spots in the chromatogram obtained with the reference drug solution.

Other requirements Comply with the general requirements for tablets (Appendix Ⅰ D).

Assay Carry out the method for high performance liquid chromatography (Appendix Ⅵ D).

Chromatographic system and system suitability Use octadecylsilane bonded silica gel as the stationary phase and a mixture of methanol and water (45∶55) as the mobile phase. As detector a spectrophotometer set at 245 nm. The number of theoretical plates of the column is not less than 3000, calculated with the reference to the peak of psoralen.

Reference solution Dissolve respectively a quantity of psoralen CRS and isopsoralen CRS, accurately weighed, in methanol to produce a mixture containing 25 μg of each per ml as the reference solution.

Test solution Weigh accurately 20 tablets, with coating removed, grind well. Weigh accurately 3 g in a stopper conical flask, add accurately 50 ml of methanol, stopper well, and weigh. Ultrasonicate (power 280 W, frequency 40 kHz) for 30 minutes, cool, weigh again, replenish the loss of weight with methanol, shake well and filter. Use the successive filtrate as the test solution.

Procedure Inject accurately 10 μl of each of the reference solution and the test solution into the column, repectively, calculate the content.

It contains not less than 0.23 mg of the total amount of psoralen ($C_{11}H_6O_3$) and isopsoralen ($C_{11}H_6O_3$) per tablet, referred to Fructus Psoraleae.

Action To nourish the kidney to generate essence, and replenish *qi* to nourish blood.

Indications Palpitation, shortness of breath, insomnia, amnesia, seminal emission, night sweat, weakness and aching in the lower back and legs, tinnitus, poor hearing or deafness due to a deficiency of kidney-essence, *qi* and blood as well.

Usage and dosage 4-6 tablets, twice a day.

Precaution Contraindicated for patients with common cold and fever.

Storage Preserve in tightly closed containers.

Buzhong Yiqi Wan
(补中益气丸)

Buzhong Yiqi Pills

Ingredients Radix Astragali Praeparata Cum Melle 200 g; Radix Codonopsis 60 g; Radix et Rhizoma Glycyrrhizae Praeparata Cum Melle 100 g; Rhizoma Atractylodis Macrocephalae (stir-baked) 60 g; Radix Angelicae Sinensis 60 g; Rhizoma Cimicifugae 60 g; Radix Bupleuri 60 g; Pericarpium Citri Reticulatae 60 g.

Procedure Pulverize the above eight ingredients to fine powder, sift and mix well. Decoct 20 g of Rhizoma

Zingiberis Recens and 40 g of Fructus Jujubae with water for two times and filter. Concentrate the filtrate, to each 100 g of the powder add 100-120 g of refined honey and concentrated decoction, make small honeyed pills, or to each 100 g of the powder add 100-120 g of refined honey, make big honeyed pills.

Description Brown to blackish-brown small or big honeyed pills; taste, slightly sweet, slightly bitter and pungent.

Identification (1) Microscopical: Fibres in bundles or scattered, walls thickened, with longitudinal fissures on the surface, both ends broken to broom-like or slightly truncate. Fibre bundles surrounded by parenchymatous cells containing prisms of calcium oxalate, forming crystal fibres. Needles of calcium oxalate minute, 10-32 μm long, irregularly filled in parenchymatous cells. Prisms of calcium oxalate abundant in parenchyma. Anastomosing laticiferous tubes 12-15 μm in diameter, containing fine granules. Parenchymatous cells fusiform, walls slightly thickened, with very minute oblique crisscross striations. Wood fibres in bundles, pale yellowish-green, with narrowly acute or obtuse-rounded ends, some branched, 14-41 μm in diameter, walls slightly thickened, with cross-shaped pit-pairs, sometimes containing yellowish-brown contents. Vittae containing pale yellow or yellowish-brown stripped secretion, 8-25 μm in diameter.

(2) Triturate 9 g of the small honeyed pills or the big honeyed pills, mix well with 5 g of kieselguhr, add 20 ml of *n*-hexane, ultrasonicate for 15 minutes, and filter. Evaporate the filtrate to dryness at a low temperature. Dissolve the residue in 1 ml of *n*-hexane as the test solution. Prepare a solution with 0.2 g of Rhizoma Atractylodis Macrocephalae reference drug and 5 ml of *n*-hexane as the reference drug solution in the same manner. Carry out the method for thin layer chromatography (Appendix Ⅵ B), using silica gel G as the coating substance and a mixture of petroleum ether (60-90℃) and ethyl acetate (20∶0.1) as the mobile phase. Apply separately 10 μl of each of the above two solutions to the plate. After developing and removal of the plate, dry in air. Spray with 5% vanillin in sulfuric acid and heat to the spots clear. The spots in the chromatogram obtained with the test solution correspond in position and colour to the spots in the chromatogram obtained with the reference drug solution.

(3) Triturate 9 g of the small honeyed pills or the big honeyed pills into pieces, add 30 ml of water, decoct for 30 minutes and filter. To the filtrate add 5 ml of dilute hydrochloric acid, ultrasonicate for 5 minutes, allow to stand and centrifuge. Separate the precipitate and dissolve in 1 ml of dilute ethanol, neutralize with 10% sodium bicarbonate solution and heat for a while as the test solution. Dissolve ammonium glycyrrhizinate CRS in dilute ethanol to produce a solution containing 1 mg per ml as the reference solution. Carry out the method for thin layer chromatography (Appendix Ⅵ B), using silica gel GF_{254} as the coating substance and a mixture of *n*-butanol, glacial acetic acid and water (6∶1∶3) as the mobile phase. Apply separately 5 μl of each of the above two solutions to the plate. After developing and removal of the plate, dry in air and examine under ultraviolet light at 254 nm. The fluorescent spot in the chromatogram obtained with the test solution corresponds in position and colour to the spot in the chromatogram obtained with the reference solution.

Other requirements Comply with the general requirements for pills (Appendix Ⅰ A).

Action To reinforce the *middle-energizer* to replenish *qi* and elevate *yang* to prevent drooping.

Indications Diarrhea, prolapse of the rectum or uterus due to deficiency in the spleen and stomach and sinking of *spleen-qi*, with manifestations of lassitude, anorexia and abdominal distension, loose stools or chronic diarrhea, drooping of the anus or prolapse of the rectum or uterus.

Usage and dosage 9 g of small honeyed pills or 1 big honeyed pill, 2-3 times a day.

Strength 9 g per big honeyed pill

Storage Preserve in tightly closed containerc.

Buzhong Yiqi Wan (Shui Wan)
(补中益气丸，水丸)

Buzhong Yiqi watered Pills

Ingredients Radix Astragali Praeparata Cum Melle 200 g; Radix Codonopsis 60 g; Radix et Rhizoma Glycyrrhizae Praeparata Cum Melle 100 g; Rhizoma Atractylodis Macrocephalae (stir-baked) 60 g; Radix Angelicae Sinensis 60 g; Rhizoma Cimicifugae 60 g; Radix Bupleuri 60 g; Pericarpium Citri Reticulatae 60 g.

Procedure Pulverize the above eight ingredients to fine powder, sift and mix well. Decoct 20 g of Rhizoma Zingiberis Recens and 40 g of Fructus Jujubae with water for two times and filter. Make watered pills with the decoction and dry.

Description Brown watered pills; taste, slightly sweet, slightly bitter and pungent.

Identification (1) Microscopical: Fibres in bundles or scattered, walls thickened, with longitudinal fissures on the surface, both ends broken to broom-like or slightly truncate. Fibre bundles surrounded by parenchymatous cells containing prisms of calcium oxalate, forming crystal fibres. Needles of calcium oxalate minute, 10-32 μm long, irregularly filled in parenchymatous cells. Prisms of calcium oxalate abundant in parenchyma. Anastomosing laticiferous tubes 12-15 μm in diameter, containing fine granules. Parenchymatous cells fusiform, walls slightly thickened, with very minute oblique crisscross striations. Wood fibres in bundles, pale yellowish-green, with narrowly acute or obtuse-rounded ends, some branched, 14-41 μm in diameter, walls slightly thickened, with cross-shaped pit-pairs, sometimes containing yellowish-brown contents. Vittae containing pale yellow or yellowish-brown stripped secretion, 8-25 μm in diameter.

(2) Triturate well 5 g of the watered pills and add 10 ml of *n*-hexane, ultrasonicate for 15 minutes, and filter. Evaporate the filtrate to dryness at a low temperature. Dissolve the residue in 1 ml of *n*-hexane as the test solution. Prepare a solution with 0.2 g of Rhizoma Atractylodis Macrocephalae reference drug and 5 ml of *n*-hexane in the same manner as the reference drug solution. Carry out the method for thin layer chromatography (Appendix Ⅵ B), using silica gel G as the coating substance and a mixture of petroleum ether (60-90℃) and ethyl acetate (20∶0.1) as the mobile phase. Apply separately to the plate 10 μl of each of the above two solutions. After developing and removal of the plate, dry in air. Spray with 5% vanillin in sulfuric acid and heat to the spots clear. The spots in the chromatogram obtained with the test solution correspond in position and colour to the spots in the chromatogram obtained with the reference drug solution.

(3) Triturate well 5 g of the watered pills, add 20 ml of water, decoct for 30 minutes and filter. To the filtrate add 5 ml of dilute hydrochloric acid, ultrasonicate for 5 minutes, allow to stand and centrifuge. Separate the precipitate and dissolve in 1 ml of dilute ethanol, neutralize with 10%

sodium bicarbonate solution and heat for a while as the test solution. Dissolve ammonium glycyrrhizinate CRS in dilute ethanol to produce a solution containing 1 mg per ml as the reference solution. Carry out the method for thin layer chromatography (Appendix Ⅵ B), using silica gel GF_{254} as the coating substance and a mixture of *n*-butanol, glacial acetic acid and water (6∶1∶3) as the mobile phase. Apply separately 5 μl of each of the above two solutions to the plate. After developing and removal of the plate, dry in air and examine under ultraviolet light at (254 nm). The fluorescent spot in the chromatogram obtained with the test solution corresponds in position and colour to the spot in the chromatogram obtained with the reference solution.

(4) Triturate well 2 g of the watered pills, add 25 ml of ethyl acetate, ultrasonicate for 20 minutes, and filter, evaporate the filtrate to about 1 ml as the test solution. Prepare a solution with 0.3 g of Radix Angelicae Sinensis reference drug as the reference drug solution in the same manner. Carry out the method for the thin layer chromatography (Appendix Ⅵ B), using silica gel G as the coating substance and the mixture of cyclohexane and ethyl acetate (9∶2) as the mobile phase. Apply separately 2 μl of each of the above two solutions to the plate. After developing and removal of the plate, dry in air, and examine under ultraviolet light at 365 nm. The fluorescent spots in the chromatogram obtained with the test solution correspond in position and colour to the spots in the chromatogram obtained with the reference drug solution.

(5) Triturate well 2 g of the watered pills, and 25 ml of ethyl acetate, heat under reflux for 20 minutes, and filter. Evaporate the filtrate to dryness, and dissolve the residue in 2 ml of methanol as the test solution. Dissolve hesperidin CRS in methanol to produce a saturated solution as the reference solution. Carry out the method for thin layer chromatography (Appendix Ⅵ B), using silica gel G containing sodium carboxymethylcellulose as the coating substance and a mixture of ethyl acetate, methanol and water (100∶17∶13) as the mobile phase. Apply separately 1 μl of the test solution and 10 μl of the reference solution to the plate. After developing and removal of the plate, dry in air. Spray with aluminium trichloride TS, and examine under ultraviolet light at 365 nm. The fluorescent spot in the chromatogram obtained with the test solution corresponds in position and colour to the spot in the chromatogram obtained with the reference solution.

Other requirements Comply with the general requirements for pills (Appendix Ⅰ A).

Assay Carry out the method for high performance liquid chromatography (Appendix Ⅵ D).

Chromatographic system and system suitability Use octadecylsilane bonded silica gel as the stationary phase, a mixture of acetonitrile and water (35∶65) as the mobile phase. Use an evaporative light scattering detector. The number of theoretical plates of the column is not less than 4500, calculated with the reference to the peak of astragaloside Ⅳ.

Reference solution Dissolve 10 mg of astragaloside Ⅳ CRS, accurately weighed, in dilute methanol to prepare a solution containing 0.5 mg per ml as the reference solution.

Test solution Triturate a quantity of the pills to fine powder and mix well. To about 4 g of the powder, weighed accurately, in a Soxhlet's extractor, add a quantity of methanol, heat under reflux for 7 hours. Evaporate the extracts to dryness, and dissolve residue in 25 ml of water in warm, wash with two-20 ml quantities of ether, extract the water layer with six-20 ml quantities of *n*-butanol saturated with water. Combine the *n*-butanol extract, wash with three 40-ml quantities of ammonia TS. Evaporate the *n*-butanol extracts to dryness, and dissolve residue in methanol, and transfer to 10 ml volumetric flask, dilute with methanol to the volume. Mix well, filter and use the successive filtrate as the test solution.

Procedure Inject accurately 5 μl, 10 μl, 15 μl, 20 μl of the reference solution separately and 20 μl of the test solution into the column, calculate the content, using a calibration equation of logarithm alteration. It contents not less than 0.28 mg of astragaloside Ⅳ ($C_{41}H_{68}O_{14}$) per gram, referred to Radix Astragali Praeparata Cum Melle.

Action To reinforce the *middle-energizer* to replenish *qi* and elevate *yang* to prevent drooping.

Indications Diarrhea, prolapse of the rectum or uterus due to deficiency in the spleen and stomach and sinking of *spleen-qi*, with manifestations of lassitude, anorexia and abdominal distention, loose stools or chronic diarrhea, drooping of the anus or prolapse of the rectum or uterus.

Usage and dosage 6 g, 2-3 times a day.

Strength 9 g per big honeyed pill

Storage Preserve in well closed containers, protected from moisture.

Can'e gong Bu Pian
(蚕蛾公补片)

Can'egong Bu Tablets

Ingredients Bombyx Masculus (processed) 156.25 g; Radix et Rhizoma Ginseng 15.625 g; Radix Rehmanniae Praeparata 75 g; Rhizoma Atractylodis Macrocephalae (stir-baked) 75 g; Radix Angelicae Sinensis 56.25 g; Fructus Lycii 56.25 g; Fructus Psoraleae (processed with salt) 56.25 g; Semen Cuscutae (processed with salt) 37.5 g; Fructus Cnidii 37.5 g; Rhizoma Curculiginis 37.5 g; Herba Cistanches 37.5 g; Herba Epimedii 37.5 g.

Procedure Pulverize Radix et Rhizoma Ginseng and Rhizoma Atractylodis Macrocephalae to fine powder. Reflux the other ten ingredients with 50% ethanol for three times, filter and combine the filtrates, recover ethanol and concentrate to a thick extract. Add the above fine powder and a quantity of starch, mix well, make granules, make to 1000 tablets and coat with sugar.

Description Sugar coated tablets with brown core; odour, aromatic; taste, bitter.

Identification (1) Microscopical: Clusters of calcium oxalate 20-68 μm in diameter, with acute angles. Needles of calcium oxalate slender, 10-32 μm long, irregularly filling in the parenchyma cells.

(2) Grind 20 tablets, with coating removed, to fine powder, add 50 ml of methanol, heat under reflux for 1 hour, filter, and evaporate the filtrate to dryness. Dissolve the residue in 15 ml of water, extract by shaking with two 15-ml quantities of chloroform and discard the chloroform extracts. Extract the aqueous solution by shaking with three 15-ml quantities of *n*-butanol saturated with water, combine the *n*-butanol solutions, wash with three 20-ml quantities of ammonia TS, wash with 30 ml of water saturated with *n*-butanol, evaporate the *n*-butanol solution to dryness, and dissolve the residue in 1 ml of methanol as the test solution. Dissolve ginsenoside Rb1 CRS and ginsenoside Rg1 CRS in ethanol to produce a mixture containing 0.5 mg of each per ml as the reference solution. Carry out the method for thin layer chromatography (Appendix Ⅵ B), using silica gel G as the coating substance and the lower layer of a mixture of chloroform, methanol and water (13 : 7 : 2) as the mobile phase. Apply separately 10 μl of each of the two solutions to the plate. After developing and removal of the plate, dry in air and spray with 10% sulfuric acid in ethanol. Heat at 105℃ to the spots clear, and examine under ultraviolet light at 365 nm. The fluorescent spots in the chromatogram obtained with the test solution correspond in position and colour to the spots in the chromatogram obtained with the reference solution.

(3) Grind 20 tablets, with coating removed, to fine powder, add 50 ml of ethanol, ultrasonicate for 30 minutes, filter, and evaporate the filtrate to dryness. Dissolve the residue in 30 ml of water, extract by shaking with two 20-ml quantities of ether, combine the ether extracts, evaporate to dryness, and dissolve the residue in 1 ml of methanol as the test solution. Dissolve osthol CRS in methanol to produce a solution containing 2 mg per ml as the reference solution. Carry out the method for thin layer chromatography (Appendix Ⅵ B), using silica gel G as the coating substance and a mixture of cyclohexane and ethyl acetate (17 : 3) as the mobile phase. Apply separately 5 μl of each of the two solutions to the plate. After developing and removal of the plate, dry in air and examine under ultraviolet light at 365 nm. The fluorescent spot in the chromatogram obtained with the test solution corresponds in position and colour to the spot in the chromatogram obtained with the reference solution.

(4) Grind 20 tablets, with coating removed, to fine powder, add 50 ml of methanol, heat under reflux for 1 hour, filter and evaporate the filtrate to dryness. Dissolve the residue in 20 ml of water, Extract by shaking with three 15-ml quantities of ether, combine the ether extracts, evaporate to dryness, and dissolve the residue in 0.5 ml of methanol as the test solution. Dissolve ferulaic acid CRS in methanol to produce a solution containing 1 mg per ml as the reference solution. Carry out the method for thin layer chromatography (Appendix Ⅵ B), using silica gel G mixed with sodium carboxymethylcellulose as the coating substance and a mixture of petrol ether (60-90℃), chloroform and glacial acetic acid (12 : 4 : 1) as the mobile phase. Apply separately 15 μl of the test solution and 5 μl of the reference solution to the plate. After developing at a temperature below 10℃ and removal of the plate, dry in air and spray with a newly prepared mixture of 1% ferric chloride in ethanol and 1% solution of potassium ferricyanide (1 : 1). The spot in the chromatogram obtained with the test solution corresponds in position and colour to the spot in the chromatogram obtained with the reference solution.

Other requirements Comply with the general requirements for tablet (Appendix Ⅰ D).

Assay Carry out the method for high performance liquid chromatography (Appendix Ⅵ D).

Chromatographic system and system suitability Use octadecylsilane bonded silica gel as the stationary phase and a mixture of acetonitrile and water (25 : 75) as the mobile phase. As detector a spectrophotometer set at 245 nm. The number of theoretical plates of the column is not less than 3000, calculated with reference to the peaks of psoralen.

Reference solution Dissolve respectively a quantity of psoralen CRS and isopsoralen CRS, dried to constant weight at 105℃, accurately weighed, in 85% ethanol to prepare a mixture containing 20 μg of each per ml as the reference solution.

Test solution Weigh accurately 10 tablets, with coating removed, ground to fine powder, weigh accurately 1 g in a stopper conical flask, add accurately 25 ml of 85% ethanol, stopper tightly, and weigh. Ultrasonicate (power, 250 W; frequency, 33 kHz) for 30 minutes, cool, weigh again, replenish the loss of weight with 85% ethanol, shake well, centrifuge and use the supernatant as the test solution.

Procedure Inject accurately 10 μl of each of the reference solution and the test solution into the column, respectively, and calculate the content.

It contains not less than 80 μg of the total amount of psoralen ($C_{11}H_6O_3$) and isopsoralen ($C_{11}H_6O_3$) per tablet, referred to Fructus Psoraleae.

Action To reinforce the kidney to strengthen *yang*, nourish blood and replenish essence.

Indications Impotence, premature ejaculation, sterility due to *cold* in the uterus, hypogonadia caused by a deficiency of *kidney-yang*.

Usage and dosage 3-6 tablets, 3 times a day.

Storage Preserve in tightly closed containers.

Capsulae Cornu Saigae Tataricae (羚羊角胶囊，Lingyangjiao Jiaonang)

Antelope horn Capsules

Antelope horn capsules are prepared from Cornu Saigae Tataricae.

Procedure File 150 g of the horn to very fine powder, mix thoroughly, pack into 1000 capsules or 500 capsules.

Description Capsules, content white or white-like powder; odour, stinking; taste, slight.

Identification Heat under reflux 0.9 g of the powder in 20 ml of petroleum ether (60-90℃) for 1.5 hours, filter, discard the filtrate, expel the solvent of the drug residue. Heat under reflux the drug residue in 20 ml of 70% ethanol for 2.5 hours, filter, evaporate the filtrate to dryness, dissolve the residue in 1 ml of 70% ethanol as the test solution. Prepare a solution with Cornu Saigae Tataricae reference drug as the reference drug solution in the same manner. Carry out the method for thin layer chromatography (Appendix Ⅵ B), using silica gel G as the coating substances and a mixture of *n*-butanol, glacial acetic acid and water (3 ∶ 1 ∶ 1) as the mobile phase. Apply separately 10 μl each of the above two solutions to the plate. After developing and removal of the plate, dry in air. Spray with ninhydrine TS, heat to the spots clearly. The spots in the chromatogram obtained with the test solution correspond in position and colour to the spots in the chromatogram obtained with the reference drug solution.

Other requirements Comply with the general requirements for capsules (Appendix Ⅰ L).

Assay Weigh accurately 0.2 g of the content powder, obtained under the test of packing variation, carry out the method of determination of nitrogen (Appendix Ⅸ L, method 1) and determine.
It contains not less than 14.0 mg (strength (1)) or 28.0 mg (strength (2)) of nitrogen per capsule.

Action To pacify the liver to extinguish *wind*, clear the liver to improve eyesight, and dissipate *blood-heat* and reduce *toxicity*.

Indications High fever, proneness to fright, coma, convulsion, eclampsia, epilepsy, mania, headache, dizziness, bloodshot eyes, nebula and skin eruptions caused by *warm toxins* due to stirring of *liver-wind*, hyperactivity of *liver-fire* and abundant *blood-heat*.

Usage and dosage 0.3-0.6 g, once a day.

Strength (1) 0.15 g per capsule (2) 0.3 g per capsule

Storage Preserve in well closed containers.

Capsulae Extractum Dioscoreae Arthaicae seu Nipponicae (地奥心血康胶囊，Di'ao Xinxuekang Jiaonang)

Di'ao Xinxuekang Capsules

Di'ao Xinxuekang Capsules are prepared from Extractum Dioscorea Arthaica seu Nipponica.

Description Hard capsules containing pale yellow or pale brownish-yellow powder; taste slightly bitter.

Identification (1) Dissolve the content of 2 capsules with 10 ml of water in a stopper test tube, shake vigorously for 1 minute, the lasting foam is produced.
(2) Place a small amount of precipitate obtained under Assay in a dropping plate, add 3-4 drops of acetic anhydride to dissolve, add 1-2 drops of sulfuric acid; a purple red colour is produced, then gradually turn to a brown-red and then dirty green colour.

Loss on drying When dried a quantity of the content to constant weight at 105℃, loses not more than 11.0% (Appendix Ⅸ G).

Other requirements Comply with the general requirements for capsules (Appendix Ⅰ L).

Assay Weigh accurately a quantity of the content equivalent to 0.12 g of total steroid sapogenin, obtained in the test of packing variation, in a 150 ml round flask, add 50 ml of a solution of sulfuric acid in 40% ethanol (add 60 ml of sulfuric acid to a quantity of 40% ethanol, allow to cool, dilute to 1000 ml. with 40% ethanol, and shake well), heat under reflux on a boiling water bath for 5 hours, allow to cool, add 100 ml of water, filter through a No. 4 sintered glass filter, previously dried to constant weight at 105℃, wash the precipitate until the filtrate is neutral, dry to constant weight at 105℃, and calculate.
It contains not less than 35 mg of total steroid saponins per capsule, calculated as total steroid sapogenins.

Action To promote blood circulation to resolve stagnated blood, move *qi* to relieve pain, dilate coronary arteries and relieve myocardial ischemia.

Indications To prevent and treatment of coronary heart disease, angina pectoris and retention of stagnant blood leading to impeded flow of *yang-qi* in the chest, dizziness, shortness of breath, palpitation, and oppressive or painful feeling in the chest.

Usage and dosage 1-2 capsules, 3 times a day.

Strength 100 mg of total steroid saponins per capsule (correspond to 35 mg of total steroid sapogenin)

Storage Preserve in well closed containers.

Attached:

Extractum Dioscoreae Anthaicae Seu Nipponicae (地奥心血康)

Yellow Yam Extract

Yellow Yam Extract is prepared from Rhizome of *Dioscorea Anthaica* or *Dioscorea Nipponica* (Fam. Dioscoreaceae).

Description Pale yellow or pale brownish yellow powder; odourless, taste slightly bitter, hygroscopic.
Soluble in methanol or hot ethanol, sparingly soluble in water. Insoluble in ether.

Identification (1) Dissolve 5 mg with 10 ml of water in a stopper test tube, shake vigorously for 1 minute, the lasting foam is produced.
(2) Place a small amount of precipitate obtained in Assay on a dropping plate, add 3-4 drops of acetic anhydride to dissolve, add 1-2 drops of sulfuric acid, a purple red colour is produced, and gradually turns brownish red and then dirty green.
(3) Dissolve a quantity of the extract with methanol to produce a

solution containing 50 mg per ml as the test solution. Dissolve a quantity of yellow yam saponin reference extract with methanol to produce a solution containing 50 mg per ml as the reference extract solution. Carry out the method for thin layer chromatography (Appendix Ⅵ B), using silica gel H mixed with sodium carboxymethylcellulose as the coating substance and a mixture of chloroform, methanol and water (75 : 35 : 4) as the mobile phase. Apply separately 5 μl of each of the above two solutions to the plate, after developing and removal of the plate, dry in air, spray with 1% *p*-dimethylaminobenzaldehyde in a mixture of methanol and hydrochloric acid (dissolve 1 g of *p*-dimethylamin-obenzaldehyde in 75 ml of methanol, shake well, gently add 25 ml of hydrochloric acid and mix well), heat at 105℃ for 3-5 minutes. The spots in the chromatogram obtained with the test solution correspond in position and colour to the spots in the chromatogram obtained with the reference extract solution.

Loss on drying When dried to constant weight at 105℃, loses not more than 5.0 per cent (Appendix Ⅸ G).

Residue on ignition Not more than 0.3 per cent (Appendix Ⅸ J), using 1.0 g.

Iron Dissolve the residue obtained in the test of Residue on ignition with 4 ml of dilute hydrochloric acid, heat slightly, filter. Using the filtrate, carry out the limit test for iron (Appendix Ⅸ D). Any colour produced is not more intense than that of a reference solution using 2.5 ml of iron standard solution (25 ppm).

Heavy metals Carry out the limit test for heavy metals (Appendix Ⅸ E, method 2), using the residue obtained in the test of Residue on ignition: not more than 20 ppm.

Assay Weigh accurately 0.3g in a 150 ml round flask, add 50 ml of a solution of sulfuric acid in 40% ethanol (add slowly 60 ml of sulfuric acid to a quantity of 40% ethanol, allow to cool, dilute to 1000 ml. with 40% ethanol, and shake well), heat under reflux on a boiling water bath for 5 hours, allow to cool, add 100 ml of water, shake well, filter through a No. 4 sintered glass filter, previously dried to constant weight at 105℃, wash the precipitate with water until the washing is neutral, dry to constant weight at 105℃, and calculate.

It contains not less than 35.0 per cent of total steroid saponins on dried basis, calculated as total steroid sapogenin.

Storage Preserve in well closed containers.

Capsulae Gastrodiae (全天麻胶囊, Quantianma Jiaonang)

Tall gastrodia capsules

Tall gastrodia capsules are prepared from the fine powder of Rhizoma Gastrodiae.

Description Hard capsules with yellowish-white to yellowish-brown fine powder; odourless; taste, sweet.

Identification (1) Microscopical: needle crystals of calcium oxalate in bundles or scattered, 25-75 μm long; Fragments of tissue containing gelatinized polysaccharide showing a brown or pale brown-purple colour on adding a iodine TS.

(2) Heat under reflux 0.5 g of Rhizoma Gastrodiae reference drug with 15 ml of ethanol for 30 minutes, allow to stand, filter, concentrate the filtrate to 3 ml as the reference drug solution. Carry out the method for thin layer chromatography (Appendix Ⅵ B), using silica gel G as the coating substance and a mixture of ethyl acetate, methanol and water (9:1:0.2) as the mobile phase. Apply separately 5 μl of each of the test solution obtained under Assay and the above reference drug solution to the plate, after developing and removal of the plate, dry in air, spray with 10% phosphomolybdic acid in ethanol, heat at 105℃ to the spots clear. The spots in the chromatogram obtained with the test solution correspond in position and colour to the spots in the chromatogram obtained with the reference drug solution.

Water Not more than 12.0 per cent (Appendix Ⅸ H).

Starch granules Examining under microscope, no starch granules are inspected.

Other requirements Comply with the general requirements for granules (Appendix Ⅰ L).

Assay Carry out the method for high performance liquid chromatography (Appendix Ⅵ D).

Chromatographic system and system suitability Use octadecylsilane bonded silica gel as the stationary phase and a mixture of methanol, phosphate buffer (a mixture of 0.1 mol/L potassium dihydrogen phosphate solution and equal quantity of 0.1 mol/L disodium hydrogen phosphate solution) and water (10 : 3 : 87) as the mobile phase. As detector a spectrophotometer set at 270 nm. The number of theoretical plates of the column is not less than 1500, calculated with reference to the peak of gastrodin.

Reference solution Weigh accurately 25 mg of gastrodin CRS, dried at 80℃ for 1 hour, in a 50 ml volumetric flask, dissolve with methanol and dilute to the volume and mix well (containing 0.5 mg of gastrodin per ml).

Test solution Weigh accurately 0.5 g of the contents, obtained under the test of weight variation, in a 10 ml conical flask, add 5 ml of methanol, measured accurately, weigh, ultrasonicate for 30 minutes, allow to stand for 24 hours, and shake. Ultrasonicate for 2 hours again, replenish the lost weight with methanol, mix thoroughly, centrifuge, use the supernatant liquid as the test solution.

Procedure Inject accurately 5 μl of each of the reference solution and the test solution into the column and measure.

It contains not less than 1.0 mg of gastrodin ($C_{13}H_{18}O_7$) per capsule, referred to Rhizoma Gastrodiae.

Action To soothe the liver, subside interior *wind* and to stop convulsion.

Indications Dizziness, headache, numbness in limbs, epilepsy or convulsion due to *liver-wind* stirring internally.

Usage and dosage 2-6 capsules, 3 times a day.

Strength 0.5 g per capsule

Storage Preserve in well closed containers.

Capsulae Olei Viticis Negundo (牡荆油胶丸, Mujingyou Jiaowan)

Negundo Chastetree Oil Capsules

Negundo Chastetree Oil Capsules are the capsules prepared from Negundo Chastetree Oil with a quantity of diluent.

Description Yellow-brown and transparent capsules containing pale yollow to orange oily liquid; odour, characteristically aromatic.

Refractive index 1.485-1.500 (Appendix Ⅶ F), using the volatile oil obtained under Assay.

Identification The volatile oil obtained under Assay complies with the identification tests described under Negundo Chastetree Oil.

Other requirements Comply with the general requirements for capsules (Appendix Ⅰ L).

Assay To 100 capsules add 500 ml of acetic acid solution (1→10), carry out the method for determination of volatile oil (Appendix Ⅹ D), calculate the content of volatile oil

with 0. 897 as the relative density.
It contains not less than 85. 0 per cent and not more than 110. 0 per cent of the labelled amount of negundo chastetree oil.

Action To expel phlegm, relieve coughing and dyspnea.

Indications Chronic bronchitis.

Usage and dosage 1-2 capsules, 3 times a day.

Strength 20 mg

Storage Preserve in tightly closed containers, protected from light, and stored in a cool place.

Capsulae Radix Lamiophlomidis Ratatae (独一味胶囊)

Duyiwei Capsules

Duyiwei Capsules are the capsules prepared from Radix Lamiophlomis Ratatae.

Procedure Pulverize 1000 g of Radix Lamiophlomis Ratatae, decoct with water twice, each 1 hours. Combine the decoctions and filter. Concentrate the filtrate to a liquid extract with a relative density of 1. 30, and dry below 80℃. Add a quantity of starch to make granules. Dry and pack to 1000 capsules.

Description Hard capsules containing deep-brown granules or powder. taste, slightly bitter.

Identification To 0. 3 g of the content, add 5 ml of ethanol, heat under reflux for 10 minutes, and filter. Concentrate 2 ml of the filtrate to about 1 ml as the test solution. Prepare a solution in the same manner with 1 g of Herba Lamiophlomis ratatae reference drug as the reference drug solution. Carry out the method for thin layer chromatography (Appendix Ⅵ B), using silica gel G as the coating substance and a mixture of chloroform and methanol (4 ∶ 1) as the mobile phase. Apply separately 5 μl of each of the two solutions to the plate (non-actived). After developing and removal of the plate, dry in air, spray with phosphomolybdic acid, heat at 105℃ for about 15 minutes, the spots in the chromatogram obtained with the test solution correspond in position and colour to the spots in the chromatogram obtained with the reference drug solution.

Other requirements Comply with the general requirements for capsules (Appendix Ⅰ L).

***n*-Butanol extractives** Weigh accurately 1. 5 g of the contents, place in a beaker, add 10 ml of water to dissolve. Transfer the solution to a seperator, wash the beaker with 5 ml of water, combine the washings to the same seperator. Extract with four 30-ml quantities of *n*-butanol saturated with water, combine the extracts and wash with three 10-ml quantities of water saturated with *n*-butanol. Evaporate the *n*-butanol extracts in an evaporating dish, previously dried to constant weight, to dryness on a water bath. Dry at 105℃ for 3 hours and allow to cool in a desiccator for 30 minutes, weigh accurately and rapidly. It contains not less than 8. 0% per cent of *n*-butanol extractives.

Assay ***Total Flavone*** *Reference solution* Weigh accurately 200 mg of rutin, previously dried in vaccum to constant weight at 120℃, in a 100 ml volumetric flask, add 70 ml of 70% ethanol and heat gently to dissolve on a water bath, cool and dilute with 70% ethanol to volumn, and mix well. Transfer accurately 10 ml to a 100 ml volumetric flask, dilute to volume with water and mix well, used as the reference solution, containing 0. 2 mg of anhydrous rutin per ml.

Preparation of calibration curve Measure accurately 1, 2, 3, 4, 5 ml and 6 ml of the standard solution in 25 ml volumetric flask separately, add water for each to 6 ml, and add 1 ml of 5% sodium nitrite solution, mix well, allow to stand for 6 minutes, then add 1 ml of 10% aluminium nitrate solution, mix well and allow to stand for 6 minutes, add 10 ml of sodium hydroxide TS and dilute to volume with water. Mix well and allow to stand for 15 minutes. Carry out the method for ultraviolet spectrophotometry and colourimetry (Appendix Ⅴ A), measure the absorbance at 500 nm, taking the reagent solution as a blank, plot calibration curve, using absorbance as ordinate and concentration as abscissa.

Procedure Grind the content obtained under the test of packing variation, to fine powder, weigh accurately 0. 6 g of the powder in a 100 ml volumetric flask, add 70 ml of 70% ethanol, warm on a water bath for 30 minutes and shake constantly, cool, dilute to volume with 70% ethanol, mix well, and allow to stand for 4 hours. Transfer accurately 1 ml of the supernatant to a 25 ml volumetric flask, carry out the procedure as described under the preparation of standard curve, beginning at the words "add water for each to 6 ml...", measure the absorbance, read out the weight of anhydrous rutin in the test solution from the calibration curve, and calculate.
It contains not less than 26 mg of anhydrous rutin ($C_{27}H_{30}O_{16}$) per capsule.

Luteolin Carry out the method for high performance liquid chromatography (Appendix Ⅵ D).

Chromatographic system and system suitability Use octadecylsilane bonded silica gel as the stationary phase and a mixture of methanol and 0. 4% phosphoric acid solution (50 ∶ 50) as the mobile phase. As detector a spectrophotometer set at 350 nm. The number of theoretical plates of the column is not less than 1500, calculated with reference to the peak of luteolin.

Reference solution Dissolve a quantity of luteolin CRS, accurately weighed, in methanol to prepare a solution containing 10 μg per ml as the reference solution.

Test solution Weigh accurately 0. 15 g of the content powder, obtained under the test of weight variation, to a 25 ml volumetric flask, add 20 ml of 2. 5 mol/L solution of hydrochloric acid in methanol, ultrasonicate for 30 minutes (power 250 W, frequency 50 kHz), cool. Dilute with 2. 5 mol/L solution of hydrochloric acid in methanol to volume, and mix well, and filter. Transfer accurately 10 ml of the successive filtrate to a 50 ml round-bottomed flask, heat on a water bath at 90℃ for 30 minutes, and cool. Transfer to a 25 ml volumetric flask, dilute with methanol to volume, mix well, filter, use the successive filtrate as the test solution.

Procedure Inject accurately 5 μl of each of the reference solution and the test solution into the column and measure.
It contains not less than 0. 80 mg of luteolin ($C_{15}H_{10}O_6$) per capsule.

Action To promote blood circulation to kill pain, and resolve stagnated blood to arrest bleeding.

Indications Painful incisions with bleeding after surgery, traumatic injury and fractures, sprain of tendons and bones, rheumatalgia due to *wind-dampness*, metrorrhagia and metrostaxis, dysmenorrhea, and swollen and painful gums with bleeding.

Usage and dosage 3 capsules, 3 times a day, 7 days making a course treatment, or taken when necessary.

Precaution Be cautions about pregnant women.

Strength 0. 3 g per capsule

Storage Preserve in tightly closed containers.

Capsulae Xylaria
(乌灵胶囊，Wuling jiaonang)

Xylaria Powder Capsules

Wuling Capsules are prepared from fermented Xylaria powder.

Procedure To 330 g of Xylaria powder, pack 1000 capsules.

Description Capsules with pale brown to brown powder content; odour, characteristic; taste, slightly sweet.

Identification (1) To 2 g of capsule content, add 5 ml of ethanol solution of potassium hydroxide TS, heat boiling for 5 minutes, cool, add 4 ml water and 10 ml ether, shake thoroughly, separate 2 ml of ether layer, add 0.5 ml of 0.5% 2,2'-dipyridyl in ethanol and 0.5% ferric chloride in ethanol separately, shake thoroughly. A red colour is produced.

(2) Heat under reflux 2 g of the capsule content with 20 ml of dilute ethanol on a water bath for 2 hour, cool and filter, use the filtrate as the test solution. Prepare a solution in the same manner of 2 g of Xylaria powder reference drug as the reference drug solution. Carry out the method for thin layer chromatography (Appendix Ⅵ B), using silica gel G prepared with 0.4% solution of sodium carbonmethylcellulose and 3.85% solution of disodium hydrogen phosphate as the coating substance, and a mixture of chloroform, ethyl acetate, isopropanol, water and concentrated ammonia TS (4 : 1 : 2 : 0.1 : 0.1) as the mobile phase. Apply separately to the plate 10 μl of each of the above two solutions. After developing and removal of the plate, dry in air, and examine instantly under ultraviolet light at 365 nm. The three fluorescent spots in the chromatogram obtained with the test solution correspond in position and colour to the spots in the chromatogram obtained with the reference drug solution.

(3) Dissolve separately adenosine CRS and adenine CRS in dilute ethanol to produce two solutions containing 1 mg of adenosine and 0.5 mg of adenine per ml respectively as the reference solutions. Carry out the method for thin layer chromatography (Appendix Ⅵ B), using silica gel GF_{254} mixed with a 4% solution of sodium acetate as the coating substance and a mixture of chloroform, ethyl acetate, isopropanol, water and concentrated ammonia TS (8 : 2 : 6 : 0.3 : 0.3) as the mobile phase. Apply separately to the plate 10 μl of the test solution obtained under Identification test (2) and 1 μl of each of the reference solutions. After developing and removal of the plate, dry in air, and examine under ultraviolet light at 254 nm. The spots in the chromatogram obtained with the test solution correspond in position and colour to the spots in the chromatogram obtained with the reference solutions.

Other requirements Comply with the general requirements for capsules (Appendix Ⅰ L).

Assay ***Adenosine*** Carry out the method for high performance liquid chromatography (Appendix Ⅵ D).

Chromatographic system and system suitability Use octadecylsilane bonded silica gel as the stationary phase, and a mixture of methanol and 0.05 mol/L solution of disodium hydrogen phosphate (17 : 83) as the mobile phase. As detector a spectrophotometer set at 260 nm. The number of theoretical plates of the column is not less than 2000, calculated with the reference to the peak of adenosine.

Reference solution Weigh accurately 10 mg of adenosine CRS, in a 100 ml volumetric flask, dissolve and dilute to volume with water, and mix well. Transfer accurately 10 ml to a 100 ml volumetric flask, dilute to volume with water, and mix well (containing 10 μg of adenosine per ml).

Test solution Weigh accurately 0.5 g of the content obtained under the test of packing variation, pulverized to fine powder, in a 50 ml volumetric flask, add a quantity of water, ultrasonicate (power, 250 W; frequency, 33 kHz) for 30 minutes, cool, add water to volume, mix well, add filter. Use the successive filtrate as the test solution.

Procedure Inject accurately 10 μl of each of the reference solution and the test solution into the column respectively and measure.

It contains not less than 0.25 mg of adenosine ($C_{10}H_{13}N_5O_4$) per capsule.

Polysaccharides *Reference solution* Weigh accurately anhydrous glucose CRS, add water to prepare a solution containing 0.1 mg per ml as the reference solution.

Calibration standard Measure accurately 0.2 ml, 0.4 ml, 0.6 ml, 0.8 ml, and 1.0 ml of the reference solution in 10 ml volumetric flask separately, add accurately 1.8, 1.6, 1.4, 1.2, 1.0 ml of water separately, and add accurately 1 ml of 6% solution of phenol to each flask separately, mix well, add accurately 5 ml of sulfuric acid to each flask instantly, mix well again and place in a boiling water bath for 15 minutes, cool quickly, Carry out the method for ultraviolet and spectrophotometry (Appendix Ⅴ A), using the corresponding solvent as blank, measure the absorbance at 490 nm, plot the calibration curve, using absorbance as ordinate and concentration as abscissa.

Procedure Weigh accurately 1 g of capsule content obtained under the test of packing variation, pulverized to fine powder, in a round-bottom flask, add 30 ml of 0.1% solution of sodium dodecylsulphate accurately, weigh, heat for 2 hours under reflux, cool quickly, weigh and replenish the lost weight with water, mix well. Centrifuge (3500 rpm) instantly. Transfer accurately 10 ml of the supernatant to a flask, add 30 ml of methanol and keep in cold place for 24 hours. Centrifuge (3500 rpm), and discard the supernatant. Wash the residue with a small quantity of methanol, and then dissolved by water. Transfer the water solution to a 100 ml volumetric flask, dilute to volume and mix well. Transfer accurately 5 ml of the solution to a 50 ml volumetric flask, dilute to volume and shake well. Transfer accurately 2 ml of the solution to a test tube, carry out the method described under the preparation of standard calibration, beginning at the words "and add accurately 1 ml of 6% solution of phenol", measure the absorbance, read out the weight of anhydrous glucose from standard curve, and calculate the content of $C_6H_{12}O_6$.

It contains not less than 25 mg polysaccharides per capsule, calculated as anhydrous glucose ($C_6H_{12}O_6$).

Action To reinforce the kidney and replenish essence, and nourish the heart to anchor the mind.

Indications Insomnia, dreamfulness, amnesia, lassitude, aching and weakness of the lower back and knees due to disharmony between the heart and kidney; neurasthenia with above symptoms.

Usage and dosage 3 capsules, 3 times a day.

Strength 0.33 g per capsule

Storage Preserve in tightly closed containers.

Attached:

Xylaria Powder
(乌灵菌粉, Wuling junfen)

Xylaria Powder are the mycetes of Xylaria, which are dry powder of hypal body and prepared by deep-layer fermened.

Procedure Take some mycetes which are separated from Xylaria and prepared by deep-layer fermened.

Description Pale brown to brown powder; odour, characteristic; taste, slightly sweet.

Identification Show the same results when test with the same manners under Identification (1), (2), and (3) of Wuling Capsules.

Water Not more than 6.0 per cent (Appendix Ⅸ H).

Residue on ignition Not more than 6.5 per cent (Appendix Ⅸ J).

Assay ***Adenosine*** Accurately weigh 0.5 g of the powder, comply with the method as described under Assay (adenosine) of Wuling Capsules.
It contains not less then 0.078 per cent of adenosine ($C_{10}H_{13}N_5O_4$).

Polysaccharides Accurately weigh 1 g of the powder, comply with the method as described under Assay (polysaccharides) of Wuling Capsules.
It contains not less than 7.5 per cent of anhydrous glucose ($C_6H_{12}O_6$), refered to polysaccharides.

Usage and dosage 1 g, 3 times a day.

Storage Preserve in tightly closed containers.

Preparation Wuling Capsules

Chaihu Koufuye
(柴胡口服液)
Chaihu Mixture

Chaihu Mixture is prepared from Radix Bupleuri.

Procedure To Radix Bupleuri, pulverized to coarse powder, add 4 portions of water, macerate at 80℃ for half an hour, heat under reflux for 1 hour and then perform water steam distillation (add 4 times of water during distillation), collect a quantity of initial distillate, add sodium chloride to a content of 12%, salt out for 12 hours, redistill, collect a quantity of redistillate, add propylene glycol, shake and allow to stand. Continue to collect a quantity of redistillate. Filter and concentrate the above decoction to a quantity, refrigerate for 24 hours, filter, to the filtrate add sucrose, warmly heat to dissolve, cool, combine with redistillate, filter, add flavoring essence and successive distillate to a fixed volume, filter with G3 sintered glass filter, pack, seal and sterilize at 100℃ for 30 minutes.

Description A brownish-red liquid; taste, slightly sweet and bitter.

Identification (1) Distill 10 ml of the oral liquid with 50 ml of water in a 250 ml flask, collect 10 ml of the distillate. To 2 ml of the distillate, add 2 drops of fuchsin-sulfurous acid TS, mix well and stand for 5 minutes; a rose colour is produced.
(2) Evaporate 5 ml of the oval liquid to dryness on a water bath, dissolve the residue in 10 ml of methanol. To 0.5 ml of the supernatant, add 0.5 ml of *p*-dimethylamino-benzaldehyde solution in methanol (1→30), mix well, and then add 2 ml of phosphoric acid, mix well and allow to stand in a hot water bath; a pale reddish-purple colour is produced.
(3) Measure 30 ml of the oral liquid in a separator, extract with three 15-ml quantities of ether, discard ether solutions, extract with three 15-ml quantities of *n*-butanol saturated with water again. Combine *n*-butanol extracts and add a same quantity of ammonia TS, mix well, allow to stand. Separate the supernatant, recover *n*-butanol to dryness in vacuum, dissolve the residue in 1 ml of methanol as the test solution. Heat under reflux 3 g of Radix Bupleuri reference drug, in 30 ml of ether for 30 minutes, discard ether solution. To the residue, expel ether, add 30 ml of methanol and heat under reflux for 30 minutes, filter and recover methanol to dryness in vacuum. Dissolve the residue in 15 ml of water, carry out the same manner as described under the preparation of the test solution, begining at the words "extract with three 15-ml quantities of *n*-butanol saturated with water...", to prepare the reference drug solution. Dissolve saikosaponin a CRS and saikosaponin d CRS in methanol to produce a mixture solution containing 0.5 ml of each per ml as the reference solution. Carry out the method for thin layer chromatography (Appendix Ⅵ B), using silica gel G mixed with sodium carboxymethylcellulose as the coating substance and the lower layer of a mixture of chloroform, methanol and water (13∶7∶2, stand bellow 10℃) as the mobile phase. Apply separately 5 μl each of the above three solutions to the plate. After developing and removal of the plate, dry in air. Spray with 1% *p*-dimethylaminobenzaldehyde in sulfuric acid-ethanol (1→10), heat at 70℃ to the spots clear. Three main spots in the chromatogram obtained with the test solution correspond in position and colour to the spots in the chromatogram obtained with the reference drug solution. The spots in the chromatogram obtained with the test solution correspond in position and colour to the spots in the chromatogram obtained with the reference solution. Examine under ultraviolet light at 365 nm, showing same yellow fluorescent spots.

Relative density Not less than 1.01 (Appendix Ⅶ A).

pH value 3.0-5.0 (Appendix Ⅷ G).

Specific absorbance Measure accurately 25 ml of the oral liquid in a 250 ml flask, add 50 ml of water, heat to distill (the speed of distillation is adjusted by distillating the fixed volume in 20-30 minutes). Collect the distillate in a 50 ml volumetric flask, stop distillating while the distillate is almost to 50 ml, dilute with water to volume and mix well. Transfer accurately 3 ml in a 10 ml volumetric flask, add water to volume, mix well. Transfer accurately another 3 ml in a evaporating dish, evaporate to dryness on a water bath, dissolve the residue in water and transfer to a 10 ml volumetric flask, dilute with water to volume, mix well as a blank. Carry out the method for ultraviolet spectrophotometry and colourimetry (Appendix Ⅴ A), measure the absorbance at 277 nm, the value of absorbance is not less than 0.50.

Other requirements Complies with the general requirements for mixtures (Appendix Ⅰ J).

Action To release the exterior and relieve fever.

Indications Common cold with fever due to external *wind-heat*, with manifestations of fever, flushed face, headache, general pain, dry mouth and thirst.

Usage and dosage 10-20 ml, 3 times a day; appropriate reduction of the dosage for children.

Strength 10 ml per ampule (equivalent to 10 g of the crude drug)

Storage Preserve in tightly closed containers, stored in a cool place.

Chaihu Shugan Wan
(柴胡舒肝丸)

Chaihu Shugan Pills

Ingredients Poria 100 g; Fructus Aurantii (stir-baked) 50 g; Fructus Amomi Rotundus 40 g; Radix Paeoniae Alba (stir-baked with wine) 50 g; Radix et Rhizoma Glycyrrhizae 50 g; Rhizoma Cyperi (processed with vinegar) 75 g; Pericarpium Citri Reticulatae 50 g; Radix Platycodi 50 g; Cortex Magnoliae Officinalis (processed with ginger) 50 g; Fructus Crataegi (stir-baked) 50 g; Radix Saposhnikoviae 50 g; Massa Medicata Fermentata (stir-baked) 50 g; Radix Bupleuri 75 g; Radix Scutellariae 50 g; Herba Menthae 50 g; Caulis Perillae 75 g; Radix Aucklandiae 25 g; Semen Arecae (stir-baked) 75 g; Rhizoma Sparganii (processed with vinegar) 50 g; Radix et Rhizoma Rhei (stir-baked with wine) 50 g; Pericarpium Ciri Reticulatae Viride (stir-baked) 50 g; Radix Angelicae Sinensis 50 g; Rhizoma Pinelliae (processed with ginger) 75 g; Radix Linderae 50 g; Rhizoma Curcumae (processed) 50 g.

Procedure Pulverize the above twenty-five ingredients to fine powder, sift and mix well. To each 100 g of the powder add 180-190 g of refined honey to make big honeyed pills.

Description Blackish-brown big honeyed pills; taste, sweet and bitter.

Identification (1) Microscopical: Clusters of calcium oxalate large, 60-140 μm in diameter. Irregular branched masses colourless, dissolved in choral hydrate solution; hyphae colourless or pale brown, 4-6 μm in diameter. Fibre bundles surrounded by parenchymatous cells containing prisms of calcium oxalate, forming crystal fibres. Bast fibres pale yellow, fusiform, with thickened walls and fine pit-canals. Fragments of endosperm cells colourless, with relatively thickened walls and many large subrounded pits.

(2) Heat under reflux 2 pills, ground well with 8 g of kieselguhr, in 50 ml of ether on a water bath at a lower temperature for 1 hour. Filter and evaporate the filtrate to dryness, dissolve the residue in 1 ml of ethyl acetate as the test solution. To 0.5 g of Radix Aucklandiae reference drug, add 10 ml of ether to produce a solution as the reference drug solution in the same manner. Carry out the method for thin layer chromatography (Appendix Ⅵ B), using silica gel G as the coating substance and a mixture of cyclohexane and acetone (10 : 3) as the mobile phase. Apply separately 5-10 μl of the test solution and 1 μl of the reference drug solution to the plate. After developing and removal of the plate, dry in air. Spray with a 5% solution of vanillin in sulfuric acid, heat to the spots clear. The blue spots in the chromatogram obtained with the test solution correspond in position and colour to the spots in the chromatogram obtained with the reference drug solution.

(3) Grind well 3 pills with 10 g of kieselguhr to fine powder, add 90 ml of chloroform and heat under reflux for 1 hour. Filter and extract the filtrate with three 20-ml quantities of 2% sodium hydroxide solution. Combine the extracts, adjust the pH value to 1-2 with dilute hydrochloric acid. Extract with three 20-ml quantities of chloroform. Combine the chloroform extracts and wash with water, and evaporate to dryness after dehydrating with anhydrous sodium sulfate. Dissolve the residue in 1 ml of dehydrated ethanol as the test solution. Dissolve magnolol CRS and honokiol CRS in dehydrated ethanol to produce a mixture containing 1 mg of each per ml as the reference solution. Carry out the method for thin layer chromatography (Appendix Ⅵ B), using silica gel GF_{254} prepared with 1% sodium hydroxide solution as the coating substance and a mixture of benzene and ethyl acetate (6 : 1) as the mobile phase. Apply separately to the plate 5 μl of each of the above two solutions, allow to stand in a condition of relative humidity >80% for 15 minutes and then develop immediately. After developing and removal of the plate, dry in air, examine under ultraviolet light at 254 nm. The spots in the chromatogram obtained with the test solution correspond in position and colour to the spots in the chromatogram obtained with the reference solution. Spray with a 5% solution of vanillin in sulfuric acid, heat at 105 ℃ to the spots clear. The spots show reddish-brown or purplish-brown under sunlight.

Other requirements Comply with the general requirements for pills (Appendix Ⅰ A).

Action To soothe the liver and regulate *qi* flow, and relieve distension to kill pain.

Indications Fullness and constriction in the chest and hypochondria, indigestion and casting up of gastric acid due to stagnation of *liver-qi*.

Usage and dosage 1 pill, twice a day.

Strength 10 g per pill

Storage Preserve in tightly closed containers.

Chanfukang Keli
(产复康颗粒)

Chanfukang Granules

Ingredients Herba Leonuri; Radix Angelicae Sinensis; Radix et Rhizoma Ginseng; Radix Astragali; Radix Polygoni Multiflori; Semen Persicae; Pollen Typhae; Radix Rehmanniae Preparata; Rhizoma Cyperi (processed with vinegar); Thallus Eckloniae; Rhizoma Atractylodis Macrocephalae; Auricularia.

Procedure Decoct the above twelve ingredients with water twice, 2 hours for each time, combine the decoctions, filter and concentrate to a thin extract with a relative density of 1.25-1.28 (50-60℃). To the thin extract, add a quantity of brown sugar and dextrin, make granules and dry, then make up to 600 g.

Description Brown granules; taste, sweet and slightly bitter.

Identification (1) Dissolve 2 g of the granules in 10 ml of 1% hydrochloric acid solution and filter, to 1 ml of the filtrate add 1 drop of silicotungstic acid TS, a greyish-white precipitate is produced.

(2) Heat under reflux 6 g of the granules in 25 ml of methanol for 1 hour, evaporate methanol of the extract, dissolve the residue in 50 ml of water by heating, cool. Extract with three 15-ml quantities of ether, combine the ether solutions, extract with three 15-ml quantities of 2% sodium carbonate solution. Separate the alkaline solution, adjust pH value to 2-3 with hydrochloric acid. Extract with 15 ml of benzene, discard the benzene solution and extract again with three 15-ml quantities of ether. Combine the ether extracts and evaporate to dryness, dissolve the residue in 1 ml of methanol as the test solution. Dissolve ferulic acid CRS in methanol to produce a solution containing 1 mg per ml as the reference solution. Carry out the method for thin layer chromatography (Appendix Ⅵ B), using silica gel G containing sodium carboxymethylcellulose as the coating substance and a mixture of benzene, glacial acetic acid and methanol (30:1:3) as the mobile phase. Apply separately 5 μl each of the above two solutions to the plate. After

developing and removal of the plate, dry in air, examine under ultraviolet light at 365 nm. The fluorescent spot in the chromatogram obtained with the test solution corresponds in position and colour to the spot in the chromatogram obtained with the reference solution.

(3) To 10 g of the granules, add 25 ml of water, shake and filter. Concentrate the filtrate to 10 ml as the test solution. Macerate 3 g of Radix Astragali reference drug with 15 ml of water overnight, filter and concentrate the filtrate to 5 ml as the reference drug solution. Carry out the method for thin layer chromatography (Appendix Ⅵ B), using silica gel G as the coating substance and a mixture of ethanol, concentrated ammonia TS and water (7 : 1 : 2) as the mobile phase. Apply separately 5 μl each of the above two solutions to the plate. After developing and removal of the plate, dry in air, spray with 3% ninhydrin solution in ethanol, heat at 105℃ for about 10 minutes. The spots in the chromatogram obtained with the test solution correspond in position and colour to the spots in the chromatogram obtained with the reference drug solution.

Other requirements Comply with the general requirements for granules (Appendix Ⅰ C).

Assay *Reference solution* Dissolve a quantity of stachydrine hydrochloride CRS, accurately weighed, in hydrochloric acid solution (0.1 mol/L) to prepare a solution containing 1 mg per ml as the reference solution.

Test solution Weigh accurately 12 g of the powder, obtained under the weight variation test and triturated, in a stoppered conical flask, add 50 ml of ethanol, accurately measured, ultrasonicate for 30 minutes, filter. Discard the initial filtrate, transfer 25 ml, accurately measured, of the successive filtrate to a 50 ml beaker, evaporate to dryness on a water bath, dissolve the residue in 10 ml, accurately measured, of hydrochloric acid solution (0.1 mol/L).

Procedure To the reference solution and the test solution, separately add 0.5 g of activated charcoal, heat on a water bath for 1 minute, stir and filter to 25 ml volumetric flasks separately. Wash the beaker and filter funnel with 10 ml of hydrochloric acid solution (0.1 mol/L) in portions, combine the washings to same flask. Transfer accurately 20 ml of hydrochloric acid solution (0.1 mol/L, as a blank) to another 25 ml volumetric flask. To each volumetric flask add 3 ml of freshly prepared 2% ammonium reineckate solution, accurately measured, mix well and dilute to volume with hydrochloric acid solution (0.1 mol/L). Mix well, allow to stand in an ice bath for 1 hour, filter through a dry filter paper, discard the initial filtrate. Carry out the method for ultraviolet spectrophtometry and colourimetry (Appendix Ⅴ B), measure the absorbance of the successive filtrate at 525 nm, subtract the absorbance of blank from the absorbance of the reference preparation (or the test preparation), calculate the content of alkaloids. It contains not less than 3.0 mg of alkaloids for each bag, calculated as stachydrine hydrochloride ($C_7H_{13}NO_2 \cdot HCl$).

Action To reinforce *qi* and nourish blood, and expel stagnated blood to promote the reproduction of blood.

Indications Lochiorrhea due to a deficiency *of qi* and stagnation of blood, with manifestations of excessive bleeding after childbirth, lassitude, weakness and aching in the lower back and legs.

Usage and dosage 20 g, 3 times a day; taken after dissolved in boiling water; 5-7 days making one course of treatment. Could be administrated for a long time during the puerperal period.

Strength 10 g per pack

Storage Preserve in tightly closed containers.

Changweining Pian
(肠胃宁片)

Changweining Tablets

Ingredients Radix Codonopsis 96 g; Rhizoma Atractylodis Macrocephalae 64 g; Radix Astragali 96 g; Halloysitum Rubrum 190 g; Rhizoma Zingiberis (carbonized) 38 g; Radix Aucklandiae 38 g; Fructus Amomi 38 g; Fructus Psoraleae 96 g; Radix Puerariae Lobatae 96 g; Radix Saposhnikoviae 38 g; Radix Paeoniae Alba 64 g; Rhizoma Corydalis 64 g; Radix Angelicae Sinensis 64 g; Catechu 32 g; Pericarpium Papaveris 38 g; Radix et Rhizoma Glycyrrhizae Praeparata Cum Melle 64 g.

Procedure Pulverize Rhizoma Zingiberis and Radix Aucklandiae to fine powder, pulverize Halloysitum Rubrum to very fine powder. Distil volatile oil of Fructus Amomi, to the volatile oil and residue of distillation for latter use. Pulverize Radix Puerariae Lobatae, Rhizoma Atractylodis Macrocephalae, Radix Paeoniae Alba, Fructus Psoraleae, Pericarpium Papaveris, Radix et Rhizoma Glycyrrhizae Praeparata Cum Melle and Catechu to coarse powder. Percolate with 70% ethanol, Carry out the percolation method in Liquid Extracts and Extracts (Appendix Ⅰ O) collect the percolation, and recover ethanol. Decoct the Fructus Amomi residue and other five ingredients with water twice, 3 hours for the first time and 2 hours for the second time, filter. Combine the filtrate and the ethanol percolation, concentrate to a quantity and mix with the above fine powder of Rhizoma Zingiberis and Radix Aucklandiae, stir well, dry, pulverize to fine powder, mix with the very fine powder of Halloysitum Rubrum, mix well to make granules, spry with the volatile oil, make to 1000 tablets and coat with sugar.

Description Sugar coated tablets with blackish-brown core; odour, aromatic; taste, slightly bitter.

Identification (1) To 10 tablets with coating removed, pulverized to powder, add 50 ml of ether, ultrasonicate for 5 minutes, discard the ether, dry the residue, add 30 ml of methanol, ultrasonicate for 15 minutes, filter. Evaporate the filtrate to dryness, dissolve the residue in 20 ml of water, filter by cotton, and extract by shaking the filtrate with two 25-ml quantities of ethyl acetate, discard the ethyl acetate layer, and extract by shaking the filtrate with two 25-ml quantities of *n*-butanol saturated with water. Combine the *n*-butanol extracts, extract with 30 ml of water saturated by *n*-butanol, evaporate the *n*-butanol layer to dryness, dissolve the residue in 5 ml of methanol, apply the methanol to a column (1.5 cm in internal diameter) previously packed with neutral aluminium oxide (100-200 mesh, 2 g), elute with 40 ml of methanol, and collect the elute, evaporate the elute to dryness, and dissolve the residue in 0.5 ml of methanol as the test solution. Dissolve paeoniflorin CRS in methanol to produce a solution containing 1 mg per ml as the reference solution. Carry out the method for thin layer chromatography (Appendix Ⅵ B), using silica gel G as the coating substance and the mixture of chloroform, ethyl acetate, methanol and formic acid (40 : 5 : 10 : 0.2) as the mobile phase. Apply separately 10 μl of the two solutions to the plate. After developing and removal of the plate, dry in air. Spray with 5% vanillin solution in sulfuric acid, heat at 105℃ to the spots clear. The spot in the chromatogram obtained with the test solution corresponds in position and colour to the spot in the chromatogram obtained with the reference solution.

(2) To 20 tablets with coating removed, pulverized to powder, add 50 ml of methanol, heat on a water bath to

dissolved, filter. Apply the filtrate to a column (1-1.5 cm in internal diameter) previously packed with neutral aluminium oxide (100-200 mesh, 5 g), elute with 100 ml of 40% methanol, and collect the eluate, evaporate the eluate to dryness on a water bath, dissolve the residue in 30 ml of water, extract by shaking with *n*-butanol saturated with water twice, 20 ml for each time. Combine the *n*-butanol extracts, extract with ammonia TS twice, 20 ml for each time, evaporate the *n*-butanol layer to dryness on a water bath, and dissolve the residue in 0.5 ml of methanol as the test solution. Dissolve astragaloside Ⅳ CRS in methanol to produce a solution containing 1 mg per ml as the reference solution. Carry out the method for thin layer chromatography (Appendix Ⅵ B), using silica gel G as the coating substance and the lower layer of the mixture of chloroform, methanol and water (13∶7∶2) as the mobile phase. Apply separately 5 μl of the test solution and the reference solution to the plate. After developing and removal of the plate, dry in air. Spray with 10% solution of sulfuric acid in ethanol, heat at 105℃ for about 5 minutes. Examine separately in daylight and ultraviolet light at 365 nm. The spot in the chromatogram obtained with the test solution corresponds in position and colour to the spot in the chromatogram obtained with the reference solution examine in daylight; and the fluorescent spot in the chromatogram obtained with the test solution corresponds in position and colour to the fluorescent spot in the chromatogram obtained with the reference solution under ultraviolet light.

(3) To 20 tablets with coating removed, pulverized to fine powder, add 40 ml of ether, shake continuously for 1 hour, and filter, keep the drug residue for further use, evaporate the filtrate to dryness, and dissolve the residue in 1 ml of ethyl acetate as the test solution. Dissolve psoralen CRS in ethyl acetate to produce a solution containing 1 mg per ml as the reference solution. Carry out the method for thin layer chromatography (Appendix Ⅵ B), using silica gel G mixed with sodium carboxymethylcellulose as the coating substance and the mixture of *n*-hexane and ethyl acetate (4∶1) as the mobile phase. Apply separately 5 μl of the above two solutions to the plate. After developing and removal of the plate, dry it in air, examine under ultraviolet light at 254 nm. The fluorescent spot in the chromatogram obtained with the test solution corresponds in position and colour to the fluorescent spot in the chromatogram obtained with the reference solution.

(4) To the drug residue obtained from Identification (3), recover the solvents, add 30 ml of methanol, ultrasonicate for 20 minutes, filter. Evaporate the filtrate to dryness, add 20 ml of water, stir to dissolved, filter by cotton, adjust the filtrate to alkaline with concentrated ammonia TS, extract by shaking with three 20-ml quantities of ether. Combine the ether extracts, evaporate to dryness, and dissolve the residue in 1 ml of methanol as the test solution. Dissolve tetrahydropalmatine CRS in methanol to produce a solution containing 1 mg per ml as the reference solution. Carry out the method for thin layer chromatography (Appendix Ⅵ B), using silica gel G mixed with 1% solution of sodium hydroxide as the coating substance and the mixture of *n*-hexane, chloroform and methanol (15∶8∶2) as the mobile phase. Apply separately 10-15 μl of the test solutions and 2 μl of the reference solution to the plate. After developing in a chamber pre-equilibrated with mobile phase and removal of the plate, dry in air, fumigate the plate in iodine vapour, examine under ultraviolet light at 365 nm. The fluorescent spot in the chromatogram obtained with the test solution corresponds in position and colour to the fluorescent spot in the chromatogram obtained with the reference solution.

Other requirements Comply with the general requirements for tablets (Appendix Ⅰ D).

Assay Carry out the method for high performance liquid chromatography (Appendix Ⅵ D).

Chromatographic system and system suitability Use octadecylsilane bonded silica gel as the stationary phase and the mixture of acetonitrile and 0.1% solution of phosphoric acid (11∶89) as the mobile phase. As detector a spectrophotometer set at 250 nm, the number of theoretical plates for the column is not less than 3000, calculated with the reference to the peak of puerarin.

Reference solution Dissolve a quantity of puerarin CRS, accurately weighed, in ethanol to produce a solution containing 40 μg per ml as the reference solution.

Test solution To 10 tablets with coating removed, weighed accurately, pulverized to fine powder, weighed accurately a proper quantity of the powder (corresponding about 2 tablets) to a stopper conical flask. Add accurately 25 ml of dilute ethanol, stopped tightly, weighed accurately, ultrasonicate (power 250 W, frequency 33 kHz) for 20 minutes, cool, weighed accurately again, replenished the lost weight with dilute ethanol, mix well and filter. Discard the initial filtrate, and use the successive filtrate as the test solution.

Procedure Inject accurately 5 μl of the reference solution and the test solution separately into the column and calculate the content.

It contains not less than 0.40 mg of puerarin ($C_{21}H_{20}O_9$) per tablet, referred to Radix Puerariae Lobatae.

Action To invigorate the spleen and kidney, warm the *middle-energizer* to kill pain, and astringe the intestines to stop diarrhea.

Indications Diarrhea due to a deficiency of *spleen-yang* and *kidney-yang*, with manifestations of abnormal bowels movement, or dawn diarrhea with mucous stools, sometimes accompanied with abdominal distending pain, discomfort in the epigastrium, sag and fullness of the lower abdomen; chronic colitis, ulcerative colitis and intestinal dysfunction with above symptoms.

Usage and dosage 4-5 tablets, 3 times a day.

Precaution Avoid sour, cold and irritant foods. Be cautious about children.

Storage Preserve in tightly closed containers.

Chenxiang Huaqi Wan (沉香化气丸)

Chenxiang Huaqi Pills

Ingredients Lignum Aquilariae Resinatum 25 g; Radix Aucklandiae 50 g; Herba Pogostemonis 100 g; Rhizoma Cyperi (processed with vinegar) 50 g; Fructus Amomi 50 g; Pericarpium Citri Reticulatae 50 g; Rhizoma Curcumae (processed with vinegar) 100 g; Massa Medicata Fermentata (stir-baked) 100 g; Fructus Hordei Germinatus (stir-baked) 100 g; Radix et Rhizoma Glycyrrhizae 50 g.

Procedure Pulverize the above ten ingredients to fine powder, sift, mix well; make pills with water and dry at a low temperature.

Description Greyish-brown to yellowish-brown watered pills; odour, aromatic; taste, slightly sweet and bitter.

Identification (1) Microscopical: Gelatinized starch granule masses pale yellow. Fibre tracheids with slightly thickened

walls and bordered pits, pit-apertures V-shaped or cross-shaped. Wood fibres in bundles, long-fusiform, 16-24 μm in diameter, walls slightly thickened, pit-apertures transversely cleft, cross-shaped or V-shaped. Fibre bundles surrounded by parenchymatous cells containing prisms of calcium oxalate, forming crystal fibres. Non-glandular hairs 1-6 celled, with warty protuberances. Secretory cells subrounded, containing pale yellowish-brown to reddish-brown secretion, surrounded by radially arranged cells; Sclerenchymatous cells of endotesta yellowish-brown or brownish-red, subpolygonal in surface view, walls thickened, lumen containing silica body. Prisms of calcium oxalate abundant in parenchyma. Epidermal cells with longitudinal fissures, arranged with 1 long cell connected to 2 short cells alternately, the walls of long cells thickened, sinuous and lignified.

(2) Macerate overnight 20 g of the pills, triturated, with 200 ml of water in a 500 ml round-bottom flask, and connect the apparatus for determination of volatile oil. Add water through the top of reflux condenser until the graduated tube of B is filled and overflows to flask A, then add 2 ml ethyl acetate to the graduated tube of B, heat under reflux. transfer the collected liquid in the determination tube to a separator. Extract with 2 ml of ethyl acetate, shake and separate the ethyl acetate extract as the test solution. Dissolve patchouli alcohol CRS and α-cyperone CRS in ethyl acetate separately to produce solutions containing 2 mg per ml as the reference solutions. Carry out the method for thin layer chromatography (Appendix Ⅵ B), using silica gel G as the coating substance and a mixture of benzene and ethyl acetate (60 : 1) as the mobile phase. Apply separately to the plate 2 μl of the test solution and 1 μl of the reference solution. After developing and removal of the plate, dry in air. Spray with a 5% solution of ferric chloride in ethanol acidified with hydrochloric acid, and heat at 105℃ for about 5 minutes. The spots in the chromatogram obtained with the test solution correspond in position and colour to the spots in the chromatogram obtained with the reference solutions.

(3) Pulverize 8 g of the pills to powder, add 100 ml of ether, ultrasonicate for 20 minutes, and filter, evaporate the filtrate to dryness, dissolve the residue in 2 ml of ethyl acetate as the test solution. Dissolve dehydrocostus lactone CRS in ethylacetate to produce a solution containing 0.5 mg per ml as the reference solution. Carry out the method for thin layer chromatography (Appendix Ⅵ B coating), using silica gel G mixed with sodium carboxyme thylcellulose as the coating substance and a mixture of chloroform-cyclohexane (5 : 1) as the mobile phase. Apply separately 5 μl each of the above two solutions to the plate. After developing and removal of the plate, dry in air. Spray with a 5% solution of vanillin in sulfuric acid. The spots in the chromatogram obtained with test solution correspond in position and colour to the spots in the chromatogram obtained with reference solution.

Other requirements Comply with the general requirements for pills (Appendix Ⅰ A).

Volatile ether extractives Weigh accurately about 2 g of the coarse powder triturated, carry out the determination of ether extractives (Appendix Ⅹ A). It contains not less than 0.40 percent of volatile ether extractives.

Assay Carry out the method for high performance liguid chromatography (Appendix Ⅵ D).

Chromatographic system and system suitability Use octadecylsilane bonded silica gel as the stationary phase and a mixture of acetonitrile and 0.1% phosphoric acid solution (20 : 80) as the mobile phase. As detector a spectrophotometer set at 283 nm. The number of theoretical plates of the column is not less than 1500, calculated with reference to the peak of hesperidin.

Reference solution Dissolve a quantity of hesperidin CRS, accurately weighed, in methanol to produce a solution containing 50 μg per ml as the reference solution.

Test solution Weigh accurately 0.5 g of the powder, to a Soxhlet's extractor, add a quantity of methanol, heat under reflux for 3 hours. Transfer the extracts to a 50 ml volumetric flask, wash the container with a quantity of methanol for several times, combine the washings with the extracts to the same flask, dilute with methanol to volume, and mix well. Filter and use the successive filtrate as the test solution.

Procedure Inject accurately 10 μl of each of the reference solution and the test solution into the column and calculate the content.

It contains not less than 3.0 mg of hesperidin ($C_{28}H_{34}O_{15}$) per gram, referred to Pericarpium Citri Reticulatae.

Action To regulate *qi* flow and soothe the liver, and remove the retained and harmonize the stomach.

Indications Distending pain in *the* stomach and abdomen, fullness in the chest, anorexia, belching and casting up of gastric acid due to stagnation of *qi* in the liver and stomach.

Usage and dosage 3-6 g, 2 twice a day.

Precaution Be cautious about pregnant women.

Storage Preserve in well closed containers, protected from moisture.

Chitong Xiaoyanling Keli (齿痛消炎灵颗粒)

Chitong Xiaoyanling Granules

Ingredients Gypsum Fibrosum 200 g; Herba Schizonepetae 80 g; Radix Saposhnikoviae 80 g; Pericarpium Citri Reticulatae Viride 100 g; Cortex Moutan 100 g; Radix Rehmanniae 150 g; Indigo Naturalis 100 g; Radix et Rhizoma Asari 60 g; Radix Angelicae Dahuricae 50 g; Radix Glycyrrhizae 60 g.

Procedure Distil volatile oil of Herba Schizonepetae, Radix et Rhizoma Asari and Radix Angelicae Dahuricae, and keep water solution for further use. Carry out the method of percolation as described under liquid and extracts (Appendix Ⅰ O), macerate Indigo Naturalis with 90% ethanol for 48 hours, and percolate. Recover ethanol, and concentrate to a quantity. Decoct the other six ingredients with water for two times, 1.5 hours for each, combine the decoction, and filter. Combine the filtrate with the above water solution and the percolate, and concentrate to a quantity. Add a quantities of sucrose and dextrin, make granules, dry, spray with the above volatile oil, mix thoroughly, and make 1000 g; or add a quantities of dextrin and 10 g of stevioside, make granules, dry, spray with the above volatile oil, mix thoroughly, and make 500 g.

Description Yellowish brown to brown granules; taste, sweet, slightly bitter; or taste slightly bitter (without sucrose).

Identification (1) Grind 10 g or 5 g (without sucrose) to fine powder, add 20 ml of ether, stopper, and shake for 15 minutes. Stand for 1 hour, filter, evaporate the filtrate, and dissolve the residue in 1 ml of chloroform as the test solution. Dissolve a quantity of Indirubin CRS in chloroform to produce a solution containing 1 mg per ml as the reference solution. Carry out the method for thin layer chromatography (Appendix Ⅵ B), using silica gel G mixed

with sodium carboxymethylcellulose as the coating substance and a mixture of benzene, chloroform and acetone (5 : 4 : 1) as the mobile phase. Apply separately 10 μl of the two solutions to the plate. After developing and removal of the plate, dry in air. The spot in the chromatogram obtained with the test solution corresponds in position and colour to the spot in the chromatogram obtained with the reference solution.

(2) Grind 10 g or 5 g (without sucrose) to fine powder, add 20 ml of methanol, and heat under reflux for 20 minutes. Filter and use the filtrate as the test solution. Dissolve a quantity of hesperidin CRS in methanol to produce a saturated solution as the reference solution. Carry out the method for thin layer chromatography (Appendix Ⅵ B), using silica gel G mixed with sodium carboxymethylcellulose as the coating substance. Apply separately 10 μl of the two solutions to the plate. After developing 4.5 cm with a mixture of ethyl acetate, methanol and water (100 : 17 : 13) as the mobile phase, removal of the plate, and dry in air. Develop again with the upper layer of toluene, ethyl acetate, formic acid and water (20 : 10 : 1 : 1) to 12 cm, removal of the plate, dry in air, spray with aluminium chloride TS and examine under ultraviolet light at 365 nm. The spot in the chromatogram obtained with the test solution corresponds in position and colour to the spot in the chromatogram obtained with the reference solution.

Other requirements Comply with the general requirements for granules (Appendix Ⅵ D).

Assay Carry out the method for high performance liquid chromatography (Appendix Ⅵ D).

Chromatographic system and system suitability Use octadecylsilane bonded silica gel as the stationary phase and a mixture of methanol and water (35 : 65) as the mobile phase. As detector a spectrophotometer set at 283 nm. The number of theoretical plates of the column is not less than 1000, calculated with the reference to the peak of hesperidin.

Reference solution Dissolve a quantity of hesperidin CRS, weighed accurately, in methanol to produce a solution containing 80 μg of per ml.

Test solution Pulverize the granules, obtained under the test of packing variation, to fine powder, weigh accurately 2 g or 1 g (without sucrose) in a stopper conical flask, add accurately 25 ml of methanol, stopper, weigh, ultrasonicate (power 250 W, frequency 33 kHz) for 1 hour, allow to cool, weigh again, replenish the lost weight with methanol, and mix thoroughly. Filter, and use the filtrate as the test solution.

Procedure Inject accurately 10 μl of each of the reference solution and the test solution into the column, and calculate the content.

It contains not less than 16.0 mg of hesperidin ($C_{28}H_{34}O_{15}$) per bag, referred to Pericarpium Citri Reticulatae Viride.

Action To disperse *wind* and clear *heat*, and cool blood and kill pain.

Indications Headache, fever, dry mouth, foul breath, constipation and swollen painful gums due to retained *heat* in the spleen and stomach and attack of the upper part of the body by *wind-heat*; acute pericoronitis of the wisdom teeth, acute gingivitis, acute periodontitis and acute pulpitis with above symptoms.

Usage and dosage 1 pack, 3 times a day, double dosage for the first time.

Precaution Aavoid wine and pungent food.

Strength (1) 20 g (2) 10 g (without sucrose) per pack

Storage preserve in tightly closed container.

Chuanbei Pipa Tangjiang (川贝枇杷糖浆)

Chuanbei Pipa Syrup

Ingredients Extractum Fritillariae Cirrhosae Liquidum 45 ml; Radix Platycodi 45 g; Folium Eriobotryae 300 g; Mentholum 0.34 g.

Procedure Pulverize 45 g of Bulbus Fritillariae Cirrhosae to coarse powder and carry out the percolation as described under the liquid extracts and extracts (Appendix Ⅰ O). Macerate the coarse powder in 70% ethanol for 5 days and percolate slowly. Collect 38 ml of the initial percolate in a separate container and continue to percolate until the soluble constituents are completely percolated. Concentrate the successive percolate to a quantity, mix with the initial percolate, continue to concentrate to 45 ml and filter. Decoct Radix Platycodi and Folium Eriobotryae with water for two times (2.5 and 2 hours respectively). Combine the decoctions, filter and concentrate to a quantity, add 400 g of sucrose and a quantity of antiseptic agent, boil to dissolve and filter. Mix the filtrate with the Extractum Fritillariae Cirrhosae Liquidum, cool, add Mentholum and a quantity of the solution of almond essence in ethanol with stiring, add water to make a volume of 1000 ml and stir well.

Description A brownish-red thick liquid; odour, aromatic; taste, sweet, slightly bitter, and cool.

Identification Extract 20 ml with three 15-ml quantities of *n*-butanol saturated with water, combine the *n*-butanol extracts, and evaporate to dryness. Dissolve the residue in 3-5 ml of water, cool, and apply to a small column (15 mm in diameter, 8 cm in length) packed with macroporous resin D101, pre-elute with 50 ml of water. Elute with dilute ethanol TS, and collect the eluates. Evaporate to dryness and dissolve the residue in 1 ml of methanol as the test solution. Decoct Folium Eriobotryae reference drug with 100 ml water for 1 hour, filter. Prepare a solution of filtrate in the same manner as the reference drug solution. Carry out the method for thin layer chromatography (Appendix Ⅵ B coating), using silica gel G as the coating substance and a mixture of cyclohexane, ethylacetate, and glacial acetic acid (8 : 4 : 0.1) as the mobile phase. Apply in strips separately 10-20 μl of each of the above two solutions to the plate. After developing and removal of the plate, dry in air. Spray with a 5% solution of vanillin in sulfuric acid. The spots in the chromatogram obtained with test solution correspond in position and colour to the spots in the chromatogram obtained with reference solution.

Relative density Not less than 1.13 (Appendix Ⅶ A).

Other requirements Comply with the general requirements for syrups (Appendix Ⅰ H).

Assay Carry out the method for gas chromatography (Appendix Ⅵ E).

Chromatographic system and system suitability Use capillary column of macrogol (0.25 μm in internal diameter, and 30 meter long); maintain injector temperature at 250℃ and detector temperature at 250℃. The split ratio is 25 : 1. The number of theoretical plates of the column is not less than 5000, calculated with reference to the peak of naphthalene.

Correction factor Dissolve a quantity of naphthalene, accurately weighed, in cyclohexane to prepare a solution containing 15 mg per ml as the internal standard solution. Dissolve about 75 mg of menthplum CRS, weighed

accurately, in a 5 ml volumetric flask, add a quantity of cyclohexane to dissove and dilute to volumn, mix well. Measure accurately 1 ml, in a 20 ml volumetric flask, add accurately 1 ml of the internal standard solution, dilute to volumn with cyclohexane, and mix well. Inject accurately 1 μl of the solution into the column, calculate the correction factor for mentholum.

Procedure Measure accurately 50 ml and add 250 ml of water. Carry out the method for determination of volatile oil (Appendix Ⅵ D). Add water through the top of the apparatus until fills the collector and overflows to flask, then add 3 ml of cyclohexane, connect to the reflux condenser, heat to boil and keep boiling for 4 hours, cool, and transfer the liquid from the apparatus to a separator. Wash the inner wall of the reflux condenser and the apparatus with cyclohexane, transfer the washings to the same separator. Separate the cyclohexane layer, and extract the water layer with two 3-ml of cyclohexane, filter the cyclohexane layer through a funnel laid with anhydrous sodium sulphate, combine the cyclohexane extract, transfer to a 20 ml volumetric flask, add accurately 1 ml of the internal standard solution, and dilute to volumn with cyclohexane, mix well. Inject accurately 1 μl of the solution into the column and measure. It contains not less than 0.20 mg of mentholum ($C_{10}H_{20}O$) per ml.

Action To clear *heat* and disperse the lung, and resolve phlegm and relieve cough.

Indications Coughing with expectoration of yellow phlegm, or difficult expectoration of phlegm, sore throat, constriction and distending pain in the chest due to invasion of the lung by *wind-heat* and internal retention of *phlegm-heat*; common *cold* and bronchitis with above symptoms.

Usage and dosage 10 ml, 3 times a day.

Storage Preserve in tightly closed containers, stored in a cool place.

Chuanbei Xueli Gao (川贝雪梨膏)

Chuanbei Xueli Concentrated Decoction

Ingredients Extractum Pyri Nivalis Liquidum 400 g; Bulbus Fritillariae Cirrhosae 50 g; Radix Ophiopogonis 100 g; Bulbus Lilii 50 g; Flos Farfarae 25 g.

Procedure Take fresh fruits of Pyrus nivalis, wash clean, squeeze to obtain juice, and decoct the residue with water for 2 hours and filter. Combine the filtrate and the above juice, stand for 24 hours, separate the supernatant and concentrate to a relative density of 1.30 (90℃) to obtain Extractum Pyri Nivalis Liquidum. Pulverize Bulbus Fritillariae Cirrhosae to coarse powder, carry out the method for percolation as described under liquid extracts and extracts (Appendix Ⅰ O), using 70% ethanol as the solvent, macerate for 48 hours and then percolate. Collect the percolate, recover ethanol. Decoct the residue and the other 3 ingredients with water twice, 4 hours for the first time and 3 hours for the second, combine the decoctions, filter, and stand for 12 hours. Separate the supernatant and concentrate to a quantity, add the above percolate of Bulbus Fritillariae Cirrhosae and Extractum Pyri Nivalis Liquidum, concentrate to a thin extract with relative density of 1.30 (90℃). To each 100 g of the thin extract, add invert sugar prepared from 400 g of sucrose, mix well and concentrate to the required density.

Description Brownish-yellow thick semifluid; taste, sweet.

Identification (1) To 20 ml add 20 ml of water and 5 ml of sodium carbonate TS, stir well, transfer the solution to a separator, extract by shaking with 20 ml of ether, separate the ether layer and evaporate to dryness, dissolve the residue in 2 ml of 1% hydrochloric acid and filter. Add 1-2 drops of potassium iodobismuthate TS to half of the filtrate in a test tube, a reddish brown precipitate is produced. Add 1-2 drops of mercuric potassium iodide TS to the other half of the filtrate in another test tube, a white turbidity is produced. (2) To 15 g add 15 ml of water, stir well, extract with two 25-ml quantities of *n*-butanol saturated with water, combine the *n*-butanol extracts and evaporate to dryness. Dissolve the residue in 10 ml of water, add 2 ml of hydrochloric acid, heat under reflux on a boiling water bath for 1 hour, cool. Extract with two 20-ml quantities of chloroform, evaporate the combined extracts to dryness. Dissolve the residue in 1 ml of chloroform as the test solution. To 1 g of Radix Ophiopogonis reference drug add 30 ml of water, decoct for 30 minutes, cool and filter, to the filtrate add 2 ml of hydrochloric acid, prepare a solution as the reference drug solution in the same manner. Carry out the method for thin layer chromatography (Appendix Ⅵ B), using silica gel G as the coating substance and a mixture of chloroform and acetone (4∶1) as the mobile phase. Apply separately 2-5 μl of each of the above two solutions to the plate. After developing and removal of the plate, dry in air. Spray with a 10% solution of sulfuric acid in ethanol, heat at 105℃ to the spots clear. The spots in the chromatogram obtained with the test solution correspond in position and colour to the spots in the chromatogram obtained with the reference drug solution.

Relative density Not less than 1.10 for a solution of 10 g in 20 ml of water (Appendix Ⅶ A).

Other requirements Complies with the general requirements for concentrated decoctions. (Appendix Ⅰ F).

Action To nourish *lung-yin* to stop cough, and promote fluid production to relieve sore throat.

Indications Cough, shortness of breath, dryness of the mouth and throat due to *lung-heat* in the *yin* deficiency syndrome.

Usage and dosage 15 g, twice a day.

Precaution Avoid pungent food.

Storage Preserve in tightly closed containers.

Chuanxiong Chatiao San (川芎茶调散)

Chuanxiong Chatiao Powder

Ingredients Rhizoma Chuanxiong 120 g; Radix Angelicae Dahuricae 60 g; Rhizoma seu Radix Notopterygii 60 g; Radix et Rhizoma Asari 30 g; Radix Saposhnikoviae 45 g; Herba Menthae 240 g; Herba Schizonepetae 120 g; Radix et Rhizoma Glycyrrhizae 60 g.

Procedure Pulverize the above eight ingredients to fine powder, sift and mix well.

Description A dark yellow powder; odour, aromatic; taste, pungent and slightly bitter.

Identification (1) Microscopical: Compound starch granules consisting of 8-12 components. Spiral or reticular-spiral vessels 14-50 μm in diameter, walls thickened. The cells of epicarp polygonal in surface view, with mucous walls, containing brown contents. Vittae containing brownish-

yellow secretion, about 100 μm in diameter. Vittae containing golden yellow secretion, about 30 μm in diameter. Fibre bundles surrounded by parenchymatous cells containing prisms of calcium oxalate, forming crystal fibres.
(2) To 3 g of the powder add 20 ml of petroleum ether (60-90℃), stopper tightly, shake frequently, macerate for 4 hours, filter, concentrate the filtrate to about 1 ml as the test solution. Prepare a solution with 0.3 g of Rhizoma Chuanxiong reference drug as the reference drug solution in the same manner. Carry out the method for thin layer chromatography (Appendix Ⅵ B), using silica gel G as the coating substance and a mixture of *n*-hexane and ethyl acetate (9 : 1) as the mobile phase. Apply separately 10 μl each of the above two solutions to the plate. After developing and removal of the plate, dry in air. Examine under ultraviolet light 365 nm. A major fluorescent spot in the chromatogram obtained with the test solution corresponds in position and colour to the spot in the chromatogram obtained with the reference drug solution.
(3) Prepare a solution with 0.5 g of Rhizoma seu Radix Notopterygii reference drug in the same manner described under Identification test (2) as the reference drug solution. Carry out the method for thin layer chromatography (Appendix Ⅵ B), using silica gel G as the coating substance and a mixture of *n*-hexane, benzene and ethyl acetate (2 : 1 : 1) as the mobile phase. Apply separately 10 μl of each of the reference drug solution and the test solution obtained under Identification test (2) to the plate. After developing and removal of the plate, dry in air. Spray with a 1% solution of vanillin in sulfuric acid and heat at 105℃ for about 5 minutes. A main spot in the chromatogram obtained with the test solution corresponds in position and colour to the spot in the chromatogram obtained with the reference drug solution.

Other requirements Complies with the general requirements for powders (Appendix Ⅰ B).

Action To disperse *wind* to kill pain.

Indications Headache, or aversion to cold, fever and stuffy nose due to affliction from external wind.

Usage and dosage 3-6 g, twice a day, taken with light tea after meals.

Precaution Be cautious about pregnant women.

Storage Preserve in well closed containers, protected from moisture.

Chuanxiong Chatiao Wan
(川芎茶调丸)

Chuanxiong Chatiao Pills

Ingredients Rhizoma Chuanxiong 120 g; Radix Angelicae Dahuricae 60 g; Rhizoma seu Radix Notopterygii 60 g; Radix et Rhizoma Asari 30 g; Radix Saposhnikoviae 45 g; Herba Schizonepetae 120 g; Herba Menthae 240 g; Radix et Rhizoma Glycyrrhizae 60 g.

Procedure Pulverize the above eight ingredients to fine powder, sift and mix well. Make pills with water and dry at a lower temperature.

Description Dark brown watered pills; odour, aromatic; taste, pungent, sweet and slightly bitter.

Identification (1) Microscopical: Compound starch granules consisting of 8-12 components. Spiral or reticular-spiral vessels 14-50 μm in diameter, walls thickened. Vittae containing brownish-yellow secretion, about 100 μm in diameter. Vittae containing golden yellow secretion, about 30 μm in diameter. Fibre bundles surrounded by parenchymatous cells containing prisms of calcium oxalate, forming crystal fibres.
(2) Pulverize 3 g of the pills to fine powder, add 20 ml of petroleum ether (60-90℃), stopper tightly, shake frequently, macerate for 4 hours, filter, evaporate the filtrate to 1 ml as the test solution. Prepare a solution with 0.3 g of Rhizoma Chuanxiong reference drug as the reference drug solution in the same manner. Carry out the method for thin layer chromatography (Appendix Ⅵ B), using silica gel G as the coating substance and a mixture of *n*-hexane and ethyl acetate (9 : 1) as the mobile phase. Apply separately to the plate 10 μl of each of the above two solutions. After developing and removal of the plate, dry it in air. Examine under ultraviolet light at 365 nm. The major fluorescent spots in the chromatogram obtained with the test solution correspond in position and colour to the fluorescent spots in the chromatogram obtained with the reference drug solution.
(3) Pulverize 10 g of the pills to fine powder, add about 150 ml of water, decoct for 30 minutes, allow to cool, centrifuge (1500 rpm) for 10 minutes. Adjust the pH value of the supernatant to 2-3 with hydrochloric acid, extract with two 20-ml quantities of chloroform. Combine the chloroform solutions and evaporate to dryness. Dissolve the residue in 1 ml of chloroform as the test solution. Prepare a solution with 1 g of Radix Angelicae Dahuricae reference drug as the reference drug solution in the same manner. Carry out the method for thin layer chromatography (Appendix Ⅵ B), using silica gel G containing sodium carboxymethylcellulose as the coating substance and a mixture of chloroform and methanol (20 : 1) as the mobile phase. Apply separately to the plate 10 μl of each of the above two solutions. After developing in a chamber pre-equilibrated with the mobile phase for 20 minutes and removal of the plate, dry in air. Examine under ultraviolet light at 365nm. The principal fluorescent spots in the chromatogram obtained with the test solution correspond in position and colour to the spots in the chromatogram obtained with the reference drug solution.

Other requirements Comply with the general requirements for pills (Appendix Ⅰ A).

Assay Carry out the method for high performance liguid chromatography (Appendix Ⅵ D).

Chromatographic system and system suitability Use octadecylsilane bonded silica gel as the stationary phase and a mixture of methanol and 2% acetic acid solution (20:80) as the mobile phase. As detector a spectrophotometer set at 323 nm. The number of theoretical plates of the column is not less than 8000, calculated with reference to the peak of ferulic acid.

Reference solution Dissolve a quantity of ferulic acid CRS, accurately weighed, in a mixture of 45% ethanol and glacial (20 : 1) to prepare a solution containing 10 μg per ml as the reference solution.

Test solution Weigh accurately 0.5 g of the powder, add accurately 20 ml of a mixture of 45% ethanol and glacial (20 : 1), weigh, heat under reflux for 1 hour, cool, and weigh. Replenish the lost weight with the above solution, mix thoroughly, centrifuge, use the supernatant liquid as the test solution.

Procedure Inject accurately 10 μl each of the reference solution and the test solution into the column and calculate the content.
It contains not less than 0.15 mg of a ferulic acid ($C_{10}H_{10}O_4$) per gram, referred to Rhizoma Chuanxiong and Radix et Rhizoma Notopterygii.

Action To disperse *wind* to kill pain.

Indications Headache, or aversion to cold, fever and stuffy nose due to affliction from external wind.

Usage and dosage 3-6 g, twice a day; taken with light tea after meals.

Precaution Be cautious about pregnant women.

Storage Preserve in well closed containers, protected from moisture.

Chunyang Zhengqi Wan
(纯阳正气丸)

Chunyang Zhengqi Pills

Ingredients Herba Pogostemonis 100 g; Rhizoma Pinelliae (processed) 100 g; Radix Inulae 100 g; Pericarpium Citri Reticulatae 100 g; Flos Caryophylli 100 g; Cortex Cinnamomi 100 g; Rhizoma Atractylodis 100 g; Rhizoma Atractylodis Macrocephalae 100 g; Poria 100 g; Cinnabaris 10 g; Saltpetre (refined) 10 g; Borax 6 g; Realgar 6 g; Lapis Micae Aureus (calcined) 4 g; Moschus 3 g; Borneolum Syntheticum 3 g.

Procedure Levigate separately Cinnabaris and Realgar to very fine powders. Pulverize all the other ingredients except Moschus, Borneolum Syntheticum and Saltpetre to fine powder. Triturate Moschus and Borneolum Syntheticum with the above powders, add the fine powder of Saltpetre, sift and mix well. Decoct 50 g of Pericarpium Zanthoxyli with water twice. Make pills with the decoction and the above powders, and dry in air.

Description Brownish-yellow to brownish-red watered pills; odour, aromatic; taste, bitter and pungent.

Identification (1) Microscopical: Irregular branched masses colourless, dissolved in chloral hydrate solution; hyphae colourless or pale brown, 4-6 μm in diameter. Raphides of calcium oxalate 32-144 μm long, abundant in mucilage cells or scattered. Needles of calcium oxalate minute, 10-32 μm long, irregularly filled in parenchymatous cells. Prisms of calcium oxalate abundant in parenchyma. Non-glandular hairs 1～6-celled, walls warty. Stone cells subrounded or subrectangular, walls thin on one side. Pollen grains triangular, about 16 μm in diameter. Irregular fine granules dark brownish-red, lustrous, edge black. Irregular pieces golden or orange, lustrous.

(2) Triturate 3 g of the pills to fine powder, add 30 ml of ether, macerate for 1 hour, filter and evaporate the ether. Dissolve the residue in 1 ml of ethanol as the test solution. Dissolve eugenol CRS in ethanol to produce a solution containing 10 μl per ml as the reference solution. Carry out the method for thin layer chromatography (Appendix Ⅵ B), using silica gel G as the coating substance and benzene as the mobile phase. Apply separately 1-2 μl of each of the above two solutions to the plate. After developing and removal of the plate, dry it in air. Spray with a 5% solution of vanillin in sulfuric acid and heat at 105℃ to the spots clear. The spot in the chromatogram obtained with the test solution corresponds in position and colour to the spot in the chromatogram obtained with the reference solution.

(3) Dissolve cinnamaldehyde CRS in ethanol to produce a solution containing 1 μl per ml as the reference solution. Carry out the method for thin layer chromatography (Appendix Ⅵ B), using silica gel G as the coating substance and a mixture of petroleum ether (60-90℃) and ethyl acetate (8∶1) as the mobile phase. Apply separately 2-5 μl of the test solution obtained under Identification test (2) and the above reference solution to the plate. After developing and removal of the plate, dry in air. Spray with solution of ethanolic dinitrophenylhydrazine TS. The spot in the chromatogram obtained with the test solution corresponds in position and colour to the spot in the chromatogram obtained with the reference solution.

Other requirements Comply with the general requirements for pills (Appendix Ⅰ A).

Action To warm the *middle-energizer* to disperse *cold*.

Indications Abdominal pain, vomiting, diarrhea, fullness in the chest, headache, aversion to cold, heaviness sensation of the body and limbs due to affliction from *cold-dampness* in summer.

Usage and dosage 1.5-3 g, 1-2 times a day.

Precaution Contraindicated for pregnant women.

Storage Preserve in tightly closed containers.

Cuitang Wan
(催汤丸)

Cuitang Pills

Cuitang pills are prescription used by Tibetan nationality.

Ingredients Extractum Inulae Racemosae 30 g; Radix Inulae Racemosae 20 g; Caulis Rubi (removed from bark and pith) 90 g; Caulis Tinosporae Sinensis (removed from bark) 50 g; Rhizoma Zingiber 20 g; Fructus Chebulae (removed from kerned) 36 g; Fructus Phyllanthi 40 g; Fructus Terminaliae Billericae (removed from kerned) 20 g; Radix Phlomis younghusbandii 60 g.

Procedure Pulverize the above ingredients, except Extractum Inulae Racemosae, to coarse powder, sift and mix well. Add Extractum Inulae Racemosae and water to make pills, and dry.

Description Greyish-yellow concentrated watered pills; externally rough, fragments of fibres distinct; odour, aromatic; taste, bitter, pungent and slightly salty.

Identification (1) Microscopical: Fibres mostly broken, walls thickened, with fissures, pits and pit-cannals indistinct. Sclerenchymatous cells subsquare or subrounded, walls unevenly thickened, lignified, striations faintly visible, containing prisms of calcium oxalate. Starch granules single, elongated-ovoid, broad-ovoid or irregular shaped, 25-32 μm in diameter, hila pointed, striations at relatively small end visible. Lignified cells subrectangular, pits obliquely fissured, containing clusters of calcium oxalate. Parenchymatous cells subrounded or subpolygonal, containing sand crystals, prisms and rounded-rosette crystals of calcium oxalate. Non-glandular hairs 1～2-celled, 7-20 μm in diameter, some containing yellow or brownish-yellow contents. Cork cells subrectangular or subpolygonal, walls slightly sinuous, containing yellow or yellowish-brown fine granular contents.

(2) To 4 g of the powdered pills, add 20 ml of water and macerate for 10 minutes. Add 20 ml of a mixture of *n*-hexane and ethyl acetate (1∶1), macerate for 3 hours, centrifuge, concentrate the supernatant liquid to about 1 ml and use the solution as the test solution. Prepare a solution with 0.5g of Radix Inulae Racemosae reference drug as the reference drug solution in the same manner. Carry out the method for thin layer chromatography (Appendix Ⅵ B), using silica gel G mixed with sodium carboxymethylcellulose

as the coating substance and a mixture of petroleum ether and ethyl acetate (4 : 1) as the mobile phase. Apply separately 2 μl each of the two solutions to the plate. After developing and removal of the plate, dry it in air, spray with a 5% solution of vanillin in sulfuric acid and heat to the spots clear. The two purple spots in the chromatogram obtained with the test solution correspond in position and colour to that in the chromatogram obtained with the reference drug solution.

(3) Ultrasonicate 6 g of the powdered pills with 20 ml of chloroform for 30 minutes, filter, and concentrate the filtrate to 1 ml as the test solution. Prepare a solution with 2 g of Caulis Rubi reference drug in the same manner as the reference drug solution. Carry out the method for thin layer chromatography (Appendix Ⅵ B), using silica gel G mixed with sodium carboxymethylcellulose as the coating substance and a mixture of petroleum ether (60-90℃) and ethyl acetate (8 : 2) as the mobile phase. Apply separately 10 μl of each of the two solutions to the plate. After developing and removal of the plate, dry in air and examine under ultraviolet light at 365 nm. The fluorescent spots in the chromatogram obtained with the test solution correspond in position and colour to the spots in the chromatogram obtained with the reference drug solution.

Water Not more than 8.0% (Appendix Ⅸ H).

Other requirements Comply with the general requirements for pills (Appendix Ⅰ A), no disintegration test is required.

Action To induce diaphoresis, reduce fever, relieve cough, and to arrest pain.

Indications Cold at the early stage with cough, headache, and joint aching; also used for prevention and treatment of influenza.

Usage and dosage 1-2 pills, 3 times a day, to be immersed in 400 ml of cold water for 1-2 hours, then decocted to a volume of about 300 ml, and taken while warm.

Precaution Be cautions about patients with renal dysfunction.

Specification 4 g per pill

Storage Preserve in tightly closed containers.

Dabuyin Wan
(大补阴丸)

Dabuyin Pills

Ingredients Radix Rehmanniae Praeparata 120 g; Rhizoma Anemarrhenae (stir-baked with salt) 80 g; Cortex Phellodendri (stir-baked with salt) 80 g; Carapax et Plastrum Testudinis (stir-baked with vinegar) 120 g; Medulla Spinalis Suis 160 g.

Procedure Decoct slightly Medulla Spinalis Suis with boiling water to eliminate the epidermis. Pulverize the other four ingredients to coarse powder, stir with the peeled Medulla Spinalis Suis, dry, pulverize to fine powder, sift and mix well. To each 100 g of the powder add 10-15 g of refined honey and a quantity of water to make water-honeyed pills and dry; or add 80-100 g of refined honey to make big honeyed pills.

Description Dark brownish-black water-honeyed pills; taste, bitter, slightly sweet with astringency.

Identification (1) Microscopical: Parenchyma greyish-brown to blackish-brown, cells mostly shrunken, and each containing a brown nucleus-like mass. Fibre bundles bright yellow, surrounded by parenchymatous cells containing prisms of calcium oxalate, forming crystal fibres, walls of crystal cells lignified and thickened. Irregular pieces greyish-yellow, with minute striations or pits on the surface. Needle crystals of calcium oxalate in bundles or scattered, 26-110 μm long.

(2) Triturate well 2 g of the big honeyed pills, add 10 ml of methanol, or pulverize 0.7 g of the water-honeyed pills to powder, add 5 ml of methanol, heat under reflux on a water bath for 15 minutes and filter. Make up for the filtrate or evaporate to 5 ml with methanol, use it as the test solution. Prepare a solution with 0.1 g of Cortex Phellodendri reference drug as the reference drug solution in the same manner. Dissolve berberine hydrochloride CRS in methanol to produce a solution containing 0.5 mg per ml as the reference solution. Carry out the method for thin layer chromatography (Appendix Ⅵ B), using silica gel G as the coating substance and a mixture of benzene, ethyl acetate, methanol, isopropanol, and concentrated ammonia TS (12 : 6 : 3 : 3 : 1) as the mobile phase. Apply separately 1 μl of each of the above three solutions to the plate. After developing in a chamber pre-equilibrated with ammonia vapour and removal of the plate, dry in air. Examine under ultraviolet light at 365 nm. The yellow fluorescent spots in the chromatogram obtained with the test solution correspond in position and colour to the spots in the chromatogram obtained with the reference drug solution; and a yellow fluorescent spot in the chromatogram obtained with the test solution corresponds in position and colour to the spot in the chromatogram obtaind with the reference solution.

Other requirments Comply with the general requirements for pills (Appendix Ⅰ A).

Action To nourish *yin* to reduce *fire*.

Indications Hectic fever, night sweating, coughing, hemoptysis, tinnitus, seminal emission due to *yin* deficiency resulting in hyperactivity of *fire*.

Usage and dosage 6 g, 2-3 times a day.

Strength 9 g per big honeyed pill

Storage Preserve in tightly closed containers.

Dahuang Qingwei Wan
(大黄清胃丸)

Dahuang Qingwei Pills

Ingredients Radix et Rhizoma Rhei 504 g; Caulis Akebiae 63 g; Semen Arecae 63 g; Radix Scutellariae 96 g; Arisaema cum Bile 42 g; Rhizoma seu Radix Notopterygii 42 g; Pulvis Talci 168 g; Radix Angelicae Dahuricae 42 g; Semen Pharbitidis (stir-baked) 42 g; Natrii Sulfas 63 g.

Procedure Pulverize the above ten ingredients to fine powder, sift and mix well. To each 100 g of the powder add 120-150 g of refined honey to make big honeyed pills.

Description Blackish-brown big honeyed pills; taste, bitter and pungent.

Identification (1) Microscopical: Clusters of calcium oxalate large, 60-140 μm in diameter. Bast fibres pale yellow, fusiform, walls thickened, and with fine pit-canals. Palisade cells of testa pale brown or brown, 48-80 μm long. Fragments of endosperm cells colourless, walls relatively thickened and with numerous large subrounded pits. Vittae containing brownish-yellow secretion, about 100 μm in diameter.

(2) To 3 g add 50 ml of water, mix well and filter. Rinse

the residue with water in portions to obtain a small quantity of white precipitate. The precipitate complies with the test for Identification described under Talc.
(3) The filtrate obtained under Identification test (2) yields the reactions characteristic of sodium and sulphate (Appendix Ⅳ).
(4) Pulverize 2 g of pills to powder, add 50 ml of methanol, ultrasonicate for 20 minutes, and filter, evaporate 5 ml of the filtrate to dryness, dissolve the residue in 10 ml of water, add 1 ml of hydrochloric acid, heat on a water bath for 30 minutes, and cool immediately. Extract with two 10-ml quantities of ether, combine the ether solution and evaporate to dryness, dissolve the residue in 1 ml of ethyl acetate as the test solution. Prepare a solution with 0.1 g of Radix et Rhizoma Rhei reference drug as the reference drug solution in the same manner. Carry out the method for thin layer chromatography (Appendix Ⅵ B), using silica gel H containing sodium carboxymethylcellulose as the coating substance and the upper layer of petroleum ether (30-60℃), ethyl formate and formic acid (15 : 5 : 1) as the mobile phase. Apply separately 2 μl of each of the above two solutions to the plate. After developing and removal of the plate, dry in air. Examine under ultraviolet light at 365 nm. Five orange fluorescent spots in the chromatogram obtained with the test solution correspond in position and colour to the spots in the chromatogram obtained with the reference drug solution. The spots saturated with ammonia vapour turns to red under sunlight.
(5) Triturate well 30 g of pills with 10 g of kieselguhr, mix well, add 50 ml of chloroform and 1 ml of concentrated ammonia TS, ultrasonicate for 30 minutes, filter, extract the filtrate with 20 ml of 2% hydrochloric acid solution with shaking, adjust pH value of the extracts with concentrated ammonia TS to pH 8-9, then extract with two 10-ml quantities of chloroform with shaking. Combine the chloroform solution and evaporate to dryness. Dissolve the residue in 1 ml of chloroform as the test solution. Prepare a solution with 1 g of Semen Arecae reference drug, 30 ml of chloroform and 0.5 ml of concentrated ammonia TS as the reference drug solution in the same manner. Carry out the method for thin layer chromatography (Appendix Ⅵ B), using silica gel G as the coating substance and a mixture of chloroform and methanol (9 : 1) as the mobile phase. Apply separately 30 μl of each of the above two solutions to the plate. After developing and removal of the plate, dry in air. Spray with dilute potassium iodobismuthate TS and dry in air. The spots in the chromatogram obtained with the test solution correspond in position and colour to the spots in the chromatogram obtained with the reference drug solution.

Other requirements Comply with the general requirements for pills (Appendix Ⅰ A).

Action To clear *heat* and relax bowels.

Indications Dry mouth and tongue, headache, dizziness and constipation due to hyperactivity of *stomach-fire*.

Usage and dosage 1 pill, twice a day.

Precaution Contraindicated for pregnant women.

Strength 9 g per pill

Storage Preserve in tightly closed containers.

Dahuang Zhechong Wan
(大黄䗪虫丸)

Dahuang Zhechong Pills

Ingredients Radix et Rhizoma Rhei (processed) 300 g; Eupolyphaga seu Steleophaga (stir-baked) 30 g; Hirudo (processed) 60 g; Tabanus (removed from wings and feet, stir-baked) 45 g; Holotrichia Diomphalia (stir-baked) 45 g; Resina Toxicodendri (calcined) 30 g; Semen Persicae 120 g; Semen Armeniacae Amarum (stir-baked) 120 g; Radix Scutellariae 60 g; Radix Rehmanniae 300 g; Radix Paeoniae Alba 120 g; Radix et Rhizoma Glycyrrhizae 90 g.

Procedure Pulverize the above twelve ingredients to fine powder, sift and mix well. To each 100 g of the powder add 30-45 g of refined honey and a quantity of water to make water-honeyed pills and dry; or add 80-100 g of refined honey to make small honeyed pills or big honeyed pills.

Description Black water-honeyed pills, small honeyed pills or big honeyed pills; odour, strong; taste, sweet and slightly bitter.

Identification (1) Microscopical: Clusters of calcium oxalate large, 60-140 μm in diameter. Clusters of calcium oxalate 18-32 μm in diameter, occuring in parenchymatous cells, usually arranged in rows, or several clusters in one cell. Parenchyma greyish-brown to blackish-brown, cells mostly shrunken, and each containing a brown nucleus-like mass. Bast fibres yellowish, fusiform, walls thickened, and with fine pit-canals. Fibre bundles surrounded by parenchymatous cells containing prisms of calcium oxalate, forming crystal fibres. Fragments of body walls yellow or brownish-red, with rounded hair pits, 8-24 μm in diameter, with setae varying in length. Fragments of body walls golden-yellow or yellowish brown, hair pits double-ringed, sometimes covered with warts or spinal protuberances. Fragments of body walls yellowish, the edges of alveolar in overlapped rings.
(2) Pulverize 2.5 g of the water-honeyed pills, or triturate well 6 g of the big honeyed pills or small honeyed pills with 3 g of kieselguhr, mix well, add 40 ml of ethanol, ultrasonicate for 30 minutes, and filter. Evaporate half volume of the filtrate to dryness. Dissolve the residue in 10 ml of water, add 1 ml of hydrochloric acid, heat on a water bath for 30 minutes and cool immediately. Extract with two 15-ml quantities of ether in shaking, combine the ether solution and evaporate to dryness. Dissolve the residue in 1 ml of ethyl acetate as the test solution. Prepare a solution with 50 mg of Radix et Rhizoma Rhei reference drug as the reference drug solution in the same manner. Carry out the method for thin layer chromatography (Appendix Ⅵ B), using silica gel H containing sodium carboxymethylcellulose as the coating substance and the upper layer of petroleum ether (30-60℃), ethyl formate and formic acid (15 : 5 : 1) as the mobile phase. Apply separately 1-2 μl of each of the above two solutions to the plate. After developing and removal of the plate, dry in air, and then expose to ammonia vapour. The orangish-red spots in the chromatogram obtained with the test solution correspond in position and colour to the spots in the chromatogram obtained with the reference drug solution.
(3) Evaporate the remainded filtrate obtained under Identification test (2) to dryness. Dissolve the residue in 40 ml of water, extract with three 20-ml quantities of *n*-butanol saturated with water, combine the *n*-butanol solutions. Wash with three 20-ml quantities of water saturated with *n*-butanol. Evaporate the *n*-butanol solution to dryness, and dissolve the residue in 1 ml of ethanol as the test solution. Dissolve baicalin CRS in methanol to produce a solution containing about 2 mg per ml as the reference solution. Carry out the method for thin layer chromatography (Appendix Ⅵ B), using silica gel G prepared with 4% sodium acetate solution containing sodium carboxymethylcellulose as the coating substance and a mixture of ethyl acetate, butanone, formic acid and water (5 : 3 : 1 : 1) as the mobile phase. Apply in strips separately 6 μl each of the

above two solutions to the plate. After developing and removal of the plate, dry in air. Spray with a 1% solution of ferric chloride in ethanol. The strip in the chromatogram obtained with the test solution corresponds in position and colour to the strip in the chromatogram obtained with the reference solution.

(4) Triturate well 3 g of small honeyed pills or big honeyed pills with 3 g kieseguhr, mix well, or pulverize 1.2 g of water-honeyed pills to powder, add 80 ml of dilute ethanol, ultrasonicate for 30 minutes, and filter. Evaporate the filtrate to dryness, dissolve the residue in 30 ml each of water and ether. Transfer the solution to a separater, allow to stand, discard ether solution. extract with three 30-ml quantities of *n*-butanol saturated with water. Combine the *n*-butanol extracts, recover *n*-butanol to dryness, dissolve the residue in 5 ml of water, and apply to a small column (10 mm in diameter, 12 cm in length) packed with macroporous resin D101, pre-elute with 50 ml of water, discard the eluates. Elute with 40% ethanol, and collect the eluates. Evaporate to dryness and dissolve the residue in 1 ml of acetone, use the supernatant as the test solution. Dissolve paeoniflorin CRS in ethanol to produce a solution containing 1 mg per ml as the reference solution. Carry out the method for thin layer chromatography (Appendix Ⅵ B), using silica gel G as the coating substance and a mixture of chloroform, ethyl acetate, methanol and concentrated ammonia TS (8 : 4 : 4 : 1) as the mobile phase. Apply separately 10 μl of the test solutions and 5 μl of the reference solutions to the plate. After developing and removal of the plate, dry in air. Spray with a 5% solution of vanillin in sulfuric acid and heat to the spot clear. The spots in the chromatogram obtained with the test solution correspond in position and colour to the spots in the chromatogram obtained with the reference solution.

Other requirements Comply with the general requirements for pills (Appendix Ⅰ A).

Assay Carry out the method for high performance liquid chromatography (Appendix Ⅵ D).

Chromatographic system and system suitability Use octadecylsilane bonded silica gel as the stationary phase and a mixture of methanol, water, and phosphoric acid (85 : 15 : 0.05) as the mobile phase. As detector a spectrophotometer set at 289 nm. The number of theoretical plates of the column is not less than 4000, calculated with reference to the peak of emodin.

Preparation of reference solution Weigh accurately 10 mg of emodin CRS, in a 50 ml volumetric flask, add a quantity of methanol to dissove and dilute to volumn, mix well. Measure accurately 2 ml, in a 50 ml volumetric flask, dilute to volumn with methanol, mix well, used as the reference solution, containing 8 μg of emodin per ml.

Preparation of test solution Pulverize 1 g of water-honeyed pills to fine powder, accurately weighed, or cut a quantity of small honeyed pills or big honeyed pills obtained under the weight variation test into pieces, triturate well with an equal quantity of kieseguhr, mix well. Weigh accurately 4 g of the powder, to a stopper conical flask, add accurately 25 ml of methanol, weigh, heat under reflux on a water bath for 1 hour, and stand to cool, weigh again and compensate the loss of the weight with methanol, mix well, and filter. Measure accurately 5 ml of the successive filtrate in a conical flask, expel the solvent, add 20 ml of 2.5 mol/L sulfuric acid solution, ultrasonicate for 10 minutes, and heat under reflux for 1 hour, and cool immediately, transfer to a separator. Extract with three 25-ml quantities of ether, combine the ether extracts, wash with 15 ml of water, discard the washings, pass through a funnel packed with anhydrous sodium sulfate. Wash the filter and the container with a little quantity of ether, combine the washings with the filtrate evaporate to dryness at a low temperature. Dissolve the residue with a quantity of methanol in a 25 ml volumetric flask, dilute with methanol to volume, and mix well and use the successive filtrate as the test solution.

Procedure Inject accurately 10 μl each of the reference solution and the test solution into the column and calculate the content. It contains not less than 0.40 mg of emodin per 1 g of water-honeyed pills or 0.26 mg of that per 1 g of small honeyed pills or 0.80 mg of that per pill of big honeyed pills, referred to Radix et Rhizoma Rhei.

Action To promote blood circulation to eliminate blood stasis, and stimulate menstrual flow and disintegrate masses.

Indications Abdominal masses and amenorrhea due to retention of blood with manifestations of abdominal masses, scaly dry skin, darkish complexion, tidal fever and emaciation or amenorrhea.

Usage and dosage 3 g of water-honeyed pills, 3-6 pills of small honeyed pills or 1-2 big honeyed pills, 1-2 times a day.

Precaution Contraindicated for pregnant women; withdrawal of it when there is skin allergy.

Strength 3 g per big honeyed pill

Storage Preserve in tightly closed containers.

Daige San
(黛蛤散)

Daige Powder

Ingredients Indigo Naturalis 30 g; Concha Meretricis seu Cyclinae 300 g.

Procedure Pulverize the above two ingredients to fine powder, sift and mix well.

Description A greyish-blue powder; taste, weak.

Identification (1) To the powder, add in drops dilute hydrochloric acid, bubble is produced. Pass the gas into calcium hydroxide TS, a white precipitate is produced.

(2) Stir well the powder with 10 ml of water and 10 ml of dilute hydrochloric acid and filter. To 1 ml of the filtrate, add 2 drops of methyl red IS, neutralize with ammonia TS, then add in drops hydrochloric acid to exact acidity, add 1-2 drops of ammonium oxalate TS, a white precipitate is produced. Separate the precipitate, it does not dissolve in acetic acid, but dissolve in hydrochloric acid.

(3) Shake 2 g of the powder in 5 ml of chloroform for several minutes, filter and use the filtrate as the test solution. Dissolve indigo CRS and indirubin CRS in chloroform to produce a mixture containing 1 mg of each per ml as the reference solution. Carry out the method for chromatography (Appendix Ⅵ B), using silica gel G as the coating substance and a mixture of benzene, chloroform, and acetone (5 : 4 : 1) as the mobile phase. Apply separately 5 μl of each of the above two solutions to the plate. After developing and removal of the plate, dry in air. The spots in the chromatogram obtained with the test solution correspond in position and colour to the spots in the chromatogram obtained with the reference solution.

Other requirements Comply with the general requirements for powders (Appendix Ⅰ B).

Action To clear the liver and lung, and send *qi* downward and release restlessness.

Indications Dizziness, tinnitus, coughing with expectoration of copious, yellow and thick phlegm, epistaxis, hemoptysis, discomfort in the throat, thirst and restlessness due to invasion of the lung by *liver-fire*.

Usage and dosage 6 g, 1 time a day, used in decoction of prescription.

Storage Preserve in well closed containers, protected from moisture.

Daiwenjiu Gao (代温灸膏)

Daiwenjiu Plaster

Ingredients Fructus Capsici; Cortex Cinnamomi; Rhizoma Zingiberis Recens; Oleum Cinnamomi.

Procedure Pulverize Fructus Capsici, Cortex Cinnamomi and Rhizoma Zingiberis Recens to coarse powders. Macerate with ethanol three times, 24 hours for the first time, 72 hours for the second time and 48 hours for the third time, filter. Combine the filtrates and concentrate to a thick extract with relative density of 1.30-1.35 (70℃), add the plaster base made from rubber, zinc oxide, rosin etc, mix well with Oleum Cinnamomi to produce adhesive matter. Spread the adhesive matter on the tape, cut into sections, cover with liner, and cut into small pieces.

Description Orange yellow pieces of rubber plaster; odour, aromatic.

Identification (1) Macerate overnight 6 pieces, removed from the coating and cut into strips with width of 1 cm, in 50 ml of ethanol in a stopper conical flask, and filter. Evaporate the filtrate at 60-70℃ on a water bath to dryness, and dissolve the residue in 2 ml of ethanol as the test solution. Dissolve cinnamic aldehyde CRS in ethanol to prepare a solution containing 1 μl per ml as the reference solution. Carry out the method of thin layer chromatography (Appendix Ⅵ B), using silica gel G as the coating substance and a mixture of petroleum ether (60-90℃) and ethyl acetate (17 : 3) as the mobile phase. Apply separately 2 μl each of the above two solutions to the plate. After developing and removal of the plate, dry in air. Spray with dinitrophenylhydrazine TS. The spot in the chromatogram obtained with the test solution corresponds in position and colour to the spot in the chromatogram obtained with the reference solution.

(2) To 6 pieces, removed from the coating, add 20 ml of chloroform, dissolve the ointment base by stirring, add 30 ml dehydrated ethanol, solidify the ointment base by stirring, allow to stand for 10 minutes, filter. Repeat the above operation with chloroform and dehydrated ethanol, combine the filtrate and evaporate to dryness. Dissolve the residue in 2 ml of dehydrated ethanol, centrifuge. Apply the supernatant to the column of C18 (300 mg). Elute with 5 ml water and 5 ml 30% methanol in turn, discard the eluates. Then Elute with 5 ml 70% methanol, collect the eluates as the test solution. Dissolve capsaicin CRS in methanol to produce a solution containing 30 μg per ml as the reference solution. Carry out the method for high performance liquid chromatography (Appendix Ⅵ D), Use octadecylsilane bonded silica gel as the stationary phase and a mixture of acetonitrile and 0.1% phosphoric acid (45 : 55) as the mobile phase. Maintain the temperature of the column at 35℃. As detector a spectrophotometer set at 270 nm. The number of theoretical plates of the column is not less than 3000, calculated with reference to the peak of capsaicin. Inject accurately 10 μl of each of the two above solutions into the column. The retention time of the peak in the chromatograph obtained with the test solution corresponds to that in the obtained with the reference solution.

Plaster content Not less than 1.7 g per 100 cm^2. (Appendix Ⅰ I, method 1), using ether as the solvent.

Other requirements Comply with the general requirements for adhesive plasters of cataplasms.

Determination of ethanol-soluble extractives Measure the area of two pieces, removed from the cover liner, cut into pieces, to a stopper conical flask, add 50 ml of dehydrated ethanol, stopper tightly, and macerate for 16 hours, filter, wash the container and residue with three 10-ml of dehydrated ethanol, combine the washings with the filtrate in a evaporating dish, dried to constant weight, evaporate to dryness on a water bath at 60-70℃, dry the residue in a desiccator for 3 hours, weigh accurately, and calculate. It contains not less than 0.20 g per 100 square centimeter.

Action To warm meridians, and disperse *cold* to kill pain.

Indications Impeded flow of *yang-qi* due to *wind-dampness* that blocks meridians with manifestations of cold and pain of the back, lower back and joints of limbs; cold and painful stomach and abdomen due to impairment of the spleen and stomach by cold, diarrhea due to cold in a deficiency syndrome; chronic rheumatic arthritis and chronic gastroenteritis with above symptoms.

Usage and dosage Apply it to the acupuncture points according to the condition.

Storage Preserve in tightly closed containers, stored in a cool place.

Danggui Longhui Wan (当归龙荟丸)

Danggui Longhui Pills

Ingredients Radix Angelicae Sinensis (stir-baked with wine) 100 g; Radix Gentianae (stir-baked with wine) 100 g; Aloe 50 g; Indigo Naturalis 50 g; Fructus Gardeniae 100 g; Rhizoma Coptidis (stir-baked with wine) 100 g; Radix Scutellariae (stir-baked with wine) 100 g; Cortex Phellodendri Chinensis (stir-baked with salt) 100 g; Radix et Rhizoma Rhei (stir-baked with wine) 50 g; Radix Aucklandiae 25 g; Moschus 5 g.

Procedure Pulverize the above ingredients, except Moschus, to fine powder. Triturate Moschus with the above fine powder, sift and mix well. Make pills with water and dry under a lower temperature.

Description Yellowish-green to dark brown watered pills; odour, slight; taste, bitter.

Identification (1) Microscopical: Parenchymatous cells fusiform, walls slightly thickened and with very fine oblique crisscross striations. Fibre bundles bright yellow, with slightly thickened walls and distinct pits. Fibre bundles bright yellow, surrounded by cells containing prisms of calcium oxalate, forming crystal fibre, crystal cells with lignified and thickened walls. Bast fibres pale yellow, fusiform, walls thickened and with fine pit-canals. Stone cells of testa yellow or pale brown, mostly broken, when whole, elongated-polygonal, rectangular or irregular, walls thickened and with large rounded pits, lumina brownish-red. Clusters of calcium oxalate large, 60-140 μm in diameter. Irregular pieces or granules blue.

(2) Pulverize 5 g of the pills to powder, add 20 ml of ether, macerate for 4 hours, shaking frequently, and filter. Wash the filtrate with 5 ml of 1% solution of sodium hydroxide, discard the aqueous layer, evaporate the ether layer to about 1 ml as the test solution. Prepare a solution with 1 g of Radix Angelicae Sinensis reference drug and 10 ml of ether as the reference drug solution in the same manner. Carry out the method for thin layer chromatography (Appendix Ⅵ B), using silica gel G containing sodium carboxymethylcellulose as the coating substance and a mixture of *n*-hexane and ethyl acetate (9 : 1) as the mobile phase. Apply separately 5 μl of the test solution and 3 μl of the reference drug solution to the plate. After developing and removal of the plate, dry in air. Examine under ultraviolet light at 365 nm. The fluorescent spots in the chromatogram obtained with the test solution correspond in position and colour to the spots in the chromatogram obtained with the reference drug solution.

(3) Heat under reflux 2 g of the pills, ground well, in 20 ml of chloroform for 20 minutes, and filter. Evaporate the filtrate to about 1 ml as the test solution. Dissolve indirubin CRS in chloroform to produce a solution containing 1 mg per ml as the reference solution. Carry out the method for thin layer chromatography (Appendix Ⅵ B), using silica gel G containing sodium carboxymethylcellulose as the coating substance and a mixture of benzene and acetone (4 : 1) as the mobile phase. Apply separately 10 μl of the test solution and 5 μl of the reference solution to the plate. After developing and removal of the plate, dry in air. The red spot in the chromatogram obtained with the test solution corresponds in position and colour to the spot in the chromatogram obtained with the reference solution.

(4) To 1 g of Radix Aucklandiae reference drug, add 10 ml of ether, macerate for 4 hours, shake frequently, and filter. Evaporate the filtrate to about 1 ml as the reference drug solution. Carry out the method for thin layer chromatography (Appendix Ⅵ B), using silica gel G containing sodium carboxymethylcellulose as the coating substance and a mixture of *n*-hexane and ethyl acetate (9 : 1) as the mobile phase. Apply separately 5 μl of the test solution obtained under Identification test (2) and 3 μl of the reference drug solution to the plate. After developing and removal of the plate, dry in air. Spray with a 1% solution of vanillin in sulfuric acid and heat to the spots clear. The violet-blue spots in the chromatogram obtained with the test solution correspond in position and colour to the spots in the chromatogram obtained with the reference drug solution.

Other requirements Comply with the general requirements for pills (Appendix Ⅰ A).

Action To purge *fire* and relax bowels.

Indications Restlessness, dizziness, tinnitus, poor hearing or deafness, hypochondriac pain, distending pain in the stomach and constipation due to exuberant *fire* in the liver and gallbladder.

Usage and dosage 6 g, twice a day.

Precaution Contraindicated for pregnant women.

Storage Preserve in tightly closed containers.

Danggui Yangxue Wan (当归养血丸)

Danggui Yangxue Pills

Ingredients Radix Angelicae Sinensis 150 g; Radix Paeoniae Alba (stir-baked) 150 g; Radix Rehmanniae 400 g; Radix Astragali Praeparata 150 g; Colla Corii Asini 150 g; Cortex Moutan 100 g; Rhizoma Cyperi (processed) 150 g; Poria 150 g; Cortex Eucommiae (stir-baked) 200 g; Rhizoma Atractylodis Macrocephalae (stir-baked) 200 g.

Procedure Pulverize the above 10 ingredients, except Colla Corii Asini, to fine powder, sift and mix well. Dissolve Colla Corii Asini with a quantity of water and mix well with the refined honey. To each 100 g of the powder add a quantity of the above mixtured liquid containing 35-45g of refined honey to make pills and dry.

Description Dark brown watered pills; taste, sweet and slightly bitter.

Identification (1) Microscopical: Masses of gelatinized starch granules colourless. Irregularly branched masses colourless, dissolved in chloral hydrate TS; hyphae colourless or pale brown, 4-6 μm in diameter. Needle crystals of calcium oxalate fine, 10-32 μm long, irregularly filling in parenchymatous cells. Parenchymatous cells fusiform, walls slightly thickened, with very fine oblique crisscross striations. Parenchyma greyish-brown to blackish-brown, cells usually shrunken, and each containing a brown nucleus-like mass. Fibres in bundles or scattered, walls thickened, with longitudinal fissures, the two ends broken to broom-like or relatively truncate. Rubber threads strip-shaped or twisted into masses, surface granular. Secretory cells subrounded, containing pale yellowish-brown to redish-brown secretion, the surrounding cells radiately arranged.

(2) To 5 g of the pills, ground well, add 15 ml of petroleum ether (60-90℃), ultrasonicate for 15 minutes, and filter. Evaporate the filtrate to dryness, and dissolve the residue in 1 ml of dehydrated ethanol as the test solution. Prepare a solution with 1 g of Radix Angelicae Sinensis reference drug as the reference drug solution in the same manner. Carry out the method for thin layer chromatography (Appendix Ⅵ B), using silica gel G as the coating substance and a mixture of *n*-hexane-ethyl acetate (9 : 1) as the mobile phase. Apply separately 5 μl of each of the above two solutions to the plate. After developing and removal of the plate, dry in air. Examine under ultraviolet light at 365 nm. The fluorescent spots in the chromatogram obtained with the test solution correspond in position and colour to the spots in the chromatogram obtained with the reference drug solution.

(3) Moist 10 g of the pills, ground well, with 10 ml of ether, add 40 ml of petroleum ether (30-60℃), ultrasonicate for 30 minutes, and filter. Evaporate the filtrate to dryness, and dissolve the residue in 2 ml of acetone as the test solution. Dissolve paeonol CRS in acetone to produce a solution containing 1 mg per ml as the reference solution. Carry out the method for thin layer chromatography (Appendix Ⅵ B), using silica gel G as the coating substance and benzene as the mobile phase. Apply separately 5 μl of each of the above two solutions to the plate. After developing and removal of the plate, dry in air. Spray with a 5% solution of ferric chloride in ethanol acidified with hydrochloric acid. The spot in the chromatogram obtained with the test solution corresponds in position and colour to the spot in the chromatogram obtained with the reference solution.

Other requirements Comply with the general requirements for pills (Appendix Ⅰ A).

Action To replenish *qi* and nourish blood, and regulate menstruation.

Indications Menstrual disorders due to a deficiency of both *qi* and blood, with manifestations of preceded menstrual cycle, menorrhagia or oligomenorrhea, menostaxis and lassitude.

Usage and dosage 9 g, 3 times a day.

Storage Preserve in tightly closed containers.

Danle Jiaonang
(胆乐胶囊)

Danle Capsules

Ingredients Zhudanzhisuan 75 g; Pericarpium Citri Reticulatae 75 g; Fructus Crataegi 600 g; Radix Curcumae 240 g; Herba Glechomae 600 g.

Procedure Decoct Fructus Crataegi, Radix Curcumae and Herba Glechomae with water twice, 2 hours for the first and 2 hours for the second time; filter, combine the filtrate, concentrate the filtrate in vacuum to a thick extract; dry and pulverize it to fine powder. Pulverize Pericarpium Citri Reticulata and Zhudanzhisuan to fine powder, combine this powder with the above powder, and mix thoroughly, pack to make 1000 capsules.

Description Capsules containing brownish-yellow to brown powder; taste, bitter.

Identification (1) Heat under reflux 3 g of the contents, with 25 ml of absolute ethanol for 30 minutes, cool and filter, use the filtrate as the test solution. Dissolve a quantity of hyodeoxycholic acid CRS in ethanol to produce a solution containing 1 mg per ml as the reference solution. Carry out the method for thin layer chromatography (Appendix Ⅵ B), using silica gel G mixed with sodium carboxymethylcellulose as the coating substance and a mixture of chloroform, ethyl acetate, and glacial acetic acid (10 : 10 : 1) as the mobile phase. Apply separately 10 μl of each of the test solution and the reference solution to the plate. After developing and removal of the plate, dry in air. Spray with 10% sulfuric acid in ethanol and heat at 105℃ to the spot clear. Examine under ultraviolet light at 365 nm. The fluorescent spot in the chromatogram obtained with the test solution corresponds in position and colour to the spot in the chromatogram obtained with the reference solution.
(2) Prepare a solution of 0.75 g of Pericarpium Citri Reticulatae reference drug in the same manner as the reference drug solution as described in the test solution preparation under Identification (1). Dissolve a quantity of hesperidin CRS in methanol to produce a saturated solution as the reference solution. Carry out the method for thin layer chromatography (Appendix Ⅵ B), using silica gel G mixed with sodium carboxyme thylcellulose as the coating substance and a mixture of ethyl acetate, methanol, and water (100 : 17 : 13) as the mobile phase. Apply separately 10 μl of each of the above two kinds of solutions and the test solution obtained under Identification (1) to the plate. After developing and removal of the plate, dry in air. Spray with 10% aluminium trichloride in ethanol, and examine under ultraviolet light at 365 nm. The fluorescent spots in the chromatogram obtained with the test solution correspond in position and colour to the spots obtained with the reference solution and reference drug solution.

Other requirements Comply with the general requirements for capsules (Appendix Ⅰ L).

Assay Carry out the method for high performance liquid chromatography (Appendix Ⅵ D).

Chromatographic system and system suitability Use octadecylsilance bonded silica gel as the stationary phase and a mixture of acetonitrile and 0.2% solution of phosphoric acid (19 : 81) as the mobile phase. As detector a spectrophotometer set at 284 nm. The number of theoretical plates of the column is not less than 3000, calculated with the reference to the peak of hesperidin.

Reference solution Dissolve a quantity of hesperidin CRS, accurately weighed, in methanol to produce a solution containing 35 μg per ml.

Test solution Weigh accurately 0.3 g of the contents, obtained under the test of weight variation, place to a Soxhlet's extractor, add a quantity of methanol, heat under reflux on a water bath for 6 hours; transfer the extract to a 100 ml volumetric flask, dilute with methanol to volume and mix well. Filter, and use the successive filtrate as the test solution.

Procedure Inject accurately 5 μl of each of the reference solution and the test solution into the column, and calculate the content.
It contains not less than 2.6 mg of hesperidin ($C_{28}H_{34}O_{15}$) per capsule, referred to pericarpium Citri Reticulatae.

Action To regulate *qi* to kill pain, and promote bile flow and remove gallstones.

Indications Hypochondriac pain and gallbladder distention due to stagnation of *liver-qi* with manifestations of distending pain in the hypochondriac region, loss of appitite and yellow urine; chronic cholecystitis and cholelithiasis with above symptoms.

Usage and dosage 4 capsules, 3 times a day.

Strength 0.3 g per capsule

Storage Preserve in tightly closed containers.

Attached:

Acidum Bilis Susis
(猪胆汁酸)

Pig Gall Acidic Extract

Pig Gall Extract is an extraction made from the bile of *Sus scrofa domestica* Brisson (Fam. Suidae).

Procedure Filter pig bile, adjust the pH value of the filtrate to above 10 with sodium hydroxide; boiling the filtrate for 2-3 hours to react for saponification. Filter, adjust the filtrate to 1 with hydrochloric acid, wash the deposit with water until the pH value to above 3.5; dry the deposit below 80℃ and obtain the extract.

Description Brownish-yellow or brown powder; taste, bitter, easily moistened.

Solubility: Freely soluble in ethanol, practically insoluble in water.

Identification Heat under reflux 0.5 g of the extract, with 25 ml of ethanol for 30 minutes; filter, use the filtrate as the test solution. Dissolve a quantity of hyodeoxycholic acid CRS in ethanol to produce a solution containing 1 mg per ml as the reference solution. Carry out the method for thin layer chromatography (Appendix Ⅵ B), using silica gel G mixed with sodium carboxy methylcellulose as the coating substance and a mixture of cyclohexane, ethyl acetate, methanol and acetic acid (2 : 16 : 1 : 1) as the mobile phase. Apply separately 10 μl of each of the test solution and the reference solution to the plate. After developing and removal of the plate, dry in air. Spray with 10% phosphomolybdic acid in ethanol and heat at 105℃ to the spot clear. The fluorescent spot in the chromatogram obtained with the test solution corresponds in position and colour to the spot in the chromatogram obtained with the reference solution.

pH value 1% water solution, pH 3.5-5.0 (Appendix Ⅶ G).

Loss on drying Not more than 5.0 per cent (Appendix Ⅸ G).

Total ash Not more than 5.0 per cent (Appendix Ⅸ K).

Assay Heat under reflux 0.5 g of the extract, weighed accurately,

with 20 ml of ethanol for 30 minutes; filter, wash the residue with 10 ml of ethanol, combine the filtrate and the washing, evaporate to dryness. Add 30 ml of 15% solution of sodium hydroxide and 1 ml of ethanol to the residue, heat under reflux for 6 hours, cool; add 30 ml of water, mix thoroughly, and filter, transfer the filtrate to a separating funnel. Wash the vessel and the residue with 20 ml of hot water, and combine the washing to the filtrate. Acidify this solution with dilute sulfuric acid TS, cool; extract with successive quantities of 50, 50, 30 and 30 ml of ether, combine ether extracts, and wash with two 20-ml quantities of water. Filter, and wash the filter vessel with 10 ml of ether, combine the washing and the filtrate; transfer the combining ether to a conical flask, previously dried to constant weight. Recover ether to dryness, dry to constant weight at 105℃, weigh accurately and calculate.
It contains not less 55.0 per cent of zhudanzhisuan.

Danning Pian
(胆宁片)

Danning Tablets

Ingredients Radix et Rhizoma Rhei; Radix et Rhizoma Polygoni Cuspidati; Pericarpium Citri Reticulatae Viride; Rhizoma Imperatae; Pericarpium Citri Reticulatae; Radix Curcumae; Fructus Crataegi.

Procedure Pulverize Radix et Rhizoma Rhei to fine powder. Distil volatile oil from Pericarpium Citri Reticulatae. Heat under reflux the other 5 ingredients with 70% ethanol twice, 1 hour for each time; recover the ethanol and concentrate to an appropriate amount, dry in vacuum, pulverize. Add the fine powder of Radix et Rhizoma Rhei, the volatile oil and a quantity of excipient, mix thoroughly; make granules, compress into tablets, and coat with film.

Description Film coated tablets with brown core; taste, sweet and bitter.

Identification (1) Triturate 3 tablets, removed the coat, to fine powder; add 10 ml of methanol, ultrasonicate for 15 minutes, filter, use the filtrate as the test solution. Prepare a solution of 0.5 g of Radix et Rhizoma Polygoni Cuspidati reference drug in the same manner as the reference drug solution. Carry out the method for thin layer chromatography (Appendix Ⅵ B), using silica gel G as the coating substance and a mixture of chloroform and methanol (4 : 1) as the mobile phase. Apply separately 4 μl of each of the test solution and the reference drug solution to the plate. After developing and removal of the plate, dry in air. The spot in the chromatogram obtained with the test solution corresponds in position and colour to the spot in the chromatogram obtained with the reference drug solution; the spot turn to red on exposure to ammonia vapour.
(2) Evaporate 2 ml of the test solution, obtained under Identification (1), to dryness; add 4 ml of ethyl acetate and ultrasonicate for 15 minutes, filter, use the filtrate as the test solution. Prepare a solution of 1 g of Fructus Crataegi reference drug in the same manner as the reference drug solution. Dissolve a quantity of ursolic acid in methanol to produce a solution containing 1 mg per ml as the reference solution. Carry out the method for thin layer chromatography (Appendix Ⅵ B), using silica gel G as the coating substance and a mixture of toluene, ethyl acetate and formic acid (20 : 4 : 0.5) as the mobile phase. Apply separately 8 μl of the test solution and 2 μl of each of the reference drug solution and reference solution to the plate. After developing and removal of the plate, dry in air. Spray with a solution of sulfuric acid in ethanol (1→10), and heat at 105℃ to spots clear. Examine in daylight, the spot in the chromatogram obtained with the test solution corresponds in position and colour to the spot in the chromatogram obtained with the reference drug solution and the reference solution. Examine under ultraviolet light at 365 nm, the fluorescent spot in the chromatogram obtained with the test solution corresponds in position and colour to the spot in the chromatogram obtained with the reference drug solution and reference solution.
(3) Dissolve a quantity of hesperidin CRS in methanol to produce a saturated solution as the reference solution. Carry out the method for thin layer chromatography (Appendix Ⅵ B), using silica gel G as the coating substance and a mixture of ethyl acetate, methanol and water (100 : 17 : 13) as the mobile phase. Apply separately 4 μl of the test solution, obtained under Identification (1), and 10 μl of the reference solution to the plate. After developing and removal of the plate, dry in air. Spray with 1% aluminium trichloride in ethanol and examine under ultraviolet light at 365 nm. The fluorescent spot in the chromatogram obtained with the test solution corresponds in position and colour to the spot in the chromatogram obtained with the reference drug solution.

Other requirements Comply with the general requirements for tablets (Appendix Ⅰ D).

Assay Carry out the method for high performance liquid chromatography (Appendix Ⅵ D).

Chromatographic system and system suitability Use octadecylsilance bonded silica gel as the stationary phase and a mixture of methanol and 0.1% solution of phosphoric acid (80 : 20) as the mobile phase. As detector a spectrophotometer set at 254 nm. The number of theoretical plates of the column is not less than 3000, calculated with the reference to the peak of emodin.

Reference solution Dissolve a quantity of emodin CRS and chrysophanol CRS, accurately weighed, in methanol to produce a mixture containing 12 μg of emodin and 1.6 μg of chrysophanol per ml.

Test solution Weigh accurately 10 tablets, removed the coat, triturate to fine powder; weigh accurately 0.35 g of the powder, place to a round-bottomed flask; add 10 ml 30% solution of sulphuric acid, and heat under reflux with successive 30 ml, 20 ml, 20 ml of chloroform for 2 hours, 30 minutes and 30 minutes respectively. Combine the chloroform solution and wash with a quantity of water, transfer the chloroform solution to a 100 ml of volumetric flask, dilute with chloroform to the volume, mix thoroughly. Measure accurately 3 ml of the chloroform solution, evaporate to dryness, dissolve the residue in methanol and transfer to a 10 ml of volumetric flask, dilute with methanol to the volume, mix thoroughly and filter, use the successive filtrate as the test solution.

Procedure Inject accurately 10 μl of each of the reference solution and the test solution into the column, and calculate the content.
It contains not less than 3.2 mg of the summation of emodin ($C_{15}H_{10}O_5$) and chrysophanol ($C_{15}H_{10}O_4$) per tablet, referred to Radix et Rhizoma Rhei and Radix et Rhizoma Polygoni Cuspidati.

Action To soothe the liver to promote bile flow, clear *heat* and release constipation.

Indications Dull pain in the right upper abdomen, distesion of *stomach* and abdomen after meals, poor appetite, belching and constipation due to stagnation of *liver-qi* and failure of *damp-heat* to be cleared; chronic cholecystitis with above symptoms.

Usage and dosage 5 tablets, 3 times a day.

Precaution Reduce the dosage when over three times of bowels movement occur.

Strength 0.36 g per tablet

Storage Preserve in tightly closed containers.

Daochi Wan
(导赤丸)

Daochi Pills

Ingredients Fructus Forsythiae 120 g; Rhizoma Coptidis 60 g; Fructus Gardeniae (stir-baked with ginger) 120 g; Caulis Akebiae 60 g; Radix Scrophulariae 120 g; Radix Trichosanthis 120 g; Radix Paeoniae Rubra 60 g; Radix et Rhizoma Rhei 60 g; Radix Scutellariae 120 g; Talcum 120 g.

Procedure Pulverize the above ten ingredients to fine powder, sift and mix well. To each 100 g of the powder add 120-140 g of refined honey to make big honeyed pills.

Description Blackish-brown big honeyed pills; taste, sweet and bitter.

Identification (1) Microscopical: Compound starch granules composed of 2-14 component, mostly a big helmet-like component combined with several small ones. Stone cells yellowish-brown or colourless, subrectangular, subrounded or irregular, up to about 94 μm in diameter, striation well-defined. Stone cells of testa yellow or pale brown, mostly broken, when whole, elongated-polygonal, rectangular or irregular, with thickened walls and large rounded pits, lumina brownish-red. Fibre bundles bright yellow, with slightly thickened walls and distinct pits. phloem fibres pale yellow, fusiform, with thickened walls and fine pit-canals. Fibres of endocarp short-fusiform, with the lower and upper fibre layers alternated crisscrossly. Clusters of calcium oxalate large, 60-140 μm in diameter.

(2) Triturate well 3 g of the pills, cut into pieces, with 1 g of kieselguhr, macerate in 10 ml of methanol for 1 hour, constantly shake, filter and concentrate the filtrate to 1 ml as the test solution. Prepare a solution with 50 mg of Rhizoma Coptidis reference drug as the reference drug solution in the same manner. Dissolve berberine hydrochloride CRS in methanol to produce a solution containing 0.5 mg per ml as the reference solution. Carry out the method for thin layer chromatography (Appendix Ⅵ B), using silica gel G as the coating substance and a mixture of benzene, ethyl acetate, methanol, isopropanol and concentrated ammonia TS (12 : 6 : 3 : 3 : 1) as the mobile phase. Apply separately to the plate 1-2 μl of each of the above three solutions. After developing in a chamber pre-equilibrated with ammonia vapour and removal of the plate, dry in air, and examine under ultraviolet light at 365 nm. The yellow fluorescent spots in the chromatogram obtained with the test solution correspond in position and colour to the spots in the chromatogram obtained with the reference drug solution; A yellow fluorescent spot in the chromatogram obtained with the test solution corresponds in position and colour to the spot in the chromatogram obtained with the reference solution.

(3) Triturate well 3 g of the pills, cut into pieces, with 1 g of kieselguhr, macerate in 10 ml of methanol in a stopper conical flask for 1 hour, with frequently shaking, filter. Evaporate 5 ml of the filtrate to dryness. Dissolve the residue in 5 ml of water, add 0.5 ml of hydrochloric acid, heat on a water bath for 30 minutes, cool immediately, extract with 15 ml of ether in two portions. Combine the ether extracts and evaporate to dryness. Dissolve the residue in 1 ml of chloroform as the test solution. Prepare a solution with 0.1 g of Radix et Rhizoma Rhei reference drug in the same manner as the reference drug solution. Carry out the method for thin layer chromatography (Appendix Ⅵ B), using silica gel G as the coating substance and the upper layer of a mixture of petroleum ether (30-60℃), ethyl formate and formic acid (15 : 5 : 1) as the mobile phase. Apply separately to the plate 10 μl of each of the above two solutions. After developing and removal of the plate, dry in air, and examine under ultraviolet light at 365 nm. The fluorescent spots in the chromatogram obtained with the test solution correspond in position and colour to the spots in the chromatogram obtained with the reference drug solution. Expose the plate to ammonia vapour and examine in daylight, the spots turn red.

Other requirements Comply with the general requirements for pills (Appendix Ⅰ A).

Assay Cut the pills obtained under the weight variation test into pieces, mix well. To 1 g of the powder, weighed accurately, in a 100 ml volumetric flask, add 5 ml of water, stand to dissolve. Add about 80 ml of a mixture of hydrochloric acid and methanol (1 : 100), heat at 60℃ on a water bath for 15 minutes, and ultrasonicate (power 250 W, frequency 33 kHz) for 15 minutes, cool. Dilute with the mixture of hydrochloric acid and methanol (1 : 100) to volume, shake well and filter. Measure accurately 5 ml of the successive filtrate and apply to a neutral aluminium oxide column (100-200 mesh, 3 g, 0.9 cm in diameter), elute with 25 ml of ethanol, collect the eluate and evaporate to dryness. Dissolve the residue in a quantity of methanol and transfer to a 5 ml volumetric flask, dilute with methanol to volume, shake well as the test solution. Dissolve berberine hydrochloric CRS, accurately weighed, in methanol to produce a solution containing 0.025 mg per ml as the reference solution. Carry out the method for thin layer chromatography (Appendix Ⅵ B), using silica gel G as the coating substance and a mixture of benzene, ethyl acetate, methanol, isopropanol and water (20 : 10 : 5 : 5 : 1) as the mobile phase. Apply accurately 4 μl of the test solution, 2 μl and 4 μl of the reference solution to the plate. After developing in a chamber pre-equilibrated with ammonia vapour and removal of the plate, dry in air. Carry out the method for thin layer chromatography (Appendix Ⅵ B, thin layer chromatographic scanning method), scan at the wavelength λ_{ex}=365 nm with fluorescent mode, measure the integrated value and calculate the content.

It contains not less than 3.0 mg of berberine hydrochloride ($C_{20}H_{18}ClNO_4$) per pill, referred to Radix Coptidis.

Action To clear *heat* and purge *fire*, and induce urination and relax bowels.

Indications Sores on the mouth and tongue, sore throat, feverish sensation and restlessness in the chest, concentrated urine and constipation due to abundant *fire* in the interior.

Usage and dosage 1 pill, twice a day; appropriate reduction of the dosage for children under 1 year old.

Strength 3 g per pill

Storage Preserve in tightly closed containers.

Dashanzha Wan
(大山楂丸)

Dashanzha Pills

Ingredients Fructus Crataegi 1000 g; Massa Medicata Fermentata (stir-baked with bran) 150 g; Fructus Hordei Germinatus (stir-baked) 150 g.

Procedure Pulverize the above three ingredients to fine powder, sift and mix well. To 600 g of sucrose add 270 ml of water and 600 g of refined honey, mix well, decoct gently to a relative density of 1.38 (70 ℃), filter, mix well with the above powder to make big honeyed pills.

Description Brownish-red or brown big honeyed pills; taste, sour and sweet.

Identification (1) Microscopical: Stone cells of pericarp pale purplish-red, red or yellowish-brown, subrounded or polygonal, up to 125 μm in diameter. Epidermal cell longitudinally arranged, with one long cell connected to two short cells, the long cells with thickened, sinuous and lignified walls.

(2) To 9 g of pills, cut into pieces, add 40 ml of ethanol, heat under reflux for 10 minutes, filter and evaporate the filtrate to dryness. Dissolve the residue in 10 ml of water on heating, extract with 15 ml of *n*-butanol with shaking. Separate the *n*-butanol solution and evaporate to dryness, dissolve the residue in 5 ml of methanol and filter. To 1 ml of the filtrate add a small quantity of magnesium powder and 2-3 drops of hydrochloric acid, heat for 4-5 minutes, an orange-red colour is produced.

(3) Use the filtrate obtained under Identification test (2) as the test solution. Dissolve ursolic acid CRS in methanol to produce a solution containing 1 mg per ml as the reference solution. Carry out the method for thin layer chromatography (Appendix Ⅵ B), using silica gel G as the coating substance and a mixture of chloroform and acetone (9 : 1) as the mobile phase. Apply separately to the plate 2 μl each of the above two solutions. After developing and removal of the plate, dry in air. Spray with a 10% solution of sulfuric acid in ethanol and heat at 105 ℃ for several minutes. The purplish-red spot in the chromatogram obtained with the test solution corresponds in position and colour to the spot in the chromatogram obtained with the reference solution.

Other requirements Comply with the general requirements for pills (Appendix Ⅰ A).

Assay Weigh accurately 3 g of the pills, obtained in test of weight variation and cut into pieces, add 30 ml of water, allow to disintegrate thoroughly on a water bath at 60℃, add 2 g of the kieselguhr, stir well and filter. Wash the residue with 30 ml of water, dry at 100℃. Transfer the residue together with the filter paper to a Soxhelt's extractor and heat under reflux with an appropriate quantity of ether for 4 hours. Recover the ether and macerate the residue with two 5-ml quantities of petroleum ether (30-60℃) for about two minutes each time. Decant the petroleum ether, dissolve the residue in a mixture of dehydrated ethanol and chloroform (3 : 2) by warming. Transfer accurately the solution to a 5 ml volume flask, dilute to volume, mix well, use the solution as the test solution. Dissolve ursolic acid CRS, weighed accurately, in dehydrated ethanol to produce a solution containing 0.5 mg per ml as the reference solution. Carry out the method for thin layer chromatography (Appendix Ⅵ B), using silica gel G as the coating substance and a mixture of cyclohexane, chloroform, ethyl acetate and formic acid (20 : 5 : 8 : 0.1) as the mobile phase. Apply accurately to the plate 5 μl of the test solution, 4 μl and 8 μl of the reference solutions. After developing and removal of the plate, dry it in air. Spray with a 10% solution of sulfuric acid in ethanol and heat at 110℃ to the spots clear. Cover with a same size glass to the plate and fix with adhesive tape. Carry out the method of thin layer chromatography (Appendix Ⅵ B, thin layer chromatographic scanning method), scan at the wavelengh: $\lambda s = 535$ nm, $\lambda R = 650$ nm. Measure the integration value of absorbence of the test solution and the reference solution and calculate the content.

It contains not less than 7.0 mg of ursolic acid ($C_{30}H_{48}O_3$) per pill, referred to Fructus Crataegi.

Action To promote digestion and whet appetite.

Indications Poor appetite, indigestion, and fullness in the stomach and abdomen due to retention of food in the stomach.

Usage and dosage 1-2 pills, 1-3 times a day; appropriate reduction of the dosage for children.

Strength 9 g per pill

Storage Preserve in tightly closed containers.

Desheng Wan
(得生丸)

Desheng Pills

Ingredients Herba Leonuri 600 g; Radix Angelicae Sinensis 200 g; Radix Paeoniae Alba 200 g; Radix Bupleuri 100 g; Radix Aucklandiae 50 g; Rhizoma Chuanxiong 50 g.

Procedure Pulverize the above six ingredients to fine powder, sift and mix well. To each 100 g of the powder add 190-210 g of refined honey to make big honeyed pills.

Description Blackish-brown big honeyed pills; odour, slightly aromatic; taste, bitter.

Identification (1) Microscopical: Parenchymatous cells fusiform, walls slightly thickened, with very fine oblique crisscross striations. Clusters of calcium oxalate 18-32 μm in diameter, occurring in parenchymatous cells, usually arranged in rows or several clusters in one cell. Non-glandular hairs 1-3-celled, slightly curved with warty walls. Vittae containing pale yellow or yellowish-brown strips of secretion, 8-25 μm in diameter.

(2) Macerate warmly 9 g of the pills, cut into pieces and ground well with 6 g of kieselguhr, in 60 ml of ethanol for 1 hour, shake constantly. Filter and evaporate the filtrate to dryness. Dissolve the residue in 15 ml of water, extract with two 20-ml quantities of *n*-butanol saturated with water. Combine the *n*-butanol extract, wash with two 10-ml quantities of water, discard the water solutions and evaporate the *n*-butanol solution to about 1 ml. Add a quantity of neutral aluminium oxide stir well and dry on a water bath. Apply to a neutral aluminium oxide column (200-300 mesh, 1 g, 1-1.5 cm in internal diameter), elute with 30 ml of the mixture of ethyl acetate and methanol (1 : 1). Collect the eluate and evaporate to dryness. Dissolve the residue in 1 ml of ethanol as the test solution. Dissolve paeoniflorin CRS in ethanol to produce a solution containing 1 mg per ml as the reference solution. Carry out the method for thin layer chromatography (Appendix Ⅵ B), using silica gel G as the coating substance and a mixture of chloroform, ethyl acetate, methanol and formic acid (40 : 5 : 10 : 0.2) as the mobile phase. Apply separately to the plate 5 μl of each of the above two solutions. After developing and removal of the plate, dry in air. Spray with a 5% solution of vanillin in sulfuric acid, heat to the spots clear. The spot in the chromatogram obtained with the test solution corresponds in position and colour to the spot in the chromatogram obtained with the reference solution.

Other requirements Comply with the general requirements for pills (Appendix Ⅰ A).

Action To nourish blood and resolve stasis, and soothe the liver to regulate menstruation.

Indications Irregular menstruation, dysmenorrhea due to stagnation of *qi* and blood, with manifestations of scanty menstrual blood with clots, delayed or advanced menstrual cycle, abdominal pain during menstruation or abdominal masses.

Usage and dosage 1 pill, twice a day.

Precaution Contraindicated for pregnant women.

Strength 9 g per pill

Storage Preserve in tightly closed containers.

Dieda Huoxue San
(跌打活血散)

Dieda Huoxue Powder

Ingredients Flos Carthami 120 g; Radix Angelicae Sinensis 60 g; Sanguis Draxonis 14 g; Radix et Rhizoma Notoginseng 20 g; Rhizoma Drynariae (stir-baked) 60 g; Radix Dipsaci 60 g; Olibanum (processed) 60 g; Myrrha (processed) 60 g; Catechu 40 g; Radix et Rhizoma Rhei 40 g; Borneolum Syntheticum 4 g; Eupolyphaga seu Steleophaga 40 g.

Procedure Grind Borneolum Syntheticum to fine powder. Pulverize Radix Notoginsen to fine powder. Pulverize the other ten ingredients to fine powder. Mix the fine powder of Borneolum Syntheticum with the above powders, sift and mix well.

Description A reddish-brown powder; odour, characteristic aromatic of Borneolum; taste, slightly bitter.

Identification (1) Microscopical: Irregular fragments pale yellow, translucent, with oil droplets diffusing out while melted on heating and exhibiting prisms of calcium oxalate. Irregular masses colourless or pale yellow, surface and surrounding diffusing out numerous fine granules, soluble on long standing. Irregular fragments sanguineous, surrounded by bright yellow liquid, changing to red gradually. Pollen grains globular or elliptical, about 60 μm in diameter, extine spiny with 3 germinal apertures. Clusters of calcium oxalate up to about 45 μm in diameter, occurring in pale brownish-yellow and shrunken parenchymatous cells, often arranged in rows. Clusters of calcium oxalate large, 60-140 μm in diameter. Fragments of body walls yellow or brownish-red, with rounded hair pits, 8-24 μm in diameter, sometimes with setae varying in length.

(2) To 5 g of the powder, add 10 ml of dehydrated ethanol, heat under reflux for 30 minutes, filter, evaporate the filtrate to dryness. Dissolve the residue in a small quantity of glacial acetic acid, add 1-2 drops of sulfuric acid, a red colour is produced initially and turns gradually to purple and brown.

(3) To 3 g of the powder, add 25 ml of methanol, ultrasonicate for 20 minutes, filter and evaporate the filtrate to dryness. Dissolve the residue in 50 ml of water, then add 5 ml of hydrochloric acid, heat on a water bath for 30 minutes, cool immediately, and transfer to a separator. Extract with two 20-ml quantities of ether, combine the ether solutions and evaporate to dryness. Dissolve the residue in 2 ml of ethyl acetate as the test solution. Prepare a solution with 0.05 g of Radix et Rhizoma Rhei reference drug as the reference drug solution in the same manner. Macerate 2 g of Radix Angelicae Sinensis reference drug in 15 ml of ether for 30 minutes, shake constantly, filter, evaporate the filtrate to dryness and dissolve the residue in 1 ml of ethyl acetate as the reference drug solution. Carry out the method for thin layer chromatography (Appendix Ⅵ B), using silica gel G as the coating substance and the upper layer of petroleum ether (30-60℃), ethyl formate and formic acid (15 : 5 : 1) as the mobile phase. Apply separately to the plate 2 μl of each of the above three solutions. After developing and removal of the plate, dry in air. Examine under ultraviolet light at 365 nm. The two blue fluorescent spots in the chromatogram obtained with the test solution correspond in position and colour to the spots in the chromatogram obtained with Radix Angelicae Sinensis reference drug solution. The two to three orange fluorescent spots in the chromatogram obtained with the test solution correspond in position and colour to the spots in the chromatogram obtained with Radix et Rhizoma Rhei reference drug solution. Expose the plate to ammonia vapour and examine in sunlight, the five red spots in the chromatogram obtained with the test solution correspond in position and colour to the spots in the chromatogram obtained with the Radix et Rhizoma Rhei reference drug solution.

Other requirements Comply with the general requirements for powders (Appendix Ⅰ B).

Action To relax muscles and tendons to promote blood circulation, and dissipate blood stasis to kill pain.

Indications Traumatic injury with bruise and pain or lumbar sprain.

Usage and dosage 3 g, twice a day, taken with warm boiled water or yellow rice wine; for external use, appropriate quantity to be mixed with yellow rice wine or vinegar and applied topically.

Precaution It should not be applied to an open wound; it is forbidden to prescribe to pregnant women.

Storage Preserve in tightly closed containers.

Dieda Wan
(跌打丸)

Dieda Pills

Ingredients Radix et Rhizoma Notoginseng 64 g; Radix Angelicae Sinensis 32 g; Radix Paeoniae Alba 48 g; Radix Paeoniae Rubra 64 g; Semen Persicae 32 g; Flos Carthami 48 g; Sanguis Draxonis 48 g; Herba Siphonostegiae 32 g; Rhizoma Drynariae (scalded) 32 g; Radix Dipsaci 320 g; Lignum Sappan 48 g; Cortex Moutan 32 g; Olibanum (processed) 48 g; Myrrha (processed) 48 g; Rhizoma Curcumae Longae 24 g; Rhizoma Sparganii (processed with vinegar) 48 g; Radix Saposhnikoviae 32 g; Semen Cucumis 32 g; Fructus Aurantii Immaturus (stir-baked) 32 g; Radix Platycodi 32 g; Radix et Rhizoma Glycyrrhizae 48 g; Caulis Akebiae 32 g; Pyritum (calcined) 32 g; Eupolyphaga seu Steleophaga 32 g.

Procedure Pulverize the above twenty four ingredients to fine powder, sift, mix well. To each 100 g of the powder add 100-120 g of refined honey to make big honeyed pills.

Description Blackish-brown to black big honeyed pills; odour, slightly stinking; taste, bitter.

Identificaton (1) Microscopical: Pollen grains globular or elliptical, about up to 60 μm in diameter, extine spiny, with three germinal apertures. Fibre bundles orange-yellow, surrounded by parenchymatous cells containing prisms of calcium oxalate, forming crystal fibres. Fibre bundles pale yellow, surrounded by parenchymatous cells containing prisms of calcium oxalate, forming crystal fibres. Stone cells orange-yellow, shell-like, walls relatively thickened, pits distinct at the broader side. Stone cells of testa golden-

yellow, subrectangular, walls thickened, deeply sinuous, with distinct striations, closely parqueted. Prisms of calcium oxalate aboundant in parenchyma. Vittae containing golden-yellow secretion, 30 μm in diameter. Anastomosing laticiferous tubes 14-25 μm in diameter, containing pale yellow granules. Non-grandular hairs pale yellow to pale brown, 1-2 celled. Fragments of body walls yellow or brownish-red, with rounded hair pits, 8-24 μm in diameter, with setae, varying in length.

(2) Heat under reflux 5 g, cut into pieces, with 50 ml of methanol for 1 hour, cool and filter. Evaporate the filtrate to dryness, and dissolve the residue in 20 ml of water. Extract with three 30-ml quantities of *n*-butanol saturated with water, combine the *n*-butanol extracts, wash with two-20 ml quantities of ammonia TS and wash with water saturated with *n*-butanol. Evaporate the *n*-butanol extracts to dryness, and dissolve the residue in 1 ml of methanol as the test solution. Dissolve notoginsenoside R1 CRS and ginsenoside Rg1 CRS in methanol to produce a solution containing 1 mg per ml as the reference solution. Carry out the method for thin layer chromatography (Appendix Ⅵ B), using silica gel G as the coating substance and a mixture of chloroform, ethyl acetate, methanol and water (15 : 40 : 22 : 10) (allow to stand below 10℃) as the mobile phase. Apply separately 2 μl of the test solutions and 1 μl of the reference solutions to the plate. After developing and removal of the plate, dry in air. Spray with a 10% solution of sulfuric acid in ethanol and heat at 105℃ to the spots clear. Examine in daylight, the spots in the chromatogram obtained with the test solution correspond in position and colour to the spots in the chromatogram obtained with reference solution. Examine under ultraviolet light at 365 nm, the fluoresent spots in the chromatogram obtained with the test solution correspond in position and colour to the spots in the chromatogram obtained with reference solution.

(3) Heat under reflux 5 g, cut into pieces, with 20 ml of ethyl acetate for 1 hour, cool and filter. Evaporate the filtrate to dryness, and dissolve the residue in 1 ml of ethyl acetate as the test solution. Prepare a solution of 1 g of Radix Angelicae Sinensis reference drug in the same manner as the reference drug solution. Carry out the method for thin layer chromatography (Appendix Ⅵ B), using silica gel G as the coating substance and a mixture of cyclohexane and ethyl acetate (9 : 1) as the mobile phase. Apply separately to the plate 2 μl of the test solutions and 1 μl of the reference solutions. After developing and removal of the plate, dry in air. Examine under ultraviolet light at 365 nm, the fluoresent spots in the chromatogram obtained with the test solution correspond in position and colour to the spots in the chromatogram obtained with reference drug solution.

Other requirements Comply with the general requirements for pills (Appendix Ⅰ A).

Assay Carry out the method for high performance liquid chromatography (Appendix Ⅵ D).

Chromatographic system and system suitability Use octadecylsilane bonded silica gel as the stationary phase and a mixture of acetonitrile and 0.05 mol/L sodium dihydrogen phosphate (49 : 51) as the mobile phase. As detector a spectrophotometer set at 440 nm. The number of theoretical plates of the column is not less than 4000, calculated with reference to the peak of dracorhodin.

Reference solution Dissolve a quantity of dracorhodin perchlorate CRS, accurately weighed, in 3% solution of phosphoric acid in methanol to produce a solution containing 20 μg per ml as the reference solution (per ml is equivalent to 14.52 μg of dracorhodin).

Test solution Weigh accurately 2 g of the pills, obtained in test of weight variation and cut into pieces, add accurately 25 ml of 3% solution of phosphoric acid in methanol, heat under reflux for 30 minutes, cool, weigh again and replenish the loss of the weight with 3% solution of phosphoric acid in methanol, mix well, and centrifuge, use the supernatant as test solution.

Procedure Inject accurately 10 μl of each of the reference solution and the test solution into the column and measure. It contains not less than 0.30 mg of drcorhodin ($C_{17}H_{14}O_3$) per pill, referred to Sanguis Draxonis.

Action To promote blood circulation to dissipate blood stasis and reduce swelling to kill pain.

Indications Traumatic injury, broken tendons and fracture, bruise with swelling and pain or lumbar sprain.

Usage and dosage 1 pill, twice a day.

Precaution Contraindicated for pregnant women.

Strength 3 g per pill

Storage Preserve in tightly closed containers.

Dieda Zhentong Gao (跌打镇痛膏)

Dieda Zhentong Plaster

Ingredients Eupolyphaga seu Steleophaga 48 g; Radix Aconiti Kusnezoffii 48 g; Semen Strychni (stir-baked) 48 g; Radix et Rhizoma Rhei 48 g; Ligni Dalbergiae Odoriferae 48 g; Radix Zanthoxyli 48 g; Radix Scutellariae 48 g; Cortex Phellodendri Chinensis 48 g; Rhizoma Polygoni Cuspidati 15 g; Borneolum Syntheticum 24 g; Oleum Menthae Dementholatum 30 g; Camphor 60 g; Methyl Salicylate 60 g; Mentholum 30 g.

Procedure Grind Borneolium Syntheticum to fine powder. Pulverize Eupolyphaga seu Steleophaga, Semen Strychni, Radix Aconiti Kusnezoffii, Radix et Rhizoma, Rhei, Ligni Dalbergiae Odoriferae, Radix Zanthoxyli, Radix Scutellariae, Cortex Phellodenclri Chinensis and Rhizoma Polygoni Cuspidati to fine powder. Weigh the powders according to the formulated dose, add 0.7-0.9 fold by weight of the plaster base composed of rubber and rosin to make adhesive masses. Spread the masses on the tape, cut into pieces, covered with gauze as liner and cut into small pieces of suitable size.

Description Brownish-black pieces of adhesive tape plaster, the back of the plaster turn yellow slightly after long storage; odor, aromatic.

Identification (1) Using the remains obtained under the test of Plaster content for microscopic observation: Fibre bundles bright yellow, surrounded by parechymatous cells containing prisms of calium oxalate, forming crystal fibres, walls of crystal cells lignified and thickened. Purplish-red fibres and crystal fibres in bundles or scattered, with thickened and lignified walls. Phloem fibres pale yellow, fusiform, wall thickened, with fine pit-canals. Clusters of calcium oxalate large, 60-140 μm in diameter. Unicellular nonglandular hairs fibre-like, mostly broken, swelled at base and stone cell-like, and lignified. Fragments of the body walls yellow or brownish-red, with rounded seta pits, 8-24 μm in diameter, setae varying in length visible.

(2) Transfer the liquid obtained under the test of Volatile oil to a funnel, wash the volatile oil determination with 10 ml of ethyl acetate, and combine the washings to funnel, separate the ethyl acetate solution as the test solution. Dissolve mentholum CRS, borneolum syntheticum CRS, methyl

salicylate CRS and camphor CRS in dehydrate ethanol respectively to produce a mixture containing 8 mg, 7 mg, 17 mg and 17 mg respectively per ml as the reference solution. Carry out the method for gas chromatogram (Appendix Ⅵ E), using a column of 2 meters length packed with 10% polyethylene glycol (PEG-20 M) as the stationary phase; maintain the column temperature at 150℃. Inject 1 μl of each of the test solution and the reference solution separately into the column. The retention times of the peaks obtained with the test solution and the reference solution correspond to each other.

Strychnine Take 5 pieces, remove the cover, and cut into pieces. Macerate in 60 ml of 1 mol/L hydrochloric acid in a stopper conical flask overnight, ultrasonicate for 20 minutes, and filter, transfer the filtrate to a funnel and adjust to pH 9-10 with strong ammonia TS and extract with ether three times (30, 20 and 20 ml). Combine the ether solutions, dehydrate with anhydrous sodium sulfate, filter, and evaporate the filtrate to dryness. Dissolve the residue in chloroform, transfer the solution to a 2 ml volumetric flask, dilute with chloroform to volume, mix well and use as the test solution. Dissolve strychnine CRS, weighed accurately, in chloroform to produce a solution containing 6 mg per ml as the reference solution. Carry out the method for thin layer chromatograph (Appendix Ⅵ B), using silica gel G as the coating substance and a mixture of toluene, acetone, ethanol and strong ammonia TS (4 : 5 : 0.6 : 0.4) as the mobile phrase. Apply separately 10 μl of each of the above two solutions to the plate. After developing and removal of the plate, dry in air, spray with a dilute potassium iodobismuthate TS. The spot in the chromatogram obtained with the test solution is not stronger than the spot in the chromatogram obtained with the reference solution.

Aconitine Dissolve aconitine CRS, weighed accurately, in chloroform to produce a solution containing 0.4 mg per ml as the reference solution. Carry out the method for thin layer chromatograph (Appendix Ⅵ B), using silica gel G prepared with 2% sodium hydroxide solution as the coating substance and a mixture of ether and methanol (60 : 1) as the mobile phrase. Apply separately to the plate 10 μl of each of the reference solutions and the test solution obtained under the test of Other requirements for strychnine. After developing and removal of the plate, dry in air, expose to iodine vapour to the spots clear. The spot in the chromatogram obtained with the test solution is not stronger than the spot in the chromatogram obtained with the reference solution or not visible.

Plaster content Carry out the determination method of plaster content for adhesive plasters (Appendix Ⅰ D), using 2 pieces and ether as the solvent, not less than 3.0 g per 100 cm^2.

Others requirements Comply with the general requirements for plaster (Appendix Ⅰ D).

Volatile Oil Take 2 pieces, cut 50 cm^2 from each piece, remove the cover, and cut into pieces. Carry out the the method for determination of volatile oil (Appendix Ⅹ D, first method), it contains 0.3 ml of volatile oil per 100 m^2.

Action To promote blood circulation to kill pain, dissipate blood stasis to reduce swelling, and expel *wind* to drain *dampness*.

Indications Traumatic injury with bruise, acute or chronic sprain, persistent pain of the lower back and legs and rheumatic arthralgia.

Usage and dosage External use, topically.

Precaution Be cautious about pregnant women and patients with skin sensitivity.

Strength (1) 10 cm×7 cm (2) 10 cm×400 cm

Storage Preserve in tightly closed containers.

Dingkun Dan
(定坤丹)

Dingkun Pills

Dingkun Pills are big honeyed pills prepared from Radix et Rhizoma Ginseng Rubra; Cornu Cervi Pantotrichum; Stigma Croci; Caulis Spatholobi; Radix et Rhizoma Notoginseng; Radix Paeoniae Alba; Radix Rehmanniae (steamed); Radix Angelicae Sinensis; Rhizoma Atractylodis Macrocephalae; Fructus Lycii; Radix Scutellariae; Rhizoma Cyperi; Fructus Leonuri; Rhizoma Chuanxiong; Cornu Cervi Degelatinatum; Colla Corii Asini; Rhizoma Corydalis and other ingredients.

Description Blackish-brown big honeyed pills; odour, slight; taste, sweet, then bitter and astringent.

Identification (1) Microscopical: Stone cells of testa irregularly polygonal in surface view, walls thickened, sinuous and distinctly striated. Needle crystals fine, 10-32 μm long, irregularly filling in parenchymatous cells. Bast fibres yellow, fusiform, walls thickened, with fine pit canals. Fibre bundles brownish-yellow, surrounded by parenchymatous cells containing prisms of calcium oxalate, forming crystal fibres.

(2) Triturate well 5 g of the pills with 5 g kieseguhr, mix well, add 60 ml of ether, ultrasonicate for 10 minutes, and filter. Evaporate the filtrate to dryness, and dissolve the residue in 0.5 ml of ethyl acetate as the test solution. Prepare a solution of 0.5 g each of Radix Angelicae Sinensis reference drug and Rhizoma Chuanxiong reference drug, add separately 20 ml of ether, in the same manner as the reference drug solutions. Carry out the method for thin layer chromatography (Appendix Ⅵ B), using silica gel G as the coating substance and a mixture of *n*-hexane and ethyl acetate (9 : 1) as the mobile phase. Apply separately 10 μl of the test solutions and 3 μl of the reference drug solutions to the plate. After developing and removal of the plate, dry in air. Examine under ultraviolet light at 365 nm, the fluoresent spots in the chromatogram obtained with the test solution correspond in position and colour to the spots in the chromatogram obtained with reference drug solutions.

(3) Prepare a solution of 1 g of Radix Angelicae Sinensis reference drug and Rhizoma Chuanxiong reference drug in the same manner discribed under Assay test as the reference drug solution. Dissolve ginsenoside Rd1 CRS and ginsenoside Re CRS and ginsenoside Rg1 CRS and notoginsenoside R1 CRS in methanol to prepare a mixture solution containing 0.5 mg of each per ml as the reference solution. Carry out the method for thin layer chromatography (Appendix Ⅵ B), using silica gel G as the coating substance and a mixture of chloroform, methanol and water (13 : 7 : 2)(allow to stand below 10℃) as the mobile phase. Apply separately 10 μl of the test solutions obtained under Assay test and 1 μl of the reference solutions to the plate. After developing and removal of the plate, dry in air. Spray with a 10% solution of sulfuric acid in ethanol and heat at 105℃ to the spots clear. Examine in daylight, the spots in the chromatogram obtained with the test solution correspond in position and colour to the spots in the chromatogram obtained with the reference solution and the reference drug solution. Examine under ultraviolet light at 365 nm, the fluoresent spots in the

chromatogram obtained with the test solution correspond in position and colour to the spots in the chromatogram obtained with the reference solution and the reference drug solution.

(4) Triturate well 20 g of the pills with 20 g kieseguhr, mix well, add 60 ml of ethanol, ultrasonicate for 30 minutes, and filter. Evaporate the filtrate to dryness, dissolve the residue in 30 ml of water, and extract with three 20-ml quantity of *n*-butanol saturated with water. Combine the *n*-butanol extracts, concentrate to 1 ml, add a quantity of aluminium oxide, stir well, and apply to a small column (1.0 cm in diameter) packed with neutral aluminium oxide (100 mesh, 4 g). Elute with 50 ml of methanol, and collect the eluates. Evaporate to dryness and dissolve the residue in 1 ml of ethanol as the test solution. To 0.5 g of Radix Paeoniae Alba reference drug, add 20 ml of ethanol, ultrasonicate for 15 minutes, and filter. Evaporate to dryness, and dissolve the residue in 1 ml of ethanol as the reference drug solution. Dissolve paeoniflorin CRS in ethanol to prepare a solution containing 1 mg per ml as the reference solution. Carry out the method for thin layer chromatography (Appendix Ⅵ B), using silica gel G as the coating substance and a mixture of chloroform and methanol (5 : 1) as the mobile phase. Apply separately 10 μl of each of the above three solutions to the plate. After developing and removal of the plate, dry in air. Spray with a 5% solution of vanillin in sulfuric acid and heat at 100℃ to the spots clear. The spots in the chromatogram obtained with the test solution correspond in position and colour to the spots in the chromatogram obtained with reference solution and reference drug solution.

(5) Triturate well 6 g of pills, add 60 ml of water, decoct for 30 minutes, and centrifuge, extract the supernatant with three 30-ml quantity of ethyl acetate, combine the ethyl acetate extracts, recover ethyl acetate to dryness, dissolve the residue in 20 ml of ethanol, and 0.1 g of activated charcoal, stir and filter. Evaporate the filtrate to dryness, and dissolve the residue in 0.5 ml of ethyl acetate as the test solution. To 0.5 g of Fructus Lycii reference drug, add 60 ml of water, decoct for 15 minutes, cool and filter. Extract the filtrate with 15 ml of ethyl acetate, evaporate to dryness, and dissolve the residue in 1 ml of ethyl acetate as the reference drug solution. Carry out the method for thin layer chromatography (Appendix Ⅵ B), using silica gel G as the coating substance and a mixture of chloroform, ethyl acetate and formic acid (2 : 3 : 1) as the mobile phase. Apply separately 10 μl of the test solutions and 5 μl of the reference solutions to the plate. After developing and removal of the plate, dry in air. Examine under ultraviolet light at 365 nm, the fluoresent spots in the chromatogram obtained with the test solution correspond in position and colour to the spots in the chromatogram obtained with the reference drug solution.

Other requirements Comply with the general requirements for pills (Appendix Ⅰ A).

Assay Carry out the method for high performance liquid chromatography (Appendix Ⅵ D).

Chromatographic system and system suitability Use octadecylsilane bonded silica gel as the stationary phase and a mixture of acetonitrile and 0.05% phosphoric acid solution (21 : 80) as the mobile phase. As detector a spectrophotometer set at 203 nm. The number of theoretical plates of the column is not less than 3000, calculated with reference to the peak of ginsenoside Rg1.

Reference solution Dissolve a quantity of ginsenoside Rg1 CRS, accurately weighed, in methanol to prepare a solution containing 0.25 mg per ml as the reference solution.

Test solution Weigh accurately 3 g of the pills, obtained in test of weight variation and cut into pieces, add 3 g of the kieselguhr, stir well. To a Soxhlet's extractor, add 100 ml of methanol, heat under reflux until the extract becomes almost colourless, and evaporate to dryness. Dissolve the residue in 30 ml of water, extract with three 20-ml quantity of chloroform, discard the chloroform extract, extract with four 30-ml quantity of *n*-butanol saturated with water, combine the *n*-butanol extracts, wash with three 30-ml quantity of 1% sodium hydroxide solution, and wash with water saturated with *n*-butanol to neutral. Recover *n*-butanol to dryness, dissolve the residue with methanol in a 10 ml volumetric flask, dilute with methanol to volume, and mix well.

Procedure Inject accurately 20 μl of each of the reference solution and the test solution into the column and calculate the content.

It contains not less than 3.0 mg of ginsenoside Rg1 ($C_{42}H_{72}O_{14}$) per pill, referred to Radix et Rhizoma Ginseng Rubra and Radix et Rhizoma Notoginseng.

Action To replenish *qi* and blood, and regulate menstruation and alleviate *qi* stagnation.

Indications Menstrual disorders, dysmenorrhea, metrorrhagia or metrostaxis, multicoloured leukorrhea, dizziness and prostration of blood, various deficiency syndromes after childbirth, and bone-steaming with hectic fever due to a deficiency of *qi* and *blood* and stagnation of *qi* and blood.

Usage and dosage 0.5-1 pill, twice a day.

Precaution Avoid raw, cold and greasy foods; cease medication when one catches common cold.

Strength 10.8 g per pill

Storage Preserve in tightly closed containers.

Erchen Wan
(二陈丸)

Erchen Pills

Ingredients Pericarpium Citri Reticulatae 250 g; Rhizoma Pinelliae (processed) 250 g; Poria 150 g; Radix et Rhizoma Glycyrrhizae 75 g.

Procedure Pulverize the above four ingredients to fine powder, sift and mix well. Break 50 g of Rhizoma Zingiberis Recens to pieces, add a quantitiy of water and press to make juice. Mix the Zingiber juice with the above powder to make pills and dry.

Description Greyish-brown to yellowish-brown watered pills; odour, slightly aromatic; taste, sweet and slightly pungent.

Identification (1) Microscopical: Irregular branched masses colourless, dissolved in chloral hydrate TS; hyphae colourless or brownish, 4-6 μm in diameter. Needle crystals of calcium oxalate in bundles, 32-144 μm long, occurring in mucilage cells or scattered. Prisms of calcium oxalate abundant in parenchyma. Fibre bundles surrounded by parenchymatous cells containing prisms of calcium oxalate, forming crystal fibres.

(2) To 5 g add 30 ml of methanol, heat under reflux in a water bath for 30 minutes, and filter. Concentrate the filtrate to about 5 ml as the test solution. Dissolve hesperidin CRS in methanol to produce a saturated solution as the reference solution. Carry out the method for thin layer chromatography (Appendix Ⅵ B), using silica gel G as the coating substance prepared with 0.5% sodium hydroxide solution and a mixture of ethyl acetate-methanol-water (100∶17∶13) as the mobile phase. Apply separately 2 μl of each of the two solutions to the plate. Develop about 3 cm, remove the plate and allow it to dry in air. Develop the plate about 8 cm once more, using the upper layer of toluene, ethyl acetate, formic acid and water (20∶10∶1∶1) as the mobile phase, remove the plate, and allow to dry in air. Spray with aluminium chloride TS, and examine under ultraviolet light at 365 nm. The fluorescent spot in the chromatogram obtained with the test solution corresponds in position and colour to the spot in the chromatogram obtained with the reference solution.

(3) Heat under reflux 10 g, triturate well, with 40 ml of ether for 1 hour, and filter. Heat under reflux the residue, with 50 ml of methanol for 1 hour, filter, and evaporate to dryness. Dissolve the residue in 40 ml of water, and extract with three 20-ml quantities of n-butanol saturated with water. Combine the *n*-butanol extracts, wash with three 20-ml quantities of water, discard the washings. Evaporate the extract to dryness, and dissolve the residue in 5 ml of methanol as the test solution. Prepare a solution of 1 g of Radix et Rhizoma Glycyrrhizae reference drug in the same manner as the reference drug solution. Dissolve ammonium glycyrrhizate CRS in methanol to prepare a solution containing 2 mg per ml as the reference solution. Carry out the method for thin layer chromatography (Appendix Ⅵ B), using silica gel G mixed with 1% solution of sodium hydroxide as the coating substance and a mixture of ethyl acetate, formic acid, glacial and water (15∶1∶1∶2) as the mobile phase. Apply separately 5 μl of the above three solutions to the plate. After developing and removal of the plate, dry in air. Spray with a 10% solution of sulfuric acid in ethanol and heat at 105℃ to the spots clear. Examine under ultraviolet light at 365 nm, the fluoresent spots in the chromatogram obtained with the test solution correspond in position and colour to the spots in the chromatogram obtained with the reference drug solution and the reference solution.

Other requirements Comply with the general requirements for pills (Appendix Ⅰ A).

Assay Carry out the method for high performance liquid chromatography (Appendix Ⅵ D).

Chromatographic system and system suitability Use octadecylsilane bonded silica gel as the stationary phase and a mixture of methanol, acetic acid and water (42∶4∶54) as the mobile phase. As detector a spectrophotometer set at 283 nm. The number of theoretical plates of the column is not less than 2000, calculated with reference to the peak of hesperidin.

Reference solution Weigh accurately 10 mg of hesperidin CRS, in a 50 ml volumetric flask, add a quantity of methanol to dissolve and dilute to volumn, mix well. Measure accurately 2 ml, in a 10 ml volumetric flask, dilute to volumn with the mobile phase, mix well for use, containing 40 μg of hesperidin per ml.

Test solution Pulverize 1 g of pills to powder, weigh accurately. To a Soxhlet's extractor, add a quantity of petroleum ether (60-90℃), heat under reflux for 2-3 hours, discard the petroleum ether, evaporate the residue to dryness, add a quantity of methanol, heat under reflux until the extract becomes almost colourless (6-8 hours), cool. Transfer the methanol extract to a 100 ml volumetric flask, wash the container with small quantity of methanol in portions, combine the washings to the same volumetric flask, dilute to volume and shake well. Measure accurately 3 ml, in a 10 ml volumetric flask, dilute to volumn with the mobile phase, mix well for use.

Procedure Inject accurately 10 μl of each of the reference solution and the test solution into the column and calculate the content.

It contains not less than 10.0 mg of hesperidin ($C_{28}H_{34}O_{15}$) per g, referred to pericarpium Citri Reticulatae.

Action To remove *dampness* and resolve phlegm, and regulate *qi* flow to harmonize the stomach.

Indications Coughing with expectoration of copious phlegm, fullness and oppressive feeling in the chest, nausea and vomiting due to accumulation of *damp-phlegm*.

Usage and dosage 9-15 g, 2 times a day.

Storage Preserve in well closed containers, protected from moisture.

Erding Keli
(二丁颗粒)

Erding Granules

Ingredients Herba Violae 250 g; Herba Lobeliae Chinensis 250 g; Herba Taraxaci 250 g; Radix Isatidis 250 g.

Procedure Decoct the above four ingredients with water twice, 2 hours for the first time, 1.5 hours for the second time. Combine the decoctions, and filter. Concentrate the filtrate to a thick extract with a relative density of 1.36 (70℃), add 900 g of sucrose, mix well, make granules, dry, and make to 1000 g granules; or concentrate the filtrate to a thin extract with a relative density of 1.20 (50℃), dry by spraying, add 100 g dextrin or lactose and 0.3 g stevioside, mix well, make granules, dry, and make to 1000 g granules without sucrose.

Description Dark brown granules; taste, sweet, slightly bitter, or slightly sweet, slightly bitter (without sucrose).

Identification Pulverize 15 g or 3 g (without sucrose) to fine powder, add 40 ml of methanol, ultrasonicate for 30 minutes, filter, and evaporate the filtrate to dryness. Dissolve the residue in 20 ml of hot water, allow to cool, extract with two 20-ml quantities of ethyl acetate, combine the ethyl acetate extracts, evaporate to dryness, and dissolve the residue in 1 ml of methanol as the test solution. Dissolve aesculetin CRS and caffeic acid CRS in methanol respectively to produce solutions containing 0.5 mg of each per ml as the reference solutions. Carry out the method for thin layer chromatography (Appendix Ⅵ B), using silica gel G mixed with sodium carboxymethylcellulose as the coating substance and a mixture of toluene, ethyl acetate, and formic acid (5∶3∶1) as the mobile phase. Apply separately 5-8 μl of each of the test solution and the reference solutions to the plate. After developing and removing the plate, dry in the air, and expose the plate to iodine vapour to the spots clear. The spots in the chromatography obtained with the test solution correspond in position and colour to the spots in the chromatography obtained with the reference solutions.

Other requirements Comply to the general requirements for medicine granules (Appendix Ⅰ C).

Assay Carry out the method for high performance liquid chromatography (Appendix Ⅵ D).

Chromatography system and system suitability Use octadecylsilane bonded silica gel as the stationary phase and a mixture of methanol, water, and glacial acetic acid (20∶80∶0.4) as the mobile phase. As detector a spectrophotometer set at 353 nm. The number of theoretical plates of the column is not less than 3000, calculated with the reference to the peak of aesculetin.

Reference solution Weigh accurately a quantity of aesculetin CRS, dissolve in methanol to produce a reference solution containing 20 μg per ml.

Test solution Pulverize the granules obtained under the test of packing variation to fine powder, weigh accurately 0.5 g or 0.3 g (without sucrose) to a stopper conical flask, add accurately 25 ml of methanol and weigh. Ultrasonicate (power 250 W, frequence 50 kHz) for 30 minutes, cool, weigh again, and replenish the lost weight with methanol. Mix well, filter, and use the successive filtrate as the test solution.

Procedure Inject accurately 10 μl of each of the reference solution and the test solution into the column, respectively, and calculate the content.

It contains not less than 1.8 mg of aesculetin ($C_9H_6O_4$) per pack, referred to Herba Violae.

Action To clear *heat* and *toxic materials*.

Indications Furuncles and carbuncles, or sore throat, or acute conjunctivitis due to abundant *wind-heat* and *toxic materials*.

Usage and dosage 1 pack to be dissolved in boiled water for oral administration, 3 times a day.

Precaution Be cautious about diabetes patients (as it contains cane sugar granules)

Strength (1) 20 g per pack
(2) 4 g per pack (without sucrose)

Storage Preserve in tightly closed containers.

Erdong Gao (二冬膏)

Erdong Concentrated Decoction

Ingredients Radix Asparagi 500 g; Radix Ophiopogonis 500 g.

Procedure Decoct the two ingredients with water three times (3, 2 and 2 hours respectively). Combine the decoctions, filter and concentrate the filtrate to a thick extract with relative density of 1.21-1.25 (80℃). To each 100 g of the extract add 50 g of refined honey and mix well.

Description A brownish-yellow viscous semifluid; taste, sweet and slightly bitter.

Other requirements Complies with the general requirements for concentrated decoctions (Appendix Ⅰ F).

Action To replenish *yin* to moisten the lung.

Indications Dry cough with expectoration of scanty phlegm or blood-flecked phlegm, dry nose and sore throat due to a deficiency of *lung-yin*.

Usage and dosage 9-15 g, twice a day.

Storage Preserve in tightly closed containers, stored in a cool place.

Erkangning Tangjiang (儿康宁糖浆)

Erkangning Syrup

Ingredients Radix Codonopsis; Radix Astragali; Rhizoma Atractylodis Macrocephalae; Poria; Rhizoma Dioscoreae; Semen Coicis; Radix Ophiopogonis; Radix Polygoni Multiflori Praeparata; Fructus Jujubae; Fructus Crataegi (charred); Fructus Hordei Germinatus (stir-baked); Ramulus Mori.

Procedure Decoct all the above 12 ingredients with water for 2 times, combine the decoctions and filter. Concentrate the filtrate to a quantity of amount, add sucrose and refined honey, mix well, filter, add a quantity of citric acid and preservative, shake thoroughly, add 0.6 ml of tangerine peel oil and water to the volume of 1000 ml, mix well and pack.

Description A viscous, brownish-yellow to brown liquid; odour, aromatic; taste, sweet.

Identification (1) Extract 10 ml with two 20-ml quantities of *n*-butanol saturated with water, separate the *n*-butanol extract and evaporate to dryness. Dissolve the residue in 1 ml of methanol as the test solution. To 1 g of Radix Ophiopogonis reference drug, add 20 ml of *n*-butanol saturated with water, ultrasonicate for 20 minutes, filter and evaporate the filtrate to dryness. Dissolve the residue in 1 ml of *n*-butanol as the reference drug solution. Carry out the method for thin layer chromatography (Appendix Ⅵ B), using silica gel G as the coating substance and the upper layer of *n*-butanol, acetic acid and water (4∶1∶1) as the mobile phase. Apply separately 5-10 μl of each of the test solution and the reference drug solution to the plate. After developing and removal of the plate, dry in air. Spray with 10% solution of sulfuric acid in ethanol, heat at 105℃ for about 5 minutes. The spots in the chromatogram obtained

with the test solution correspond in position and colour to the spots in the chromatogram obtained with the reference drug solution.
(2) Extract 20 ml with two 20-ml quantities of chloroform, combine the chloroform extracts and evaporate to dryness. Dissolve the residue in 1 ml of chloroform as the test solution. Dissolve emodin CRS in chloroform to produce a solution containing 1 mg per ml as the reference solution. Carry out the method for thin layer chromatography (Appendix Ⅵ B), using silica gel G as the coating substance and a mixture of toluene, ethyl acetate and formic acid (15∶2∶1) as the mobile phase. Apply separately to the plate 10-20 μl of the test solution and 5 μl of the reference solution. After developing and removal of the plate, dry in air, and examine under ultraviolet light at 365 nm. The fluorescent spot in the chromatogram obtained with the test solution corresponds in position and colour to the spot in the chromatogram obtained with the reference solution; expose the plate to ammonia vapour and examine in sunlight, the colour of the spot turns red.
(3) Extract 20 ml with three 20-ml quantities of *n*-butanol saturated with water, combine the *n*-butanol extracts, wash with three 20-ml quantities of 1% solution of sodium hydroxide, and wash with water saturated with *n*-butanol to neutral. Discard the washings, evaporate the *n*-butanol extract to dryness. Dissolve the residue in 1 ml of methanol as the test solution. Dissolve astragaloside Ⅳ CRS in methanol to produce a solution containing 1 mg per ml as the reference solution. Carry out the method for thin layer chromatography (Appendix Ⅵ B), using silica gel G as the coating substance and the lower layer of chloroform, ethyl acetate, methanol and water (10∶20∶11∶5) (allow to stand below 10℃) as the mobile phase. Apply separately 10 μl of the test solution and 5 μl of the reference solution to the plate. After developing and removal of the plate, dry in air. Spray with 10% solution of sulfuric acid in ethanol, and heat at 105℃ to the spots clearly. The spot in the chromatogram obtained with the test solution corresponds in position and colour to the spot in the chromatogram obtained with the reference solution.

Relative density Not less than 1.24 (Appendix Ⅶ A).

pH value 4.0-5.0 (Appendix Ⅶ G).

Other requirements Comply with the general requirements for syrup (Appendix Ⅰ H).

***n*-Butanol extractives** Accurately measured 20 ml of the syrup, in a separator, extract with successive quantities of 30, 20, 20, 20 and 20 ml of *n*-butanol saturated with water, combine the *n*-butanol extracts in a tared evaporating dish, previously dried to constant weight, and evaporate to dryness. Dry at 105℃ for 3 hours and allow to cool for 30 minutes in a desiccator. Weigh accurately and calculate.
It contains not less than 3.0 percent of the *n*-butanol extractives.

Assay Carry out the method for high performance liquid chromatography (Appendix Ⅵ D).

Chromatographic system and system suitability Use octadecylsilane bonded silica gel as the stationary phase and a mixture of acetonitrile and water (25∶75) as the mobile phase. As detector a spectrophotometer set at 320 nm. The number of theoretical plates of the column is not less than 2000, calculated with reference to the peak of 2,3,5,4'-Tetrahydroxystilbene-2-*O*-β-D-glucoside.

Reference solution Dissolve a quantity of 2,3,5,4'-Tetrahydroxystilbene-2-*O*-β-D-glucoside CRS, accurately weighed, in dilute ethanol to produce a solution containing 20 μg per ml as the reference solution.

Test solution Measure accurately 5 ml, in a 25 ml amber volumetric flask, dilute to volumn with dilute ethanol, mix well, centrifuge, use the supertatant as the test solution.

Procedure Inject accurately 10 μl each of the reference solution and the test solution into the column and measure.
It contains not less than 30 μg of 2,3,5,4'-Tetrahydroxystilbene-2-*O*-β-D-glucoside ($C_{20}H_{22}O_9$) per ml.

Action To replenish *spleen-qi*, promote digestion and whet appetite.

Indications Anorexia with manifestations of poor appetite, indigestion, sallow complexion, emaciation and loose stools due to a deficiency of *spleen-qi* and *stomach-qi*

Usage and dosage 10 ml, 3 times a day; 20-30 days making a course of treatment.

Strength (1) 10 ml per phial (2) 150 ml per bottle

Storage Preserve in well closed containers, and store in dark and cool place.

Erlong Zuoci Wan
(耳聋左慈丸)

Erlong Zuoci Pills

Ingredients Magnetitum (calcined) 20 g; Radix Rehmanniae (Praeparata) 160 g; Fructus Corni (processed) 80 g; Cortex Moutan 60 g; Rhizoma Discoreae 80 g; Poria 60 g; Rhizoma Alismatis 60 g; Radix Bupleuri Marginati 20 g.

Procedure Pulverize the above eight ingredients to fine powder, sift and mix well. To each 100 g of powder add 35-50 g of refined honey and a quantity of water to make pills and dry; Alternatively add 90-110 g of refined honey to make small honeyed pills or big honeyed pills.

Description Brownish-black water-honeyed pills, blackish-brown small honeyed pills or big honeyed pills; taste, sweet, slightly sour.

Identification (1) Microscopical: Irregular branched masses colourless, dissolved in chloral hydrate TS; hyphae colourless or pale brown, 4-6 μm in diameter. clusters of calcium oxalate occurring in colourless parachymatous cells, sometimes several clusters in one cell. Parenchymatous cells subrounded, with elliptical pits, gathered into pit groups. The anticlinal walls of endodermis cells sinuous, relatively thickened, lignified, with sparse and fine pit-canals. Raphides of calcium oxalate occurring in mucilage cells, 80-240 μm long, needles 2-8 μm in diameter. Vittae containing yellow or brownish-yellow secretion. Irregular fragments black varying in size.
(2) To about 0.1 g add 5 ml of dilute hydrochloric acid, stir thoroughly, heat to boil for 2-3 minutes and filter. The filtrate produces the characteristic reactions of ferric salts (Appendix Ⅳ).
(3) Grind well 9 g of the small or the big honeyed pills, cut into pieces, with 5 g of kieselguhr, or pulverize 6 g of the water-honeyed pills, add 70 ml of ether, heat under reflux at a lower temperature for 1 hour, and filter. Expel the ether from the filtrate and dissolve the residue in 1 ml of acetone as the test solution. Dissolve paeonol CRS in acetone to produce a solution containing 1 mg per ml as the reference solution. Carry out the method for thin layer chromatography (Appendix Ⅵ B), using silica gel G as the coating substance and a mixture of cyclohexane and ethyl acetate (3∶1) as the mobile phase. Apply separately 5 μl of each of the two solutions to the plate. After developing and

removal of the plate, dry in air. Spray with a 5% solution of ferric chloride in ethanol acidated with hydrochloric acid and heat to the spots clear The spot in the chromatogram obtained with the test solution corresponds in position and colour to the spot in the chromatogram obtained with the reference solution.

(4) Dissolve ursolic acid CRS in dehydrated ethanol to produce a solution containing 0.5 mg per ml as the reference solution. Carry out the method for thin layer chromatography (Appendix Ⅵ B), using silica gel G as the coating substance and a mixture of cyclohexane, chloroform, ethyl acetate and glacial acetic acid (20∶5∶8∶0.5) as the mobile phase. Apply separately 4 μl of each of the test solution obtained in the Identification test (3) and the reference solution to the plate. After developing and removal of the plate, dry in air. Spray with a 10% solution of sulfuric acid in ethanol and heat at 105℃ to the spots distinct. The spot in the chromatogram obtained with the test solution corresponds in position and colour to the spot in the chromatogram obtained with the reference solution.

Other requirements Comply with the general requirements for pills (Appendix Ⅰ A).

Assay Grind water-honeyed pills, or chip small honeyed pills and big honeyed pills, obtained under the test of weight variation, into pieces, weigh accurately 5 g, add 30 ml of water, and warm for full dispersion on a water bath at 60℃. Add 1 g of kieselguhr, stir well, filter, wash the residue with 30 ml of water and heat at 100℃ to dryness. Transfer the residue along with the filter paper to a Soxhlet's extractor, and extract under reflux with a quantity of ether for 4 hours. Recover the ether thoroughly, macerate the residue with two 15-ml quantities of petroleum ether (30-60℃) for about 2 minutes each, and discard the petroleum ether solution. Dissolve the residue in a mixture of chloroform and dehydrated ethanol (2∶3) by slight warming, transfer to a 5 ml volumetric flask, dilute with the same mixture solvent to volume, shake well, and use it as the test solution. Dissolve a quantity of ursolic acid CRS, weighed accurately, in dehydrated ethanol to produce a solution cotaining 0.5 mg per ml as the reference solution. Carry out the method for thin layer chromatography (Appendix Ⅵ B), using silica gel G as the coating substance and a mixture of cyclohexane, chloroform, ethyl acetate and formic acid (20∶5∶8∶0.1) as the mobile phase. Apply accurately 10 μl of the test solution of the small honeyed pills or the big honeyed pills, or 5 μl of the test solution of water-honeyed pills, and 1 μl, and 3 μl of the reference solution to the plate alternatively. After developing and removal of the plate, dry in air. Spray with a 10% solution of sulfuric acid in ethanol, heat at 105℃ to the spots clear. Cover the plate with a same sized glass and fix with tape. Carry out the method for thin layer chromatography (Appendix Ⅵ B, A thin layer chromatographic scanning method), scan at a wavelength of $\lambda=540$ nm. Measure the integrated values of absorbance of the test solutions and the reference solutions respectively, and calculate the content.

It contains not less than 0.15 mg per gram of water-honeyed pills, 0.10 mg per gram of small honeyed pills, and 0.90 mg per big honeyed pill, of ursolic acid ($C_{30}H_{48}O_3$), referred to Fructus Corni.

Action To nourish the kidney and soothe the liver.

Indications Tinnitus, poor hearing or deafness, dizziness and blurred vision due to preponderance of *yang* from *yin* deficiency.

Usage and dosage 6 g of water-honeyed pills, 9 g of small honeyed pills or 1 big honeyed pill, twice a day.

Strength 9 g per big honeyed pill

Storage Preserve in tightly closed containers.

Ermiao Wan
(二妙丸)

Ermiao Pills

Ingredients Rhizoma Atractylodis (stir-baked) 500 g; Cortex Phellodendri Chinensis (stir-baked) 500 g.

Procedure Pulverize the two ingredients to fine powder, sift and mix well. Make pills with water and dry.

Description Yellowish-brown watered pills; odour, slightly aromatic; taste, bitter and astringent.

Identification (1) Microscopical: Needle crystals of calcium oxalate fine, 10-32 μm long, irregularly filling in parenchymatous cells. Fibre bundles bright yellow, surrounded by parenchymatous cells containing prisms of calcium oxalate, forming crystal fibres, the crystal cells with lignified and thickened walls.

(2) Pulverize 2 g of the pills to powder, add 15 ml of ether, ultrasonicate for 15 minutes, and filter. Evaporate the filtrate to dryness, and dissolve the residue in 1 ml of ethylacetate as the test solution. Prepare a solution of 1 g of Rhizoma Atractylodis reference drug in the same manner as the reference drug solution. Carry out the method for thin layer chromatography (Appendix Ⅵ B), using silica gel G as the coating substance and a mixture of petroleum ether (60-90℃) and ethyl acetate (10∶1) as the mobile phase. Apply separately 5 μl of the each solutions to the plate. Develop about 4 cm, remove the plate and dry in air. Develop the plate about 7 cm once more, using cyclohexane as the mobile phase, remove the plate and dry in air. Spray with a 5% solution of p-dimethylaminobenzaldehyde in 10% solution of sulfuric acid in ethanol and heat at 80℃ to the spots clear. The spots in the chromatogram obtained with the test solution correspond in position and colour to the spots in the chromatogram obtained with the reference drug solution.

(3) To 0.1 g of the pulverized sample, add 5 ml of methanol, heat under reflux on a water bath for 15 minutes and filter, to the filtrate add methanol to 5 ml and use it as the test solution. Prepare a solution with 0.1 g of Cortex Phellodendri reference drug as the reference drug solution in the same manner. Dissolve berberine hydrochloride CRS in methanol to produce a solution containing 0.5 mg per ml as the reference solution. Carry out the method for thin layer chromatography (Appendix Ⅵ B), using silica gel G as the coating substance and a mixture of benzene, ethyl acetate, methanol, isopropanol and concentrated ammonia TS (12∶6∶3∶3∶1) as the mobile phase. Apply separately 1 μl each of the three solutions to the plate. After developing in a chamber pre-equilibrated with ammonia vapour for 15 minutes, and removal of the plate, dry in air, examine under ultraviolet light at 365 nm. The yellow fluorescent spots in the chromatogram obtained with the test solution correspond in position and colour to the spots in the chromatogram obtained with the reference drug solution and the reference solution.

Other requirements Comply with the general requirements for pills (Appendix Ⅰ A).

Assay Apply 1 g of the pulverized sample, weighed accurately, to a Soxhlet's extractor, add an appropriate quantity of ether, heat under reflux on a water bath for 1-2 hours, discard the ether extract, remove the ether of the residue, add an appropriate quantity of methanol, heat under reflux until the extract colourless. Transfer (concentrate properly if necessary) the methanolic solution to a 50 ml

volumetric flask and dilute with methanol to volume, mix well, used as the test solution. Dissolve Berberine hydrochloride CRS in methanol to produce a solution containing 0.06 mg per ml as the reference solution. Carry out the method for thin layer chromatography (Appendix Ⅵ B), using silica gel G as the coating substance and a mixture of benzene, ethyl acetate, methanol, isopropanol and strong ammonia TS (12∶6∶3∶3∶1) as the mobile phase. Apply separately 1 μl of the test solution and 1 μl, 3 μl of the reference solution alternately to the plate. After developing in a twin-trough chamber pre-equilibrated with ammonia vapour and mobile phase vapour for 15 minutes and removal of the plate, dry in air. Carry out the method for thin layer chromatography (Appendix Ⅵ B thin layer chromatographic scanning method), scan at the wavelength λ_{ex} = 365 nm with fluorescence mode, measure the integrated value and calculate the content.
It contains not less than 3.0 mg of berberine hydrochloride ($C_{20}H_{18}ClNO_4$) per gram, referred to Cortex phellodendri.

Action To eliminate *dampness* and clear *heat*.

Indications Red, swollen and painful legs and knees with a hot sensation, erysipelas of the lower limbs, morbid leukorrhea, or wetness and itching of the scrotum due to pouring of *damp-heat*.

Usage and dosage 6-9 g, twice a day.

Storage Preserve in well closed containers, protected from moisture.

Ershiwuwei Shanhu Wan
(二十五味珊瑚丸)

Ershiwuwei Shanhu Pills

Ershiwuwei shanhu Pills are prescription used by Tibetan Nationality.

Ingredients Os Corallii 75 g; Margarita 15 g; Qingjinshi 20 g; Concha Margaritifera 50 g; Fructus Chebulae 100 g; Radix Aucklandiae 60 g; Flos Carthami 80 g; Cloves Flos Caryophylli 35 g; Lignum Aquilariae Resinatum 70 g; Cinnabaris 30 g; Os Draconis 40 g; Calamina 25 g; Naoshi 25 g; Magnetitum 25 g; Limonitum 25 g; Semen Sesami 40 g; Fructus Lagenariae 30 g; Flos Asteris 45 g; Herba Swertiae Bimaculatae 80 g; Rhizoma Acori Calami 50 g; Radix Aconiti Kusnezoffii 45 g; Herba Chrysanthemi Tatsiiensis 75 g; Radix et Rhizoma Glycyrrhizae 75 g; Stigma Croci 25 g; Moschus 2 g.

Procedure Pulverize the above ingredients, except Os Corallii, Margarita, Stigma Croci and Moschus, to fine powder and sift. Pulverize Os Corallii, Margarita, Stigma Croci and Moschus to fine powder, triturate with the above powder, sift, and mix well. Make pills with water, dry in the shade.

Description Redish-brown watered pills; odour, slightly aromatic; taste, sweet, bitter and astringent.

Identification (1) To 0.2 g of the powder add 3 ml of hydrochloric acid and 1 ml of nitric acid, heat on a water bath for 10 minutes, add 4 ml of water, and filter. To 1 drop of the filtrate add a quantity of copper iodide (mix equal volumes of copper sulfate TS and potassium iodide TS, eliminate the excess iodine by adding a small quantity of sodium thiosulfate, and use the precipitate), allow to stand, the white precipitate turns to red. To another 1 ml of the filtrate add 0.5 ml of barium chloride TS, a white precipitate is produced.

(2) To 0.5 g of the powder add 4 ml of methanol, ultrasonicate for 10 minutes, allow to stand, and use the supernatant as the test solution. Prepare a solution with 20 mg of Stigma Croci reference drug in the same manner and use it as the reference drug solution. Carry out the method for thin layer chromatography (Appendix Ⅵ B), using silica gel G as the coating substance and a mixture of ethyl acetate, formic acid and water (5∶1∶0.8) as the mobile phase. Apply separately 10 μl of each of the two solutions to the plate. After developing and removal of the plate, allow to dry in air. The three yellow spots in the chromatogram obtained with the test solution correspond in position and colour to the spots in the chromatogram obtained with the reference drug solution.
(3) Pulverize 3 g of the pills to powder, add 10 ml of 80% acetone, ultrasonicate for 30 minutes, filter, use the filtrate as the test solution. Prepare a solution of 0.5 g of Flos Carthami reference drug in the same manner as the reference drug solution. Carry out the method for thin layer chromatography (Appendix Ⅵ B), using silica gel G as the coating substance and a mixture of ethyl acetate, formic acid, water, and methanol (7∶2∶3∶0.4) as the mobile phase. Apply separately 10 μl of the above two solutions to the plate. After developing and removal of the plate, dry in air. A major spot in the chromatogram obtained with the test solution correspond in position and colour to the spots in the chromatogram obtained with the reference drug solution.

Other requirements Comply with the general requirements for the pills (Appendix Ⅰ A), except the disintegration time.

Action To promote the restoration of consciousness, blood circulation and relieve pain.

Indications "*bai mai*" disease, unconsciousness, numbness of body, dizziness, headache, abnormal blood pressure, epilepsy and cranial neuralgia.

Usage and dosage 1 g, once a day, taken after infusing in boiling water.

Strength (1) 1 g per 4 pills (2) 1 g per pill

Storage Preserve in tightly closed containers.

Ershiwuwei Songshi Wan
(二十五味松石丸)

Ershiwuwei Songshi Pills

Ershiwuwei Songshi Pills are prescription used by Tibetan Nationality.

Ingredients Songshi 50 g; Margarita 10 g; Os Corallii 40 g; Cinnabaris 20 g; Fructus Chebulae (cored) 50 g; Pulvis Ferri (processed with Fructus Chebulae) 100 g; Fructus Phyllanthi 50 g; Extractum Faeces Trogopterori 40 g; Lignum Santali Albi 40 g; Lignum Dalbergiae Odoriferae 40 g; Fructus Aristolochiae 50 g; Herba Adhadotae vasicae 50 g; Calculus Bovis 5 g; Radix Aucklandiae 60 g; Herba Meconopsis 50 g; Radix Aconiti Naviculare 40 g; Semen Myristicae 20 g; Cloves Flos Caryophylli 25 g; Herba Saxifragae Umbellulatae 50 g; Fructus Terminaliae Billericae (cored) 5 g; Concretio Silicea Bambusae 35 g; Stigma Croci 5 g; Flos Gossampini 35 g; Moschus 0.25 g; Calx Pulveratum 35 g.

Procedure Pulverize the above ingredients, except Calculus Bovis, Stigma Croci, Moschus and Extractum Faeces Trogopterori, to fine powder and sift. Pulverize Calculus Bovis, Stigma Croci, and Moschus to fine powder, triturate

with the above powder, sift and mix well, make pills with Extractum Faeces Trogopterori and a quantity of water, dry in the shade.

Description Black watered pills; odour, aromatic; taste, bitter and astringent.

Identification (1) To 1 g, finely powdered, add 20 ml of acetone, ultrasonicate for 30 minutes, and filter and keep the residue for latter use. Concentrate the filtrate to 1 ml as the test solution. Dissolve cholic acid CRS in acetone to produce a solution containing 0.2 mg per ml as the reference solution. Carry out the method for thin layer chromatography (Appendix Ⅵ B), using silica gel G as the coating substance and a mixture of ether, chloroform and glacial acetic acid (2∶2∶1) as the mobile phase. Apply separately 10 μl of each of the two solutions to the plate. After developing and removal of the plate, dry in air. Spray with a 10% solution of sulfuric acid in ethanol and heat at 105℃ for several minutes, examine under ultraviolet light at 365 nm. The fluorescent spot in the chromatogram obtained with the test solution corresponds in position and colour to the spot in the chromatogram obtained with the reference solution.

(2) Take the drug residue, obtained under Identification (1) and dry in air, moisten with concentrated ammonia TS, add 5 ml of dehydrated ethanol, shake for 1 minute, allow to stand, use the supernatant as the test solution. Prepare a solution with 20 mg of Stigma Croci reference drug in the same manner and use it as the reference drug solution. Carry out the method for thin layer chromatography (Appendix Ⅵ B), using silica gel G as the coating substance and a mixture of ethyl acetate, formic acid and water (4∶1∶1) as the mobile phase. Apply separately 10 μl of each of the two solutions to the plate. After developing and removal of the plate, dry in air. The three yellow spots in the chromatogram obtained with the test solution correspond in position and colour to the spots in the chromatogram obtained with the reference drug solution.

(3) Pulverize 4 g of the pills to powder, add 20 ml of petroleum ether (60-90℃), ultrasonicate for 30 minutes, filter, and evaporate the filtrate to 1 ml as the test solution. Prepare a solution of 2 g of Radix Aucklandiae reference drug in the same manner as the reference drug solution. Carry out the method for thin layer chromatography (Appendix Ⅵ B), using silica gel G mixed with sodium carboxy methylcellulose as the coating substance and a mixture of petroleum ether (60-90℃) and ethyl acetate (9∶1) as the mobile phase. Apply separately 10 μl of the above two solutions to the plate. After developing and removal of the plate, dry in air. Spray with a 5% solution of vanillin in sulfuric. Spots in the chromatogram obtained with the test solution correspond in position and colour to the spots in the chromatogram obtained with the reference drug solution.

(4) Pulverize 4 g of pills to powder, add 20 ml of chloroform, ultrasonicate for 30 minutes, filter, and evaporate the filtrate to 1 ml as the test solution. Prepare a solution of 2 g of Semen Myristicae reference drug in the same manner as the reference drug solution. Carry out the method for thin layer chromatography (Appendix Ⅵ B), using silica gel G mixed with sodium carboxy methylcellulose as the coating substance and a mixture of petroleum ether (60-90℃) and acetone (10∶0.3) as the mobile phase. Apply separately 10 μl of the above two solutions to the plate. After developing and removal of the plate, dry in air. Spray with a 10% solution of phosphomolybdic. Spots in the chromatogram obtained with the test solution correspond in position and colour to the spots in the chromatogram obtained with the reference drug solution.

Other requirements Comply with the general requirements for pills (Appendix Ⅰ A), except the disintegration time.

Action To remove *heat* and counteract *toxicity*, to regulate the flow of *qi* in the liver and gall-bladder, to eliminate blood stasis.

Indications Stagnation of *qi* in the liver, blood stasis, liver tenderness, cirrhosis, acute and chronic hepatitis, cholecys-titis.

Usage and dosage 1 g, once a day, taken after infusing in boiling water.

Strength (1) 1 g per 4 pills (2) 1 g per pill

Storage Preserve in tightly closed containers.

Ershiwuwei Zhenzhu Wan
(二十五味珍珠丸)

Ershiwuwei Zhenzhu Pills

Ershiwuwei Zhenzhu Pills are prescription used by Tibetan Nationality, and prepared from Margarita, Semen Myristicae, Calx Pulveratum, Fructus Tsaoko, Flos Caryophylli, Stigma Croci, Calculus Bovis, Moschus, etc.

Description Yellowish-brown and slightly red watered pills; odour, aromatic; taste, bitter and pungent.

Identification (1) To 3 g, finely powdered, add 20 ml of acetone, ultrasonicate for 20 minutes, filter and keep the residue for latter use. Concentrate the filtrate to 2 ml as the test solution. Dissolve cholic acid CRS in acetone to produce a solution containing 0.4 mg per ml as the reference solution. Carry out the method for thin layer chromatography (Appendix Ⅵ B), using silica gel G as the coating substance and a mixture of chloroform, acetone and formic acid (2∶1∶0.1) as the mobile phase. Apply separately 3 μl of each of the two solutions to the plate. After developing and removal of the plate, dry in air. Spray with 10% solution of sulfuric acid in ethanol, heat at 105℃ to the spots distinct, examine under ultraviolet light at 365 nm. The fluorescent spot in the chromatogram obtained with the test solution corresponds in position and colour to the spot in the chromatogram obtained with the reference solution.

(2) To 0.2 g of the residue obtained under Identification test (1) in an ampoule, add 5 ml of dilute hydrochloric acid TS, seal hermetically the ampoule, heat in an oven at 105℃ for 20 hours, use the supernatant as the test solution. Prepare a solution with 0.02 g of Margarita reference drug as the reference drug solution in the same manner. Carry out the method for thin layer chromatography (Appendix Ⅵ B), using silica gel G as the coating substance and a mixture of phenol and water (7∶2) as the mobile phase. Apply separately 4 μl of each of the two solutions to the plate. After developing and removal of the plate, dry in air and heat at 105℃ for 5-10 minutes. Spray immediately with 0.2% solution of ninhydrin in ethanol, heat at 105℃ to the spots clear. The purplish-red spots in the chromatogram obtained with the test solution correspond in position and colour to the spots in the chromatogram obtained with the reference drug solution.

Other requirements Comply with the general requirements for pills (Appendix Ⅰ A), except the disintegration time.

Action To induce sedation, to promote the restoration of consciousness.

Indications Apoplexy, hemiplegia, distortion of the face, coma, confusion, delirium, and mania.

Usage and dosage 1 g, 1-2 times a day, taken after infusing

in boiling water.

Strength (1) 1 g per 4 pills (2) 1 g per pill

Storage Preserve in tightly colsed containers.

Ertong Qingfei Wan
(儿童清肺丸)

Ertong Qingfei Pills

Ingredients Herba Ephedrae 10 g; Semen Armeniacae Amarum (stir-baked) 20 g; Gypsum Fibrosum 40 g; Radix et Rhizoma Glycyrrhizae 10 g; Cortex Mori (stir-baked with honey) 30 g; Pericarpium Trichosanthis 30 g; Radix Scutellariae 40 g; Radix Isatidis 40 g; Exocarpium Citri Rubrum 30 g; Rhizoma Pinelliae Preparata 30 g; Fructus Perillae (stir-baked) 20 g; Semen Lepidii seu Descurainiae 10 g; Bulbus Fritillariae Thunbergii 40 g; Folium Perillae 20 g; Radix et Rhizoma Asari 8 g; Herba Menthae 30 g; Folium Eriobotryae (stir-baked with honey) 40 g; Rhizoma Cynanchi Stauntonii 30 g; Radix Peucedani 20 g; Rhizoma Acori Tatarinowii 30 g; Radix Trichosanthis 30 g; Lapis Chloriti (calcined) 10 g.

Procedure Pulverize the above twenty two ingredients to fine powder, sift and mix well. To each 100 g of the powder add 170-180 g of refined honey to make big honeyed-pills.

Description Black big honeyed pills; taste, bitter and pungent.

Identification (1) Microscopical: Irregular plate crystals colourless, with straight striations. Bast fibres pale yellow, fusiform, walls thickened and with fine pit-canals. Fibres colourless, 13-26 μm in diameter, walls thickened, pits indistinct. Stomata particular, guard cells dumb-bell shaped in lateral view. The inner epidermal cells of testa yellow, polygonal or elongated polygonal, walls slightly thickened. Mesophyll tissues containing fine calcium oxalate clusters, 4-8 μm in diameter. Compound starch granules composed of 2-14 components, usually combined by 1 big helmet-shaped component and several tiny components.

(2) Heat under reflux 10 g, triturate well with 5 g kieseguhr, mix well, with 2 ml of concentrated ammonia TS, 5 ml of ethanol and 50 ml of ether for 1 hour, and filter. Evaporate the filtrate at low temperature to dryness, dissolve the residue in a quantity of methanol, add 1 g of neutral aluminium oxide, stir well, and apply to a small column (10 mm in diameter) packed with neutral aluminium oxide (100-200 mesh, 6 g). Elute with 30 ml of methanol, collect the eluates, and evaporate at low temperature to 0.5 ml as the test solution. Dissolve ephedrine hydrochloride CRS in methanol to produce a solution containing 1 mg per ml as the reference solution. Carry out the method for thin layer chromatography (Appendix Ⅵ B), using silica gel G as the coating substance and a mixture of chloroform, methanol and concentrated ammonia TS (20∶5∶0.5) as the mobile phase. Apply separately 10 μl of the test solutions and 2 μl of the reference solutions to the plate. After developing and removal of the plate, dry in air. Spray with a 10% solution of sulfuric acid in ethanol and heat at 105℃ to the spots clear. The spots in the chromatogram obtained with the test solution correspond in position and colour to the spots in the chromatogram obtained with the reference solution.

(3) Heat under reflux 3 g, triturate well with 1 g of kieseguhr, mix well, with 30 ml of ether for 1 hour, filter and keep the filtrate for the latter use. To the residue, expel ether, add 30 ml of 70% ethanol, heat under reflux for 1 hour, and filter. Evaporate the filtrate to dryness, dissolve the residue in a quantity of water, and apply to a small column (10 mm in diameter) packed with polyamide (60-80 mesh, 1 g) and water. Pre-elute with 50 ml of water, discard the water solution and elute with 50 ml of 85% methanol. Collect the eluates, evaporate to dryness and dissolve the residue in 1 ml of methanol as the test solution. Dissolve baicalin CRS in methanol to produce a solution containing 1 mg per ml as the reference solution. Carry out the method for thin layer chromatography (Appendix Ⅵ B), using polyamide film as the absorbant and a mixture of ethyl acetate, butanone, methanol and water (5∶3∶1∶1) as the mobile phase. Apply separately 4 μl of the test solutions and 1 μl of the reference solutions to the film. After developing and removal of the film, dry in air. Spray with a 10% solution of ferric chloride in ethanol and heat to the spots clear. The spots in the chromatogram obtained with the test solution correspond in position and colour to the spots in the chromatogram obtained with the reference solution.

(4) Evaporate the ether solution under indentification (3) to dryness, and dissolve in 1 ml of a mixture of dehydrated ethanol and chloroform (3∶2) as the test solution. Heat under reflux 0.5 g of Folium Eriobotryae reference drug, with 20 ml of ether for 1 hour, and filter. Evaporate the filtrate to dryness, and prepare in the same manner as the reference drug solution. Dissolve ursolic acid CRS in methanol to produce a solution containing 1 mg per ml as the reference solution. Carry out the method for thin layer chromatography (Appendix Ⅵ B), using silica gel G as the coating substance and a mixture of cyclohexane, chloroform and ethyl acetate (20∶5∶8) as the mobile phase. Apply separately 5 μl of the test solutions and 2 μl of the reference drug solution and 1 μl of the reference solution to the plate. After developing and removal of the plate, dry in air. Spray with a 10% solution of sulfuric acid in ethanol and heat at 105℃ to the spots clear. The spots in the chromatogram obtained with the test solution correspond in position and colour to the spots in the chromatogram obtained with the reference drug solution and the reference solution.

Other requirements Comply with the general requirement for pills (Appendix Ⅰ A).

Assay Carry out the method for high performance liquid chromatography (Appendix Ⅵ D).

Chromatographic system and system suitability Use octadecylsilane bonded silica gel as the stationary phase and a mixture of methanol, water and phosphoric acid (47∶53∶0.2) as the mobile phase. As detector a spectrophotometer set at 280 nm. The number of theoretical plates of the column is not less than 2500, calculated with reference to the peak of baicalin.

Reference solution Dissolve a quantity of baicalin CRS, accurately weighed, in methanol to prepare a solution containing 30 μg per ml as the reference solution.

Test solution Cut a quantity of the pills obtained under the weight variation test into pieces, triturate well with an half quantity of kieseguhr, mix well. Weigh accurately 1.5 g of the powder to a conical flask, add 40 ml of 70% ethanol, heat under reflux on a water bath for 2 hour, cool, filter, transfer the filtrate to a 100 ml volumetric flask, wash the container and residue with small quantity of 70% ethanol in portions, combine the washings to the same volumetric flask, dilute to volume and shake well for use.

Procedure Inject accurately 10 μl each of the reference solution and the test solution into the column and measure. It contains not less than 4.5 mg of baicalin ($C_{21}H_{18}O_{11}$) per pill, referred to Radix Scutellariae.

Action To clear the lung, release the exterior, resolve phlegm and relieve coughing.

Indications Red complexion, fever, coughing with expectoration of profuse thick phlegm, shortness of breath, or painful throat and hoarseness in children due to affliction from external *wind-cold* or *phlegm-heat* in the *Lung Meridian*.

Usage and dosage 1 pill, twice a day, half pill for children under 3 years of age.

Strength 3 g per pills

Storage Preserve in tightly closed containers.

Erzhi Wan
(二至丸)

Erzhi Pills

Ingredients Fructus Ligustri Lucidi (steamed) 500 g; Herba Ecliptae 500 g.

Procedure Pulverize Fructus Ligustri Lucidi to fine powder and sift. Decoct Herba Ecliptae with water twice for 1 hour each. Combine the decoctions, filter and evaporate the filtrate appropriately. Add 60 g of refined honey and a quantity of water. Mix well with the above powder to make pills and dry.

Description Blackish-brown water-honeyed pills; odour, slight; taste, sweet and bitter.

Identification (1) Microscopical: Epidermal cells of pericarp subpolygonal in surface view, with unevenly thickened anticlinal walls and lumina containing pale brownish substances.
(2) To 0.5 g, in powder, add 30 ml of ether and heat under reflux for 40 minutes. Filter and evaporate the filtrate to dryness. Dissolve the residue in 10 ml of dehydrated ethanol as the test solution. Dissolve oleanolic acid CRS in a quantity of dehydrated ethanol to produce a solution containing 1 mg per ml, used as the reference solution. Carry out the method for thin layer chromatography (Appendix Ⅵ B), using silica gel G containing sodium carboxy methylcellulose as the coating substance and a mixture of chloroform and methanol (40∶1) as the mobile phase. Apply separately 5 μl of each of the two solutions to the plate. After developing and removal of the plate, dry in air, spray with 10% solution of sulfuric acid in ethanol and heat at 105℃ to the spots distinct. The spot in the chromatogram obtained with the test solution corresponds in position and colour to the spot in the chromatogram obtained with the reference solution.

Other requirements Comply with the general requirements for pills (Appendix Ⅰ A), except that the disintegration time is within 2 hours.

Assay Grind 0.5 g, weighed accurately, to fine powder, place into a Soxhelt's extractor, add an appropriate quantity of ethyl acetate and heat under reflux for about 6 hours, recover the ethyl acetate to dryness. Dissolve the residue in ethyl acetate, transfer to a 5 ml volumetric flask, dilute with ethyl acetate to volume and mix well, used as the test solution. Dissolve a quantity of oleanolic acid CRS, weighed accurately, in dehydrated ethanol to produce a reference solution containing 1 mg per ml. Carry out the method for thin layer chromatography (Appendix Ⅵ B), using silica gel G as the coating substance and a mixture of cyclohexane, acetone and ethyl acetate (5∶2∶1) as the mobile phase. Apply accurately to the plate 2 μl of test solution and 1 μl and 4 μl of the reference solution, spotted alternatively. After developing and removal of the plate, dry in air. Spray with a 10% solution of sulfuric acid in ethanol, heat at 110℃ to the spots clear. Cover the plate with a piece of glass of the same size, and fix with tape. Carry out the method for thin layer chromatography (Appendix Ⅵ B thin layer chromatographic scanning method), scan at the wavelength of $\lambda_s = 530$ nm and $\lambda_R = 680$ nm. Determine the integrated values of the test solution and reference solution respectively, and calculated the content.
It contains not less than 8.0 mg of oleanolic acid ($C_{30}H_{48}O_3$) per gram, referred to Fructus Ligustri Lucidi.

Action To nourish the liver and kidney, and replenish *yin* and arrest bleeding.

Indications Dizziness and tinnitus, dryness of the throat and nose, aching pain in the lower back and knees or menorrhagia due to *yin* deficiency in the *liver* and kidney.

Usage and dosage 9 g, twice a day.

Storage Preserve in tightly closed containers.

Extractum Folii Eriobotryae Inspissatum
(枇杷叶膏, Pipaye Gao)

Loquat Leaf Concentrated Decoction

Loquat Leaf Concentrated Decoction is the concentrated decoction prepared from Folium Eriobotryae.

Procedure Decoct Folium Eriobotryae with three quantities of water. Combine the decoctions, filter and concentrate the filtrate to a liquid extract with relative density 1.21-1.25 (80℃). To 100 g of the liquid extract, add 200 g of refined honey or 200 g of sucrose, heat to dissolve, mix well, concentrate to relative density as required.

Description A blackish-brown thick semi-fluid; taste, sweet, slightly astringent.

Relative density 1.42-1.46 (Appendix Ⅰ F).

Other requirements Complies with the general requirments for concentrated decoctions (Appendix Ⅰ F).

Action To clear the lung and relieve *dryness* by moistening, and stop coughing and resolve phlegm.

Indications Dry cough due to *heat* in the lung, expectoration of scanty phlegm and dry throat.

Usage and dosage 9-15 g, twice a day.

Storage Preserve in tightly closed containers, stored in a cool place.

Extractum Leonuri Inspissatum
(益母草膏, Yimucao Gao)

Concentrated Decoction of Motherwort Herb

Concentrated Decoction of Motherwort Herb is the concentrated decoction prepared from Herba Leonuri.

Procedure Cut Herba Leonuri into pieces, decoct with water for two times, 2 hours each, combine the decoctions, filter. Concentrate the filtrate to a thin extract of relative density 1.21-1.25 (80℃). To each 100 g of the thin extract add 200 g of brown sugar, heat to dissolve, mix well and concentrate to the specified relative density.

Description A brownish-black and thick semifluid; odour,

slight; taste, bitter and sweet.

Identification To 10 g, add 20 ml of water, stir well, add dilute hydrochloric acid to adjust to pH 1-2 and centrifuge. Apply the supernatant to a strong acidic cation exchange resin column (0.9 cm in internal diameter and 12 cm in length) packed with sodium type of resin [Na type, 001×7 (732)]. Elute with water to the eluate nearly colourless, discard the water eluate and then elute with 40 ml of 2 mol/L ammonia solution. Combine the ammonia eluate, evaporate to dryness on a water bath. Dissolve the residue in 2 ml of methanol as the test solution. Dissolve stachydrine hydrochloride in methanol to produce a reference solution containing 1 mg per ml. Carry out the method for thin layer chromatography (Appendix Ⅵ B), using silica gel G containing sodium carboxymethylcellulose as the coating substance, and a mixture of *n*-butanol, hydrochloric acid and ethyl acetate (8∶3∶1) as the mobile phase. Apply separately to the plate 4 μl of each of the two solutions. After developing and removal of the plate, dry in air. Spray with a dilute Potassium iodobismuthate TS. A spot in the chromatogram obtained with test solution corresponds in position and colour to the spot in the chromatogram obtained with reference solution.

Relative density 1.10-1.12, diluting 10 g in 20 ml of water (Appendix Ⅶ A).

Other requirements Complies with the general requirements for concentrated decoctions (Appendix Ⅰ F).

Assay Weigh accurately 3 g in beaker, add 10 ml of water, allow to dissolve, adjust the pH value to 1-2 with dilute hydrochloric acid, apply to a strong acidic cation exchange resin column (0.9 cm in internal diameter and 12 cm long) packed with sodium type of resin (732). Elute with water to the eluate nearly colourless, discard the water eluate and then elute with 150 ml of 2 mol/L ammonia solution. Combine the ammonia eluate, evaporate to dryness, dissolve the residue in methanol, transfer to a 10 ml volumetric flask, dilute to volume, mix well, stand, use the supernatant as the test solution. Dissolve stachydrine hydrochloride CRS, dried at 105℃ for 3 hours, weighed accurately, in methanol to produce a solution containing 2 mg per ml as the reference solution. Carry out the method for thin layer chromatography (Appendix Ⅵ B), using silica gel G as the coating substance and a mixture of n-butanol, ethyl acetate and hydrochloric acid (8∶1∶3) as the mobile phase. Apply separately 8 μl of the test solution, 3 μl and 8 μl of the reference solutions to the plate. After developing and removal of the plate, dry in air. Heat at 105℃ for 15minutes, cool. Spray with a mixture of 1% solution of ferric chloride in ethanol and dilute Potassium iodobismuthate Ts (1∶10) to the spots clear, dry in air. Cover with a same size glass to the plate and fix with adhesive tape. Carry out the method of thin layer chromatography (Appendix Ⅵ B, thin layer chromatographic scanning method), scan at the wavelength $\lambda_s = 510$ nm. Measure the integration value of absorbency of the test solution and the reference solution and calculate.

It contains not less than 3.6 mg of stachydrine hydrochloride ($C_7H_{13}NO_2 \cdot HCl$) per gram.

Action To promote blood circulation to regulate menstruation.

Indications Menstrual disorders due to stagnated blood and prolonged lochiorrhea with manifestations of hypomenorrhea, continuous dripping of menstrual blood and long-term bleeding after childbirth; postpartum subinvoution of the uterus with above symptoms.

Usage and dosage 10 g, 1-2 times a day.

Precaution Contraindicated for pregnant women.

Strength (1) 125 g per bottle (2) 250 g per bottle

Storage Preserve in tightly closed containers, stored in a cool place.

Extractum Prunellae Inspissatum (夏枯草膏, Xiakucao Gao)

Common Selfheal Concentrated Decoction

Common Selfheal Concentrated Decoction is the concentrated decoction prepared from Spica Prunellae.

Procedure Decoct 2500 g of Spica Prunellae with water for 3 times, 2 hours each, combine the decoctions, filter, concentrate the filtrate to a liquid extract with a relative density of 1.21-1.25 (80-85℃). To each 100 g of the liquid extract add 200 g of refined honey or 200 g of sucrose, heat to dissolve, mix well, concentrate to the specified relative density, and make 1000 g.

Description A blackish-brown and thick semifluid; taste, sweet, slightly astringent.

Identification Place 2 g of the extract, add 25 ml of water to dissolve, adjust the pH value to 2-3 with dilute hydrochloric acid TS, and filter. Extract the filter with three 25-ml quantities of ether, combine the ether extract and evaporate to dryness. Dissolve the residue in 1 ml of dehydrated ethanol as the test solution. Decoct 0.5 g of Spica Prunellae reference drug with 25 ml of water for 30 minutes; cool, filter. Use the filter to prepare the reference drug solution in the same manner as described in the test solution preparation, beginning at the words "adjust the pH value to 2-3 with dilute hydrochloric acid TS". Carry out the method for thin layer chromatography (Appendix Ⅵ B), using silica gel G as the coating substance and a mixture of chloroform, methanol, glacial acetic acid, and water (7∶2∶0.5∶0.3) as the mobile phase. Apply separately 5 μl of each of the test solution and the reference drug solution to the plate. After developing and removal of the plate, dry in air. Spray with 2% ferric chloride in ethanol and heat to the spots clear. The spots in the chromatogram obtained with the test solution correspond in position and colour to the spots obtained with the reference drug solution.

Relative density 1.40-1.46 (Appendix Ⅰ F).

Other requirements Comply with the general requirements for concentrated decoctions (Appendix Ⅰ F).

Action To clear *fire*, dissipate nodulation and reduce swelling.

Indications Headache, dizziness, scrofula, or mastitis due to *internal fire* accumulation; goiter, tuberculous lymphadenitis and hyperplasia of mammary glands with above symptoms.

Usage and dosage 9 g; twice a day.

Storage Preserve in tightly closed containers, stored in a cool place.

Fangfeng Tongsheng Wan
(防风通圣丸)

Fangfeng Tongsheng Pills

Ingredients Radix Saposhnikoviae 50 g; Spica Schizonepetae 25 g; Herba Menthae 50 g; Herba Ephedrae 50 g; Radix et Rhizoma Rhei 50 g; Natrii Sulfas 50 g; Fructus Gardeniae 25 g; Talcum 300 g; Radix Platycodonis 100 g; Gypsum Fibrosum 100 g; Rhizoma Chuanxiong 50 g; Radix Angelicae Sinensis 50 g; Radix Paeoniae Alba 50 g; Radix Scutellariae 100 g; Fructus Forsythiae 50 g; Radix et Rhizoma Glycyrrhizae 200 g; Rhizoma Atractylodis Macrocephalae (stir-baked) 25 g.

Procedure Pulverize the above ingredients, except Natrii Sulfas and Talcum, to fine powder, sift and mix well. Dissolve Natrii Sulfas in an appropriate quantity of water, filter and make pills with the filtrate. Pulverize Talcum to very fine powder, coat the pills, polish and dry.

Description White to greyish-white bright watered pills; taste, sweet, salty and slightly bitter.

Identification (1) Microscopical: Vittae containing golden-yellow secretion, about 30 μm in diameter. Epidermal cells of calyx pale yellow, with sinuous anticlinal walls. Stomata characteristic, guard cells dumbbell-shaped in lateral view. Clusters of calcium oxalate large, 60-140 μm in diameter. Irregular plate crystals colourless, with straight striations. Clusters of calcium oxalate 18-32 μm in diameter, occurring in parenchymatous cells, often arranged in rows, or several in one cell. Phloem fibres pale yellow, fusiform, with thickened walls and fine pit-canals. Fibre bundles surrounded with parenchymatous cells containing prisms of calcium oxalate, forming crystal fibres. Needle crystals of calcium oxalate fine, 10-32 μm in long, irregularly filling in parenchymatous cells. Stone cells containing crystals of pericarp subrounded or polygonal, 17-31μm in diameter, with thickened walls and containing prisms of calcium oxalate. Endocarp fibres, the upper and lower layers crossed alternately, fibres short fusiform.

(2) Place 4 g, in fine powder, in a crucible and ignite to complete carbonization, cool, add 5 ml of water to the residue, stir and filter. To 2 ml of the filtrate, add ammoina TS until the solution becomes neutral and add 1 ml of zinc-uranyl acetate TS; a yellow precipitate is produced. To another 2 ml of the filtrate, add 1 drop of barium chloride TS; a white precipitate is produced, which is insoluble in hydrochloric acid or nitric acid.

(3) Place 15 g, in powder, in a Soxhlet's extractor, moisten with 10 ml of dilute sulfuric acid, add 40 ml of chloroform and heat under reflux for 8 hours. separate the chloroform layer and evaporate to dryness. Dissolve the residue with sodium hydroxide solution (0.1 mol/L), stir and filter. Acidify the filtrate with dilute hydrochloric acid to pH 2-3 and extract again with an appropriate quantity of chloroform. Concentrate the extract to about 2 ml, used as the test solution. Prepare a solution with 0.5 g of Radix et Rhizoma Rhei reference drug as the reference drug solution in the same manner. Carry out the method for thin layer chromatography (Appendix Ⅵ B), using silica gel G as the coating substance and the upper layer of a mixture of benzene, ethyl formate, methanol, formic acid, and water (6:2:0.4:0.1:1) as mobile phase. Apply separately 20 μl of each of the two solutions to the plate. After developing and removal of the plate, dry in air. Develop again, using the upper layer of a mixture of hexane, petroleum ether (60-90℃), ethyl formate, formic acid, and water (6:2:3:0.2:1) as the mobile phase. After developing and removal of the plate, dry in air. The yellow spots in the chromatogram obtained with the test solution correspond in position and colour to the spots in the chromatogram obtined with the reference drug solution. The colour of the spots turns to red on exposure to ammonia vapour.

Other requirements Comply with the general requirements for pills (Appendix Ⅰ A).

Action To release the exterior and promote bowels movement, and clear *heat* and relieve *toxicity*.

Indications Aversion to cold, high fever, headache, dry throat, concentrated urine, constipation, scrofula at the initial stage, rubella and exudative sores in the condition of exterior *cold* and interior *heat* and the exterior and interior excess syndrome.

Usage and dosage 6 g, twice a day.

Precaution Be cautious about pregnant women.

Strength 1 g per 20 pills

Storage Preserve in well closed containers, protected from moisture.

Fei'er Wan
(肥儿丸)

Fei'er Pills

Ingredients Semen Myristica (simmered) 50 g; Radix Aucklandiae 20 g; Massa Medicata Fermentata (stir-baked) 100 g; Fructus Hordei Germinatus (stir-baked) 50 g; Rhizoma Picrorhizae 100 g; Semen Arecae 50 g; Semen Quisqualis 100 g.

Procedure Pulverize the above seven ingredients to fine powder, sift and mix well. To each 100 g of powder add 100-130 g of refined honey to make big honeyed pills.

Description Blackish-brown big honeyed pills; taste, slightly sweet and bitter.

Identification (1) Microscopical: Epidermal cells in longitudinal rows, frequently one long cell alternately joined to two short cells, the longer cells with thickened, sinuous, and lignified walls. Fatty oil drops numerous, add chloral hydrate TS, after heating gradually forming sphaeraphides crystalized. Epidermal cells of testa yellow or brown, polygonal, walls thin and folded with reticulate cells underneath. Bi-spiral vessels 14-17 μm in diameter with walls about 5 μm thick. Fragments of endosperm cells colourless, walls relatively thick, with many large subrounded pits.

(2) Heat under reflux 15 g of the pills, cut into pieces and triturated with 10 g of kieselguhr, in 3 ml of ammonia TS, 50 ml of chloroform on a water bath for 1 hour and filter. To the filtrate, add 5 ml of dilute hydrochloric acid, 20 ml of water, shake, separate the acidic aqueous layer, adjust to pH 8-9 with strong ammonia TS. Extract with two 10-ml, quantities of chloroform. Combine the chloroform extracts, evaporate to dryness. Dissolve the residue in 0.5 ml of methanol as the test solution. Prepare a solution with 1 g of Semen Arecae reference drug as the reference drug solution in the same manner. Carry out the method for thin layer chromatography (Appendix Ⅵ B), using silica gel G as the coating substance prepared with 1% solution of sodium hydroxide and the lower layer of a mixture of chloroform, ethyl acetate, methanol, and water (2:4:2:1) as the mobile phase. Apply separately 10 μl of each of the two

solutions to the plate. After developing and removal of the plate, dry in air, spray with potassium iodobis-muthate TS. The spots in the chromatogram obtained with the test solution correspond in position and colour to the spots in the chromatogram obtained with the reference drug solution.
(3) Cut 24 g of the pills into pieces, grind with 12 g of kieselguhr. Add 80 ml of ether, ultrasonicate for 5 minutes, filter, evaporate the filtrate to dryness. Dissolve the residue in 1 ml of methanol, centrifuge and use the supernatant as the test solution. Prepare a solution of 0.5 g of Radix Aucklandiae reference drug and 20 ml of ether in the same manner as the reference drug solution. Carry out the method for thin layer chromatography (Appendix Ⅵ B), using silica gel G as the coating substance and a mixture of *n*-hexane and ethyl acetate (10∶3) as the mobile phase. Apply separately 5 μl of each of the test solution and the reference solution to the plate. After developing and removal of the plate, dry in air, spray with 5% solution of vanillin in sulfuric acid. The spots in the chromatogram obtained with the test solution correspond in position and colour to the spots in chromatogram obtained with the reference drug solution.
(4) Dissolve Vanillic acid CRS and cinnamic acid CRS in methanol separately to prepare a solution containing 1 mg per ml as the reference solution. Carry out the method for thin layer chromatography (Appendix Ⅵ B), using silica gel GF_{254} as the coating substance and a mixture of *n*-hexane, ether and glacial acetic acid (5∶5∶0.1) as the mobile phase. Apply separately 5 μl of each of the test solution obtained under the test of Identification (3) and the above two reference solutions to the plate. After developing and removal of the plate, dry in air. Examine under ultraviolet light at 254 nm, the fluorescent spots in the chromatogram obtained with the test solution correspond in position and colour to the fluorescent spots in chromatogram obtained with the reference drug solution.

Other requirements Comply with the general requirements for pills (Appendix Ⅰ A).

Action To invigorate the spleen to expel retained food and intestinal parasites.

Indications Child indigestion, or abdominal pain due to parasitic malnutrition, emaciation and sallow complexion, loss of appetite, abdominal bloating and diarrhea.

Usage and dosage 1-2 pills, 1-2 times a day; appropriate reduction of the dosage for children under 3 years of age.

Strength 3 g per pill

Storage Preserve in tightly closed containers.

Fenghan Kesou Keli
(风寒咳嗽颗粒)

Fenghan Kesou Granules

Ingredients Pericarpium Citri Reticulatae 100 g; Rhizoma Zingiberis Recens 150 g; Rhizoma Pinelliae Preparatum 150 g; Pericarpium Citri Reticulatae Viride 100 g; Semen Armeniacae Amarum 100 g; Herba Ephedrae 100 g; Folium Perillae 100 g; Fructus Schisandrae Chinensis 100 g; Cortex Mori 100 g; Radix Glycyrrhize preparata 100 g.

Procedure Distill volatile oil of Pericarpium Citri Reticulatae, Pericarpium Citri Reticulatae Viride. Collect the aqueous extract solution in another container, Decoct the drug residue and the other 8 ingredients three times, 1.5 hours for each time. Combine the decoctions and filter. Combine the filtrate and the above water solution and concentrate to a thick extract with a relative density of 1.38-1.40 (60℃). Mix 1 thick extract, 3 sucrose, and 1 dextrin together thoroughly. Make granules and dry. Add volatile oil of Pericarpium Citri Reticulatae and Pericarpium Citri Reticulatae Viride. Mix thoroughly, make up to 1000 g.

Description Pale brown granules; odour, aromatic; taste, sweet, slightly bitter.

Identification (1) To 5 g of the granules, dissolve in 20 ml of water, extract with two 20-ml quantities of ether, discard the ether layer, and extract the water layer with two 30-ml quantities of ethyl acetate, and combine the ethyl acetate extracts. Evaporate the ethyl acetate extracts to dryness, and dissolve the residue in 1 ml of methanol as the test solution. Dissolve hesperidine CRS in methanol to produce a solution containing 1 mg per ml as the reference solution. Carry out the method for thin layer chromatography (Appendix Ⅵ B), using silica gel G mixed with sodium hydroxide as the coating substance and a mixture of ethyl acetate, ethanol and water (20∶10∶1) as the mobile phase. Apply separately 5 μl of each of the test solution and the reference solution to the plate. After developing about 3 cm, remove the plate, dry it in air, and use a mixture of toluene, ethyl acetate, formic acid and water (20∶10∶1∶1) as the mobile phase, develop again about 8 cm, remove the plate, and dry in air. Spray with aluminium chloride TS, and examine under ultraviolet light at 365 nm. The fluorescent spot in the chromatogram obtained with test solution corresponds in position and colour to the spot in the chromatogram obtained with the reference solution.
(2) To 10 g of the granules, add 10 ml of water, 0.5 ml of concentrated ammonia TS, and 20 ml of chloroform. Ultrasonicate for 20 minutes, allow to stand, and separate the chloroform layer. Evaporate to dryness on a water bath, and dissolve the residue in 2 ml of methanol as the test solution. Dissolve ephedrine hydrochloride CRS in methanol to produce a reference solution containing 1 mg per ml. Carry out the method for thin layer chromatography (Appendix Ⅵ B), using silica gel G as the coating substance, and a mixture of chloroform, methanol and concentrated ammonia TS (4∶1∶0.1) as the mobile phase. Apply separately 6 μl of each of the test solution and the reference solution to the plate. After developing and removal of the plate, dry in air. Spray with ninhydrin TS, heat at 105℃ to the spots distinct. The spot in the chromatogram obtained with the test solution corresponds in position and colour to the spot in the chromatogram obtained with the reference solution.

Other requirements Comply with the general requirements for medicinal granules (Appendix Ⅰ C).

Assay Carry out the method for high performance liquid chromatography (Appendix Ⅵ D).

Chromatographic system and system suitability Use octadecylsilane bonded silica gel as the stationary phase, and a mixture of methanol and water (1∶1) as the mobile phase. As detector a spectrophotometer set at 254 nm. The number of theoretical plates of the column is not less than 3000, calculated with the reference to the peak of ephedrine hydrochloride.

Reference solution Weigh accurately 15 mg of ephedrine hydrochloride CRS, place in a 50 ml volumetric flask, dissolve in water and dilute to volume, and mix well. Measure accurately 5 ml of the solution, transfer to a 100 ml volumetric flask, add water to volume, and mix well. Measure accurately 10 ml of the solution, transfer to a 25 ml volumetric flask. Add 1 ml of periodic acid solution (0.25 g→10 ml) and 2.5 ml of 0.25 mol/L sodium hydroxide, and

mix well. Allow to stand for 30 min, add 0.5 mol/L solution of hydrochloric acid to adjust to pH 7, then add methanol to volume, and mix well to produce a solution containing 6 μg per ml.

Test solution Weigh accurately 3 g of the content obtained under the test of packing variation, pulverized to fine powder, place in a round-ground flask, add 120 ml of 5 mol/L solution of sodium hydroxide, stir well, add 7.5 g of sodium chloride, ultrasonicate for 30 minutes (power 250 W, frequency 50 kHz), add 50 ml of water, and distill, collect about 95 ml of the distillate in a 100 ml of volumetric flask previously added 5 ml of 0.5 mol/L hydrochloric acid, add water to volume, shake well, measure accurately 10 ml of the solution to a 25 ml of volumetric flask, process with the same manner as described under *Reference solution*, beginning at the words "add 1 ml of periodic acid" to "add methanol to volume", stir well and filter. Discard the initial filtrate, and use the successive filtrate as the test solution.

Procedure Inject accurately 20 μl of each of the reference solution and the test solution into the column respectively and calculate the content.

It contains not less than 2.0 mg of ephedrine hydrochloride ($C_{10}H_{15}NO \cdot HCl$) per bag referred to Herba Ephedrae.

Action To disperse *lung-qi* and *cold*, expel phlegm and relieve coughing.

Indications Coughing and shortness of breath due to affliction from external *wind-cold* and failure of *lung-qi* to disperse with manifestations of headache, stuffy nose, coughing with expectoration of much phlegm, and constriction in the chest and shortness of breath.

Usage and dosage 5 g, twice a day, taken with boiled water.

Precaution Be cautious about patients with dry cough caused by *yin* deficiency.

Strength 5 g per bag

Storage Preserve in tightly closed containers.

Fengliaoxing Fengshi Dieda Yaojiu (冯了性风湿跌打药酒)

Fengliaoxing Fengshi Dieda Wine

Ingredients Caulis Erycibes 2500 g; Ramulus Cinnamomi 75 g; Herba Ephedrae 93.8 g; Rhizoma et Radix Notopterygii 7.5 g; Radix Angelicae Sinensis 7.5 g; Rhizoma Chuanxiong 7.5 g; Radix Angelicae Dahuricae 7.5 g; Fructus Psoraleae 7.5 g; Olibanum 7.5 g; Fructus Gleditsiae Abnormalis 7.5 g; Pericarpium Citri Reticulatae 33.1 g; Rhizoma Atractylodis 7.5 g; Cortex Magnoliae Officinalis 7.5 g; Rhizoma Cyperi 7.5 g; Radix Aucklandiae 7.5 g; Fructus Aurantii 50 g; Rhizoma Atractylodis Macrocephalae 7.5 g; Rhizoma Dioscoreae 7.5 g; Rhizoma Polygonati 20 g; Semen Cuscutae 7.5 g; Fructus Foeniculi 7.5 g; Semen Armeniacae Amarum 7.5 g; Rhizoma Alismatis 7.5 g; Faeces Trogopterori 7.5 g; Feculae Bombycis 16.2 g; Cortex Moutan 7.5 g; Myrrha 7.5 g.

Procedure Mix well the above ingredients, except Olibanum, Faeces Trogopterori, Radix Aucklandiae, Myrrha, Herba Ephedrae, Ramulus Cinnamomi, Radix Angelicae Dahuricae, Fructus Foeniculi, Rhizoma et Radix Notopterygii and Fructus Gleditsiae Abnormalis, steam for 2 hours. Take out and allow to cool, combine with the other ten ingredients in a container, add 10000 g of white rice wine, well stopper, macerate for 30-40 days and filter.

Description A brownish-yellow to reddish-brown liquid; odour, aromatic; taste, slightly bitter and sweet.

Identification (1) Evaporate 10 ml to dryness, dissolve the residue in 10 ml of dehydrated ethanol and filter. Evaporate 1 ml of the filtrate to dryness, to the residue add 1 ml of water, a turbid solution is produced, which clarifies on shaking with 1 drop of sodium hydroxide TS, and then becomes turbid again on adding 1 drop of hydrochloric acid.

(2) Use the wine as the test solution. Heat under reflux 1 g of Caulis Erycibes reference drug with 10 ml of dehydrated ethanol for 30 minutes, filter, use the filtrate as the reference drug solution. Carry out the method for thin layer chromatography (Appendix Ⅵ B), using silica gel G as the coating substance and a mixture of benzene, acetone and formic acid (16 : 4 : 0.3) as the mobile phase. Apply separately 10 μl of each of the two solutions to the plate. After developing and removal of the plate, dry in air, and examine under ultraviolet light at 365 nm. The fluorescent spots in the chromatogram obtained with the test solution correspond in position and colour to the spots in the chromatogram obtained with the reference drug solution. Spray with sodium hydroxide TS, the fluorescent intensity of the spots becomes stronger.

(3) Concentrate 30 ml to 2 ml, add 10 ml of ether and 1 ml of strong ammonia TS, stopper closely and allow to stand for 2 hours with constant shaking. Separate the ether layer, add 1 drop of hydrochloric acid, evaporate ether, add 2 ml of methanol, filter, and use the filtrate as the test solution. Dissolve ephedrine hydrochloride CRS in methanol to produce a solution containing 1 mg per ml as the reference solution. Carry out the method for thin layer chromatography (Appendix Ⅵ B), using silica gel G as the coating substance and a mixture of chloroform, methanol and strong ammonia TS (20:3:0.5) as the mobile phase. Apply separately 10 μl of each of the two solutions to the plate. After developing and removal of the plate, dry in air, spray with nihydrin TS and heat at 105℃ for about 10 minutes. The spot in the chromatogram obtained with the test solution corresponds in position and colour to the spot in the chromatogram obtained with the reference solution.

Ethanol content 35 per cent-45 per cent (Appendix Ⅸ M).

Total solid Measure accurately 25 ml, in a tared evaporating dish, heated at 105℃ to a constant weight, evaporate to dryness on a water bath and heat at 105℃ to a constant weight. The residue remained should not be less than 1.2 per cent.

Other requirements Complies with the general requirements for medicinal wine (Appendix Ⅰ M).

Action To expel *wind* and *dampness*, and promote blood circulation to kill pain.

Indications Wind, cold, damp athralgia, numbness of hands and feet, aching pain of the lower back and legs; traumatic injuries, and pain due to stagnation of *qi* and blood.

Usage and dosage 10-15 ml, 2-3 times a day; appropriate quantity for topical application; for swollen, painful black bruise, some fresh ginger is crushed and stir-baked and mixed with some wine and applied topically.

Precaution It is forbidden to prescribe to pregnant women or rubbed with it into the abdomen of pregnant women.

Storage Preserve in tightly closed containers, stored in a cool place.

Fengshi Gutong Jiaonang
(风湿骨痛胶囊)

Fengshi Gutong Capsules

Ingredients Radix Aconiti Praeparata; Radix Aconiti Kusnezoffii Praeparata; Flos Carthami; Radix et Rhizoma Glycyrrhizae; Fructus Chaenomelis; Fructus Mume; Herba Ephedrae.

Procedure Pulverize Radix Aconiti Praeparata, Radix Aconiti Kusnezoffii Praeparata and Radix Glycyrrhizae to fine powder respectively, sift and mix thoroughly. Decoct the other four ingredients with water twice, 2 hours each time, combine the decoctions and filter. Concentrate the filtrate to a thick extract, add the above fine powder, mix thoroughly, dry, pulverize to fine powder, pack 1000 capsules.

Description Hard capsules with yellowish-brown powder; taste, slightly bitter and sour.

Identification (1) Microscopical: Stone cells rectangular or subsquare with slightly thickened walls; Fibre bundles surrounded by parenchymatous cells containing prisms of calcium oxalate, forming crystal fibre.
(2) Heat under reflux 5 g of the content, moistened with 0.5 ml of concentrated ammonia TS, with 50 ml of chloroform for 2 times, 2 hours each time, filter, and combine the filtrates. Recover solvent to dryness, dissolve the residue in 1 ml of methanol as the test solution. Dissolve ephedrine hydrochloride CRS in methanol to produce a solution containing 1 mg per ml as the reference solution. Carry out the method for thin layer chromatography (Appendix Ⅵ B), using silica gel G as the coating substance and a mixture of chloroform, methanol and concentrated ammonia TS (4∶1∶0.1) as the mobile phase. Apply separately 5 μl of each of the test solution and the reference solution to the plate. After developing and removal of the plate, dry in air. Spray with ninhydrin TS and heat at 105℃ for several minutes. The red spot in the chromatogram obtained with the test solution corresponds in position and colour to the spot in the chromatogram obtained with the reference solution.

Other requirements Comply with the general requirements for capsules (Appendix Ⅰ L).

Assay *Reference solution* Dissolve 10 mg of aconitine CRS, dried to the constant weight at 105℃ and accurately weighed, in chloroform in a 100 ml volumetric flask, dilute to volume, and mix well (containing 0.1 mg of aconitine per ml).

Preparation of standard calibration Transfer separately 1,2,3,4 and 5 ml of the reference solution, accurately measured, in separatoring funnels, add accurately chloroform to 20 ml in order. Add accurately 10 ml of pH 3.0 buffer solution (dissolve 0.15 g of dehydrated sodium acetate in water, add 5.6 ml of glacial acetic acid, dilute with water to 500 ml, mix well and make any necessary correction with pH meter) and 2 ml of 0.1% solution of bromcresol green (dissolve 0.2 g of bromcresol green in 3.2 ml of 0.05 mol/L solution of sodium hydroxide, dilute with water to 200 ml and mix well), shake strongly for 5 minutes, and allow to stand for 20 minutes. Separate the chloroform layer and filter through a dry filter paper. Carry out the method for ultraviolet spectrophotometry and colourimetry (Appendix Ⅴ A), using the corresponding solution as the blank, measure the absorbance at 412 nm respectively. Use the absorbance as the ordinate and the concentration as the abscissa, plot the standard calibration.

Procedure Weigh accurately 1 g of the finely powdered content, obtained under the test of packing variation, in a conical flask with stopper, add accurately 25 ml of a mixture of ether, chloroform, dehydrated ethanol (16∶8∶1) and 1.5 ml of ammonia TS, shake thoroughly, weigh, extract on a high speed oscillator for 3 times, 2 minutes each time, allow to stand overnight, weigh again and replenish the loss of weight with the above mixture, mix well on a high speed oscillator for 2 minutes, allow to stand. Transfer accurately 5 ml of the supernatant to a separating funnel, add 5 ml of ether, and extract with four 10-ml quantities of 0.05 mol/L sulfuric acid solution, collect the sulfuric acid extract, filter and combine the filtrates in another separating funnel. Add 4 ml of concentrated ammonia TS, mix well, and extract with four 10-ml quantities of chloroform, collect the chloroform extract and filter. Combine the filtrates, recover the solvent to dryness, and heat the residue at 105℃ for 1 hour, take out and allow to cool. Dissolve the residue with chloroform in portions to a 25 ml volumetric flask, dilute to volume and mix well. Transfer accurately 20 ml of the solution in a separating funnel, carry out the method described under the preparation of standard calibration, beginning at the words "add accurately 10 ml of buffer solution of pH 3.0", measure the absorbance, read out the content of aconitine (μg) from standard curve and calculate.
It contains not less than 0.25 mg and not more than 0.80 mg of total alkaloids per capsule, calculated as aconitine ($C_{34}H_{47}NO_{11}$).

Action To warm the meridians to disperse *cold*, and dredge meridians to kill pain.

Indications Impediment disease due to *wind-dampness* that blocks the meridians, with manifestations of pain in the lower back, cold pain in the limbs and joints; rheumatic arthritis with above symptoms.

Usage and dosage 2-4 capsules, twice a day.

Precaution Overdosage is forbidden as it contains poisonous ingredients; it is contraindicated for pregnant women.

Strength 0.3 g per capsule

Storage Preserve in well closed containers.

Fengshi Maqian Pian
(风湿马钱片)

Fengshi Maqian Tablets

Ingredients Semen Strychni Pulveratum 125 g; Bimbyx Batryticatus (stir-baking) 19 g; Olibanum (stir-baking) 19 g; Myrrha (stir-baking) 19 g; Sacorpio 19 g; Radix Achyranthis Bidentatae 19 g; Rhizoma Atractylodis 19 g; Herba Ephedrae 19 g; Radix et Rhizoma Glycyrrhize 19 g.

Procedure Pulverize Sacorpio, Olibanum, Myrrha and Bimbyx Batryticatus (baking) into fine powder, carry out the method for percolation described under liquid extracts and extracts (Appendix Ⅰ O), percolate Herba Ephedrae, Rhizoma Atractylodis use 75% ethanol as solvent, collect percolation, recover ethanol and concentrate to a thick extract. Decoct Radix Achyranthis Bidentatae and Radix et Rhizoma Glycyrrhize with water three times, 1-2 hours for each time and filter. Combine the filtrates and concentrate to a thick extract. Combine the above thick extracts and add the fine Semen Strychni Pulveratum and the above powder, and mix thoroughly. Make granules and dry. Make to 1000 tablets.

Description Sugar coated tablets with yellowish-brown core; taste, bitter.

Identification (1) Triturate 3 tablets, removed sugar coat, to fine powder, add 0.5 ml of concentrated ammonia TS and 5 ml of dichloromethane, stopper closely the container. Ultrasonicate for 20 minutes, cool, filter and use the filtrate as the test solution. Dissolve separately strychnine CRS and brucine CRS in dichloromethane to produce a mixture solution containing 2 mg each per ml as the reference solution. Carry out the method for thin layer chromatography (Appendix Ⅵ B), using silica gel G mixed with soldium hydroxide solution (0.2 mol/L) as the coating substance and a mixture of chloroform, cyclohexane and ethanol (3∶1∶1) as the mobile phase. Apply separately 10 μl of the test solution and the reference solution to the plate. After developing and removal of the plate, dry in air, spray with potassium iodobismuthate TS. The spots in the chromatogram obtained with the test solution correspond in position and colour to the spots in the chromatogram obtained with the reference solution.

(2) Triturate 10 tablets, removed sugar coat, to fine powder, add 0.5 ml of concentrated ammonia TS and 10 ml of dichloromethane, stopper closely. Ultrasonicate for 20 min, cool, filter, and use the filtrate as the test solution. Dissolve ephedrine hydrochloride CRS in methanol to produce a solution containing 0.5 mg per ml as the reference solution. Carry out the method for thin layer chromatography (Appendix Ⅵ B), using silica gel G as the coating substance and a mixture of butanol, glacial acetic acid and water (8∶2∶1) as the mobile phase. Apply separately 10 μl of the test solution and the reference solution to the plate. After developing and removal of the plate, dry in air, spray with ninhydrin TS and heat at 105℃ to spot clearly. The spot in the chromatogram obtained with the test solution corresponds in position and colour to the spot in the chromatogram obtained with the reference solution.

Other requirements Comply with the general requirements for tablets (Appendix Ⅰ D).

Assay Triturate 20 tablets, removed sugar coat, to fine powder; weigh accurately a quality of the powder (about 3 tablets in weight) in a stopper conical flask, add accurately 25 ml of chloroform and 1 ml of concentrated ammonia TS, stopper closely, shake gently and weigh. Allow it to stand at room temperature for 24 hours, weigh again, replenish the loss weight with chloroform, shake thoroughly and filter. Discard the initial filtrate, and use the successive filtrate as the test solution. Dissolve strychnine CRS, weighed accurately, in chloroform to produce a solution containing 0.15 mg per ml as the reference solution. Carry out the method for thin layer chromatography (Appendix Ⅵ B), using silica gel GF_{254} as the coating substance and a mixture of toluene, acetone, ethanol, and concentrated ammonia TS (4∶5∶0.6∶0.4) as the mobile phase. Apply separately 10 μl of the test solution, 5 μl and 10 μl of each of the reference solution to the plate, pre-equilibrated in development chamber for 15 min. After developing and removal of the plate, dry in air for 2 hours. Carry out the method for thin layer chromatography (Appendix Ⅵ B, thin layer chromatographic scanning method), scan at wavelength λ_S=254 nm; λ_R=300 nm. Measure the integration values of absorbance both for the test solution and the reference solution respectively. Calculate the content of strychnine in the powder.

It contains not less than 0.65 mg and not more than 1.20 mg of strychnine ($C_{21}H_{22}N_2O_2$) per tablet, referred to the Semen Strychni Pulveratum.

Action To expel *wind* and *dampness*, promote blood circulation to remove stasis, and dredge meridians to kill pain.

Indications Impediment disease due to *wind-dampness* and blood stasis, that block the meridians, with manifestations of pricking or severe pain in joints; rheumatic and rheumatoid arthritis, and sciatica with above symptoms.

Usage and dosage 3-4 tablets, maximum dose: 5 tablets, once a day, taken with warm boiled water before sleeping, 7 days making a course of treatment, in an interval of 2-3 days between two courses.

Precaution Contraindicated for pregnant women; be cautious about aged and debilitated patients or follow doctor's advice.

Storage Preserve in tightly closed containers.

Fenqing Wulin Wan (分清五淋丸)

Fenqing Wulin Pills

Ingredients Caulis Akebiae 80 g; Semen Plantaginis (stir-baked with salt) 40 g; Radix Scutellaris 80 g; Poria 40 g; Polyporus 40 g; Cortex Phellodendri Chinensis 40 g; Radix et Rhizoma Rhei 120 g; Herba Polygoni Avicularis 40 g; Herba Dianthi 40 g; Rhizoma Anemarrhenae 40 g; Rhizoma Alismatis 40 g; Fructus Gardeniae 40 g; Radix et Rhizoma Glycyrrhizae 20 g; Talcum 80 g.

Procedure Pulverize the above ingredients, except Talcum to fine powder, sift and mix well. Make pills with water and dry. Pulverize Talcum to very fine powder, coat the pills with Talcum powder, then polish and dry.

Description White to greyish-white polished watered pills; taste, sweet and bitter.

Identification Microscopical: Irregular branched masses colourless, dissolved in chloral hydrate; hyphae colourless or pale brown, 4-6 μm in diameter. Hyphae sticking into masses, mostly colourless. Prisms of calcium oxalate octahedral, 32-60 μm in diameter. The inner epidermal cells of testa subrectangular in surface view, with slightly sinuous walls, somewhat parqueted in groups of several cells. Bast fibres pale yellow, fusiform, with thickened walls and minute pit-canals. Fibre bundles bright yellow, surrounded by cells containing prisms of calcium oxalate, forming crystal fibres, crystal cells with lignified and thickened walls. Fibre bundles surrounded by parenchymatous cells containing prisms of calcium oxalate, forming crystal fibres. Clusters of calcium oxalate large, 60-140 μm in diameter. Needle crystals of calcium oxalate in bundles or scattered, 26-110 μm long. Fibre bundles surrounded by parenchymatous cells containing clusters of calcium oxalate, forming crystal fibres, crystal cells arranged in rows. Epidermis cells of leaves showing cuticle striations on periclinal walls; stomata anisocytic, with 3 subsidiary cells. Palisade tissue occurring in the upper and lower epidermis. Parenchymatous cells subrounded, with elliptical pits gathered into pit-groups. Anticlinal walls of endodermal cells sinuous, somewhat relatively thick, lignified, with sparse and minute pit-canals. Stone cells of testa yellow or pale brown, mostly broken, when whole, elongated polygonal, rectangular or irregular, with thickened walls and large rounded pits, lumina brownish-red.

Other requirements Comply with the general requirements for pills (Appendix Ⅰ A).

Action To clear *heat* and purge *fire*, and induce urination to relieve stranguria.

Indications Stranguria due to pouring of *damp-heat* with manifestations of dark urine, frequency and urgency of urination and burning pain in the urethra.

Usage and dosage 6 g, 2-3 times a day.

Precaution Be cautious about pregnant women.

Storage Preserve in well closed containers, protected from moisture.

Fubao Keli
(妇宝颗粒)

Fubao Granules

Ingredients Radix Rehmanniae; Caulis Lonicerae Japonicae; Radix Dipsaci (stir-baked with salt); Folium Eucommiae (stir-baked with salt); Radix Ophiopogonis; Fructus Toosendan (stir-baked); Radix Paeoniae Alba (stir-baked with wine); Rhizoma Corydails (processed with vinegar); Radix et Rhizoma Glycyrrhizae; Cacumen Platycladi (stir-baked); Receptaculum Nelumbinis (carbonized); Caulis Sargentodoxae

Procedure Decoct the above twelve ingredients except Rhizoma Corydalis with water twice, 2 hours for each time. Decoct Rhizoma Corydalis individual in the same manner. Combine the decoctions, filter, concentrate the filtrate until its relative density is 1.08-1.18 (60℃). Add ethanol to produce a solution containing 65% of ethanol, stir well, allow to stand for 48 hours. Recover ethanol, concentrate the supernatant liquid to a thick extract with a relative density of 1.33-1.45 (60℃). Add a proper quantity of water, stir well, allow to stand for 24 hours, concentrate the supernatant liquid to a thick extract with a relative density of 1.36-1.41 (60℃), add 485 g of sucrose and a proper quantity of dextrin, make 1000 g of granules. Alternatively, concentrate the supernatant liquid to a thin extract with a relative density of 1.10 (60℃), add 5 g of steviosin and a quantity of dextrin, spray-granulated, make 500 g of granules (without sucrose).

Description Brownish-yellow to brown granules; taste, sweet, slightly bitter or bitter, slightly sweet (without sucrose).

Identification (1) Dissolve 5 g of the granules or 2.5 g of the granules (without sucrose) in 30 ml of water, add 3 ml of hydrochloric acid, heat under reflux for 1 hour, filter, extract by shaking with 25 ml of ether. Evaporate the ether solution to dryness, and dissolve the residue in 2 ml of chlorofrom as the test solution. Prepare a solution of 1 g of Radix Ophiopogonis reference drug in the same manner as the reference drug solution. Carry out the method for thin layer chromatography (Appendix Ⅵ B), using silica gel GF_{254} as the coating substance and the mixture of *n*-hexane and ethyl acetate (1∶1) as the mobile phase. Apply separately 2 μl of the two solutions to the plate. After developing and removal of the plate, dry in air, examine under ultraviolet light at 254 nm. The spots in the chromatogram obtained with the test solution correspond in position and colour to the spots in the chromatogram obtained with the reference drug solution. Spray with 10% sulfuric acid in ethanol, heat at 105℃ for 5 minutes, and examine in daylight. The spots in the chromatogram obtained with the test solution correspond in position and colour to the spots in the chromatogram obtained with the reference drug solution.

(2) To 10 g of the granules or 5 g of the granules (without sucrose), pulverized to fine powder, heat under reflux with 50 ml of 80% of ethanol for 1 hour, filter, evaporate the filtrate to dryness, dissolve the residue in 30 ml of water. Extract with 30 ml of *n*-butanol saturated with water, elute the *n*-butanol solution with 20 ml of ammonia TS, evaporate the *n*-butanol solution to dryness, and dissolve the residue in 2 ml of ethanol as the test solution. Dissolve paeoniflorin CRS in ethanol to produce a solution containing 1 mg per ml as the reference solution. Carry out the method for thin layer chromatography (Appendix Ⅵ B), using silica gel G as the coating substance and the mixture of chloroform, methanol and water (14∶6∶1) as the mobile phase. Apply separately 5 μl of the above two solutions to the plate. After developing and removal of the plate, dry in air. Spray with 5% vanillin in sulfuric acid and heat to the spots clear. The spot in the chromatogram obtained with the test solution corresponds in position and colour to the spot in the chromatogram obtained with the reference solution.

(3) Dissolve tetrahydropalmatine CRS in ethanol to produce a solution containing 0.5 mg per ml as the reference solution. Carry out the method for thin layer chromatography (Appendix Ⅵ B), using silica gel G as the coating substance and the mixture of toluene and acetone (9∶2) as the mobile phase. Apply separately 5 μl of the test solution obtained from the test for Identification (2) and the reference solution to the plate. After developing in a chamber pre-equilibrated with ammonia vapour and removal of the plate, dry in air, fumigate the plate in iodine vapour, examine under ultraviolet light at 365 nm. The spot in the chromatogram obtained with the test solution corresponds in position and colour to the spot in the chromatogram obtained with the reference solution.

Other requirements Comply with the general requirements for granules (Appendix Ⅰ C).

Assay Carry out the method for high performance liquid chromatography (Appendix Ⅵ D)

Chromatographic system and system suitability Use octadecylsilane bonded silica gel as the stationary phase and the mixture of acetonitrile and 0.01 mol/L solution of phosphoric acid (13∶87) as the mobile phase. As detector a spectrophotometer set at 230 nm. The number of theoretical plates for the column is not less than 1500, calculated with the reference to the peak of paeoniflorin.

Reference solution Dissolve a quantity of paeoniflorin CRS, accurately weighed, in methanol to produce a solution containing 0.1 mg per ml as the reference solution.

Test solution Weigh accurately 2 g or 1 g (without sucrose) of the content of the capsules obtained under the test of weight variation, pulverized to fine powder, weighed accurately to a stopper conical flask. Add accurately 20 ml of 50% methanol, shake to dissolve allow to stand overnight, shake well and filter. Discard the initial filtrate, filter the successive filtrate with micropore film (0.45 μm), then discard the initial filtrate, use the successive filtrate as the test solution.

Procedure Inject accurately 5 μl of the reference solution and the test solution into the column and calculate the content.

It contains not less than 8.0 mg of paeoniflorin ($C_{23}H_{28}O_{11}$) per capsule, referred to Radix Paeoniae Alba.

Action To reinforce the kidney and regulate blood circulation, and promote *qi* flow to kill pain.

Indications Leukorrhagia and pain in the lower abdomen due to deficiency in the kidney accompanied with stagnation of blood, with manifestations of weakness and aching in the lower back and knees, distending pain in the lower abdomen; chronic pelvic inflammation and annexitis with above symptoms.

Usage and dosage 20 g or 10 g (without sucrose), twice a day, taken with boiled water.

Strength (1) 10 g per pack
(2) 5 g per pack (without sucrose)

Storage Preserve in tightly closed containers.

Fufang Caoshanhu Hanpian (复方草珊瑚含片)

Compound Caoshanhu Tablets

Ingredients Extractum Herba Sarcandrae; Mentholum; Oleum Menthae Dementholatum.

Procedure Decoct Herba Sarcandrae with water twice, 2 hours for the first time and 1.5 hours for the second time. Combine the decoctions and filter, concentrate the filtrate to a relative density of 1.15 (80℃). Add ethanol to 65%, allow to stand for 24 hours. Filter, recover the ethanol from the filtrate in vacuum, then concentrate to a thin extract with a relative density of 1.24-1.26. Add a quantity of excipients to the Extractum Herba Sarcandrae, make granules, and dry. Mix Oleum Menthae Dementholatum and Mentholum to dissolve, add the mixture to the granuales and mix well, compress into tablets, or coat with film.

Description Pink to brownish-red tablets or film coated tablets. Odour, fragrant; taste, sweet and cool.

Identification (1) To 5 g, add 50 ml of water in a 250 ml round-bottom flask, connect to a volatile oil determination tube, add water through the top of the gratusted tube until the water overflows to flask, add 1 ml of ethyl acetate, then connect to reflux condenser. Heat the flask until boiling, and continue heating for 30 minutes. Allow to stand to room temperature, use the layer of ethyl acetate as the test solution. Dissolve mentholum CRS in ethyl acetate to produce a solution containing 4 mg per ml as the reference solution. Carry out the method for thin layer chromatography (Appendix Ⅵ B), using silica gel G as the coating substance and a mixture of benzene and ethyl acetate (19:1) as the mobile phase. Apply separately 5 μl of each of the above two solutions to the plate. After developing and removal of the plate, dry in air, spray with a mixture of vanillin in sulfuric acid-ethanol (1:4), heat at 105℃ until the spots distinct. The spot in the chromatogram obtained with the test solution corresponds in position and colour to the spot in the chromatogram obtained with the reference solution.
(2) Filter the aqueous solution after extracting volatile oil obtained under Identification (1) through cotton. Extract the filtrate by shaking with ethyl acetate twice, each 25 ml, combine the ethyl acetate extracts and evaporate to dryness. Dissolve the residue in 1 ml of methanol as the test solution. To 2 g of Herba Sarcandrae reference drug, add 50 ml of water, ultrasonicate for 30 minutes, filter, extract the filtrate by shaking with ethyl acetate twice, each 25 ml, combine the ethyl acetate extracts, evaporate to dryness, and dissolve the residue in 1 ml of methanol as the reference drug solution. Dissolve isofraxidin CRS in methanol to prepare a solution containing 0.5 mg per ml as the reference solution. Carry out the method for thin layer chromatography (Appendix Ⅵ B), using silica gel G containing sodium carboxymethylcellulose as the coating substance and a mixture of toluene, ethyl acetate and formic acid (9:4:1) as the mobile phase. Apply separately 4 μl of each of the above three solutions to the plate. After developing and removal of the plate, dry in air, examine under ultraviolet light at 365 nm, the fluorescent spots in the chromatogram obtained with the test solution correspond in position and colour to the spots in the chromatogram obtained with the reference drug solution and the reference solution. The spot, which corresponds to the reference solution, turns to yellow-green on exposure to ammonia vapour for 10 minutes.

Other requirements Comply with the general requirements for tablets except for disintegration test (Appendix Ⅰ D).

Assay Carry out the method for high performance liquid chromatography (Appendix Ⅵ D).

Chromatographic system and system suitability Use octadecylsilane bonded silica gel as the stationary phase and a mixture of acetonitrile and 0.1% phosphoric acid solution (20 : 80) as the mobile phase. The wavelength of the detector is 344 nm. The number of theoretical plates of the column is not less than 1200, calculated with reference to the peak of isofraxidin.

Reference solution Dissolve a quantity of isofraxidin CRS, accurately weighed, in methanol to produce a solution containing 4 μg per ml.

Test solution Pulverize 10 tablets obtained in the test of weight variation, weighed accurately, into fine powder. Weigh accurately about 1 g, add 10 ml of water, ultrasonicate (power 300 W, frequency 25 kHz) for 10 minutes, transfer to a separating funnel, extract by shaking with chloroform five times of each 10 ml, and centrifuge when necessary. Combine the chloroform extracts, recover chloroform to dryness, dissolve the residue in methanol, transfer to a 25 ml volumetric flask, dilute to volume with methanol, and mix well, filter and use the successive filtrate as the test solution.

Procedure Accurately inject 20 μl of each of the reference solution and the test solution, respectively, into the column, and determine the content and calculate.
It contains not less than 40 μg of isofraxidin ($C_{11}H_{10}O_5$) for each small tablet and not less than 0.10 mg for each big tablet, referred to Herba Sarcandrae.

Action To disperse *wind* and clear *heat*, reduce swelling and kill pain and ease the throat.

Indications Inflammation of the throat due to affliction from external *wind-heat* with manifestations of swollen painful throat, hoarseness or aphonia; acute pharyngolaryngitis with above symptoms.

Usage and dosage Suck, 2 small tablets, once per 2 hours, 6 times a day; 1 large tablet, once per hour, 5-6 times a day.

Strength (1) 0.44 g (small tablets)
(2) 1.0 g (large tablets)

Storage Preserve in tightly closed containers.

Fufang Chuanbeijing Pian (复方川贝精片)

Compound Chuanbeijing Tablets

Ingredients A quantity of Extractum Herba Ephedrae (equivalent to 2.1 g of ephedrine hydrochloride); Bulbus Fritillariae Cirrhosae 25 g; Pericarpium Citri Reticulatae 94 g; Radix Platycodonis 94 g; Fructus Schisandrae Chinensis 53 g; Extractum Glycyrrhizae 15 g; Rhizoma Pinelliae Praeparatum 75 g; Radix Polygalae 53 g.

Procedure Decoct a quantity of Herba Ephedrae with water twice, each 2 hours, filter the decoctions, combine the filtrate and concentrate the filtrate in vacuum to a thin extract

with a relative density of 1.40 (50℃), dry and determine quantitatively ephedrine hydrochloride. Pulverize Bulbus Fritillariae Cirrhosae and Rhizoma Pinelliae Preparatum to fine powder, and sift. Distill Pericarpium Citri Reticulatae to get the essential oil, decoct the drug residue with water one time, and filter. Extract Fructus Schisandrae Chinensis, Radix Polygalae and Radix Platycodonis with 65% ethanol under reflux twice, filter, combine the filtrates, recover ethanol, combine with the decoction of Pericarpium Citri Reticulatae, concentrate to a thick extract, mix with Extractum Glycyrrhizae, the above fine powder of Bulbus Fritillariae Cirrhosae and Rhizoma Pinelliae Preparatum and a quantity of excipients, dry and pulverize, mix with Extractum Herba Ephedrae, dry, spray with the essential oil of Pericarpium Citri Reticulatae, mix well and make granules. Compress into 1000 tablets and coat with sugar.

Description Sugar coated tablets with brown core; taste, bitter, slightly pungent.

Identification (1) Microscopical: Raphides of calcium oxalate 32-144 mm long, occurring in mucilage cells or scattered; starch granules broad-ovate or conchoidal, 40-64 μm in diameter, hilum slit-shaped, V-shaped or U-shaped, striations visible.

(2) Pulverize 20 tablets, add 30 ml dehydrated ethanol, ultrasonicate for 30 minutes, filter, recover the ethanol to about 1 ml, add a quantity of neutral alumina, stir well and dry. Apply to the column, previously packed with 10 g of neutral aluminum oxide (200-300 mesh, 15mm in internal diameter), elute with 70 ml of ethanol, collect the eluate and recover the ethanol to dryness. Dissolve the residue in 0.5 ml ethanol as the test solution. Dissolve ephedrine hydrochloride CRS in ethanol to prepare a solution containing 0.4 mg per ml as the reference solution. Carry out the method for thin layer chromatogrophy (Appendix Ⅵ B), using silica gel G, prepared with 2% sodium hydroxide solution, as the coating substance and a mixture of chloroform, methanol and concentrated ammonia TS (40∶7∶1) as the mobile phase. Apply separately 5 μl of each of the above two solutions to the plate. After developing and removal of the plate, dry in air. Spray with ninhydrin TS, heat at 105℃ until spots distinct. The spot in the chromatogram obtained with the test solution corresponds in position and colour to the spot in the chromatogram obtained with the reference solution.

Other requirements Comply with the general requirements for tablets (Appendix Ⅰ D).

Assay Carry out the method for high performance liquid chromatography (Appendix Ⅵ D).

Chromatographic system and system suitability Use octadecylsilane bonded silica gel as the stationary phase and a mixture of methanol and water (1∶1) as the mobile phase. The wavelength of the detector is 254 nm. The number of theoretical plates of the column is not less than 3000, calculated with reference to the peak of ephedrine hydrochloride.

Reference solution Weigh accurately about 12.5 mg of ephedrine hydrochloride CRS to a 100 ml volumetric flask, dissolve and dilute to volume with water, mix well. Transfer accurately 5 ml to a 100 ml volumetric flask, dilute to volume with water, and mix well. Transfer accurately 10 ml to a 25 ml volumetric flask, add 1 ml of 2.5% (g/ml) periodic acid solution and 2.5 ml of 0.25 mol/L sodium hydroxide, mix well, allow to stand for 30 minutes, adjust the pH to neutral with 0.5 mol/L hydrochloride acid, dilute to volume with methanol, mix well, producing a solution containing 2.5 μg of ephedrine hydrochloride per ml as the reference solution.

Test solution Pulverize 20 tablets with coating removed, weighed accurately, into fine powder, weigh accurately about 0.1 g of the fine powder, add 120 ml of a solution of 5 mol/L sodium hydroxide, shake, add 7.5 g of sodium chloride, ultrasonicate for 10 minutes, and distil. Collect the distillate to about 95 ml in a 100 ml volumetric flask containing 5 ml of 0.5 mol/L hydrochloric acid, dilute with water to volume and mix well. Transfer accurately 10 ml to a 25 ml volumetric flask, carry out the method described under the preparation of reference solution, beginning at the words "add 1 ml of periodic acid solution".

Procedure Accurately inject 20 μl of each of the reference solution and the test solution, respectively, into the column and calculate.

It contains not less than 1.4 mg of ephedrine hydrochloride ($C_{10}H_{15}NO \cdot HCl$) for each tablet, referred to Extractum Herba Ephedrinae.

Action To disseminate *lung-qi* and resolve phlegm, and stop coughing and relieve asthma/dyspnea.

Indications Coughing with shortness of breath and constriction in the chest with expectoration of much phlegm due to affliction from external *wind-cold*, and acute or chronic bronchitis with above symptoms.

Usage and dosage 3-6 tablets, 3 times a day; reduce the dosage for children.

Precaution Be cautious about patients with hypertension and heart diseases and pregnant women.

Storage Preserve in tightly closed containers.

Fufang Danshen Diwan (复方丹参滴丸)

Compound Danshen Dripping Pills

Ingredients Radix et Rhizoma Salviae Miltiorrhizae; Radix et Rhizoma Notoginseng; Borneolum Syntheticum.

Procedure Decoct Radix et Rhizoma Salviae Miltiorrhizae and Radix et Rhizoma Notoginseng with water, combine the decoctions, and filter. Concentrate the filtrate, add a quantity of ethanol to precipitate, recover ethanol from the supernatant and concentrate to the thick extract; pulverize Borneolum Syntheticum to the fine powder. Melt an appropriate quantity of polyethylene glycols on heating, add the above thick extract and the fine powder of Borneolum Syntheticum, mix well, drip into cool (refrigerated) liquid paraffin, make dripping pills, or coat with film.

Description Brown dripping pills or film coated dripping pills; odour, fragrant; taste, slightly bitter.

Identification (1) Pulverize 40 pills, add 10 ml of dehydrated ethanol. Ultrasonicate for 10 minutes, filter, and use the filtrate as the test solution. Dissolve a mixture of (±)-borneol and (±)-isoborneol CRS in dehydrated ethanol to prepare a solution containing 1 mg per ml as the reference solution. Carry out the method for thin layer chromatography (Appendix Ⅵ B), using silica gel G as the coating substance and a mixture of cyclohexane and ethyl acetate (17∶3) as the mobile phase. Apply separately 5-10 μl of each of the test solution and the reference solution to the plate. After developing and removal of the plate, dry in air, spray with 1% solution of vanillin in sulfuric acid, heat at 105℃ to the spot distinct. The spot in the chromatogram obtained with the test solution corresponds in position and colour to the spot in chromatogram obtained with the

reference solution.
(2) Dissolve 20 pills in a centrifuge tube in 9 ml of dilute ammonia solution about 40℃ (to 8 ml of concentrated ammonia solution, add water to a volume of 100 ml, mix well) by shaking, centrifuge. Apply the supernatant to a column packed with macroporous resin D101 (0.7 cm in internal diameter, 5 cm long), elute with 15 ml of water, discard the aqueous solution; elute with methanol, discard about 0.4 ml of the eluate, collect about 5 ml of the successive eluate as the test solution. Dissolve notoginsenoside R_1 CRS in methanol to prepare a solution containing 2 mg per ml as the reference solution. Carry out the method for thin layer chromatography (Appendix Ⅵ B), using silica gel G as the coating substance and the upper layer of a mixture of *n*-butanol, ethyl acetate and water (4∶1∶5) as the mobile phase. Apply separately 15 μl of the test solution and 5 μl of the reference solution to the plate. After developing and removal of the plate, dry in air. Spray with 10% solution of sulfuric acid in ethanol, heat at 105℃ for about 10 minutes. The spot in the chromatogram obtained with the test solution corresponds in position and colour to the spot in the chromatogram obtained with the reference solution.
(3) Dissolve 15 pills in a centrifuge tube in 1 ml of water and two drops of dilute hydrochloric acid solution by shaking, add 3 ml of ethyl acetate, shake for 1 minute, centrifuge for 2 minutes, use the supernatant as test solution. Dissolve sodium tanshenol CRS in methanol to prepare a solution containing 1 mg per ml as the reference solution. Carry out the method for thin layer chromatography (Appendix Ⅵ B), using silica gel G as the coating substance and a mixture of chloroform, butanone, acetone and formic acid (25∶10∶4) as the mobile phase. Apply separately 10 μl of the test solution and 2 μl of the reference drug solution to the plate. After developing and removal of the plate, dry in air. After exposure to ammonia vapour for 15 minutes, the pale-yellow spot in the chromatogram obtained with the test solution corresponds in position and colour to the spot in chromatogram obtained with the reference solution. Stand for 30 minutes, examine under ultraviolet light at 365 nm, the fluorescent spot in the chromatogram obtained with the test solution corresponds in position and colour to the fluorescent spot in chromatogram obtained with the reference solution.

Other requirements Comply with the general requirements for dripping pills (Appendix Ⅰ K).

Assay Carry out the method for high performance liquid chromatography (Appendix Ⅵ D)

Chromatographic system and system suitability Use octadecylsilane bonded silica gel as the stationary phase and a mixture of methanol, water and glacial acetic acid (8∶91∶1) as the mobile phase. As detector a spectrophotometer set at 281 nm. The number of theoretical plates of the column is not less than 2000, calculate with the reference to the peak of tanshinol.

Reference solution Dissolve a quantity of sodium tanshinol CRS, accurately weighed, in methanol to produce a solution containing 0.16 mg (equivalent to 0.144 mg of tanshinol) per ml as the reference solution.

Test solution Weigh accurately 12 pills to a 25 ml volumetric flask (destroy the coats of the coated-film pills by press, wash the mortar with a quantity of methanol, combine the washing to the same volumetric flask), add methanol to a volume of about 15 ml. Ultrasonicate (power 50 W, frequency 50 kHz, on a 25℃ water bath) for 10 minutes, allow to stand to room temperature. Dilute with methanol to volume, mix well, centrifuge (2000 rpm) for 5 minutes and use the supernatant as the test solution.

Procedure Inject accurately 5 μl of the reference solution and 5-10 μl of the test solution, respectively, into the column, and calculate the content.
It contains not less than 0.10 mg of tanshinol ($C_9H_{10}O_5$) per pill, referred to Radix et Rhizoma Salviae Miltiorrhizae.

Action To promote blood circulation to resolve stagnated blood and regulate *qi* flow to kill pain.

Indications Impeded flow of *yang-qi* in the chest due to stagnation of *qi* and blood with manifestations of constriction and stabbing pain in the precardium; angina pectoris in coronary heart disease with above symptoms.

Usage and dosage Taken orally or sublingually, 10 pills, 3 times a day, 4 weeks making one course of treatment; or follow doctor's advice.

Precaution Be cautious about pregnant women.

Strength 25 mg per pill; 27 mg per pill (film-coated pill)

Storage Preserve in tightly closed containers.

Fufang Danshen Pian
(复方丹参片)

Compound Salvia Tablets

Ingredients Radix et Rhizoma Salviae Miltiorrhizae 450 g; Radix et Rhizoma Notoginseng 141 g; Borneolum Syntheticum 8 g.

Procedure Heat under reflux Radix et Rhizoma Salviae Miltiorrhizae with ethanol for 1.5 hours, filter the extracts, recover ethanol and concentrate to an appropriate quantity. Heat under reflux the residue with 50% ethanol for 1.5 hours, filter the extracts. recover ethanol and concentrate to an appropriate quantity. Decoct the residue with water for 2 hours, filter and concentrate to an appropriate quantity. Pulverize Radix et Rhizoma Notoginseng to fine power, mix with the above concentrate and an appropriate quantity of excipient, make granules and dry. Grind Borneolum Syntheticum to fine powder, mix with the above granules to make 1000 tablets, coat with sugar or film.

Description Sugar or film coated tablets with brown to dark brown core; odour, aromatic; taste, slightly bitter.

Identification (1) Microscopical: Fragments of resin canals containing yellow secretions.
(2) Pulverize 5 tablets, removal of the sugar coat, add 10 ml of ether, ultrasonicate for 5 minutes, filter and reserve the drug residue. Evaporate the filtrate to dryness, dissolve the residue in 2 ml of ethyl acetate as the test solution. Disslove tanshinone ⅡA CRS and (±)-borneol and (±)-isoborneol CRS separately in ethyl acetate to produce two solutions, each containing 0.5 mg per ml as the reference solutions. Carry out the method for thin layer chromatography (Appendix Ⅵ B), using silica gel G as the coating substance and a mixture of benzene and ethyl acetate (19∶1) as the mobile phase. Apply separately 4 μl of each of the three solutions to the plate. After developing and removal of the plate, dry in air. The spot in the chromatogram obtained with the test solution corresponds in position and colour to the spot in the chromatogram obtained with the tanshinone ⅡA reference solution. Spray with a 1% solution of vanillin in sulfuric acid and heat at 110℃ for several minutes. The spots in the chromatogram obtained with the test solution correspond in position and colour to the spots in the chromatogram obtained with the (±)-borneol and (±)-isoborneol reference solution.
(3) To the drug residue obtained in the test for Identification

(2), add 25 ml of methanol, heat under reflux for 15 minutes, cool and filter. Evaporate the filtrate to dryness, dissolve the residue in 25 ml water by gentle heat, add 25 ml of *n*-butanol saturated with water, shake for extract. Wash the extract solution with 25 ml of ammonia TS, discard the ammonia solution and wash with two 25-ml quantities of water saturated with *n*-butanol. Evaporate the *n*-butanol extract to dryness, dissolve the residue in 1 ml of methanol as the test solution. Prepare a solution of 0.5 g of Radix et Rhizoma Notoginseng reference drug in the same manner as the reference drug solution. Dissolve notoginsenoside R_1 CRS, ginsenoside Rb_1 CRS and ginsenoside Rg_1 CRS separately in methanol to prepare three reference solutions each containing 1 mg per ml. Carry out the method for thin layer chromatography (Appendix Ⅵ B), using silica gel G as the coating substance and the lower layer of a mixture of chloroform, methanol and water (13∶7∶2), kept below 10℃, as the mobile phase. Apply separately 1 μl of each of the above five solutions to the plate. After developing and removal of the plate, dry in air. Spray with sulfuric acid solution in ethanol (1→10) and heat at 110℃ to the spots distinct. The spots in the chromatogram obtained with the test solution correspond in position and colour to the spots in the chromatogram obtained with the reference solutions and the reference drug solution.

Other requirements Comply with the general requirements for tablets (Appendix Ⅰ D).

Assay ***Tanshinone*** **ⅡA** Carry out the method for high performance liquid chromatography (Appendix Ⅵ D).

Chromatographic system and system suitability Use octadecylsilane bonded silica gel as the stationary phase and a mixture of methanol and water (73∶27) as the mobile phase. As detector a spectrophotometer set at 270 nm. The number of theoretical plates of the column is not less than 2000, calculated with the reference to the peak of tanshinone ⅡA.

Reference solution Dissolve a quantity of tanshinone ⅡA CRS, weighed accurately, in methand in an amber volumetric flask to prepare a solution containing 40 μg per ml as the reference solution.

Test solution Take 10 tablets, uncoated if necessary, weigh accurately and grind to fine powder. Place 1 g of the fine powder, weighed accurately, to a stopper conical flask add 25 ml of methanol, tightly stopper and weigh accurately. Ultrasonicate (power, 250 W; frequency, 33 kHz) for 15 minutes, allow to cool, weigh accurately again, make up the loss with methanol, stir well and filter, and use the successive filtrate (preserved in amber coloured glass bottle) as the test solution.

Procedure Inject accurately 10 μl of each of the reference solution and the test solution into the column, and calculate the content.

It contains not less than 0.20 mg of tanshinone ⅡA ($C_{19}H_{18}O_3$) per tablet, referred to Radix et Rhizoma Salviae Miltiorrhizae.

Salvianolic acid B Carry out the method for high performance liquid chromatography (Appendix Ⅵ D)

Chromatographic system and system suitability Use octadecylsilane bonded silica gel as the stationary phase and a mixture of acetonitril, methanol, formic acid and water (10∶30∶1∶59) as the mobile phase. As detector a spectrophotometer set at 286 nm. The number of theoretical plates of the column is not less than 3000, calculated with the reference to the peak of salvianolic acid B.

Reference solution Dissolve a quantity of salvianolic acid B CRS, accurately weighed, in water to prepare a solution containing 60 μg per ml as the reference solution.

Test solution Weigh accurately 10 tablets, removal of the sugar coat and pulverized to fine power. Weigh accurately 0.15 g of the power to a 50 ml volumetric flask, add a quantity of water. Ultrasonicate (power, 300 W; frequency, 50 kHz) for 30 minutes, allow to stand to room temperature. Dilute with water to volume, mix well, centrifuge, and use the supernatant as the test solution.

Procedure Inject accurately 10 μl of each of the reference solution and the test solution into the column, and calculate the content.

It contains not less than 5.0 mg of salvianolic acid B ($C_{36}H_{30}O_{16}$) per tablet, referred to Radix et Rhizoma Salviae Miltiorrhizae.

Action To promote blood circulation to resolve stagnated blood and regulate *qi* flow to kill pain.

Indications Impeded flow of *yang-qi* in the chest due to stagnation of *qi* and blood with manifestations of constriction and stabbing pain in the precardium; angina pectoris in coronary heart disease with above symptoms.

Usage and dosage 3 tablets, 3 times a day.

Precaution Be cautious about pregnant women.

Storage Preserve in tightly closed containers.

Fufang Fufangteng Heji (复方扶芳藤合剂)

Compound Herba Euonymi Mixture

Ingredients Herba Euonymi; Radix Astragali; Radix et Rhizoma Ginseng Rubra.

Procedure Heat Radix et Rhizoma Ginseng Rubra under a reflux condenser with 65% ethanol for three times, 2 hours for each time respectively. Combine the ethanol solutions, filter and keep the filtrate for further use. Decoct the above drug residue for three times, 1.5 hours for each time. Filter the decoctions, combine the filtrate and concentrate the filtrate to a thin extract with a relative density of 1.06 (60℃). Cool to ambient temperature, store at low temperature for more than 48 hours, filter and keep the filtrate for further use. Decoct Herba Euonymi and Radix Astragali twice, 2 hours for each time. Filter the decoctions, Combine the filtrate and concentrate the filtrate to a thin extract with a relative density of 1.14 (60℃), cool to ambient temperature, add two volumes of ethanol, stir well, stand more than 48 hours, filter, combine the filtrate with the ethanol solution of Radix et Rhizoma Ginseng Rubra, recover ethanol, add a quantity of water and mix well. Add a quantity of a 50% solution of albumen, stir well, boil and filter. Combine the filtrate with the decoction of Radix et Rhizoma Ginseng Rubra, add a quantity of sucrose and boil to dissolve. Add a quantity of sodium benzoate, vanillin and water, boil and filter. Add water to the regulated volume, stir well and pack.

Description A clear, reddish-brown liquid; odour, aromatic; taste, sweet and slightly bitter.

Identification (1) Extract 30 ml with 30 ml of chloroform, separate the upper layer and extract with 40 ml of ethyl acetate. Separate the ethyl acetate solution, evaporate to dryness, dissolve the residue in 10 ml of ethyl acetate, filter and evaporate the filtrate to dryness. Dissolve the residue in 0.5 ml of ethyl acetate to prepare a solution as the test solution. Decoct 10 g of Herba Euonymi reference drug with water twice, 40 minutes for the first time, 30 minutes for the second time. Combine the decoctions, filter and

concentrate the filtrate to about 20 ml. Add 40 ml of ethanol to the concentrate, stir well, stand for 2 hours and filter. Recover ethanol of the filtrate until no odour of ethanol, extract with 15 ml of chloroform, separate the upper layer, extract with 20 ml of ethyl acetate, separate and evaporate the ethyl acetate solution to dryness. Dissolve the residue in 0.5 ml of ethyl acetate to prepare a solution as the reference drug solution. Carry out the method for thin layer chromatography (Appendix Ⅵ B), using silica gel GF_{254} mixed with sodium carboxymethylcellulose as the coating substance and the upper layer of a mixture of toluene, ethyl acetate, formic acid and water (20∶10∶1∶1) as the mobile phase. Apply separately 10 μl of each of the two solutions to the plate. After developing and removal of the plate, dry in air, expose to iodine vapour for about 10 minutes and examine immediately under ultraviolet light at 254 nm. The principal spots in the chromatogram obtained with the test solution correspond in position and colour to the spots in the chromatogram obtained with the reference drug solution.

(2) To 0.8 g of Radix et Rhizoma Ginseng reference drug add 40 ml of chloroform, heat under reflux on a water bath for 1 hour, cool to ambient temperature and filter. Remove chloroform from the drug residue in air, moisten with 0.5 ml of water, add 10 ml of *n*-butanol saturated with water, ultrasonicate for 30 minutes and stand still. Separate the supernatant liquid, add 3 volumes of ammonia TS, mix well, stand to separate and evaporate the upper layer to dryness. Dissolve the residue in 2 ml of methanol to prepare a solution as the test solution. Carry out the method for thin layer chromatography (Appendix Ⅵ B), using silica gel G mixed with sodium carboxymethylcellulose as the coating substance and a mixture of 10 volumes of the upper layer of a mixture of *n*-butanol, ethyl acetate and water (4∶1∶5) and 1 volume of methanol as the mobile phase. Apply separately 4 μl of each of the test solution obtained under the test of Assay and the reference drug solution to the plate. After developing in a chamber saturated with ammonia vapour and removal of the plate, dry in air. Spray with a 10% solution of sulfuric acid in ethanol, heat at 105℃ until the spots appear and examine under ultraviolet light at 365 nm. Three or more than three principal fluorescent spots in the chromatogram obtained with the test solution correspond in position and colour to the spots in the chromatogram obtained with the reference drug solution.

Relative density Not less than 1.2 (Appendix Ⅶ A).

pH value 4.6-6.0 (Appendix Ⅷ G).

Other requirements Complies with the general requirements for mixtures (Appendix Ⅰ J).

Assay Extract 20 ml of the mixture, measured accurately, with two 30 ml quantities of chloroform by shaking. Separate and combine the upper layers. Extract with successive quantities of 30, 20, 20, 20 and 20 ml of *n*-butanol saturated with water. Wash the combined *n*-butanol solution with two quantities of 100 and 80 ml of ammonia TS and evaporate the *n*-butanol solution to dryness. Dissolve the residue in 5 ml of 10% ethanol, apply to a column packed with macroporous resin D101 (1.5 cm in internal diameter, 12 cm long), elute successively with 50 ml of water and 30 ml of 40% ethanol and discard the eluates. Then elute with 50 ml of 70% ethanol and evaporate the eluate to dryness. Dissolve the residue in methanol, transfer to a 2 ml volumetric flask, dilute with methanol to volume, mix well and use the solution as the test solution. Dissolve a quantity of astragaloside Ⅳ CRS, weighed accurately, in methanol to produce a solution containing 1 mg per ml as the reference solution. Carry out the method for thin layer chromatography (Appendix Ⅵ B), using silica gel G mixed with sodium carboxymethylcellulose as the coating substance and a mixture of 10 volumes of the upper layer of a mixture of *n*-butanol, ethyl acetate and water (4∶1∶5) and 1 volume of methanol as the mobile phase. Apply accurately 4 μl of the test solution, 2 μl and 6 μl of the reference solution to the plate. After developing in a chamber saturated with ammonia vapour and allowing the solvent front to ascend more than 16 cm above the line of application, remove the plate and dry in air. Spray with a 10% solution of sulfuric acid in ethanol, heat at 105℃ for about 7 minutes to visualize the spots clearly and cool. Cover the plate with a glass plate of the same size and fix up with adhesive plaster. Carry out the method for thin layer chromatography (Appendix Ⅵ B, thin layer chromatographic scanning method), scan at wavelength of $\lambda_S = 530$ nm and $\lambda_R = 700$ nm, measure the integrated values of absorbance from the test solution and the reference solution, and calculate the content.

It contains not less than 50 μg of astragaloside Ⅳ ($C_{41}H_{68}O_{14}$) per phial, referred to Radix Astragali.

Action To replenish *qi* and enrich blood, and invigorate the spleen and nourish the heart.

Indications Insufficiency of *qi* and blood and deficiency in the heart and spleen, with manifestations of shortness of breath and constriction in the chest, disinclination to talk due to a deficiency of qi, lassitude, spontaneous sweating, palpitation and amnesia, insomnia and dreamfulness, lusterless complexion, poor appetite, distension and fullness in the abdomen, loose stools, pale or puffy tongue with teeth-prints, thready and weak pulse; neurasthenia, leukopenia with above symptoma.

Usage and dosage 15 ml, twice a day.

Precaution Contraindicated for children under one year old and patients with fever due to affliction from exogenous pathogenic factors.

Strength (1) 15 ml per phial (2) 120 ml per bottle

Storage Preserve in tightly closed container.

Fufang Guazijin Keli
(复方瓜子金颗粒)

Fufang Guazijin Granules

Ingredients Herba Polygalae Japonicae 150 g; Folium Isatidis 350 g; Flos Chrysanthemi Indici 200; Spora Lygodii 250 g; Herba Hedyotidis 250 g; Herba Violae 200 g.

Procedure Decoct the six ingredients with water for two times, 1.5 hours for each, filter the decoction, combine the filtrate, concentrate in vacuum to a quantity. Add a quantity of sucrose and dextrin, make granules, dry, and make 1000 g or 700 g. Or add a quantity of dextrin and 0.75 g of stevioside, make granules, dry, and make 250 g.

Description Brown to black brown granules; taste, sweet, slightly bitter; or taste slightly bitter (without sucrose).

Identification (1) Heat under reflux 20 g (10 g or 20 g per pack), 14 g (7 g per pack) or 5 g (5 g per pack) of the granules. ground to fine powder, with 50 ml of chloroform for 1 hour, filter, concentrate the filtrate to about 1 ml as the test solution. Dissolve a quantity of indirubin CRS with chloroform to produce a solution containing 1 mg per ml as the reference solution. Carry out the method for thin layer chromatography (Appendix Ⅵ B), using silica gel G as the coating substance, and a mixture of *n*-hexane, chloroform and acetone (5∶4∶1) as the mobile phase. Apply separately 20 μl of the test solution and 5 μl of the reference solution to the plate. After developing and removal of the plate, dry in

air and examine immediately. The spot in the chromatogram obtained with the test solution corresponds in position and colour to the spot in the chromatogram obtained with the reference solution.

(2) Ultrasonicate 20 g (10 g or 20 g per pack), 14 g (7 g per pack) or 5 g (5 g per pack) of the granules, ground to fine powder, with 50 ml of methanol for 30 minutes, filter, and evaporate the filtrate to dryness. Dissolve the residue with 20 ml of water, extract with 20 ml of ethyl acetate, separate the ethyl acetate layer, evaporate to dryness, dissolve the residue with 1 ml of methanol as the test solution. Dissolve a quantity of aesculetin CRS with methanol to produce a solution containing 1 mg per ml as the reference solution. Carry out the method for thin layer chromatography (Appendix Ⅵ B), using silica gel G as the coating substance, and a mixture of toluene, ethyl acetate and formic acid (5 : 3 : 1) as the mobile phase. Apply separately 5 μl of each of the above two solutions to the plate. After developing and removal of the plate, dry in air, spray with 2% solution of ferric chloride in ethanol, and heat to spots distinct. The spot in the chromatogram obtained with the test solution corresponds in position and colour to the spot in the chromatogram obtained with the reference solution.

Other requirements Comply with the general requirements for granules (Appendix Ⅰ C).

Assay Carry out the method for high performance liquid chromatography (Appendix Ⅵ D).

Chromatographic system and system suitability Use octadecylsilane bonded silica gel as the stationary phase and a mixture of acetonitrile and 0.1% solution of phosphoric acid (8 : 92) as the mobile phase. As detector a spectrophotometer set at 350 nm. The number of theoretical plates of the column is not less than 2000, calculated with the reference to the peak of aesculetin.

Reference solution Dissolve a quantity of aesculetin CRS, weighed accurately, with 50% methanol to produce a solution containing 10 μg per ml.

Test solution Pulverize the granules, obtained under the test of weight variation, to fine powder, weigh accurately 4 g (10 g or 20 g per pack), 2.8 g (7 g per pack) or 1 g (5 g per pack) in a stopper conical flask, add accurately 25 ml of methanol, and weigh. Heat under reflux for 1 hour, stand to cool, weigh again, replenish the lost weight with methanol, and mix thoroughly. Filter, measure accurately 5 ml of the successive filtrate in a 10 ml volumetric flask, dilute with water to volume, mix well, filter and use the filtrate as the test solution.

Procedure Inject accurately 20 μl of each of the reference solution and the test solution into the column, and calculate the content.

It contains not less than (1) 1.2 mg (10 g or 7 g per pack), (2) 2.4 mg (20 g or 5 g per pack) of aesculetin ($C_9H_6O_4$) per pack, referred to Herba Violae.

Action To clear *heat* and ease the throat, dissipate nodulation and kill pain and expel phlegm and relieve cough.

Indications Red swollen throat, pharyngalgia, fever and coughing due to invasion of the lung by *wind-heat* or abundant *phlegm-heat* in the lung; acute pharyngitis, acute attack of chronic pharyngitis and upper respiratory tract infection with above symptoms.

Usage and dosage (1) 20 g (10 g, 20 g per pack) (2) 14 g (7 g per pack) (3) 5 g (5 g per pack); 3 times a day; taken with boiled water, reduce the dosage for children.

Strength (1) 10 g (equalling to 14 g of crude drug)
(2) 20 (equalling to 28 g of crude drug)
(3) 7 g (equalling to 14 g of crude drug)
(4) 5 g (equalling to 28 g of crude drug)

Storage Preserve in tightly closed container.

Fufang Huangliansu Pian (复方黄连素片)

Compound Berberine Hydrochloride Tablets

Ingredients Berberine Hydrochloride 30 g; Radix Aucklandiae 116 g; Fructus Evodiae 40 g; Radix Paeoniae Alba 162 g.

Procedure Pulverize 80 g of Radix Aucklandiae and Fructus Evodiae to fine powder and sift. Mix the coarse powder, not passed through No. 5 sieve, with Radix Paeoniae Alba and 36 g of Radix Aucklandiae. Carry out the method for percolation as described under liquid extracts and extracts (Appendix Ⅰ O), percolate the above mixture, using 70% ethanol as the solvent. Recover ethanol from the percolate and concentrate to a thick extract. Mix the extract with the above fine powder, dry and pulverize. Add Berberine Hydrochloride to the powder, make granules, allow to dry, make to 1000 tablets and coat with sugar.

Description Sugar coated tablets with brownish-yellow to brown core; taste, bitter and slightly pungent.

Identification (1) Triturate 4 tablets, removed sugar coats, to fine powder, add 20 ml of water, boil for 5 minutes and filter while hot. Allow the filtrate to cool, adjust to pH 9-10 with ammonia TS, extract with 10 ml of chloroform and evaporate the extract to dryness. Dissolve the residue in 1 ml of a mixture of hydrochloric acid and ethanol (1:100) as the test solution. Prepare a solution of 0.5 g of Fructus Evodiae reference drug add 10 ml of ethanol, ultrasonicate for 10 minutes, filter and use the filtrate as the reference drug solution. Dissolve berberine hydrochloride CRS in ethanol to produce a solution containing 0.1 mg per ml as the reference solution. Carry out the method for thin layer chromatography (Appendix Ⅵ B), using silica gel G as the coating substance and a mixture of *n*-butanol, glacial acetic acid and water (5 : 1 : 1) as the mobile phase. Apply separately 2 μl of each of the three solutions to the plate. After developing and removal of the plate, dry in air and examine under ultraviolet light at 365 nm. The fluorescent spots in the chromatogram obtained with the test solution correspond in position and colour to the spots in the chromatograms obtained with the reference drug solution and the reference solution.

(2) Triturate 10 tablets, removed the sugar coats, to fine powder, add 20 ml of chloroform, ultrasonicate for 20 minutes, filter and evaporate the filtrate to about 2 ml as the test solution. Prepare a solution of 0.5 g of Radix Aucklandiae reference drug and 10 ml of chloroform in the same manner as the reference drug solution. Carry out the method for thin layer chromatography (Appendix Ⅵ B), using silica gel G as the coating substance and a mixture of *n*-hexane and ethyl acetate (9:1) as the mobile phase. Apply separately 3 μl of each of the two solutions to the plate. After developing and removal of the plate, dry in air, spray with a 1% solution of vanillin in sulfuric acid and heat until the spots clear. The spots in the chromatogram obtained with the test solution correspond in position and colour to the spots in the chromatogram obtained with the reference drug solution.

(3) To the drug residue, obtained in the test for Identification (2) and extracted with chloroform, add 30 ml of methanol, heat under reflux for 1 hour, filter, and

evaporate the filtrate to dryness. Dissolve the residue in 20 ml of water, extract with two 30 ml quantities of *n*-butanol saturated with water by shaking, combine the *n*-butanol extracts. Wash the extract solution with two 30 ml quantities of water saturated with *n*-butanol. Evaporate the *n*-butanol extract to dryness, dissolve the residue in 1 ml of ethanol as the test solution. Dissolve paeoniflorin CRS in ethanol to produce a solution containing 2 mg per ml as the reference solution. Carry out the method for thin layer chromatography (Appendix Ⅵ B), using silica gel G as the coating substance and a mixture of chloroform, ethyl acetate, methanol, and formic acid (40∶5∶10∶0.2) as the mobile phase. Apply separately 5 μl of each of the test solution and the reference solution to the plate. After developing and removal of the plate, dry in air, spray with 5% solution of vanillin in sulfuric acid, heat at 105℃ to the spot distinct. The spot in the chromatogram obtained with the test solution corresponds in position and colour to the spot in chromatogram obtained with the reference solution.

Other requirements Comply with the general requirements for tablets (Appendix Ⅰ D).

Assay ***Berberine hydrochloride*** Carry out the method for high performance liquid chromatography (Appendix Ⅵ D).

Chromatographic system and system suitability Use octadecylsilane bonded silica gel as the stationary phase and a mixture of 0.033 mol/L potassium dihydrogen phosphate solution and acetonitrile (60∶40) as the mobile phase. As detector a spectrophotometer set at 265 nm. The number of theoretical plates of the column is not less than 3000, calculated with the reference to the peak of berberine hydrochloride.

Reference solution Weigh accurately 25 mg of berberine hydrochloride CRS, dried previously at 100℃ for 5 hours, dissolve in 150 ml of boiling water in a 250 ml beaker and allow to cool. Add 3 ml of dilute hydrochloric acid TS, stir well and cool to ambient temperature. Transfer the solution to a 250 ml volumetric flask, add water to volume and mix well. Transfer 2 ml of the solution, measured accurately, to a 25 ml volumetric flask, dilute to volume with the mobile phase and shake well (containing 8 μg of berberine hydrochloride per ml).

Test solution Weigh accurately 20 tablets, removed the sugar coats, and triturate to fine powder. Weigh accurately a quantity of the powder, equivalent to about 30 mg of berberine hydrochloride, disintegrate in about 150 ml of boiling water and cool slightly. Add 3 ml of dilute hydrochloric acid TS, stir well and cool to ambient temperature. Transfer the solution to a 250 ml volumetric flask, add water to volume, mix well. Centrifuge (4000 rpm). Transfer 2 ml of the supernatant, measured accurately, to a 25 ml volumetric flask, dilute to volume with the mobile phase and shake well.

Procedure Inject accurately 10 μl of each of the reference solution and the test solution into the column, and calculate the content.

It contains not less than 85.0 per cent and not more than 115.0 per cent of the labelled amount of berberine hydrochloride ($C_{20}H_{17}NO_4 \cdot HCl$) per tablet.

Radix Paeoniae Alba Carry out the method for high performance liquid chromatography (Appendix Ⅵ D)

Chromatographic system and system suitability Use octadecylsilane bonded silica gel as the stationary phase and a mixture of acetonitril and 0.05 mol/L potassium dihydrogen phosphate solution (15∶85) as the mobile phase. As detector a spectrophotometer set at 230 nm. The number of theoretical plates of the column is not less than 2000, calculated with the reference to the peak of paeoniflorin.

Reference solution Dissolve a quantity of paeoniflorin CRS, accurately weighed, in 50% ethanol to produce a solution containing 0.1 mg per ml as the reference solution.

Test solution Weigh accurately 20 tablets, removed from coating and pulverized to fine power and mix well. Place 0.5 g, weighed accurately, to a stopper conical flask, add accurately 25 ml of 50% ethanol, stopper tightly and weigh. Ultrasonicate (power, 250 W; frequency, 33 kHz) for 30 minutes, allow to stand to room temperature and weigh again, replenish the loss of the weight with 50% ethanol, shake thoroughly and filter, use the successive filtrate as the test solution.

Procedure Inject accurately 10 μl of each of the reference solution and the test solution into the column, and calculate the content.

It contains not less than 0.65 mg of paeoniflorin ($C_{23}H_{28}O_{11}$) per tablet, referred to Radix Paeoniae Alba.

Action To clear *heat* and *dampness*, move *qi* to kill pain, and arrest diarrhea and dysentery.

Indications Diarrhea, dysentery with purulent mucus and blood, tenesmus or spouting diarrhea and burning anus due to *damp-heat* in the large intestine; enteritis and dysentery with above symptoms.

Usage and dosage 4 tablets, 3 times a day.

Strength 30 mg of berberine hydrochloride per tablet

Storage Preserve in tightly closed containers.

Fufang Jixueteng Gao
(复方鸡血藤膏)

Compound Kadsura Extract

Ingredients Powder of Caulis Kadsurae decoction 218.75 g; Radix Cyathulae 59.5 g; Radix Dipsaci 53 g; Flos Carthami 5 g; Semen Glycinic Macis 12.5 g; Glutinous Rice Powder 437.5 g; Molasses 300 g.

Procedure Powder of Caulis Kadsurae decoction is prepared as follow: Decoct Caulis Kadsurae with water three times, 4 hours, 3 hours and 2 hours respectively and filter. Concentrate the filtrate to a thick extract, bake to dry, and pulverize to pass through No. 6 sieve. Wash clean Glutinous rice, steam well, bake to dry, and pulverize to pass through No. 6 sieve. Decoct Radix Cyathulae, Radix Dipsaci, Flos Carthami and Semen Glycinis Macis three times with water, combine the decoctions, filter, and concentrate the filtrate to an appropriate quantity. Add the powder of Caulis Kadsurae decoction, Glutinous Rice powder and Molasses, stir well, make to the shape of square mass, dry and produce 1000 g.

Description Black masses of dry extract; odour, aromatic and burnt; taste, astringent, slightly bitter, then slightly sweet.

Identification (1) To 1 g of the powder add 10 ml of water, heat for 10 minutes and filter. Examine the filtrate under ultraviolet light at 365 nm; a bluish fluorescence is produced.

(2) To 1 g of the powder, add 10 ml of methanol, heat on a warm water bath for 20 minutes and filter. To 1 ml of the filtrate add 1 ml of 3% sodium carbonate solution, heat on a water bath for 3 minutes, cool in ice water, and add 1-2 drops of freshly prepared diazotized *p*-nitroaniline TS; a red colour is produced.

Loss on drying Not more than 14 per cent, when dried at 105℃ to constant weight (Appendix Ⅸ G).

Action To promote blood circulation and enrich blood, and to reinforce the kidney.

Indications Menstrual disorders due to blood stagnation in meridians and failure of the kidney to be nourished, with manifestations of delayed menstrual period, scanty menstrual blood with clots, aching of the lower back, beering-down feeling in the lower abdomen, numbness of hands and feet, and aching pain in joints.

Usage and dosage 6-10 g, twice a day, after crushed and stewed in a mixture of equal amount of water and wine.

Precaution Be cautious about pregnant women.

Strength 200 g per box

Storage Preserve in tightly closed containers, store in a cool place.

Fufang Qianzheng Gao (复方牵正膏)

Compound Qianzheng Plaster

Ingredients Rhizoma Typhonii; Pheretima; Scorpio; Bombyx Batryticatus; Rhizoma Chuanxiong; Radix Angelicae Dahuricae; Radix Angelicae Sinensis; Radix Paeoniae Rubra; Radix Saposhnikoviae; Rhizoma Zingiberis Recens; Camphor; Borneolum Syntheticum; Menthol; Thymol.

Procedure Pulverize the above ten ingredients, except Camphor, Borneolum Syntheticum, Menthol and Thymol, to coarse powder, carry out the method for percolation described under liquid extracts and extracts (Appendix Ⅰ O), using 85% ethanol as solvent to macerate and take percolating. Collect the percolate, recover ethanol and concentrate until its relative density is about 1.05, mix well with Camphor, Borneolum Syntheticum, Menthol and Thymol. Add about four folds in weight of plaster base, prepared with rubber, rosin, zinc oxide, vaselin and wool fat, make to plaster, spread on cloth and cut into pieces.

Description Pale brown or pale brownish-green adhesive tape plaster; odour, aromatic.

Identification (1) To 140 cm^2 of the plaster, removed the covering substance, add 50 ml of ethanol, heat under reflux for 30 minutes, cool and filter. Evaporate the filtrate to dryness, dissolve the residue in 2 ml of ethanol as the test solution. Dissolve imperatorin CRS in dehydrated ethanol to produce a solution containing 0.5 mg per ml as the reference solution. Carry out the method for thin layer chromatography (Appendix Ⅵ B), using silica gel G as the coating substance and a mixture of petroleum ether (30-60℃) and ethyl acetate (4∶1) as the mobile phase. Apply separately 20 μl of the test solution and 5 μl of the reference solution to the plate. After developing and removal of the plate, dry in air and examine under ultraviolet light at 365 nm. The fluorescent spot in the chromatogram obtained with the test solution corresponds in position and colour to the spot in the chromatogram obtained with the reference solution.

(2) To 70 cm^2 of the plaster, removed the covering substance, add 30 ml of ethanol, heat under reflux for 30 minutes, cool and filter. Evaporate the filtrate to dryness, dissolve the residue in 2 ml of methanol as the test solution. Dissolve paeoniflorin CRS in dehydrated ethanol to produce a solution containing 0.5 g per ml as the reference solution. Carry out the method for thin layer chromatography (Appendix Ⅵ B), using silica gel G as the coating substance and a mixture of chloroform and methanol (5∶1) as the mobile phase. Apply separately 15 μl of the test solution and 5 μl of the reference solution to the plate. After developing and removal of the plate, dry in air, spray with a solution of vanillin in sulfuric acid and heat at 105℃ for about 5 minutes. The spot in the chromatogram obtained with the test solution corresponds in position and colour to the spot in the chromatogram obtained with the reference solution.

(3) Macerate 70 cm^2 of the plaster, removed the covering substance, in 10 ml of ethanol for 30 minutes, filter and use the filtrate as the test solution. Dissolve separately (±)-borneol and (±)-isoborneol CRS and menthol CRS in chloroform to produce two solutions each containing 2 mg per ml as the reference solutions. Carry out the method for thin layer chromatography (Appendix Ⅵ B), using silica gel G as the coating substance and a mixture of petroleum ether (60-90℃), benzene and ethyl acetate (9∶2∶1) as the mobile phase. Apply separately 5 μl of the test solution and 2 μl of each of the reference solutions to the plate. After developing and removal of the plate, spray with a solution of vanillin in sulfuric acid and heat at 105℃ for about 5-10 minutes. The spots in the chromatogram obtained with the test solution correspond in position and colour to the spots in the chromatogram obtained with the reference solutions.

Extractive in plaster mass To the plaster, use ether as solvent, not less than 1.6 g per 100 cm^2 (Appendix Ⅰ I).

Other requirements Comply with the general requirements for adhesive plasters of cataplasms (Appendix Ⅰ I).

Action To expel *wind* and promote blood circulation, and relax muscles and tendons and activate meridians.

Indications Deviation of the mouth and eye, numbness of muscles, pain of muscles and joints due to invasion of the meridians by pathogenic factors.

Usage and dosage Applied to the selected acupuncture points (wash clean the affected region with wine or warm water).

Precaution Temporarily cease medication on skin sensitivity; avoid catching *wind* and *cold*; it is not prescribed to open wound.

Strength (1) 4 cm×6.5 cm (2) 6.5 cm×10 cm

Storage Preserve in well closed containers, store in a cool and dry place.

Fufang Xianhecao Changyan Jiaonang (复方仙鹤草肠炎胶囊)

Fufang Xianhecao Changyan Capsule

Ingredients Herba Agrimoniae 1250 g; Rhizoma Coptidis 375 g; Radix Inulae 375 g; Periostracum Cicadae 375 g; Rhizoma Acori Tatarinowii 375 g; Radix Platycodis 250 g.

Procedure Distil volatile oil of Radix Inulae and Rhizoma Acori Tatarinowii, decoct the drug residue and other four ingredients with the water solution after distilling volatile oil and water for three times, 1.5 hours for the first time, 1 hour for the second and third. Combine the decoction, filter, concentrate the filtrate to a thick extract of relative density of 1.30-1.35 (25℃), add ethanol to the content of 76% ethanol. Stir thoroughly, stand for 48 hours, filter, and recover ethanol, and concentrate to a quantity. Add a quantity of excipient, make granules, dry, spray volatile oil, keep in a closed container for 2 hours, and make to 1000 capsules.

Description Capsules with contents of brown yellow to

brown granules and powder; taste, bitter, and astringent.

Identification (1) Heat under reflux 0.1 g of the content with 10 ml of methanol for 15 minutes, filter and use the filtrate as the test solution. Dissolve a quantity of berberine hydrochloride CRS in methanol to produce a solution containing 0.5 mg per ml as the reference solution. Carry out the method for thin layer chromatography (Appendix Ⅵ B), using silica gel G as the coating substance and a mixture of isopentyl acetate, dehydrated ethanol and formic acid (7∶1∶2) as the mobile phase. Apply separately 10 μl of the test solution and 5 μl of the reference solution to the plate. After developing and removal of the plate, dry in air, and examine under ultraviolet light at 365 nm. The fluorescent spot in the chromatogram obtained with the test solution corresponds in position and colour to the spot in the chromatogram obtained with the reference solution.
(2) Heat under reflux 2 g of the content with a mixture of a solution of sulfuric acid in ethanol (7→100) and water (1∶3) for 3 hours, stand to cool, and extract with two 20 ml quantities of chloroform. Combine the extract, wash with 30 ml of water, and discard the water solution. Dehydrate chloroform extract with anhydrous sodium sulfate, filter, evaporate the filtrate, and dissolve the residue with 1 ml of methanol as the test solution. Prepare a solution of 1 g of Radix Platycodis reference drug in the same manner as the reference drug solution. Carry out the method for thin layer chromatography (Appendix Ⅵ B), using silica gel G as the coating substance and a mixture of chloroform and ether (1∶1) as the mobile phase. Apply separately 10 μl of each of the test solution and the reference solution to the plate. After developing and removal of the plate, dry in air, spray with 10% solution of sulfuric acid in ethanol and heat at 105℃ to the spots clear. The spots in the chromatogram obtained with the test solution correspond in position and colour to the spots in the chromatogram obtained with the reference drug solution.

Other requirements Comply with the general requirements for capsules (Appendix Ⅰ L).

Assay Carry out the method for high performance liquid chromatography (Appendix Ⅵ D).

Chromatographic system and system suitability Use octadecylsilane bonded silica gel as the stationary phase and a mixture of acetonitrile and 0.033 mol/L solution of potassium dihydrogen phosphate (40∶60) as the mobile phase. As detector a spectrophotometer set at 265 nm. The number of theoretical plates of the column is not less than 3000, calculated with the reference to the peak of berberine hydrochloride.

Reference solution Weigh accurately 10 mg of berberine hydrochloride CRS, dried at 100℃ for 5 hours, in a 50 ml stopper conical flask, dissolve with 60 ml of boiling water, add 1.2 ml of dilute hydrochloric acid, mix well, ultrasonicate for 30 minutes, allow to cool, and transfer to a 100 ml volumetric flask, dilute with water to volume. Measure accurately 2 ml in a 25 ml volumetric flask, dilute with the mobile phase to volume, and mix well (containing 8 μg of berberine hydrochloride per ml).

Test solution Pulverize the contents, obtained under the test of packing variation, to fine powder, weigh accurately 1 g in a stopper conical flask, add 150 ml of boiling water and add 3 ml of dilute hydrochloric acid. Mix thoroughly, ultrasonicate (power, 250 W; frequency, 50 kHz) for 30 minutes, allow to cool, and filter. Transfer the filtrate to a 250 ml volumetric flask, dilute with water to volume, and mix well. Measure accurately 2 ml in a 25 ml volumetric flask, dilute with the mobile phase to volume, and mix well. Filter, and use the successive filtrate as the test solution.

Procedure Inject accurately 10 μl of each of the reference solution and the test solution into the column, and calculate the content.
It contains not less than 8.0 mg of berberine hydrochloride ($C_{20}H_{18}ClNO_4$) per capsule, referred to Rhizoma Coptidis.

Action To clear *heat* and *dampness*, and invigorate the spleen to arrest diarrhea.

Indications Diarrhea due to retention of *damp-heat* in a spleen deficiency syndrome with manifestations of urgent, sticky or loose stools, poor appetite, lassitude and abdominal distension and pain; acute or chronic enteritis with above symptoms.

Usage and dosage 3 capsules, 3 times a day; taken after meals.

Strength 0.4 g per capsule

Storage Preserve in tightly closed container.

Fufang Xianzhuli Ye (复方鲜竹沥液)

Fufang Xianzhuli Mixture

Ingredients Succus Bambusae 400 ml; Herba Houttuyniae 150 g; Rhizoma Pinelliae Recens 25 g; Rhizoma Zingiberis Recens 25 g; Folium Eriobotryae 150 g; Radix Platycodis 75 g; Oleum Menthae Dementholatum 1 ml.

Procedure Squeeze Rhizoma Zingiberis Recens to obtain juice, add ethanol to adjust 65% content of ethanol, stir, and stand for 24 hours. Filter the supernatant, and recover ethanol of the filtrate. Distil Herba Houttuyniae, collect 150 ml of distillation for further use. Decoct the drug residue of Rhizoma Zingiberis Recens and Herba Houttuyniae, Rhizoma Pinelliae Recens, Folium Eriobotryae and Radix Platycodis with water for two times, 1.5 hours for the first time, and 1 hour for the second. Combine the decoction, filter, concentrate the filtrate to about 420 ml, stand for cool, add ethanol to adjust 65% content of ethanol, stir, and stand for 24 hours. Filter, recover ethanol, add Succus Bambusae and 150 g of sucrose, heat to boil for 20 minutes, filter while hot, and stand the filtrate to cool. Add juice of Rhizoma Zingiberis Recens, distillation liquid of Herba Houttuyniae, Oleum Menthae Dementholatum and 3 g of sodium benzoate, stir thoroughly, add water to 1000 ml, and mix well.

Description A yellowish brown to brown colour liquid; odour, fragrant; taste, sweet.

Identification (1) Extract 30 ml of the mixture with two 25 ml quantities of *n*-butanol saturated with water, combine the extract, and evaporate to dryness. Dissolve the residue in 5 ml of water, apply to a column packed with macrosphorous resin D 101 (1 cm in diameter, 12 cm high), wash with 50 ml of water, discard the washing, elute with 50 ml of 30% ethanol, collect the eluate, evaporate to dryness, dissolve the residue with 1 ml of methanol as the test solution. Decoct 1 g of Herba Houttuyniae reference drug with 50 ml of water for 20 minutes, and filter. To the filtrate, prepare a solution in the same manner as the reference drug solution. Carry out the method for thin layer chromatography (Appendix Ⅵ B), using silica gel G as the coating substance and the lower layer of a mixture of chloroform, methanol and water (13∶7∶2), stood below 10℃, as the mobile phase. Apply separately 5 μl of the above two solutions to the plate. After developing and removal of the plate, dry in air, spray with 10% solution of sulfuric acid in ethanol,

heat at 105℃ to spots clear, and examine under ultraviolet light at 365 nm. The main fluorescent spots in the chromatogram obtained with the test solution correspond in position and colour to the spots in the chromatogram obtained with the reference drug solution.

(2) Extract 30 ml of the mixture with two 25 ml quantities of *n*-butanol saturated with water, combine the extract, and wash with 30 ml of ammonia TS. Evaporate *n*-butanol extract to dryness, and dissolve the residue with 0.5 ml of methanol as the test solution. Decoct 0.5 g of Folium Eriobotryae reference drug with 60 ml of water for 30 minutes, and filter. To the filtrate, prepare a solution in the same manner as the reference drug solution. Carry out the method for thin layer chromatography (Appendix Ⅵ B), using silica gel G as the coating substance and the lower layer of a mixture of chloroform, ethyl acetate, formic acid and water (15∶40∶22∶10), stood below 10℃, as the mobile phase. Apply separately 5 μl of the above two solutions to the plate. After developing and removal of the plate, dry in air, spray with 1% solution of vanillin in ethanol, heat to spots clear, and examine under ultraviolet light at 365 nm. The main spots in the chromatogram obtained with the test solution correspond in position and colour to the spots in the chromatogram obtained with the reference drug solution.

(3) Extract 20 ml of the mixture with two 20 ml quantities of *n*-butanol saturated with water, combine the extract evaporate to dryness, and dissolve the residue with 1 ml of methanol as the test solution. Ultrasonicate 0.5 g of Radix Platycodis reference drug with 10 ml of methanol for 15 minutes, filter, evaporate the filtrate to dryness, and dissolve the residue with 2 ml of methanol as the reference drug solution. Carry out the method for thin layer chromatography (Appendix Ⅵ B), using silica gel G as the coating substance and a mixture of chloroform, methanol and formic acid (16∶10∶1) as the mobile phase. Apply separately 2 μl of the above two solutions to the plate. After developing and removal of the plate, dry in air, spray with 10% solution of sulfuric acid in ethanol, and heat at 105℃ to spots clear. The main spots in the chromatogram obtained with the test solution correspond in position and colour to the spots in the chromatogram obtained with the reference drug solution.

Relative density Not less than 1.05 (Appendix Ⅶ A).

pH value 4.8-6.0 (Appendix Ⅶ G).

Other requirements Comply with the general requirements for mixtures (Appendix Ⅰ J).

Assay Carry out the method for gas chromatography (Appendix Ⅵ E).

Chromatographic system and system suitability Use a capillary column of modified polyethylene glycol (PEG)-20M (30 m long, 0.32 mm in internal diameter, 0.25 μm film thickness), column temperature gradient: initial temperature 100℃, increase at 5℃ per minute to 150℃, and then increase at 30℃ per minute to 200℃, split injection, split radio 3∶1. The number of theoretical plates of the column is not less than 50000, calculated with reference to the peak of menthol.

Correction factor Dissolve a quantity of *n*-octadecane, accurately weighed, with cyclohexane to produce a solution containing 1 mg per ml as internal standard solution. Dissolve a quantity of menthol CRS, accurately weighed, with cyclohexane to produce a solution containing 0.2 mg per ml as the reference solution. Measure accurately 5 ml of the reference solution and 1 ml of internal standard solution in a 10 ml of volumetric flask, dilute with cyclohexane to volume and mix well. Inject accurately 2 μl of the solution into the column and calculate the correction factor.

Procedure Measure accurately 50 ml of the mixture in a ground-bottom flask, add 50 ml of water, carry out the method for determination of volatile oil (Appendix Ⅹ D), add water through the top of the apparatus until fills the collector and overflows to the flask, and add 2 ml of cyclohexane, keep boiling gently for 2 hours, stand to cool, separate the layer of cyclohexane, and transfer to a 10 ml of volumetric flask. Wash the collector with 3 ml of cyclohexane, combine the washing to the same flask, add accurately 1 ml of internal standard solution, dilute with cyclohexane to volume, and mix well. Inject 2 μl into the column and calculate the content.

It contains not less than 10 μg of menthol ($C_{10}H_{20}O$) per ml, referred to Oleum Menthae Dementholatum.

Action To clear heat and resolve phlegm, and stop coughing.

Indications Coughing with expectoration of thick yellow phlegm due to *phlegm-heat*.

Usage and dosage 20 ml, 2-3 times a day.

Strength (1) 10 ml (2) 20 ml (3) 30 ml
(4) 100 ml (5) 120 ml per bottle

Storage Preserve in tightly closed container.

Fufang Yuxingcao Pian
(复方鱼腥草片)

Compound Yuxingcao Tablets

Ingredients Herba Houttuyniae 583 g; Radix Scutellariae 150 g; Radix Isatidis 150 g; Fructus Forsythiae 58 g; Flos Lonicerae Japonicae 58 g.

Procedure Pulverize 200 g of Herba Houttuyniae with Fructus Forsythiae and Flos Lonicerae Japonicae to fine powder. Decoct the remainder of Herba Houttuyniae with Radix Scutellariae and Radix Isatidis with water twice, each 2 hours. Combine the decoctions and filter, concentrate the filtrate to a thick extract, add the above fine powder, mix well, dry and pulverize to fine powder. Make granules, dry and make to 1000 tablets, coat with sugar.

Description Sugar coated tablets with brown core; taste, slightly astringent.

Identification (1) Pulverize 25 tablets, removed from coating, macerate with 20 ml of ether for 24 hours, and filter. Wash the residue with two 10-ml quantities of ether, filter and keep the residue for later use. Evaporate the filtrate to dryness at a low temperature, dissolve the residue in 1 ml of dehydrated ethanol as the test solution. Prepare a solution of 5 g of Herba Houttuyniae reference drug and 30 ml of ether in the same manner as the reference drug solution. Carry out the method for thin layer chromatography (Appendix Ⅵ B), using silica gel G as the coating substance and a mixture of petroleum ether (30-60℃) and ethyl acetate (17∶3) as the mobile phase. Apply separately 10 μl of each of the test solution and the reference solution to the plate. After developing and removal of the plate, dry in air. Examine under ultraviolet light at 365 nm. The main fluorescent spots in the chromatogram obtained with the test solution correspond in position and colour to the spots in chromatogram obtained with the reference drug solution.

(2) To the drug residue, extracted with ether under Identification test (1), expel the ether, add 30 ml of ethanol, heat under reflux for 1 hour, cool and filter, and evaporate the filtrate to dryness. Dissolve the residue in a quantity of water, apply to a column previously packed with macroporous resin D101 (1.5 cm in diameter, 12 cm long)

Elute with 100 ml of water, discard the water, elute with 50 ml of 30% ethanol, and collect the eluate to be employed for the test of Identification (3). Then elute with 60 ml of 70% ethanol, collect the eluate, evaporate to dryness, and dissolve the residue in 1 ml of methanol as the test solution. Dissolve forsythin CRS in methanol to produce a solution containing 1 mg per ml as the reference solution. Carry out the method for thin layer chromatography (Appendix Ⅵ B), using silica gel G as the coating substance, and a mixture of chloroform, methanol and formic acid (9∶1∶0.1) as the mobile phase. Apply separately 5-10 μl of each of the two solutions to the plate. After developing and removal of the plate, dry in air. Spray with a solution of 10% sulfuric acid in ethanol, heat at 105℃ for about 5 minutes. The spot in the chromatogram obtained with the test solution corresponds in position and colour to the spot in the chromatogram obtained with the reference solution.

(3) Evaporate the 30% ethanolic eluate obtained under the Identification test (2) to dryness, dissolve the residue in 1 ml of methanol as the test solution. Dissolve chlorogenic acid CRS in methanol to produce a solution containing 1 mg per ml as the reference solution. Carry out the method for thin layer chromatography (Appendix Ⅵ B), using silica gel H mixed with sodium carboxymethylcellulose as the coating substance, and the upper layer of a mixture of butyl acetate, formic acid and water (14∶5∶5) as the mobile phase. Apply separately 2-5 μl of each of the two solutions to the plate. After developing and removal of the plate, dry in air, and examine under ultraviolet light at 365 nm. The fluorescent spot in the chromatogram obtained with the test solution corresponds in position and colour to the spot in the chromatogram obtained with the reference solution.

Assay Carry out the method for high performance liquid chromatography (Appendix Ⅵ D)

Chromatographic system and system suitability Use octadecylsilane bonded silica gel as the stationary phase and a mixture of methanol, water and phosphoric acid (45∶55∶0.2) as the mobile phase. As detector a spectrophotometer set at 315 nm. The number of theoretical plates of the column is not less than 3000, calculated with the reference to the peak of baicalin.

Reference solution Dissolve a quantity of baicalin CRS, accurately weighed, in methanol to produce a solution containing 40 μg per ml as the reference solution.

Test solution Weigh accurately 20 tablets, removed from coating and pulverized to fine power. Place 0.5 g to a 100 ml volumetric flask, add 60 ml of 70% ethanol. Ultrasonicate (power, 250 W; frequency, 33 kHz) for 30 minutes, allow to stand to room temperature. Dilute with 70% ethanol to volume, mix well, centrifuge and use the supernatant as the test solution.

Procedure Inject accurately 10 μl of each of the reference solution and the test solution into the column, and calculate the content.

It contains not less than 2.7 mg of baicalin ($C_{21}H_{18}O_{11}$) per tablet, referred to Radix Scutellariae.

Other requirements Comply with the general requirements for tablets (Appendix Ⅰ D).

Action To clear *heat* and *toxicity*.

Indications Acute inflammation of the throat, acute tonsillitis due to affliction from external *wind-heat* with manifestations of red swollen painful throat acute pharyngitis and acute tonsillitis with above symptoms.

Usage and dosage 4-6 tablets, 3 times a day.

Storage Preserve in tightly closed containers.

Fufang Zaofan Wan
(复方皂矾丸)

Compound Zaofan Pills

Ingredients Melanteritum; Radix Panacis Quinquefolii; Hippocampus; Cortex Cinnamomi; Fructus Jujubae (cored); Semen Juglandis.

Procedure Dry Hippocampus and Fructus Jujubae at 75-80℃, pulverize to fine powder. Crush Semen Juglandis into pieces, and pulverize with the other three ingredients to fine powder, and triturate with the above powder, sift and mix well. To each 100 g of the powder add 50-60 g refined honey to make small honeyed-pills, coat with active charcoal.

Description Brownish-black or bluish-black small honeyed-pills; odour, characteristic; taste, sweet, slightly bitter and pungent.

Identification (1) Microscopical: Epidermal cells of pericarp yellowish-brown or brownish-red, polygonal in surface view, the thickness of cuticle up to 10 μm in sectional view. Striated muscle fibres colourless or pale yellow, with fine and dense transverse striations, alternated between brightness and darkness, straight or slightly waved. Epidermal cells of tesa polygonal, sometimes oblate stomata visible, about 66 μm wide, guard cells broad reniform; fatty oil drops numerous. Stone cells subrounded or subrectangular, 32-88 μm in diameter, walls thin on one side.

(2) To 2 g, in pieces, add 20 ml of water, add 1 drop of dilute hydrochloric acid, shake and filter. The filtrate yields the characteristic reactions of sulfate (Appendix Ⅳ) and ferrous salts (Appendix Ⅳ).

(3) To 9 g, in pieces, grind with 3 g of kieselguhr, transfer to a conical flask with stopper, add 30 ml of ether, tightly stopper. Macerate for 20 minutes, frequently shaking, filter, concentrate the filtrate to about 2 ml as the test solution. Dissolve cinnamaldehyde CRS in ethanol to produce a solution containing 1 mg per ml as the reference solution. Carry out the method for thin layer chromatography (Appendix Ⅵ B), using silica gel G as the coating substance and a mixture of petroleum ether (60-90℃) and ethyl acetate (17∶3) as the mobile phase. Apply separately 2-5 μl of each of the two solutions to the plate. After developing and removal of the plate, dry in air. Spray with dinitrophenyldrazine TS. The spot in the chromatogram obtained with the test solution corresponds in position and colour to the spot in the chromatogram obtained with the reference solution.

(4) To 12 g, in pieces, grind with 4 g of kieselguhr, add 40 ml of 70% ethanol, and heat under reflux for 1 hour. Allow to cool, filter, and evaporate the filtrate on a water bath to dryness. Dissolve the residue in 40 ml of water, transfer to a separating funnel, extract by shaking with three 20-ml quantities of *n*-butanol saturated with water, combine the *n*-butanol extracts, wash with double volumes of ammonia TS one time, then wash with water twice, each 15 ml. Discard the washings, evaporate the *n*-butanol solution in vacuum to dryness, and dissolve the residue in 1 ml of methanol as the test solution. Prepare a solution of 1 g Radix Panacis Quinquefolii reference drug in the same manner as the reference drug solution. Carry out the method for thin layer chromatography (Appendix Ⅵ B), using silica gel G as the coating substance and the lower layer of a mixture of chloroform, ethyl acetate, methanol and water (15∶40∶22∶10), standing at 5-10℃ over 12 hours, as the mobile phase. Apply separately 1-2 μl of each of the two

solution to the plate. After developing in a chamber, pre-equilibrated with mobile phase, at 10-25℃ and less than 60% of relative humidity, and removal the plate, dry under a current of hot air immediately, spray with 10% sulfuric acid in ethanol and heat at 110-120℃ to spots clear. Examine under sunlight and ultraviolet light at 365 nm separately. The spots, examined in sunlight, and the fluorescent spots, examined under ultraviolet light at 365 nm, in the chromatogram obtained with the test solution correspond in position and colour to the spots in the chromatogram obtained with the reference solution.

Water Not more than 17.0% (Appendix Ⅸ H).

Other requirements Comply with the general requirements for pills (Appendix Ⅰ A).

Assay *Reference solution* Weigh accurately 0.4 g of ferrous sulfate CRS to a 100 ml volumetric flask, add 1 ml of sulfuric acid solution (1→20) and 80 ml of water, dilute to volume with water, mix well. Transfer accurately 2 ml to a 100 ml volumetric flask, dilute to volume with water, and mix well (containing 80 μg of ferrous sulfate per ml, prepared before use).

Preparation of standard curve Measure accurately 1,2,4,6,8 ml of the standard solution in 25 ml volumetric flask separately, add water for each to 10 ml, then add 1 ml of 1% hydroxylamine hydrochloride and 1 ml of 0.2% 2,2-dipyridyl in ethanol, mix well, dilute to volume with water, mix well. Carry out the method for ultraviolet spectrophotometry and colourimetry (Appendix Ⅴ A), measure the absorbance at 522 nm, taking the reagent solution as a blank, plot the standard curve, using absorbance as ordinate and concentration as abscissa.

Procedure Cut 30 pills, weighed accurately, into pieces. Weigh accurately 2 g of the pieces to a 500 ml volumetric flask, add 5 ml of sulfuric acid solution (1→20) and 200 ml of water, ultrasonicate to disperse completely, add water to volume, mix well. Filter, discard about 20 ml of the initial filtrate, transfer accurately 10 ml of the successive filtrate to a 100 ml volumetric flask, dilute to volume with water, and mix well. Transfer accurately 5 ml to a 25 ml volumetric flask, carry out the procedure as described under the preparation of standard curve, beginning at the words "add water for each to 10 ml", measure the absorbance, read out the weight of ferrous sulfate in the test solution from the standard curve, and calculate the content.

It contains not less than 30.0 mg of Melanteritum per pill, calculated as ferrous sulfate ($FeSO_4 \cdot 7H_2O$).

Action To warm the kidney and invigorate marrows, replenish *qi* and *yin*, and to promote generation of blood and arrest bleeding.

Indications Aplastic anemia, leucopenia and thrombocytopenia, myelodysplastic syndrome, impairment to marrows, leucopenia caused by radiotherapy or chemotherapy due to a deficiency of *kidney-yang* and insufficient *qi* and blood.

Usage and dosage 7-9 pills, 3 times a day.

Precaution Avoid tea.

Strength 0.2 g per pill

Storage Preserved in well closed containers.

Fuke Fenqing Wan
(妇科分清丸)

Fuke Fenqing Pills

Ingredients Radix Angelicae Sinensis 200 g; Radix Paeoniae Alba 100 g; Radix Chuanxiong 150; Radix Rehmanniae 200 g; Fructus Gardeniae 100 g; Rhizoma Coptidis 50 g; Folium Pyrrosiae 50 g; Spora Lygodii 25 g; Radix et Rhizoma Glycyrrhizae 100 g; Caulis Akebiae 100 g; Talcum 150 g.

Procedure Decoct Folium Pyrrosiae twice with water and filter. Pulverize the other ingredients to fine powder, sift and mix well. Make pills with Folium Pyrrosiae decoction and dry.

Description Yellow watered pills; taste, bitter.

Identification (1) Microscopical: Parenchymatous cells fusiform, walls slightly thickened, and with minute oblique crisscross striations. Parenchyma greyish-brown to blackish-brown, cells mostly shrunken, and each containing a brown nucleus-like mass. Clusters of calcium oxalate 18-32 μm in diameter, occurring in parenchymatous cells, often in rows or several in one cell. Fibre bundles surrounded by parenchymatous cells containing prisms of calcium oxalate, forming crystal fibres. Fibre bundles bright yellow, with slightly thickened and distinctly pitted walls. Stone cells of testa yellow or pale brown, mostly broken, the whole ones elongated polygonal, rectangular or irregular, with thickened and large rounded pitted walls, lumina brownish-red. Spores tetrahedral or triangular conical, 60-80 μm in diameter, with granular sculptures in outer walls.

(2) To 9 g, in fine powder, add 20 ml of 75% ethanol, heat under reflux for 30 minutes, allow to cool, filter and use the filtrate as the test solution. Dissolve geniposide CRS in methanol to produce a solution containing 1 mg per ml as the reference solution. Carry out the method for thin layer chromatography (Appendix Ⅵ B), using silica gel G as the coating substance and a mixture of ethyl acetate, acetone, formic acid and water (5∶5∶1∶1) as the mobile phase. Apply separately 2 μl of each of the two solutions to the plate. After developing and removal of the plate, dry in air. Spray with 10% sulfuric acid in ethanol and heat to spots clear. The spot in the chromatogram obtained with test solution corresponds in position and colour to the spot in the chromatogram obtained with the reference solution.

(3) To 0.5 g of Rhizoma Coptidis reference drug, add 20 ml of methanol, heat under reflux for 15 minutes, allow to cool, filter, use the filtrate as the reference drug solution. Dissolve berberine hydrochloride CRS in methanol to produce a solution containing 1 mg per ml as the reference solution. Carry out the method for thin layer chromatography (Appendix Ⅵ B), using silica gel G as the coating substance and the mixture of benzene, ethyl acetate, methanol, isopropanol and water (20∶10∶5∶5∶1) as the mobile phase. Apply separately 1 μl of each of the test solution obtained under Identification (2), the above reference drug solution and the above reference solution to the plate. After developing in a chamber pre-equilibrated with ammonia vapour and removal of the plate, dry in air and examine under ultraviolet light at 365 nm. The fluorescent spots in the chromatogram obtained with test solution correspond in position and colour to the spots in the chromatogram obtained with reference drug solution and the reference solution.

Other requirements Comply with the general requirements for pills (Appendix Ⅰ A).

Action To clear *heat* and drain *dampness*, and promote blood circulation to kill pian.

Indications Stranguria caused by *heat* in women due to accumulation of *damp-heat* in the *lower-energizer*, with manifestation of frequency and urgency in micturition, oliguria, difficult and painful urination, and concentrated turbid urine.

Usage and dosage 9 g, twice a day.

Precaution Be cautious about pregnancy.

Storage Preserve in well closed containers, protected from moisture.

Fuke Qianjin Pian
(妇科千金片)

Fuke Qianjin Tablets

Ingredients Radix Moghaniae; Radix Rosae Laevigatae; Herba Andrographis; Caulis Mahoniae; Danmianzhen; Radix Angeliae Sinensis; Caulis Spatholobi; Radix Codonopsis.

Procedure Pulverize Herba Andrographis, Radix Codonopsis and Radix Angeliae Sinensis to fine powder, and sift. Decoct Radix Moghaniae and other four ingredients with water twice, 2.5 hours for the first time and 2 hours for the second time. Filter and combine the filtrate to a thin extract with a relative density is 1.08-1.12 (85℃), mix well with the above fine powder and a quantity of adjuvants, make granules, make to 1000 tablets and coat with film or sugar.

Description Sugar or film coated tablets with greyish-brown core; taste, bitter.

Identification (1) To 3 tablets with coating removed, pulverized to powder, add 20 ml of methanol, ultrasonicate for 20 minutes, and filter, evaporate the filtrate to dryness on a water bath, and dissolve the residue in 1 ml of ethanol as the test solution. Prepare a solution of 0.5 g of Radix Angeliae Sinensis reference drug in 20 ml of ethanol, ultrasonicate for 20 minutes, and filter as the reference drug solution. Carry out the method for thin layer chromatography (Appendix Ⅵ B), using silica gel G as the coating substance and the mixture of *n*-hexane and ethyl acetate (9∶1) as the mobile phase. Apply separately 3 μl of the test solution and the reference drug solution to the plate. After developing and removal of the plate, dry in air, and examine under ultraviolet light at 365 nm. The fluorescent spots in the chromatogram obtained with the test solution correspond in position and colour to the fluorescent spots in the chromatogram obtained with the reference drug solution.

(2) To 0.5 g of Herba Andrographis reference drug in 30 ml of ethanol, ultrasonicate for 30 minutes, filter, evaporate the filtrate to about 4 ml as the reference drug solution. Dissolve dehydroandrogrofpholide and andrographolide CRS in ethanol to produce a mixture containing 1 mg of each per ml as the reference solution. Carry out the method for thin layer chromatography (Appendix Ⅵ B), using silica gel GF_{254} as the coating substance and the mixture of chloroform, ethyl acetate and methanol (4∶3∶0.4) as the mobile phase. Apply 3 μl of the test solution obtained under Identification (1) and 4 μl of each of the reference drug solution and the reference solution to the plate. After developing and removal of the plate, dry in air, and examine under ultraviolet light at 254 nm. The spots in the chromatogram obtained with the test solution correspond in position and colour to the spots in the chromatogram obtained with the reference drug solution and the reference solution.

(3) To 5 tablets with coating removed, pulverized to powder, add 30 ml of ethanol, ultrasonicate for 30 minutes, filter, evaporate the filtrate to dryness on a water bath, dissolve the residue in 2 ml of methanol, apply to a column (1-1.5 cm in internal diameter) previously packed with neutral aluminium oxide (100-200 mesh, 10 g), elute with 100 ml of 40% methanol, and collect the eluates. Heat the eluate on a water bath, evaporate to dryness, and dissolve the residue in 2 ml of methanol as the test solution. Prepare a solution of 0.5 g of Radix Codonopsis reference drug in the same manner as the reference drug solution. Carry out the method for thin layer chromatography (Appendix Ⅵ B), using silica gel G as the coating substance and the mixture of *n*-butanol, methanol and water (15∶3∶2) as the mobile phase. Apply separately 2 μl of each of the test solution and the reference solution to the plate. After developing and removal of the plate, dry in air. Spray with 10% sulfuric acid in ethanol, heat at 105℃ to the spots clear. The spots in the chromatogram obtained with the test solution correspond in position and colour to the spots in the chromatogram obtained with the reference drug solution.

Other requirements Comply with the general requirements for tablets (Appendix Ⅰ D).

Assay Carry out the method for high performance liquid chromatography (Appendix Ⅵ D).

Chromatographic system and system suitability Use octadecylsilane bonded silica gel as the stationary phase and the mixture of methanol and water (55∶45) as the mobile phase. As detector a spectrophotometer set at 240 nm. The number of theoretical plates for the column is not less than 2000, calculated with the reference to the peak of dehydroandrographolide.

Reference solution Dissolve a quantity of dehydroandrographolide and andrographolide CRS, accurately weighed, in methanol to produce a mixture containing 35 μg of andrographolide and 40 μg of dehydroandrographolide per ml respectively as the reference solution.

Test solution To 10 tablets with coating removed, weighed accurately, pulverized to fine powder, and weighted accurately 0.3 g of the powder to a stopper conical flask. Add accurately 20 ml of methanol, stopped tightly, weighed accurately, cool macerate for 30 minutes, ultrasonicate (power, 200 W; frequency, 40 kHz) for 30 minutes, allow to cool, weighted accurately again, replenished the lost weight with methanol, mix well and filter. Discard the initial filtrate, and use the successive filtrate as the test solution.

Procedure Inject accurately 5 μl of each of the reference solution and the test solution into the column and calculate the content.

It contains not less than 0.80 mg of total dehydroandrographolide ($C_{20}H_{28}O_4$) and andrographolide ($C_{20}H_{30}O_5$) per tablet, referred to Herba Andrographis.

Action To clear *heat* and *dampness*, and replenish *qi* and resolve stasis.

Indications Leukorrheal disease and abdominal pain due to accumulation of *damp-heat*, with manifestations of leukorrhagia, thick in quality and yellow in colour with foul smell, lower abdominal pain, aching pain in the lumbosacral region, lassitude; chronic pelvic or endometrial inflammation and chronic cervicitis with above symptoms.

Usage and dosage 6 tablets, 3 times a day.

Storage Preserve in tightly closed containers.

Fuke Shiwei Pian
(妇科十味片)

Fuke Shiwei Tablets

Ingredients Rhizoma Cyperi (processed with vinegar) 500 g; Rhizoma Chuanxiong 20 g; Radix Angelicae Sinensis 180 g; Rhizoma Corydalis (processed with vinegar) 40 g; Rhizoma Atractylodes Macrocephalae 28.75 g; Radix et Rhizoma Glycyrrhizae 13.75 g; Fructus Jujubae 100 g; Radix Paeoniae Alba 15 g; Radix Rehmanniae Praeparata 15 g; Radix Paeoniae Rubra 60 g; Calcium Carbonate 65 g.

Procedure Pulverize Rhizoma Cyperi, Rhizoma Corydalis, Radix Paeoniae Alba, Radix Rehmanniae Praeparata, Calcium carbonate and 126 g of Radix Angelica Sinensis to fine powders. Decoct Radix et Rhizoma Glycyrrhizae and Fructus Jujubae three times, combine the decoctions, and filter. Extract the remains of the Radix Angelicae Sinensis, Rhizoma Atractylodes Macrocephalae, Fructus Jujubae and Rhizoma Chuanxiong with 70% ethanol under reflux twice, filter and combine the filtrates. Combine the above two filtrates and concentrate in vacuum to a thick extract with a relative density of 1.35-1.40 (50℃). Mix well with the above fine powder, dry, pulverize to fine powder, add syrup and starch to make granules, dry, and make to 3000 tablets.

Description Yellowish-brown tablets; taste bitter and slightly sweet.

Identification (1) Microscopical: Secretary cells subrounded, containing pale yellowish-brown to redish-brown secretion, surrounded by radially arranged cells. Parenchymatous cells fusiform, walls slightly thickened, with very fine oblique crisscross striations.

(2) Grind 10 tablets to fine powder, macerate in 20 ml of ether for 1 hour, with constantly shaking, filter and evaporate the filtrate to dryness. Dissolve the residue in 0.5 ml of ethyl acetate as the test solution. Dissolve α-cyperone CRS in ethyl acetate to produce a solution containing 1 mg per ml as the reference solution. Carry out the method for thin layer chromatography (Appendix Ⅵ B) using silica gel GF_{254} as the coating substance and a mixture of *n*-hexane and ethyl acetate (17:3) as the mobile phase. Apply separately 5 μl of each of the two solutions to the plate. After developing and removal of the plate, dry in air, and examine under ultraviolet light at 254 nm. The spot in the chromatogram obtained with the test solution corresponds in position and colour to the spot in the chromatogram obtained with the reference solution. Spray with dinitrophenylhydrazine TS, stand for a moment, the spots gradually turn orange-red.

(3) Ultrasonicate separately 0.5 g of Rhizoma Chuanxiong reference drug and Radix Angelicae Sinensis reference drug with 15 ml of ether for 5 minutes, filter, and evaporate the filtrates to dryness. Dissolve the residues in 1 ml of ethyl acetate as the reference drug solutions. Carry out the method for thin layer chromatography (Appendix Ⅵ B), using silica gel G as the coating substance and a mixture of *n*-hexane and ethyl acetate (9:1) as the mobile phase. Apply separately 5 μl of each of the test solution obtained under Indentification (2) and the above two reference drug solutions to the plate. After developing and removal of the plate, dry in air, examine under ultraviolet light at 365 nm. The fluorescent spots in the chromatogram obtained with the test solution correspond in position and colour to the spots in the chromatograms obtained with the reference drug solutions.

(4) Grind 15 tablets to fine powder, ultrasonicate with 20 ml of ethanol for 15 minutes, filter, and evaporate the filtrate to dryness. Dissolve the residue in 20 ml of water and extract with three 20-ml quantities of ether, and discard the ether solutions. Extract again with two 20-ml quantities of *n*-butanol saturated with water, combine the *n*-butanol solutions, wash with three 10-ml quantities of water, and evaporate the *n*-butanol solution to dryness. Dissolve the residue in 1 ml of ethanol, add a quantity of neutral aluminium oxide, stir well and dry on a water bath, apply to a column (1-1.5 cm in diameter) packed with neutral aluminium oxide (200-300 mesh, 1 g), elute with 40 ml of methanol. Collect the eluates, evaporate to dryness, dissolve the residue in 1 ml of ethanol as the test solution. Dissolve paeoniflorin CRS in ethanol to produce a solution containing 2 mg per ml as the reference solution. Carry out the method for thin layer chromatography (Appendix Ⅵ B), using sillica gel G as the coating substance and a mixture of chloroform, ethyl acetate, methanol and formic acid (40:5:10:0.5) as the mobile phase. Apply separately 5 μl of each of the two solutions to the plate. After developing and removal of the plate, dry in air, spray with 5% vanillin in sulfuric acid and heat at 105℃ to the spots clear. The spot in the chromatograph obtained with the test solution corresponds in position and colour to the spot in the chromatogram obtained with the reference solution.

Other requirements Comply with the general requirements for tablets (Appendix Ⅰ D).

Assay Carry out the method for high performance liquid chromatography (Appendix Ⅵ D).

Chromatographic system and system suitability Use octadecylsilane bonded silica gel as the stationary phase and a mixture of acetonitrile and 1% phosphoric acid (12:88) as the mobile phase. As detector a spectrophotometer set at 230 nm. The number of theoretical plates of the column is not less than 3000, calculated with the reference to the peak of paeoniflorin.

Reference solution Weigh accurately 10 mg of paeoniflorin CRS, in a 50 ml volumetric flask, add with diluted ethanol to volume, and shake well. Accurately measure 2 ml to a 10 ml volumetric flask, add diluted ethanol to volume, and shake well. (containing 40 μg of paeoniflorin per ml).

Test solution Grind 20 tablets, weighed accurately, into fine powder, weigh accurately 1 g in a stopper conical flask, add 25 ml of diluted ethanol, weigh and ultrasonicate (power, 100 W; frequency, 40 kHz) for 30 minutes, allow to cool, weigh again, replenish the loss of weight with the diluted ethanol, and shake well. Filter and use the successive filtrate as the test solution.

Procedure Inject accurately 10 μl of each of the reference solution and the test solution into the column and calculate the content.

It contains not less than 0.25 mg of paeoniflorin ($C_{23}H_{28}O_{11}$) per tablet, referred to Radix Paeoniae Alba and Radix Paeoniae Rubra.

Action To nourish blood and soothe the liver, and regulate menstruation to kill pain.

Indications Menstrual disorders, dysmenorrhea and illnesses before or after menstruation due to a deficiency of blood and stagnation of *liver-qi*, with manifestation of delayed menstrual cycles, oligomenorrhea with clots, pain in the lower abdomen during periods, decline of the clots to discharge, distending pain in breasts before menstruation, restlessness and poor appetite.

Usage and dosage 4 tablets, 3 times a day.

Strength 0.3 g per tablet

Storage Preserve in tightly closed containers.

Fuke Tiaojing Pian
(妇科调经片)

Fuke Tiaojing Tablets

Ingredients Radix Angelicae Sinensis 144 g; Rhizoma Chuanxiong 16 g; Rhizoma Cyperi (stir-baked with vinegar) 400 g; Rhizoma Atractylodis Macrocephalae (stir-baked with bran) 23 g; Radix Paeoniae Alba 12 g; Radix Paeoniae Rubra 12 g; Rhizoma Corydalis (stir-baked with vinegar) 32 g; Radix Rehmanniae Praeparata 48 g; Fructus Jujubae 80 g; Radix et Rhizoma Glycyrrhizae 11 g.

Procedure Pulverize Rhizoma Atractylodis Macrocephalae, Rhizoma Corydalis, Radix Angelicae Sinensis and Rhizoma Chuanxiong to fine powder, and sift. Decoct Rhizoma Cyperi and other five ingredients with water twice, 3 hours for the first time and 2 hours for the second time, filter, combine the filtrate, concentrate to thick extract. Mix well with the above fine powder and a quantity of adjuvants, make granules, and dry below 60℃, make to 1000 tablets and coat with film or sugar.

Description Sugar or film coated tablets with brown or blackish-brown core; taste, bitter and pungent.

Identification (1) To 25 tablets with coating removed, pulverized to fine powder to a stopper conical flask, add 1 ml of concentrated ammonia TS and 20 ml of chloroform, stopped tightly and shake well, macerate for 1 hour with occasional shaking, filter. Extract with two 10-ml quantities of dilute hydrochloric acid TS. Combine the acid extracts, adjust to alkaline with concentrated ammonia TS, extract with two 15-ml quantities of chloroform. Combine the chloroform extracts, evaporate to dryness, and dissolve the residue in 0.5 ml of ethanol as the test solution. Prepare a solution of 0.8 g of Rhizoma Corydalis reference drug in the same manner as the reference drug solution. Carry out the method for thin layer chromatography (Appendix Ⅵ B), using silica gel G mixed with sodium carboxymethylcellulose as the coating substance and the mixture of *n*-hexane, chloroform, methanol and diethylamine (10∶6∶1∶0.05) as the mobile phase. Apply separately 10 μl of the above two solutions to the plate. After developing and removal of the plate, dry in air, and fumigate the plate in iodine vapour, and examine under ultraviolet light at 365 nm. The main fluorescent spots in the chromatogram obtained with the test solution correspond in position and colour to the main fluorescent spots in the chromatogram obtained with the reference drug solution.

(2) To 5 tablets with coating removed, pulverized to fine powder to a stopper conical flask, add 20 ml of *n*-hexane, ultrasonicate for 15 minutes, and filter, evaporate the filtrate to dryness, and dissolve the residue in 1 ml of ethanol as the test solution. Prepare a solution of 1 g of Radix Angelicae Sinensis reference drug in the same manner as the reference drug solution. Carry out the method for thin layer chromatography (Appendix Ⅵ B), using silica gel G mixed with sodium carboxymethylcellulose as the coating substance and the mixture of *n*-hexane and ethyl acetate (9∶1) as the mobile phase. Apply separately 10 μl of each of the test solution and the reference solution to the plate. After developing and removal of the plate, dry in air, examine under ultraviolet light at 365 nm. The fluorescent spots in the chromatogram obtained with the test solution correspond in position and colour to the fluorescent spots in the chromatogram obtained with the reference drug solution.

Other requirements Comply with the general requirements for tablets (Appendix Ⅰ D).

Assay Carry out the method for high performance liquid chromatography (Appendix Ⅵ D) (Manipulate protected from light).

Chromatographic system and system suitability Use octadecylsilane bonded silica gel as the stationary phase and the mixture of methanol and 0.1% solution of phosphoric acid (30∶70) as the mobile phase. As detector a spectrophotometer sat at 320 nm. The number of theoretical plates for the column is not less than 8000, calculated with the reference to the peak of ferulic acid.

Reference solution Dissolve a quantity of ferulic acid CRS, accurately weighed, in methanol in an amber volumetric flask to produce a solution containing 5 μg per ml as the reference solution.

Test solution To 10 tablets with coating removed, weighed accurately, pulverized to fine powder, weighed accurately 1 g of the powder to a stopper conical flask. Add accurately 20 ml of methanol, stopped tightly, weighed accurately, ultrasonicate (power, 160 W; frequency, 50 kHz) for 60 minutes, allow to cool, weighed accurately again, replenished the lost weight with methanol, mix well and filter. Discard the initial filtrate, and use the successive filtrate as the test solution.

Procedure Inject accurately 10 μl of each of the reference solution and the test solution into the column and calculate the content.

It contains not less than 25 μg of ferulic acid ($C_{10}H_{10}O_4$) per tablet, referred to Radix Angelicae Sinensis and Rhizoma Chuanxiong.

Action To nourish blood and liver and regulate *qi* flow and menstruation.

Indications Irregular menstruation, advanced or delayed menstrual cycles or dysmenorrhea due to stagnation of *liver-qi* and a deficiency of blood.

Usage and dosage 4 tablets, 4 times a day.

Strength 0.32 g per film-coated tablet

Storage Tightly closed.

Fuke Tongjing Wan
(妇科通经丸)

Fuke Tongjing Pills

Ingredients Fructus Crotonis (processed) 80 g; Resina Toxicodendri (carbonized) 160 g; Rhizoma Cyperi (stir-baked with vinegar) 200 g; Flos Carthami 225 g; Radix et Rhizoma Rhei (stir-baked with vinegar) 160 g; Lignum Aquilariae Resinatum 163 g; Radix Aucklandiae 225 g; Rhizoma Curcumae (boiled with vinegar) 163 g; Rhizoma Sparganii (stir-baked with vinegar) 163 g; Radix Curcumae 163 g; Radix Scutellariae 163 g; Folium Artemisiae Argyi (carbonized) 75 g; Carapax Trionycis (processed with vinegar) 163 g; Sal Ammoniac (processed with vinegar) 100 g; Squama Manis (processed with vinegar) 163 g.

Procedure Pulverize the above ingredients, except Fructus Crotonis, to fine powder, sift, mix well with the fine powder of Fructus Crotonis. To each 100 g of the powder add 100 g of yellow wax and make pills. Coat each 500 g of waxed pills with 7.8 g of Cinnabaris powder and polish.

Description Vermillion waxed pills with yellowish-brown core; odour, slight; taste, slightly salty.

Identification (1) To 4 g of the pills, cut into pieces, add 50 ml of water, boil and maintain boiling for 10 minutes, cool in an ice bath for 30 minutes, remove the wax coat and filter. To a quarter of the filtrate, add 1 ml of hydrochloric acid, heat on a water bath for 30 minutes, cool immediately, extract by shaking with two 5-ml quantities of ether. Evaporate the combined ether solution to dryness, dissolve the residue in 1 ml of ethyl acetate as the test solution. To 0.1 g of Radix et Rhizoma Rhei reference drug, add 20 ml of methanol, macerate at room temperature for 1 hour, filter, evaporate 5 ml of the filtrate to dryness, dissolve the residue in 10 ml of water, add 1 ml of hydrochloric acid, heat on a water bath for 30 minutes to prepare a solution in the same manner as the reference drug solution. Carry out the method for thin layer chromatography (Appendix VI B), using silica gel H mixed with sodium carboxymethylcellose as the coating substance and the upper layer of a mixture of petroleum ether (30-60℃), ethyl formate and formic acid (15∶5∶1) as the mobile phase. Apply separately 4 μl of the test solution and 2 μl of the reference drug solution to the plate. After developing and removal of the plate, dry in air and examine under ultraviolet light at 365 nm. The five orange fluorescent spots in the chromatogram obtained with the test solution correspond in position and colour to the spots in the chromatogram obtained with reference drug solution. Examine in daylight, the colour of the spots changes to red on exposure to ammonia vapour.
(2) Evaporate the remainder of the filtrate obtained under Identification (1) to dryness, dissolve the residue in 2 ml of methanol as the test solution. Dissolve baicalin CRS in methanol to produce a solution containing 1 mg per ml as the reference solution. Carry out the method for thin layer chromatography (Appendix VI B), using silica gel G mixed with sodium carboxymethylcelloluse containing 4% solution of sodium acetate as the coating substance and a mixture of ethyl acetate, butanone, methanol and water (5∶3∶1∶1) as the mobile phase. Apply, in strip, separately 5 μl of each of the two solutions to the plate. After developing and removal of the plate, dry in air, spray with 1% ferric chloride in ethanol. The band in the chromatogram obtained with the test solution corresponds in position and colour to the band in the chromatogram obtained with the reference solution.

Other requirements Comply with the general requirements for pills (Appendix I A), except time limit test for disintegration, which is not necessary to be taken.

Action To remove stagnated blood to stimulate menstrual flow and disintegrate masses.

Indications Amenorrhea, dysmenorrhea and abdominal masses due to stagnation of *qi* and blood with manifestations of prolonged amenorrhea, pain in the lower abdomen, worse when pressed, abdominal mass, constriction in the chest and proneness to sighing.

Usage and dosage 3 g, once a day. Taken with millet soup or yellow rice wine before breakfast.

Precaution It is forbidden to prescribe to pregnant women and patients with amenorrheal abdominalgia or loose stools due to a deficiency of *qi* and blood; avoid raw, cold and pungent foods, and buckwheat flour.

Strength 1 g per 10 pills

Storage Preserve in well closed containers, proteced from moisture.

Fuyanjing Jiaonang (妇炎净胶囊)

Fuyanjing Capsules

Fuyanjing Capsules are prepared from Herba Picriae, Herba Elephantopi, Radix Angelicae Sinensis, Caulis Spatholobi and Radix Zanthoxyli etc.

Description Hard capsules, containing dark brown powder; odour, slightly aromatic; taste, bitter.

Identification (1) To 1.2 g of the contents, add 10 ml of ethanol, heat under reflux for 5 minutes, and filter. Evaporate the filtrate to dryness, and dissolve the residue in 1 ml of ethanol as the test solution. Prepare a solution of 1 g of Herba Picriae reference drug in the same manner as the reference drug solution. Carry out the method for thin layer chromatography (Appendix VI B), using silica gel G as the coating substance and a mixture of chloroform and methanol (4∶1) as the mobile phase. Apply separately 10 μl of each of the two solutions to the plate. After developing and removal of the plate, dry in air. Spray with 5% vanillin in sulfuric acid and heat at 105℃ for 5 minutes. The spots in the chromatogram obtained with the test solution correspond in position and colour to the spots in the chromatogram obtained with the reference drug solution.
(2) To 2 g of the contents add 20 ml of ethanol, then transfer to a mortar, grind for 2 minutes, and filter. Evaporate the filtrate to dryness, and dissolve the residue in 1 ml of chloroform as the test solution. To 1.9 g of Radix Zanthoxyli reference drug add water, decoct for 20 minutes, and filter. Concentrate the filtrate to dryness, dissolve the residue in a quantity of ethanol and filter. Evaporate the filtrate to dryness, and dissolve the residue in 1 ml of chloroform as the reference drug solution. Carry out the method for thin layer chromatography (Appendix VI B), using silica gel G mixed with sodium carboxymethyl cellulose as the coating substance and a mixture of benzene and chloroform (1∶1) as the mobile phase. Apply separately 10 μl of each of the two solutions to the plate. After developing and removal of the plate, dry in air. Examine under the ultraviolet light at 365 nm. The purplish-blue fluorescent spot in the chromatogram obtained with the test solution corresponds in position and colour to the spot in the chromatogram obtained with the reference drug solution.

Other requirements Comply with the general requirements for capsuls (Appendix I L).

Action To clear *heat* and *dampness*, and regulate menstruation and arrest leukorrhagia.

Indications Leukorrheal disease, irregular menstruation and dysmenorrhea due to accumulation of *damp-heat*; chronic pelvic inflammation, annexitis and endometrial inflammation with above symptoms.

Usage and dosage 3 capsules, 3 times a day.

Precaution Be cautious about pregnant women.

Strength 0.4 g per capsule

Storage Preserve in tightly closed containers.

Fuzi Lizhong Wan
(附子理中丸)

Fuzi Lizhong Pills

Ingredients Radix Aconiti Lateralis Praeparata 100 g; Radix Codonopsis 200 g; Rhizoma Atractylodis Macrocephalae (stir-baked) 150 g; Rhizoma Zingiberis 100 g; Radix Glycyrrhizae 100 g.

Procedure Pulverize the above five ingredients to fine powder, sift and mix well. To each 100 g of the powder add 35-50 g of refined honey and a quantity of water, make water-honeyed pills and dry. Alternatively, add 100-120 g of refined honey to make big honeyed pills.

Description Brown to brownish-black water-honeyed pills or big honeyed pills; odour, slight; taste, slightly sweet and pungent.

Identification (1) Microscopical: Starch granules long ovoid, broad-ovoid or irregular rounded, 25-32 μm in diameter, hilum pointed, situated on the relatively small end, striations distinct. Anastomosing laticiferous tubes 12-15 μm in diameter, containing minute granular substance. Fibre bundles surrounded by parenchymatous cells containing prisms of calcium oxalate, forming crystal fibres.
(2) Cut 6 g of the big honeyed pills into pieces, or pulverize 4 g of the water-honeyed pills, add 250 ml of water in a 500 ml round-bottom flask, connect to an apparatus for the determination of violate oil, add water through the top of the apparatus until the graduated measuring tube is full and the water overflows into flask. Add again 1 ml of petroleum ether (60-90℃) and then connect to the reflux condenser. Heat under reflux for 2 hours, cool and separate the petroleum ether layer as the test solution. To 0.5 g of Rhizoma Atractylodis Macrocephalae, add 1 ml of ethyl acetate, ultrasonicate for 15 minutes, allow to stand, use the supernatant as the reference drug solution. Carry out the method for thin layer chromatography (Appendix Ⅵ B), using silica gel G mixed with sodium carboxymethyl cellulose as the coating substance and a mixture of petroleum ether (60-90℃) and ethyl acetate (20∶0.1) as the mobile phase. Apply separately 8 μl of the test solution and 4 μl of the reference drug solution to the plate. After developing and removal of the plate, dry in air. Spray with 5% vanillin in sulfuric acid and visualize under a current of hot air. The main spots in the chromatogram obtained with the test solution correspond in position and colour to the spots in the chromatogram obtained with the reference drug solution.

Limit test of aconitine To 36 g of the big honeyed pills, cut into pieces, or 25 g of the water-honeyed pills, triturated well; add 4 ml of ammonia TS, stir well, allow to stand for 2 hours, add 60 ml of ether, shake for 1 hour, stand for 24 hours, filter, evaporate the filtrate to dryness. Dissolve the residue in 1 ml of dehydrated ethanol as the test solution. Dissolve aconitine CRS in 1 ml of dehydrated ethanol to produce a solution containing 1 mg per ml as the reference solution. Carry out the method for thin layer chromatography (Appendix Ⅵ B), using silica gel G as the coating substance and a mixture of benzene, ethyl acetate and diethylamine (14∶4∶1) as the mobile phase. Apply separately 12 μl of the test solution and 5 μl of the reference solution to the plate. After developing and removal of the plate, dry in air and spray with dilute potassium iodobismuthate TS. The size of the spot in the chromatogram obtained with the test solution is less than the corresponding spot in the chromatogram obtained with the reference solution or no spot reveals in the chromatogram obtained with the test solution.

Other requirements Comply with the general requirements for pills (Appendix Ⅰ A).

Action To warm the *middle-energizer* and invigorate the spleen.

Indications Diarrhea due to cold from deficiency in the spleen and stomach with manifestations of cold pain in the stomach and abdomen, vomiting of watery fluid, diarrhea or loose stools, and cold hands and feet.

Usage and dosage 6 g of water-honeyed pills or 1 big honeyed pill, 2-3 times a day.

Precaution Be cautious about pregnant women.

Strength 9 g per big honeyed pill

Storage Preserve in tightly closed containers.

Ganji San
(疳积散)

Ganji Powder

Ingredients Fossilia Spiriferis (calcined) 100 g; Concha Haliotidis (calcined) 100 g; Semen Quisqualis 100 g; Endothelium Corneum Gigeriae Galli (stir-baked) 50 g; Flos Eriocauli 50 g; Radix et Rhizoma Clematidis 50 g; Poria 100 g.

Procedure Pulverize the above seven ingredients to fine powder, sift, mix well.

Description A greyish-yellow powder; taste, slightly astringent.

Identification (1) Microscopical: Irregular branched masses colourless, dissolved in chloral hydrate TS; hyphae colourless or pale brown, 4-6 μm in diameter. Reticulated cells subrounded or elliptical, with irregularly and reticulately thickened and slightly lignified walls. Glandular hairs with a 1-4-celled head, oblong, surface bearing densely fine reticulate striations, and stalk mostly unicellular.
(2) To 0.5 g of the powder, add 2 ml of dilute hydrochloric acid, carbon dioxide gas is produced, which yields a white precipitate with calcium hydroxide TS. Filter, the filtrate yields the characteristic reactions of calcium salts (Appendix Ⅳ).

Other requirements Comply with the general requirements for powders (Appendix Ⅰ B).

Action To promote digestion to remove retained food.

Indications Child malnutrition due to retained food in the spleen and stomach with manifestations of no desire for food or milk, emaciation and sallow complexion, abdominal bloating and indigestion.

Usage and dosage 9 g, twice a day, taken with warm rice soup and some sugar; appropriate reduction of the dosage for children under 3 years old.

Storage Preserve in well closed containers, protected from moisture.

Ganmao Qingre Keli
(感冒清热颗粒)

Ganmao Qingre Granules

Ingredients Spica Schizonepetae 200 g; Herba Menthae 60 g; Radix Saposhnikoviae 100 g; Radix Bupleuri 100 g; Folium Perillae 60 g; Radix Puerariae Lobatae 100 g; Radix Platycodonis 60 g; Semen Armeniacae Amarum 80 g; Radix Angelicae Dahuricae 60 g; Herba Corydalis Bungeanae 200 g; Rhizoma Phragmitis 160 g.

Procedure Isolate the volatile oil from Spica Schizonepetae, Herba Menthae, Folium Perillae by distillation, and collect the aqueous extract solution in another container. To the residue of distillation, add the other eight ingredients, decoct with water twice. Combine the decoctions, filter, combine the filtrates and the above aqueous solutions, concentrate to a thin extract with a relative density of 1.32-1.35 (50℃). To the extract, add a quantity of sucrose, dextrin and ethanol to make granules, dry, add the volatile oil and mix well, make to 1600 g of granules; or concentrate to a thin extract with a relative density of 1.32-1.35 (50℃), add a quantity of excipient and mix well to make to 800 g granules without sucrose, dry, add the above volatile oil and mix well; or concentrate in vacuum to a solution with relative density of 1.08-1.10 (55℃), dry by spraying, make dried extract powder, mix with a quantity of lactose, add the above volatile oil, mix well and dry, make to 400 g of granules.

Description Brownish-yellow granules; taste, sweet, slightly bitter; or brown granules; taste, slightly bitter (without sucrose or with lactose).

Identification (1) Pulverize 1 pack of the granules, add 25 ml of ethyl acetate, ultrasonicate for about 20 minutes, and filter. Evaporate the filtrate to dryness. Dissolve the residue in 0.5 ml of methanol as the test solution. Dissolve puerarin CRS in methanol to produce a solution containing 1 mg per ml as the reference solution. Carry out the method for thin layer chromatography (Appendix Ⅵ B), using silica gel G as the coating substance and a mixture of chloroform, methanol and water (28 : 10 : 1) as the mobile phase. Apply separately 5 μl of each of the two solutions to the plate. After developing and removal of the plate, dry in air, and examine under ultraviolet light at 365 nm. The fluorescent spot in the chromatogram obtained with the test solution corresponds in position and colour to the spot in the chromatogram obtained with the reference solution.
(2) Pulverize 1 pack of the granules, dissolve the powder in 50 ml of water, adjust pH to 12 with concentrated ammonia TS, extract with two 25-ml quantities of chloroform by shaking, separate the chloroform layer, and evaporate to dryness. Dissolve the residue in 1 ml of chloroform as the test solution. To 1 g of Herba Corydalis Bungeanae reference drug, add 50 ml of water, ultrasonicate for 10 minutes, filter. Adjust the filtrate pH to 12 with concentrated ammonia TS, and prepare a solution in the same manner as the reference drug solution. Carry out the method for thin layer chromatography (Appendix Ⅵ B), using silica gel G mixed with sodium carboxymethyl cellulose containing 0.4% solution of sodium hydroxide as the coating substance and a mixture of benzene, ether and dichloromethane (10 : 5 : 14) as the mobile phase. Apply separately 10 μl of each of the test solution and the reference drug solution to the plate. After developing and removal of the plate, dry in air, spray with modified potassium iodobismuthate TS. The spots in the chromatogram obtained with the test solution correspond in position and colour to the spots in chromatogram obtained with the reference drug solution.
(3) Pulverize 0.6 g of the granules, or 3 g of the granules without sucrose, or 1.5 g of the granules with lactose to powder. Dissolve the powder in 30 ml of water, extract by shaking with two 15-ml quatities of ether, and discard the ether solution. Extract the water solution with two 20-ml quantities of *n*-butanol saturated with water, combine the *n*-butanol extracts. Add 40 ml of ammonia TS, mix well, stand to separate and evaporate the *n*-butanol extract to dryness, and dissolve the residue in 1 ml of methanol as the test solution. To 0.5 g of Radix Bupleuri reference drug, add 20 ml of methanol, heat at 80℃ on a water bath under reflux for 1 hour, cool and filter, and evaporate the filtrate to dryness, dissolve the residue in 10 ml of water in the same manner as the reference drug solution. Carry out the method for thin layer chromatography (Appendix Ⅵ B), using silica gel G as the coating substance and the lower layer of a mixture of chloroform, methanol and water (13 : 7 : 2), standing below 10℃, as the mobile phase. Apply separately 8 μl of the test solution and 4 μl of the reference drug solution to the plate. After developing and removal of the plate, dry in air, spray with 1% solution of *p*-dimethylaminobenzaldehyde in 10% sulfuric acid in ethanol, heat to the spots clear. The main spots in the chromatogram obtained with the test solution correspond in position and

colour to the main spots in the chromatogram obtained with the reference drug solution. Examine under ultraviolet light at 365 nm, the yellow fluorescent spots in chromatogram obtained with the test solution correspond in position and colour to the spot in chromatogram obtained with the reference drug solution.

(4) To 1 g of Radix Saposhnikoviae reference drug, add 20 ml of acetone, ultrasonicate for 20 minutes, filter, evaporate the filtrate to dryness, dissolve the residue in 1 ml of methanol as the reference drug solution. Dissolve a quantity of cimicifugoside CRS and 5-*O*-methylvisamminol CRS in methanol to produce a mixture containing 1 mg of each per ml as the reference solution. Carry out the method for thin layer chromatography (Appendix Ⅵ B), using silica gel GF_{254} as the coating substance and a mixture of chloroform and methanol (4 : 1) as the mobile phase. Apply separately 2 μl of each of the reference solution and the reference drug solution and 8 μl of the test solution obtained under Identification (3) to the plate. After developing for two times and removal of the plate, dry in air. Examine under ultraviolet light at 254 nm. The spots in the chromatogram obtained with the test solution correspond in position and colour to the spots in chromatogram obtained with the reference drug solution and the reference solution.

Other requirements Comply with the general requirements for granules (Appendix Ⅰ C).

Assay Carry out the method for high performance liquid chromatography (Appendix Ⅵ D).

Chromatographic system and system suitability Use octadecylsilane bonded silica gel as the stationary phase and a mixture of acetonitril and water (11 : 89) as the mobile phase. As detector a spectrophotometer set at 250 nm. The number of theoretical plates of the column is not less than 4500, calculated with the reference to the peak of puerarin.

Reference solution Dissolve a quantity of puerarin CRS, accurately weighed, in 30% ethanol to produce a solution containing 16 μg per ml as the reference solution.

Test solution Weigh accurately 0.8 g of the granules, or 0.4 g of the granules without sucrose, or 0.2 g of the granules with lactose, obtained in the test of weight variation, and triturated to fine powder, to a stopper conical flask, accurately add 50 ml of 30% ethanol, stopper tightly and weigh. Ultrasonicate (power, 250 W; frequency, 33 kHz) for 20 minutes, allow to stand to room temperature, weigh again, replenish the lost weight with 30% ethanol, shake thoroughly and filter, use the successive filtrate as the test solution.

Procedure Inject accurately 10 μl of each of the reference solution and the test solution into the column, and calculate the content.

It contains not less than 10.0 mg of puerarin ($C_{21}H_{20}O_9$) per pack, referred to Radix Puerariae Lobatae.

Action To disperse *wind* and *cold*, and release the exterior and clear *heat*.

Indications Common cold due to *wind-cold* with manifestations of headache, fever, aversion to cold, general pain, thin nasal discharge, coughing and dry throat.

Usage and dosage 1 pack, twice a day, taken with boiled water.

Strength (1) 12 g per pack
(2) 6 g per pack (without sucrose)
(3) 3 g per pack (with lactose)

Storage Preserve in tightly closed containers.

Ganmaoshu Keli
(感冒舒颗粒)

Ganmaoshu Granules

Ingredients Folium Isatidis; Fructus Forsythiae; Herba Schizonepetae; Radix Saposhnikoviae; Herba Menthae; Fructus Arctii; Radix Platycodonis; Radix Angelicae Dahuricae; Radix et Rhizoma Glycyrrhizae.

Procedure Distill volatile oil from one third amount of Fructus Forsythiae, Herba Schizonepetae and Herba Menthae, collect the water solution after distillation in a separate container, decoct the residue, the remanent parts and the other ingredients with water twice, 1.5 hours for each, combine the decoctions, filter and concentrate the filtrate to a relative density of 1.20-1.25 (90℃), adjust with ethanol to a content of 60% ethanol, stand for 24 hours and separate the supernatant, recover ethanol to no ethanolic smell in vacuum and concentrate the filtrate to a thick extract with a relative density of 1.33 (65℃). Add a quantity of sucrose and dextrin, stir thoroughly, make granules, dry, spray the volatile oil and stir thoroughly, make to 1000 g of granules.

Description Pale brown to brown colour granules; taste, sweet and then sour and bitter.

Identification (1) Dissolve 15 g of the granules, pulverized to fine power, in 50 ml of water by stirring, centrifuge, extract by shaking the supernatant with three 20-ml quantities of *n*-butanol saturated with water. Combine the extracts, wash with two 20-ml quantities of ammonia TS, separate the *n*-butanol extract, evaporate to dryness, dissolve the residue in 1 ml of methanol as the test solution. Heat 1 g of Fructus Forsythiae reference drug in 40 ml of water on a water bath for 1 hour, filter, evaporate the filtrate to dryness, heat under reflux the residue in 20 ml of ethanol for 30 minutes, filter, evaporate the filtrate to dryness. Dissolve the residue in 1 ml of methanol as the reference drug solution. Carry out the method for thin layer chromatography (Appendix Ⅵ B), using silica gel G as the coating substance and a mixture of chloroform and methanol (20 : 1) as the mobile phase. Apply separately 5 μl of each of the above two solutions to the plate. After developing and removal of the plate, dry in air. Spray with a mixture of acetic anhydride and sulfuric acid (20 : 1), heat at 105℃ to spots clear. Examine in daylight, the spots in the chromatogram obtained with the test solution correspond in position and colour to the spots in the chromatogram obtained with the reference drug solution. Examine under ultraviolet light at 365 nm, the fluorescent spots in the chromatogram obtained with the test solution correspond in position and colour to the spots in the chromatogram obtained with the reference drug solution.

(2) Heat under reflux 1 g of Fructus Arctii reference drug in 20 ml of ethanol for 1 hour, filter, evaporate the filtrate to dryness, dissolve the residue in 2 ml of ethanol, filter, use the filtrate as the reference drug solution. Carry out the method for thin layer chromatography (Appendix Ⅵ B), using silica gel G as the coating substance and a mixture of chloroform, methanol and water (40 : 10 : 1) as the mobile phase. Apply separately 5 μl of each of the test solution obtained under Identification (1) and the above reference drug solution to the plate. After developing and removal of the plate, dry in air. Spray with 10% sulfuric acid in ethanol, heat at 105℃ to spots clear. The spots in the chromatogram obtained with the test solution correspond in position and colour to the spots in the chromatogram obtained

with the reference drug solution.
(3) Pulverized 15 g of the granules, dissolve in 60 ml of water (heat if necessary and cool), filter. Extract the filtrate with two 40-ml quantities of ether by shaking, combine the extracts, and evaporate to dryness. Dissolve the residue in 0.5 ml of chloroform as the test solution. Dissolve a quantity of indirubin CRS in chloroform to produce a solution containing 0.1 mg per ml as the reference solution. Carry out the method for thin layer chromatography (Appendix Ⅵ B), using silica gel G mixed with sodium carboxymethyl cellulose as the coating substance and a mixture of petroleum ether (30-60℃) and ethyl acetate (7 : 3) as the mobile phase. Apply separately 6 μl of each of the test solution and the reference solution to the plate. After developing and removal of the plate, dry in air. The spot in the chromatogram obtained with the test solution corresponds in position and colour to the spot in chromatogram obtained with the reference solution.

Other requirements Comply with the general requirements for granules (Appendix Ⅰ C).

Assay Carry out the method for high performance liquid chromatography (Appendix Ⅵ D).

Chromatographic system and system suitability Use octadecylsilane bonded silica gel as the stationary phase and a mixture of acetonitril and water (23 : 77) as the mobile phase. As detector a spectrophotometer set at 280 nm. The number of theoretical plates of the column is not less than 3000, calculated with the reference to the peak of arctiin.

Reference solution Dissolve a quantity of arctiin CRS, accurately weighed, in methanol to prepare a solution containing 0.25 mg per ml as the reference solution.

Test solution Weigh accurately 1.5 g of the granules, obtained in the test of weight variation, and pulverized to fine powder, to a stopper conical flask, accurately add 25 ml of methanol, stopper tightly and weigh. Ultrasonicate (power, 250 W; frequency, 33 kHz) for 20 minutes, allow to stand to room temperature, weigh again, replenish the lost weight with methanol, shake thoroughly and filter, use the successive filtrate as the test solution.

Procedure Inject accurately 10 μl of each of the reference solution and the test solution into the column, and calculate the content.
It contains not less than 30.0 mg of arctiin ($C_{27}H_{34}O_{11}$) per pack, referred to Fructus Arctii.

Action To disperse *wind* and clear *heat*, and release the exterior to disperse *lung-qi*.

Indications Common cold due to *wind-heat* with manifestations of headache, lassitude, fever, aversion to cold, stuffy and running nose, coughing and sore throat.

Usage and dosage Taken with boiled water, 15 g, 3 times a day; double dosage for the first time if the condition is serious.

Strength 15 g per pack

Storage Preserve in well closed containers.

Ganmao Tuire Keli
(感冒退热颗粒)

Ganmao Tuire Granules

Ingredients Folium Isatidis 435 g; Radix Isatidis 435 g; Fructus Forsythiae 217 g; Rhizoma Polygoni Bistortae 217 g.

Procedure Decoct the above four ingredients with water twice, 1.5 hours for each time. Combine the decoctions, filter, concentrate the filtrate to a thin extract with a relative density of about 1.08 (90-95℃). Allow to cool to the room temperature, add an equal quantity of ethanol to precipitate and concentrate the supernatant liquid to a thin extract with a relative density 1.20 (60℃). Add an equal quantity of water, stir, allow to stand for 8 hours, concentrate the supernatant liquid to a thick extract with a relative density of 1.38-1.40 (60℃). Add a quantity of sucrose powder, dextrin and ethanol, make granules and dry, make to 1000 g of granules; or concentrate the supernatant to a thin extract with a relative density 1.09-1.11 (60℃), add a quantity of dextrin and flavoring agents, mix well and dry by spraying, make to 250 g of granules without sucrose.

Description Brownish-yellow granules; taste, sweet, slightly bitter, or taste, bitter, slightly sweet (without sucrose).

Identification (1) Dissolve 1 pack of the granules in 50 ml of water, filter, extract the filtrate with successive quantities of 40 ml and 30 ml. Combine the ether solutions, concentrate to about 0.5 ml, used as the test solution. Dissolve a quantity of indirubin CRS in ether to produce a solution containing 0.05 mg per ml as the reference solution. Carry out the method for thin layer chromatography (Appendix Ⅵ B), using silica gel G as the coating substance and a mixture of benzene and acetone (4 : 1) as the mobile phase. Apply separately 15 μl of each of the two solutions to the plate. After developing and removal of the plate, dry in air. The spot in the chromatogram obtained with the test solution corresponds in position and colour to the spot in the chromatogram obtained with the reference solution.
(2) Pulverize 5 g of the granules, or 1.25 g of the granules without sucrose, add 25 ml of methanol, ultrasonicate for 20 minute in an ice bath, filter, evaporate the filtrate to dryness, dissolve the residue in 2 ml of methanol as the test solution. Dissolve a quantity of forsythin CRS in methanol to produce a solution containing 1 mg per ml as the reference solution. Carry out the method for thin layer chromatography (Appendix Ⅵ B), using silica gel G as the coating substance and a mixture of chloroform, methanol and formic acid (9 : 2 : 0.1) as the mobile phase. Apply separately 5-10 μl of each of the test solution and the reference solution to the plate. After developing and removal of the plate, dry in air, spray with 10% sulfuric acid in ethanol, heat at 105℃ to the spot clear. The spot in the chromatogram obtained with the test solution corresponds in position and colour to the spot in chromatogram obtained with the reference solution.

Other requirements Comply with the general requirements for granules (Appendix Ⅰ C).

Assay Carry out the method for high performance liquid chromatography (Appendix Ⅵ D).

Chromatographic system and system suitability Use octadecylsilane bonded silica gel as the stationary phase and a mixture of acetonitril and water (20 : 80) as the mobile phase. As detector a spectrophotometer set at 277 nm. The number of theoretical plates of the column is not less than 5000, calculated with the reference to the peak of forsythin.

Reference solution Dissolve a quantity of forsythin CRS, accurately weighed, in 50% methanol to produce a solution containing 20 μg per ml as the reference solution.

Test solution Weigh accurately 0.5 g of the granules, or 1.25 g of the granules without sucrose, obtained in the test of weight variation, and triturated to fine power. Heat under reflux with two 25-ml quantities of methanol for 30 minutes, filter. Wash the filter funnel and the residue with 15 ml of methanol in portions, combine the washings and the filtrates, and evaporate to dryness. Dissolve the residue in 10 ml of dilute ethanol TS, apply to a column (1 cm in

diameter) packed with neutral aluminium oxide (100-200 mesh, 3 g), elute with 70 ml of dilute ethanol TS, and collect the eluates. Evaporate to dryness and dissolve the residue in 50% methanol, transfer to a 25 ml volumetric flask and dilute to volume, mix well, filter, use the successive filtrate as the test solution.

Procedure Inject accurately 20 μl of each of the reference solution and the test solution into the column, and calculate the content.
It contains not less than 1.2 mg of forsythin ($C_{29}H_{36}O_{15}$) per pack, referred to Fructus Forsythiae.

Action To clear *heat* to relieve *toxicity*, and disperse wind to release the exterior.

Indications Upper respiratory tract infection, acute tonsillitis and pharyngolaryngitis due to affliction from external *wind-heat* and excessive *heat* with manifestations of fever and swollen painful throat.

Usage and dosage 1-2 packs, 3 times a day, taken with boiled water.

Strength (1) 18 g per pack
(2) 4.5 g per pack (without sucrose)

Storage Preserve in tightly closed containers.

Gegen Qinlian Pian
(葛根芩连片)

Gegen Qinlian Tablets

Ingredients Radix Puerariae Lobatae 1000 g; Radix Scutellariae 375 g; Rhizoma Coptidis 375 g; Radix et Rhizoma Glycyrrhizae Praeparata Cum Melle 250 g.

Procedure Pulverize 225 g of Radix Puerariae Lobatae to fine powder. Decoct remained Radix Puerariae Lobatae and Radix et Rhizoma Glycyrrhizae Praeparata Cum Melle with water for 2 times, 2 hours each, combine the decoctions and filter, concentrate the filtrate properly. Carry out the method for percolation as described under liquid extracts and extracts (Appendix I O), macerate Radix Scutellariae and Rhizoma Coptidis respectively with 50% ethanol and percolate. Collect the percolation, recover ethanol, then combine with the above concentrated solution, further concentrate to a thick extract. Add finely powdered Radix Puerariae Lobatae, mix well and dry. Prepare granules and make to 1000 tablets.

Description Dark yellow tablets; odour, slight; taste, bitter.

Identification (1) To 2 tablets, pulverized to powder, add 10 ml of methanol, ultrasonicate for 15 minutes, filter. Dilute 1 ml of the filtrate with methanol to 5 ml as the test solution. To 0.1 g of Rhizoma Coptidis reference drug, add 10 ml of methanol, ultrasonicate for 15 minutes, filter and use the filtrate as the reference drug solution. Dissolve a quantity of berberine hydrochloride CRS in methanol to produce a solution containing 0.5 mg per ml as the reference solution. Carry out the method for thin layer chromatography (Appendix VI B), using silica gel G as the coating substance and a mixture of toluene, ethyl acetate, isopropanol, methanol and concentrated ammonia TS (12 : 6 : 3 : 3 : 1) as the mobile phase. Apply separately 1 μl of each of the above three solutions to the plate. After developing in a chamber pre-equilibrated with ammonia vapour for 15 minutes and removal of the plate, dry in air, examine under ultraviolet light at 365 nm. The fluorescent spots in the chromatogram obtained with the test solution correspond in position and colour to the spots in the chromatogram obtained with the reference drug solution and the reference solution.
(2) To 4 tablets, in fine powder, add 25 ml of ethyl acetate, ultrasonicate for 30 minutes, filter and evaporate the filtrate to dryness. Dissolve the residue in 0.5 ml of methanol as the test solution. Dissolve a quantity of puerarin CRS in dehydrated ethanol to produce reference solution containing 1 mg per ml. Carry out the method for thin layer chromatography (Appendix VI B), using silica gel G mixed with sodium carboxymethyl cellulose as the coating substance and a mixture of chloroform, methanol and water (28 : 10 : 1) as the mobile phase. Apply separately 5 μl of the test solution and 2 μl of the reference drug solution to the plate. After developing and removal of the plate, dry in air, expose to ammonia vapour for 15 minutes and examine under ultraviolet light at 365 nm. The fluorescent spot in the chromatogram obtained with the test solution corresponds in position and colour to the fluorescent spot in the chromatogram obtained with the reference solution.
(3) To 4 tablets, in fine powder, add 30 ml of methanol, heat under reflux for 30 minutes, filter and evaporate the residue to dryness. Dissolve the residue in 10 ml of water, add hydrochloric acid to adjust pH to 3-3.5. Extract with two 10-ml quantities of ethyl acetate, combine the extracts, evaporate to dryness, dissolve the residue in 1 ml of methanol as the test solution. Dissolve a quantity of baicalin CRS in methanol to produce a reference solution containing 1 mg per ml. Carry out the method for thin layer chromatography (Appendix VI B), using silica gel G mixed with sodium carboxymethyl cellulose containing 4% solution of sodium acetate as the coating substance and a mixture of ethyl acetate, butanone, formic acid and water (5 : 3 : 1 : 1) as the mobile phase. Apply separately 10 μl of the test solution and 5 μl of the reference drug solution to the plate. After developing and removal of the plate, dry in air. Spray with a 2% ferric chloride in ethanol. The spot in the chromatogram obtained with the test solution corresponds in position and colour to the spot in the chromatogram obtained with the reference solution.

Other requirements Comply with the general requirements for tablets (Appendix I D).

Action To release muscles and clear *heat*, and stop diarrhea and dysentery.

Indications Diarrhea and dysentery due to accumulation of *damp-heat* with manifestations of fever, excessive thirst, fetid dysentery and abdominal pain and discomfort.

Usage and dosage 3-4 tablets, 3 times a day.

Storage Preserve in tightly closed containers.

Gegen Qinlian Wan
(葛根芩连丸)

Gegen Qinlian Pills

Ingredients Radix Puerariae Lobatae 1000 g; Radix Scutellariae 375 g; Rhizoma Coptidis 375 g; Radix et Rhizoma Glycyrrhizae Praeparata Cum Melle 250 g.

Procedure Carry out the method for percolation described under liquid extracts and extracts (Appendix I O), macerate Radix Scutellariae and Rhizoma Coptidis in 50% ethanol for 24 hours and then percolate. Recover ethanol from the percolation and concentrate properly. Decoct Radix Puerariae Lobatae for 30 minutes, then add the residues of Radix Scutellariae and Rhizoma Coptidis, and Radix et Rhizoma Glycyrrhizae Praeparata Cum Melle, decoct twice, each 1.5 hours. Combine the decoctions, filter, concentrate the filtrate to a quantity, add the above concentrated

percolate and continually concentrate to a thick extract. Dry in vacuum at a low temperature, pulverize to super fine powder, moisten with ethanol and make to 300 g of pills, sift and dry below 60℃.

Description Dark brown to blackish concentrated pills; odour, slight; taste, bitter.

Identification (1) To 0.5 g of fine powder add 40 ml of ethanol, heat under reflux for 30 minutes, filter. Evaporate the filtrate to dryness, dissolve the residue in 15 ml of 0.3% solution of sodium hydroxide, transfer the solution into a separating funnel, adjust pH to 5-6 with dilute hydrochloric acid and extract with 15 ml of ethyl acetate by shaking. Separate and dehydrate the ethyl acetate layer with anhydrous sodium sulfate, evaporate the filtrate to dryness, dissolve the residue in 2 ml ethyl acetate, filter, use the filtrate as the test solution. Dissolve a quantity of puerarin CRS in dehydrated ethanol to produce a solution containing 1 mg per ml as the reference solution. Carry out the method for thin layer chromatography using silica gel G as the coating substance and a mixture of chloroform and methanol (4 : 1) as the mobile phase. Apply separately 10 μl of the test solution and 2 μl of reference solution to the plate. After developing and removal of the plate, dry in air, expose to ammonia vapour for 15 minutes, examine under ultraviolet light at 365 nm. The blue fluorescent spot in the chromatogram obtained with the test solution corresponds in position and colour to the spot obtained with the reference solution.
(2) Pulverize 1 g of the pills, and grind well with 1.5 g of kieselguhr. Heat under reflux for 30 minutes with 40 ml of methanol, filter, evaporate the filtrate to dryness. Dissolve the residue in 15 ml of water, filter, adjust pH to 3.0-3.5 with dilute hydrochloric acid TS. Extract with two 20-ml quantities of ethyl acetate by shaking, combine the extracts, and evaporate to dryness. Dissolve the residue in 1 ml of dehydrated ethanol as the test solution. Dissolve a quantity of baicalin CRS in dehydrated ethanol to produce a solution containing 1 mg per ml as the reference solution. Carry out the method for thin layer chromatography (Appendix Ⅵ B), using silica gel G mixed with sodium carboxymethyl cellulose as the coating substance and a mixture of *n*-butyl acetate, butanone, formic acid and water (5 : 3 : 1 : 1) as the mobile phase. Apply separately 5-10 μl of each of the test solution and the reference solution to the plate. After developing and removal of the plate, dry in air, spray with 1% ferric chloride in ethanol. The spot in the chromatogram obtained with the test solution corresponds in position and colour to the spot in the chromatogram obtained with the reference solution.
(3) Pulverize 1 g of the pills, heat under reflux for 30 minutes with 40 ml of methanol, cool and filter, evaporate the filtrate to dryness. Dissolve the residue in 2 ml of dehydrated ethanol as the test solution. Dissolve a quantity of berberine hydrochloride CRS in methanol to produce a solution containing 0.5 mg per ml as the reference solution. Carry out the method for thin layer chromatography (Appendix Ⅵ B), using silica gel G mixed wtih sodium carboxymethyl cellulose as the coating substance and a mixture of toluene, ethyl acetate, methanol, isopropanol and concentrated ammonia TS (12 : 6 : 3 : 3 : 1) as the mobile phase. Apply separately 1-2 μl of each of the test solution and the reference solution to the plate. After developing in a chamber pre-equilibrated with ammonia vapour and removal of the plate, dry in air. Examine under ultraviolet light at 365 nm. The spot in the chromatogram obtained with the test solution corresponds in position and colour to the spot in chromatogram obtained with the reference solution.

Other requirements Comply with the general requirements for pills (Appendix Ⅰ A).

Assay Carry out the method for high performance liquid chromatography (Appendix Ⅵ D).

Chromatographic system and system suitability Use octadecylsilane bonded silica gel as the stationary phase and a mixture of methanol, acetonitril and water (6 : 8 : 86) as the mobile phase. As detector a spectrophotometer set at 250 nm. The number of theoretical plates of the column is not less than 3000, calculated with the reference to the peak of puerarin.

Reference solution Dissolve a quantity of puerarin CRS, accurately weighed, in methanol to produce a solution containing 60 μg per ml as the reference solution.

Test solution Weigh accurately 0.3 g of the pills, obtained in the test of weight variation and triturated to fine powder, to a stopper conical flask, accurately add 50 ml of methanol, tightly stopper and weigh. Heat under reflux for 1 hour, cool and weigh again, replenish the lost weight with methanol, shake thoroughly and filter, use the successive filtrate as the test solution.

Procedure Inject accurately 5 μl of each of the reference solution and the test solution into the column, and calculate the content.
It contains not less than 4.5 mg of puerarin ($C_{21}H_{20}O_9$) per gram, referred to Radix Puerariae Lobatae.

Action To expel pathogenic factors from the muscles and skin, clear *heat* to reduce *toxicity* and drain *dampness* to stop diarrhea.

Indications Diarrhea, abdominal pain, yellow and sticky stools, burning sensation in the anus due to accumulation of *damp-heat*; common cold due to *wind-heat* with manifestations of fever, aversion to *wind*, headache and general pain.

Usage and dosage 3 g, 1 g for children, 3 times a day, or follow doctor's advice.

Strength 1 g per pack

Storage Preserve in tightly closed containers.

Gejie Dingchuan Wan
(蛤蚧定喘丸)

Gejie Dingchuan Pills

Ingredients Gecko 11 g; Semen Trichosanthis 50 g; Radix et Rhizoma Asteris 75 g; Herba Ephedrae 45 g; Carapax Trionycis (processed with vinegar) 50 g; Radix Scutellariae 50 g; Radix et Rhizoma Glycyrrhizae 50 g; Radix Ophiopogonis 50 g; Rhizoma Coptidis 30 g; Bulbus Lilli 75 g; Fructus Perillae (stir-baked) 25 g; Gypsum Fibrosum 25 g; Semen Armeniacae Amarum (stir-baked) 50 g; Gypsum Fibrosum (calcined) 25 g.

Procedure Pulverize the above fourteen ingredients to fine powder, sift and mix well. To each 100 g of the powder add 10-25 g of refined honey and a quantity of water, make water-honeyed pills and dry. Alternatively, add 70-100 g of refined honey to make small honeyed pills or big honeyed pills.

Description Brown to brownish-black water-honeyed pills, blackish-brown small honeyed pills or big honeyed pills; odour, slight; taste, bitter and sweet.

Identification (1) Microscopical: Stomata characteristic, guard cells dumbbell-shaped in lateral view. Muscle fibres pale yellow, with fine and dense transverse striations in parallel and sinuous form, and arranged in light and dark alternately. Fibres pale yellow, fusiform, with thickened walls and fine pit-canals. Bast fibres bundles bright yellow,

with slightly thickened walls and distinct pits; stone cells bright yellow.

(2) Grind well 2 g of small or big honeyed pills, cut into pieces, with 1 g of kieselguhr, or pulverize 1.3 g of the water-honeyed pills, apply to a column (20 mm in diameter) packed with aluminium oxide (100-200 mesh, 5 g), elute with 50 ml of dehydrated ethanol. Collect the eluate evaporate to dryness, dissolve the residue in 2 ml of ethanol, filter and use the filtrate as the test solution. To 50 mg of Rhizoma Coptidis reference drug, add 5 ml of methanol, ultrasonicate for 15 minutes, filter and use the filtrate as the reference drug solution. Dissolve a quantity of berberine hydrochloride CRS in methanol to produce a solution containing 0.5 mg per ml as the reference solution. Carry out the method for thin layer chromatography (Appendix Ⅵ B), using silica gel G as the coating substance and a mixture of benzene, ethyl acetate, methanol, isopropanol and strong ammonia (12 : 6 : 3 : 3 : 1) as the mobile phase. Apply separately 1-2 μl of each of the above three solutions to the plate. After developing in a chamber pre-equilibrated with ammonia vapour and removal of the plate, dry in air, examine under ultraviolet light at 365 nm. The yellow fluorescent spots in the chromatogram obtained with the test solution correspond in position and colour to the spots in the chromatogram obtained with the reference drug solution and the reference solution.

(3) To 3 g small or big honeyed pills, cut into pieces and grind well with 1.5 g of kieselguhr, or pulverize 2 g of the water-honeyed pills; add 15 ml of 50% methanol, ultrasonicate for 20 minutes. Filter, evaporate the filtrate to dryness, add 5 ml of methanol to dissolve the residue as the test solution. Dissolve a quantity of baicalin CRS in methanol to produce a solution containing 1 mg per ml as the reference solution. Carry out the method for thin layer chromatography (Appendix Ⅵ B), using silica gel GF_{254} as the coating substance and the upper layer of a mixture of ethyl acetate, butanone, acetate acid and water (10 : 7 : 5 : 3) as the mobile phase. Apply separately 4 μl of each of the above two solutions to the plate. After developing and removal of the plate, dry in air, examine under ultraviolet light at 254 nm. The spot in the chromatogram obtained with the test solution corresponds in position and colour to the spot in the chromatogram obtained with the reference solution; spray with 5% ferric chloride in ethanol acidified with hydrochloric acid, the colour of the corresponding spot turns to greyish-brown.

(4) Grind well 9 g of small or big honeyed pills, cut into pieces, with 5 g of kieselguhr, or pulverize 6 g of the water-honeyed pills; move to a stopper conical flask, add 30 ml of ether and 1 ml of concentrated ammonia, stand for 2 hours, and shake constantly. Filter, wash the drug residue with three 20-ml quantities of ether and filter. Combine the filtrates, add 1 ml of the mixture of hydrochloric acid and ethanol (1→20), mix well, evaporate to dryness. Dissolve the residue in 1 ml of methanol as the test solution. Dissolve a quantity of ephedrine hydrochloride CRS in methanol to produce a solution containing 1 mg per ml as the reference solution. Carry out the method for chromatography (Appendix Ⅵ B), using silica gel G mixed with sodium carboxymethyl cellulose as the coating substance and a mixture of chloroform, methanol and concentrated ammonia TS (40 : 7 : 1) as the mobile phase. Apply separately 4 μl of each of the two solutions to the plate. After developing and removal of the plate, dry in air, spray with ninhydrin TS, heat at 80℃ to spots clear. The spot in the chromatogram obtained with the test solution corresponds in position and colour to the spot in the chromatogram obtained with the reference solution.

Other requirements Comply with the general requirements for pills (Appendix Ⅰ A).

Assay Carry out the method for high performance liquid chromatography (Appendix Ⅵ D).

Chromatographic system and system suitability Use octadecylsilane bonded silica gel as the stationary phase and a mixture of methanol, water and phosphoric acid (45 : 55 : 0.2) as the mobile phase. As detector a spectrophotometer set at 276 nm. The number of theoretical plates of the column is not less than 5000, calculated with the reference to the peak of baicalin.

Reference solution Dissolve a quantity of baicalin CRS, accurately weighed, in 70% ethanol to prepare a solution containing 50 μg per ml as the reference solution.

Test solution Pulverize 0.5 g of the water-honeyed pills to fine power, weighed accurately, or cut 0.8 g of the small honeyed pills or 0.8 g of the big honeyed pills obtained in the test of weight variation into pieces, weighed accurately, to a 100 ml stopper conical flask accurately add 50 ml of 70% ethanol, and weigh. After macerate warmly for 1 hour, heat under reflux for 30 minutes, cool and weigh again, replenish the lost weight with 70% ethanol, shake thoroughly and filter, use the successive filtrate as the test solution.

Procedure Inject accurately 10 μl of each of the reference solution and the test solution into the column, and calculate the content.

It contains not less than 3.0 mg of baicalin ($C_{21}H_{18}O_{11}$) per gram for water-honeyed pills, and 3.3 mg per gram for small honeyed pills, and 30.0 mg per big honeyed pill, referred to Radix Scutellariae.

Action To nourish *yin* and clear the lung, and relieve coughing and asthma/dyspnea.

Indications Cough resulting from consumption, shortness of breath, fullness in the chest, spontaneous perspiration or night sweat due to deficiency in the lung and kidney or excessive *lung-heat* caused by *yin* deficiency.

Usage and dosage 5-6 g of water-honeyed pills, 9 g of small honeyed pills or 1 big honeyed pill, twice a day.

Strength 9 g per 60 small honeyed pills, 9 g per big honeyed pill

Storage Perserve in tightly closed containers.

Gengnian'an Pian (更年安片)

Gengnian'an Tablets

Ingredients Radix Rehmanniae; Rhizoma Alismatis; Radix Ophiopogonis; Radix Rehmanniae Praeparata; Radix Scrophulariae; Poria; Rhizoma Curculiginis; Magnetitum; Cortex Moutan; Concha Margaritifera; Fructus Schisandrae Chinensis seu Fructus Schisandrae Sphenantherae; Caulis Polygoni Multiflori; Radix Polygoni Multiflori Praeparata Cum Succo Glycines Sotae; Fructus Tritici Levis; Ramulus Uncariae cum Uncis.

Procedure Pulverize Fructus Tritici Levis, Magnetitum and Concha Margaritifera to fine powder and sift for latter use. Decoct Radix Rehmanniae, Radix Rehmanniae Praeparata, Radix Scrophulariae, Poria, Rhizoma Curculiginis and Radix Ophiopogonis twice with water (3 hours, 2 hours respectively) and filter. Concentrate the filtrate to a thin extract with a relative density of 1.20. To Fructus Schisandrae Chinensis seu Fructus Schisandrae Sphenantherae, Caulis Polygoni Multiflori, Radix Polygoni

Multiflori Praeparata Cum Succo Glycines Sotae, Rhizoma Alismatis, Cortex Moutan and Ramulus Uncariae cum Uncis, carry out the method for percolation described under liquid extracts and extracts (Appendix I O), using 60% ethanol as solvent to take percolating. Recover ethanol from the percolation, concentrate to a thin extract with a relative density of 1.20. Mix well the above two thin extracts and the fine powder, make to coarse granules, dry, pulverize and sift. Make granules and dry at a low temperature, sift, add magnesium stearate, mix well, make to tablets and coat with sugar.

Description Sugar coated tablets with blackish-grey core; taste, sweet.

Identification (1) Remove the sugar coats of 20 tablets, pulverize, and heat under reflux with 30 ml of chloroform on a water bath for 90 minutes. Filter, evaporate the filtrate to dryness, dissolve the residue in 1 ml of chloroform as the test solution. Prepare a solution of 0.5 g of Fructus Schisandrae reference drug in the same manner as the reference drug solution. Dissolve a quantity of deoxyschizandrin CRS in chloroform to produce a solution containing 1 mg per ml as the reference solution. Carry out the method for thin layer chromatography (Appendix VI B), using silica gel GF_{254} as the coating substance and the upper layer of a mixture of petroleum ether (30-60 ℃), ethyl formate and formic acid (15 : 5 : 1) as the mobile phase. Apply separately 4 μl of each of the three solutions to the plate. After developing and removal of the plate, dry in air and examine under ultraviolet light at 254 nm. The spots in the chromatogram obtained with the test solution correspond in position and colour to the spots in the chromatograms obtained with the reference drug solution and the reference solution.
(2) Remove the sugar coats of 16 tablets, pulverize, heat under reflux with 100 ml of methanol on a water bath for 1 hour, filter, and evaporate the filtrate to dryness. Dissolve the residue in 10 ml of water, add 2 ml of hydrochloric acid, heat on a water bath for 30 minutes, cool immediately and extract with two 20-ml quantities of ether. Combine the ether extracts, evaporate to dryness, dissolve the residue in 1 ml of chloroform as the test solution. Prepare a solution of 1.5 g of Radix Polygoni Multiflori reference drug in the same manner as the reference drug solution. Dissolve a quantity of emodin and physcion CRS in methanol to produce a mixture containing 1 mg of each per ml as the reference solution. Carry out the method for thin layer chromatography (Appendix VI B) using silica gel G mixed with 0.5% solution of sodium hydroxide as the coating substance and a mixture of toluene, ethyl acetate and formic acid (15 : 2 : 1) as the mobile phase. Apply separately 2 μl of each of the three solutions to the plate. After developing and removal of the plate, dry in air and examine under ultraviolet light at 365 nm. The orange fluorescent spots in the chromatogram obtained with the test solution correspond in position and colour to the spots in the chromatograms obtained with the reference drug solution and the reference solution. The colour of the spots turns to red on exposure to ammonia vapour.

Other requirements Comply with the general requirements for tablets (Appendix I D).

Assay Carry out the method for high performance liquid chromatography (Appendix VI D).

Chromatographic system and system suitability Use octadecylsilane bonded silica gel as the stationary phase and a mixture of acetonitrile, water and glacial acetic acid (60 : 40 : 1) as the mobile phase. As detector a spectrophotometer set at 437 nm. The number of theoretical plates of the column is not less than 3000, calculated with the reference of the peak of emodin.

Reference solution Dissolve a quantity of emodin CRS, accurately weighed, in methanol to produce a solution containing 12.5 μg per ml as reference solution.

Test solution Take 20 tablets, removed the coats, weigh accurately and grind to fine powder. Place 5 g of the fine powder, weighed accurately, in a stopper conical flask, add accurately 50 ml of methanol, closely stopper and weigh accurately. Heat under reflux for 30 minutes, allow to cool, weigh accurately again, replenish the lost weight with methanol, stir well and filter. Measure accurately 25 ml of the successive filtrate, concentrate in vacuum to dryness. To the residue add 20 ml of water, 2 ml of hydrochloric acid, and 20 ml of chloroform, heat under reflux for 30 minutes and allow to cool. Separate the chloroform layer and extract again with three 10-ml quantities of chloroform. Combine the chloroform solutions, concentrate in vacuum to dryness. Transfer the residue with methanol to a 25 ml volumetric flask, dilute with methanol to volume and mix well, filter, and use the successive filtrate as the test solution.

Procedures Inject accurately 20 μl of each of the reference solution and test solution into the column, and calculate the content.
It contains not less than 25 μg of emodin ($C_{15}H_{10}O_5$) per tablet.

Action To nourish *yin* and clear *heat*, relieve restlessness and anchor the mind.

Indications Syndromes around menopause due to a deficiency of *kidney-yin* with manifestations of tidal sweating, dizziness, tinnitus, feverish feeling in palms and soles, restlessness; menopausal syndrome with above symptoms.

Usage and dosage 6 tablets, 2-3 times a day.

Storage Preserve in tightly closed containers.

Gentongping Keli (根痛平颗粒)

Gentongping Granules

Ingredients Radix Paeoniae Alba 200 g; Radix Puerariae Lobatae 50 g; Semen Persicae (rinsed in boiling water) 50 g; Flos Carthami 50 g; Olibanum (stir-baked with vinegar) 50 g; Myrrha (stir-baked with vinegar) 50 g; Radix Dipsaci 75 g; Rhizoma Cibotii (scalded) 75 g; Herba Lycopodii 75 g; Radix Achyranthis Bidentatae 50 g; Radix Rehmanniae 50 g; Radix et Rhizoma Glycyrrhizae 25 g.

Procedure Decoct the above twelve ingredients with water 3 times, one and half hours for the first time, 1 hour for the second and third time; filter, combine the filtrate; concentrate the filtrate in vacuum to an appropriate amount. Add a quantity of sucrose and dextrin, mix thoroughly, and dry; pulverize to fine powder, make granules, dry and make to 1000 g. Or add a quantity of dextrin and 3.3 g of stevioside, mix thoroughly, make granules, dry and make to 650 g.

Description Brown or dark brown granules; odour, aromatic; taste, sweet and slightly bitter.

Identification (1) Heat under reflux 2 g of the granules (with sucrose) or 1.4 g of the granules (without sucrose), with 30 ml ethanol for 1 hour; filter, evaporate the filtrate to dryness, dissolve the residue in 1 ml of methanol as the test solution. Dissolve a quantity of paeoniflorin CRS in methanol to produce a solution containing 1 mg per ml as the reference solution. Carry out the method for thin layer chromatography (Appendix VI B), using silica gel G as the coating substance and a mixture of chloroform, ethyl

acetate, methanol and formic acid (40 : 5 : 10 : 0.2) as the mobile phase. Apply separately 5 μl of each of the test solution and the reference solution to the plate. After developing and removal of the plate, dry in air. Spray with 5% vanillin in sulfuric acid and heat at 105℃ to the spots clear. The spot in the chromatogram obtained with the test solution corresponds in position and colour to the spot in the chromatogram obtained with the reference solution.
(2) Dissolve a quantity of puerarin CRS in methanol to produce a solution containing 1 mg per ml as the reference solution. Carry out the method for thin layer chromatography (Appendix Ⅵ B), using silica gel G as the coating substance and a mixture of chloroform, methanol and water (14 : 5 : 0.5) as the mobile phase. Apply separately 10 μl of each of the reference solution and the test solution, obtained under Identification (1), to the plate. After developing and removal of the plate, dry in air. Spray with 0.5% solution of sodium hydroxide, and examine under ultraviolet light at 365 nm. The fluorescent spot in the chromatogram obtained with the test solution corresponds in position and colour to the spot in the chromatogram obtained with the reference solution.

Other requirements Comply with the general requirements for granules (Appendix Ⅰ C).

Assay Carry out the method for high performance liquid chromatography (Appendix Ⅵ D).

Chromatographic system and system suitability Use octadecylsilance bonded silica gel as the stationary phase and a mixture of isopropanol, methanol, acetic acid and water (1 : 23 : 1 : 75) as the mobile phase. As detector a spectrophotometer set at 230 nm. The number of theoretical plates of the column is not less than 2500, calculated with the reference to the peak of paeoniflorin.

Reference solution Dissolve a quantity of paeoniflorin CRS, accurately weighed, in methanol to produce a solution containing 50 μg per ml.

Test solution Triturate a quantity of granules, obtained under the test of weight variation, to fine powder. Weigh accurately 1 g (with sucrose) or 0.7 g (without sucrose) of the granules, place to a stopper conical flask, add accurately 25 ml methanol, stopper tightly and weigh; heat under reflux for 2 hours, allow to stand to cool, weigh again; replenish the lost weight with the methanol and mix well. Filter, and use the successive filtrate as the test solution.

Procedure Inject accurately 10 μl of each of the reference solution and the test solution into the column, and calculate the content.
It contains not less than 9.6 mg of paeoniflorin ($C_{23}H_{28}O_{11}$) per pack, referred to Radix Paeoniae Alba.

Action To promote blood circulation, dredge meridians to kill pain.

Indications Cervical spondylopathy and disorders of lumbar vertebrae due to blockage of meridians by *wind-cold* with manifestations of pain in the immobilized shoulders and neck and numb arms.

Usage and dosage 1 pack, twice a day; taken with boiled water after meals; or follow doctor's advice.

Precaution Take it after meals as it mildly irritates the stomach and intestine tract. It is forbidden to prescribe to pregnant women.

Strength (1) 12 g per pack (with sucrose)
(2) 8 g per pack (without sucrose)

Storage Preserve in tightly closed containers.

Gonglao Quhuo Pian
(功劳去火片)

Gonglao Quhuo Tablets

Ingredients Caulis Mahoniae 604 g; Cortex Phellodendri Chinensis 302 g; Radix Scutellariae 302 g; Fructus Gardeniae 302 g.

Procedure Pulverize 100 g of Cortex Phellodendri Chinensis to fine powder. Decoct the remained portion of Cortex Phellodendri Chinensis and Caulis Mahoniae three times, each 2 hours, combine the decoctions, filter, and concentrate the filtrate to a thick extract. Decoct Radix Scutellariae and Fructus Gardeniae twice, each 2 hours, combine the decoctions, filter, and concentrate the filtrate to a thick extract. Add the fine powder of Cortex Phellodendri Chinensis to the above two thick extracts respectively, mix well, dry and pulverize to fine powder. Mix well the two fine powder to make granules, make to 1000 tablets, coat with sugar; or make to 600 tablets, and coat with film.

Description Sugar coated or film coated tablets with brownish-yellow to brown core; taste, bitter.

Identification (1) Microscopical: Fibre bundles bright yellow, surrounded by cells containing prisms of calcium oxalate, forming crystal fibres, walls of crystal cells lignified and thickened.
(2) Pulverize 5 tablets, removed the coats, ultrasonicate 0.6 g of the powder with 10 ml of ethanol for 15 minutes, filter, and evaporate the filtrate to dryness. Dissolve the residue in 15 ml of water, adjust pH to 2-3 with hydrochloric acid, and extract by shaking with two 10-ml quantities of ethyl acetate, combine the ethyl acetate extracts, evaporate to dryness, and dissolve the residue in 2 ml of methanol as the test solution. Dissolve a quantity of baicalin CRS in methanol to produce a solution containing 1 mg per ml as the reference solution. Carry out the method for thin layer chromatography (Appendix Ⅵ B), using silica gel G mixed with sodium carboxymethylcellulose as the coating substance and the upper layer of a mixture of ethyl acetate, acetone, acetic acid and water (10 : 4 : 5 : 3) as the mobile phase. Apply separately 3-5 μl of each of the two solutions to the plate. After developing and removal of the plate, dry in air and spray with a 2% ferric chloride in ethanol. The spot in the chromatogram obtained with the test solution corresponds in position and colour to the spot in the chromatogram obtained with the reference solution.
(3) Grind 5 tablets, removed the coats, to fine powder, extract 0.6 g with 10 ml of ethanol under reflux for 10 minutes. Allow to cool, filter, and use the filtrate as the test solution. Dissolve a quantity of geniposide CRS in methanol to produce a solution containing 1 mg per ml as the reference solution. Carry out the method for thin layer chromatography (Appendix Ⅵ B), using silica gel G mixed with sodium carboxymethylcellulose as the coating substance and a mixture of chloroform and methanol (7 : 2) as the mobile phase. Apply separately 5-10 μl of each of the two solutions to the plate. After developing and removal of the plate, dry in air and spray with a solution of sulfuric acid and ethanol (5→10), heat at 105℃ to the spots clear. The spot in the chromatogram obtained with the test solution corresponds in position and colour to the spot in the chromatogram obtained with the reference solution.

Other requirements Comply with the general requirements for tables (Appendix Ⅰ D).

Assay Carry out the method of high performance liquid

chromatography (Appendix Ⅵ D).

Chromatographic system and system suitability Use the octadecylsilane bonded silica gel as the stationary phase and a mixture of acetonitrile, water, glacial acetic acid and triethylamine (34 : 64 : 1 : 1) as the mobile phase. As detector a spectrophotometer set at 265 nm. Maintain the column temperature at 30℃. The number of the theoretical plates of the column is not less than 4000, calculated with the reference to the peak of berberine hydrochloride.

Reference solution Dissolve a quantity of berberine hydrochloride CRS, accurately weighed, in methanol to produce a solution containing 30 μg per ml as the reference solution.

Test solution Weigh accurately 10 tablets with coating removed, grind well, weigh accurately 0.1 g in a stopper conical flask, add accurately 50 ml of a mixture of hydrochloric acid and 60% methanol (1 : 100), stopper tightly and weigh. Heat on a water bath at 70℃ for 45 minutes, allow to cool, weigh again, replenish the lost weight with methanol, shake well, filter, and use the successive filtrate as the test solution.

Procedure Inject accurately 10 μl of each of the reference solution and the test solution into the column, and calculate the content.

It contains not less than 1.5 mg of berberine hydrochloride ($C_{20}H_{18}ClNO_4$) per sugar coated tablets, or 2.5 mg per film coated tablet, referred to Cortex Phellodendri Chinensis and Caulis Mahoniae.

Action To clear *heat* and *toxicity*.

Indications Acute pharyngitis, cholecystitis and enteritis due to excessive *heat* and *fire*.

Usage and dosage 5 sugar-coated tablets or 3 film-coated tablets, 3 times a day.

Precaution It is only for the syndrome of abundant *heat* in the *triple energizer* due to excessive heat and *fire-toxicity*. Be cautious about patients with cold in a deficiency condition, and it is forbidden to prescribe to patients with severe deficiency and cold.

Strength 0.5 g per film-coated tablet

Storage Preserve in tightly closed containers.

Gongxuening Jiaonang (宫血宁胶囊)

Gongxuening Capsules

Gongxuening Capsules are prepared from Rhizoma Paridis.

Procedure Pulverize 2000 g of Rhizoma Paridis to coarse powder, heat under reflux with 4 volume of 70% ethanol for three times, 5 hours for the first time, 4 hours for the second, and 3 hours for the third. Combine the extract, filter, and recover solvent in vacuum to a thick extract. Dissolve the extract, filter separation with ceramic film (0.2 μm), dialysis wash appropriately, and dry the film closure solution by spraying. Sift dry extract through No. 5 sieve, add a quantity of adjuvant, mix thoroughly, and make to 1000 capsules.

Description Capsules with content of pale yellowish brown to grayish brown powder; taste, bitter.

Identification Dissolve 0.13 g of the content with 10 ml of water in a separator, extract with 10 ml of *n*-butanol, wash the extract with 5 ml of water, evaporate to dryness on a water bath, and dissolve the residue with 1 ml of methanol as the test solution. Dissolve a quantity of Chonglou saponin Ⅵ CRS and Chonglou saponin Ⅶ CRS in methanol to produce a mixture containing 1 mg of each per ml as the reference solution. Carry out the method for thin layer chromatography (Appendix Ⅵ B), using silica gel G mixed with sodium carboxymethylcellulose as the coating substance and a mixture of chloroform, ethyl acetate, methanol and water (5 : 4 : 3 : 0.6) as the mobile phase. Apply separately 5 μl of each of the test solution and the reference solution to the plate. After developing and removal of the plate, dry in air, spray with 10% sulfuric acid in ethanol and heat at 100℃ to spots clear. The spots in the chromatogram obtained with the test solution correspond in position and colour to the spots in the chromatogram obtained with the reference solution.

Other requirements Comply with the general requirements for capsules (Appendix Ⅰ L).

Assay Carry out the method for high performance liquid chromatography (Appendix Ⅵ D).

Chromatographic system and system suitability Use octane bonded silica gel as the stationary phase and a mixture of acetonitrile and water (45 : 55) as the mobile phase. As detector a spectrophotometer set at 203 nm. The number of theoretical plates of the column is not less than 5000, calculated with the reference to the peak of Chonglou saponin Ⅵ.

Reference solution Dissolve a quantity of Chonglou saponin Ⅵ CRS, weighed accurately, in methanol to produce a solution containing 0.4 mg of per ml.

Test solution Pulverize the content of 20 capsules to fine powder, weigh accurately 1 g in a stoppered conical flask, add accurately 25 ml of methanol, and weigh. Ultrasonicate (power, 250 W; frequency, 25 kHz) for 40 minutes, stand to cool, weigh again, replenish the lost weight with dilute ethanol, and mix thoroughly. Filter, and use the successive filtrate as the test solution.

Procedure Inject accurately 10 μl of each of the reference solution and the test solution into the column, and calculate the content.

It contains not less than 0.52 mg of Chonglou saponin Ⅵ ($C_{39}H_{62}O_{13}$) per capsule.

Action To cool blood to arrest bleeding, clear *heat* and *dampness*, and resolve stagnated blood to kill pain.

Indications Metrorrhagia and metrostaxis, menorrhagia, hemorrhage due to uterine atony after childbirth or abortion, dysfunctional uterine bleeding due to excessive *heat* in blood, or pain in the lower abdomen, lumbar and sacral regions, and leukorrheal disease due to accumulation of *damp-heat* in chronic pelvic inflammatory disease.

Usage and dosage Hypermenorrhea or dysfunctional uterine: 1-2 pills each time, 3 times a day; cease medication when the bleeding is stopped. Chronic pelvic inflammation: 2 pills each time, 3 times a day. 4 weeks making one course of treatment.

Strength 0.13 g per capsule

Storage Preserve in tightly closed container.

Goupi Gao
(狗皮膏)

Goupi Plaster

Ingredients Radix Aconiti 80 g; Radix Aconiti Kusnezoffii 40 g; Rhizoma et Radix Notopterygii 20 g; Radix Angelicae Pubescentis 20 g; Caulis Sinomenii 30 g; Cortex Periplocae 30 g; Radix Saposhnikoviae 30 g; Radix Smilacis 30 g; Rhizoma Atractylodis 20 g; Fructus Cnidii 20 g; Herba Ephedrae 30 g; Rhizoma Alpiniae Officinarum 9 g; Fructus Foeniculi 20 g; Cortex Ramuli Cinnamomi 10 g; Radix Angelicae Sinensis 20 g; Radix Paeoniae Rubra 30 g; Fructus Chaenomelis 30 g; Lignum Sappan 30 g; Radix et Rhizoma Rhei 30 g; Nodum Pini 30 g; Radix Dipsaci 40 g; Rhizoma Chuanxiong 30 g; Radix Angelicae Dahuricae 30 g; Olibanum 30 g; Myrrha 34 g; Borneolum Syntheticum 17 g; Camphora 34 g; Flos Caryophylli 17 g; Cortex Cinnamomi 11 g.

Procedure Pulverize Olibanum, Myrrha, Flos Caryophylli and Cortex Cinnamomi to fine powder respectively, triturate with the powder of Camphora and Boneolum Syntheticum, sift, mix well. Break all the other ingredients to small pieces, deep-fry with 3495 g of edible vegetable oil, discard the residue, filter, concentrate the oily filtrate until it condenses to pills on dripping. Add 1040-1140 g of Plumbi Oxydum Flavum to the oil, stir well to make plaster and soak it in water. Melt the plaster by gentle heat, add the above powders, stir well and spread on beast-skin or cloth.

Description A black plaster spread on the beast-skin or the cloth.

Other requirements Comply with the general requirements for plasters (Appendix Ⅰ P).

Action To expel *wind* and *cold*, and promote blood circulation to kill pain.

Indications Obstruction of *qi* due to invasion by *wind*, *cold* and *dampness*, and stagnation of *qi* and blood, with manifestations of numbness of the limbs, lower back and leg pain, muscular spasm, or traumatic injury, lumbar sprain, local swelling with pain; cold pain in the stomach and abdomen, dysmenorrhea, morbid leukorrhea or abdominal masses due to retention of *cold* and *dampness*.

Usage and dosage Soften the plaster by heat and apply it to the affected area.

Precaution It is forbidden to apply it to the lower back or abdomen of pregnant women.

Strength Net weight per piece: (1) 12 g (2) 15 g (3) 24 g (4) 30 g

Storage Preserve in well closed containers, stored in a cool and dry place.

Granules Clinopodii
(断血流颗粒 Duanxueliu Keli)

Chinese Clinopodium Granules

Chinese Clinopodium Granules are the granules prepared form Herba Clinopodii.

Procedure Decoct 1200 g of the sections of Herba Clinopodii with water for 2 times, 1.5 hours for the each time. Combine the decoctions, filter, and concentrate the filtrate to form a thin extract with a relative density of 1.15 (80℃), add ethanol to a content of 63% ethanol, stand for 24 hours, mix thoroughly, recover the solvent and concentrate the supernatant to a thin extract with a relative density of 1.25 (80℃). Add a quantity of sucrose, dextrin and stevioside, into the thin extract and mix well, make granules, dry, make to 1000 g of granules.

Description Brownish-yellow to drak brown granules; taste, sweet and slightly bitter.

Identification (1) Pulverize 2 g of the granules, ultrasonicate for 15 minutes with 40 ml of methanol and filter. Evaporate the filtrate to dryness, dissolve the residue in 2 ml of methanol. Apply to a column (1 cm in internal diameter) packed with neutral aluminium oxide (100-200 mesh, 10 g). Elute with 60 ml of 40% methanol, collect the 40% methanol eluate. Evaporate to dryness and dissolve the residue in 30 ml of water, extract with two 20-ml quantities of *n*-butanol saturated with water. Combine the *n*-butanol extracts and evaporate to dryness, and dissolve the residue in 5 ml of methanol as the test solution. Dissolve a quantity of buddlejasaponin Ⅳb CRS in methanol to produce a solution containing 1 mg per ml as the reference solution. Carry out the method for thin layer chromatography (Appendix Ⅵ B), using silica gel G as the coating substance and a mixture of chloroform, methanol, glacial acetic acid and water (7 : 3 : 1 : 0.5) as the mobile phase. Apply separately 1 μl of the test solutions and 2 μl of the reference solution to the plate. After developing and removal of the plate, dry in air. Spray with 1% sulfuric acid in ethanol and heat at 110 ℃ to the spots clear. Examine in daylight. The violet-blue spot in the chromatogram obtained with the test solution corresponds in position and colour to the spot in the chromatogram obtained with the reference solution. Examine under ultraviolet light at 365 nm. The brownish-red fluorescent spot in the chromatogram with the test solution corresponds in position and colour to the spot in the chromatogram obtained with the reference solution.

Other requirements Comply with the general requirements for granules (Appendix Ⅰ C).

Assay Carry out the method for high performance liquid chromatography (Appendix Ⅵ D).

Chromatographic system and system suitability Use octadecylsilane bonded silica gel as the stationary phase and a mixture of methanol and water (80 : 20) as the mobile phase. As detector a spectrophotometer set at 250 nm. The number of the theoretical plates of the column is not less than 3000, calculated with the reference to the peak of buddlejasaponin Ⅳb.

Reference solution Dissolve a quantity of buddlejasaponin Ⅳb CRS, accurately weighed, in methanol to produce a solution containing 10 μg per ml.

Test solution Pulverize granules, obtained under the test of packing variation, to fine powder. Weigh accurately 0.5 g of the above powder, add 30 ml of methanol, ultrasonicate (power, 220 W; frequency, 50 kHz) for 15 minutes, filter. To the drug residue, add 30 ml of methanol, ultrasonicate for 15 minutes, and filter. Combine the filtrates, evaporate to dryness, dissolve the residue in 30 ml of water, transfer to a separator funnel, extract with four 20-ml quantities of *n*-butanol saturated with water. Combine the *n*-butanol extract and wash with 30 ml of ammonia TS saturated with *n*-butanol and wash successive with two 30-ml quantities of water saturated with *n*-butanol. Separate the *n*-butanol extract, evaporate to dryness, dissolve the residue in methanol, and transfer to a 50 ml volumetric flask. Dilute with methanol to volume, mix well, and filter. Use the

successive filtrate as the test solution.

Procedure Inject accurately 10 μl of each of the reference solution and the test solution into the column, and calculate the content.
It contains not less than 7.0 mg of buddlejasaponin Ⅳb ($C_{48}H_{78}O_{18}$) per pack, referred to Herba Clinopodii.

Action To cool blood and arrest bleeding.

Indications Hypermenorrhea, metrorrhagia and metrostaxis, hematemesis, epistaxis, hemoptysis, hematuria and hematochezia marked by bright red or purple dysfunctional; uterine bleeding, bleeding due to hysteromyoma and various kinds of bleeding, simple purpura and primary thrombocytopenic purpura with above symptoms.

Usage and dosage 1 pack, once a day.

Strength 10 g per pack

Storage Preserve in tightly closed containers.

Guanxin Danshen Jiaonang (冠心丹参胶囊)

Guanxin Danshen Capsules

Ingredients Radix et Rhizoma Salviae Miltiorrhizae 200 g; Radix et Rhizoma Notoginseng 200 g; Oleum Lignum Dalbergiae Odoriferae 1.75 ml.

Precedure Pulverize Radix et Rhizoma Notoginseng to fine powder. Pulverize Radix et Rhizoma Salviae Miltiorrhizae to medium powder, carry out the method of percolation as described under liquid and extracts (Appendix Ⅰ O), percolate with 90% ethanol, collect 1400 ml of percolation, recover ethanol, and concentrate to a thick extract. Decoct the drug residue with water for two times, one hour for each, combine the decoction, filter, and concentrate to a quantity. Add the fine powder of Radix Notoginseng, the thick extract and a quantity of starch, mix thoroughly, and make granules. Dry, add Oleum Lignum Dalbergiae Odoriferae, mix thoroughly, and make to 1000 capsules.

Description Capsules with content of brown yellow to brown granules and powder; odour, slightly aromatic; taste, sweet, slightly bitter.

Identification (1) Macerate 1.5 g of the content with 5 ml of methanol for 10 minutes, shake constantly, filter, and use the filtrate as the test solution. Prepare a solution of 1 g of Radix et Rhizoma Notoginseng reference drug in the same manner as the reference drug solution. Carry out the method for thin layer chromatography (Appendix Ⅵ B), using silica gel G mixed with sodium carboxymethyl cellulose as the coating substance and a mixture of ethyl acetate, butanone, formic acid and water (5 ∶ 3 ∶ 1 ∶ 1) as the mobile phase. Apply separately 5-10 μl of the test solution and 5 μl of the reference drug solution to the plate. After developing and removal of the plate, dry in air, spray with 10% sulfuric acid in ethanol and heat to spots distinct. The spots in the chromatogram obtained with the test solution correspond in position and colour to the spots in the chromatogram obtained with the reference drug solution.
(2) Carry out the method of preparation of test solution as described under Identification (1), prepare separately two solutions with 1 g of Radix et Rhizoma Salviae Miltiorrhizae reference drug and 0.5 g of Lignum Dalbergiae Odoriferae reference drug as the reference drug solutions. Carry out the method for thin layer chromatography (Appendix Ⅵ B), using silica gel G mixed with sodium carboxymethyl cellulose as the coating substance and a mixture of petroleum ether (60-90℃) and ethyl acetate (8 ∶ 3) as the mobile phase. Apply separately 5-10 μl of the test solution obtained under Identification (1) and the above reference drug solutions to the plate. After developing and removal of the plate, and dry in air. The spots in the chromatogram obtained with the test solution correspond in position and colour to the spots in the chromatogram obtained with Radix et Rhizoma Salviae Miltiorrhizae reference drug solution. Spray with 1% vanillin in sulfuric acid, heat to spots distinct. The spots in the chromatogram obtained with the test solution correspond in position and colour to the spots in the chromatogram obtained with Lignum Dalbergiae Odoriferae reference drug solution.

Other requirements Comply with the general requirements for capsules (Appendix Ⅰ L).

Assay Carry out the method for high performance liquid chromatography (Appendix Ⅵ D).

Chromatographic system and system suitability Use octadecylsilane bonded silica gel as the stationary phase and a mixture of methanol and water (75 ∶ 25) as the mobile phase. As detector a spectrophotometer set at 270 nm. The number of theoretical plates of the column is not less than 2000, calculated with the reference to the peak of tanshinone ⅡA.

Reference solution Dissolve a quantities of tanshinone ⅡA CRS, weighed accurately, in an amber volumetric flask, with methanol to produce a solution containing 20 μg of per ml.

Test solution Pulverize the granules, obtained under the test of packing variation, to fine powder, weigh accurately 1 g in a stopper conical flask, add accurately 50 ml of methanol, stopper, weigh, ultrasonicate (power, 250 W; frequency, 33 kHz) for 20 minutes, allow to cool, weigh again, replenish the lost weight with methanol, and mix thoroughly. Filter, and use the filtrate as the test solution.

Procedure Inject accurately 10 μl of each of the reference solution and the test solution into the column, and calculate the content.
It contains not less than 0.3 mg of tanshinone ⅡA ($C_{19}H_{18}O_3$) per capsule, referred to Radix et Rhizoma Salviae Miltiorrhizae.

Action To promote blood circulation to resolve stagnated blood and regulate *qi* flow to kill pain.

Indications Impeded flow of *yang-qi* in the chest due to stagnation of *qi* and blood with manifestations of constriction and stabbing pain in the chest, palpitation and shortness of breath; angina pectoris in coronary heart disease with above symptoms.

Usage and dosage 3 capsules, 3 times a day.

Strength 0.3 g per capsule

Storage Preserve in tightly closed container.

Guanxin Danshen Pian (冠心丹参片)

Guanxin Danshen Tablets

Ingredients Radix et Rhizoma Salviae Miltiorrhizae 200 g; Radix et Rhizoma Notoginseng 200 g; Oleum Dalbergiae Odoriferae 1.75 ml.

Procedure Pulverize the Radix et Rhizoma Notoginseng to fine powder. Pulverize the Radix et Rhizoma Salviae Miltiorrhizae to powder, carry out the percolation as described under the liquid extracts and extract (Appendix Ⅰ O), use 90% ethanol as the solvent, concentrate the percolate to a thick extract. Decoct the residue with water

twice, each for 1 hour, combine the decoctions, filter. Concentrate the filtrate to an appropriate quantity, add the above fine powder of the Radix et Rhizoma Notoginseng, thick extract, and an appropriate quantity of excipient, mix, make granules and dry. Add Oleum Dalbergiae Odoriferae, mix well, make to 1000 tablets and coat with sugar.

Description Sugar coated tablets with brown core; odour, slightly aromatic; taste, sweet, slightly bitter.

Identification (1) Macerate 5 tablets, removed sugar coats and pulverized to fine podwer, in 5ml methanol for 10 minutes, shake constantly. Filter and use the filtrate as the test solution. Prepare a solution of 1 g of Radix et Rhizoma Notoginseng reference drug in the same manner as the reference drug solution. Carry out the method for thin layer chromatography (Appendix Ⅵ B), using silica gel G mixed with sodium carboxymethyl cellous as the coating substance and a mixture of ethyl acetate, butanone, formic acid and water (5 : 3 : 1 : 1) as the mobile phase. Apply separately 5-10 μl of each of the two solutions to the plate. After developing and removal of the plate, dry in air, spray with 1% vanillin solution in sulfuric acid, heat to spots clear. The spots in the chromatogram obtained with the test solution correspond in position and colour to the spots in the chromatogram obtained with the reference drug solution.
(2) To 1 g of Radix et Rhizoma Salviae Miltiorrhizae reference drug and 0.5 g of Lignum Dalbergiae Odoriferae reference drug, carry out the method as described under Identification (1) of the test solution preparation, prepare separately two kinds of solutions as the reference drug solutions. Carry out the method for thin layer chromatography (Appendix Ⅵ B), using silica gel H mixed with sodium carboxymethyl cellous as the coating substance and a mixture of petroleum ether (60-90℃) and ethyl acetate (8 : 3) as the mobile phase. Apply separately 5-10 μl of each of the test solution obtained under Identification test (1) and the two reference drug solutions to the plate. After developing and removal of the plate, dry in air. The spots in the chromatogram obtained with the test solution correspond in position and colour to the spots in the chromatogram obtained with Radix Salviae Miltiorrhizae reference drug solution. Spray with 1% solution of vanillin in sulfuric acid, heat to spots clear. The spots in the chromatogram obtained with the test solution correspond in position and colour to the spots in the chromatogram obtained with Lignum Dalbergiae Odoriferae reference drug solution.

Other requirements Comply with the general requirements for tablets (Appendix Ⅰ D).

Action To promote blood circulation to resolve stagnated blood, and regulate *qi* flow to kill pain.

Indications Impeded flow of *yang-qi* in the chest due to stagnation of *qi* and blood with manifestations of constriction and stabbing pain in the chest, palpitation and shortness of breath; angina pectoris in coronary heart disease with above symptoms.

Usage and dosage 3 tablets, 3 times a day.

Storage Preserve in tightly closed containers.

Guanxin Suhe Wan
(冠心苏合丸)

Guanxin Suhe Pills

Ingredients Styrax 50 g; Borneolum Syntheticum 105 g; Olibanum (processed) 105 g; Lignum Santali Albi 210 g; Radix Inulae 210 g.

Procedure Pulverize the above ingredients, except Styrax and Borneolum Syntheticum, to fine powder, sift; pulverize Borneolum Syntheticum to fine powder, mix well with the powder of the above three ingredients and sift. To a quantity of refined honey, heat gently, add Styrax, stir well, mix with the above powder to make to 1000 pills or pulverize Borneolum Syntheticum to fine power, mix well with the fine powder of a mixture of Olibanum (processed), Lignum Santali Albi and Radix Inulae to make pill cores. To the pill cores, add the remnant fine powder, Styrax, and a quantity of refined honey to make to 1000 pills.

Description Dark brown to brown big honeyed pills; odour, aromatic; taste, bitter and cool.

Identification (1) Microscopical: Crystal cells square or rectangular, walls thickened, lignified, lumina containing prisms of calcium oxalate.
(2) Cut two pills into pieces, add 50 ml of ether, ultrasonicate for 20 minutes, filter and evaporate the filtrate to dryness. Dissolve the residue in 1 ml of ether and apply to a column (1.5 cm in diameter) packed with neutral aluminium oxide (100-200 mesh, 8 g), elute with 80 ml of ether, and collect the eluates. Evaporate to dryness on a water bath and dissolve the residue in petroleum ether (60-90℃) as the test solution. Dissolve Styrax reference drug in petroleum ether (60-90℃) to prepare a solution containing 25 μl per ml as the reference drug solution. Carry out the method for thin layer chromatography (Appendix Ⅵ B), using high performance silica gel GF_{254} as the coating substance and a mixture of petroleum ether (30-60℃), hexane, ethyl formate and formic acid (10 : 30 : 15 : 1) as the mobile phase. Apply separately 3 μl of each of the test solution and the reference solution to the plate. After developing and removal of the plate, dry in air. Examine under ultraviolet light at 254 nm. The main spots in the chromatogram obtained with the test solution correspond in position and colour to the main spots in chromatogram obtained with the reference drug solution. Macerate the plate in 10% sulfuric acid in ethanol for a moment, removal of the plate, dry in air, heat at 105℃ to the spots distinct. Examine under ultraviolet light at 254 nm. The main fluorescent spots in the chromatogram obtained with the test solution correspond in position and colour to the main fluorescent spots in chromatogram obtained with the reference drug solution.

Other requirements Comply with the general requirements for pills (Appendix Ⅰ A).

Assay ***Borneolum Syntheticum*** Carry out the method for gas chromatography (Appendix Ⅵ E).

Chromatographic system and system suitability Use 10% polyethylene glycol (PEG)-20M as the stationary phase and maintain the column temperature at 140℃. The number of theoretical plates of the column is not less than 1200, calculated with the reference of the peak of pentadecane.

Determination of correction factor Dissolve a quantity of pentadecane, accurately weighed, in ethyl acetate to prepare the internal standard solution containing 7 mg per ml. Place 10 mg of a mixture of (±)-borneol and (±)-isoborneol CRS, accurately weighed, in a 5 ml volumetric flask, add exactly 1 ml of internal standard solution, dilute with ethyl acetate to volume, mix well. Inject exactly 1 μl into the column and calculate the correction factor.

Procedures Grind well 10 pills, accurately weighed; or weigh accurately 10 pills, take a quarter from each pill, combine, weigh accurately, add accurately an equal portion of kieselguhr and grind well. Place a sufficient powder (equivalent to 12 mg of Borneolum Syntheticum), weighed accurately, in a stopper test tube, add exactly 1 ml of the

internal standard solution and 4 ml of ethyl acetate, stopper well, shake to dissolve Borneolum Syntheticum, and allow to stand. Inject 1 μl of the supernatant into the column and measure the sum peak area of (±)-borneol and (±)-isoborneol, calculate the content.
It contains not less than 80.0 mg and not more than 120.0 mg of the mixture of (±)-borneol and (±)-isoborneol per pill.

Radix Inulae Carry out the method for gas chromatography (Appendix Ⅵ E).

Chromatographic system and system suitability Use polyethylene glycol (PEG)-20M as the stationary phase, capillary column (0.25 mm in internal diameter, 30 meter long and 0.25 μm film thickness). Column temperature gradient: initial temperature at 220℃, maintain 15 minutes; increase at 80℃ per minute to 240℃, then maintain 20 minutes. The number of theoretical plates of the column is not less than 40000, calculated with the reference to the peak of alantolactone.

Reference solution Dissolve a quantity of alantolactone CRS, accurately weighed, in ethyl acetate to produce a solution containing 0.2 mg per ml as the reference solution.

Test solution To 10 pills, accurately weighed, grind well, weigh 4 g accurately, or weigh accurately 10 pills, take a quarter from each pill, combine, weigh accurately, add accurately an equal portion of kieselguhr and grind well. Place a sufficient power (equivalent to 5 mg of alantolactone), weighed accurately, in a stopper conical flask, add exactly 25 ml of ethyl acetate, stopper tightly, and weigh. Ultrasonicate (power, 300 W; frequency, 50 kHz) for 30 minutes, allow to stand to room temperature, weigh again, replenish the lost weight with ethyl acetate, shake thoroughly and filter, use the successive filtrate as the test solution.

Procedure Inject accurately 1 μl of each of the reference solution and the test solution into the column, and calculate the content.
It contains not less than 0.90 mg of alantolactone ($C_{15}H_{20}O_2$) per pill, referred to Radix Inulae.

Action To regulate *qi* and soothe the chest, and kill pain.

Indications Impeded flow of *yang-qi* in the chest due to cold retention, *qi* stagnation and block of the *Heart Meridian* with manifestations of constriction in the chest, precordial pain, light purple tongue; angina pectoris in coronary heart disease with above symptoms.

Usage and dosage 1 pill, 1-3 times a day, or follow doctor's advice; taken orally by chewing.

Precaution Contraindicated for pregnant women.

Storage Preserve in tightly closed containers.

Guben Kechuan Pian
(固本咳喘片)

Guben Kechuan Tablets

Ingredients Radix Codonopsis 151 g; Rhizoma Atractylodis Macrocephalae (processed with bran) 151 g; Poria 100 g; Radix Ophiopogonis 151 g; Fructus Psoraleae (processed with salt) 151 g; Radix et Rhizoma Glycyrrhizae Praeparata Cum Melle 75 g; Fructus Schisandrae Chinensis (processed with vinegar) 75 g.

Procedure Pulverize 34.5 g of Poria to fine powder, decoct the remained portion of Poria and the other six ingredients three times (3 hours, 2 hours and 1 hour respectively), filter and combine the decoctions, allow to stand for 24 hours, separate the supernatant, filter, concentrate in vacuum to a quantity, and allow to cool. Add the above fine powder and a quantity of dextrin, mix well, dry at a lower temperature and grind into fine powder. Add a quantity of starch and cerealose, make granules, make to 1000 tablets and coat with film.

Description Film coated tablets with brown core; taste, sweet, slightly sour, bitter, and slightly astringent.

Identification (1) Microscopical: Irregular branched masses colourless, dissolved in chloral hydrate TS, hyphae colourless or brownish, 4-6 μm in diameter.
(2) Grind 10 tablets to fine powder, ultrasonicate with 10 ml of ethanol for 15 minutes, filter, and use the filtrate as the test solution. Dissolve a quantity of psoralen CRS and isopsoralen CRS separately in ethanol to produce two solutions each containing 0.5 mg per ml as the reference solutions. Carry out the method for thin layer chromatography (Appendix Ⅵ B), using silica gel G mixed with sodium carboxymethyl cellulose as the coating substance and a mixture of hexane and ethyl acetate (4 : 1) as the mobile phase. Apply separately 4 μl of the test solution and 2 μl of each of reference solutions to the plate. After developing and removal of the plate, dry in air and spray with a 10% potassium hydroxide in methanol, and examine under ultraviolet light at 365 nm. The fluorescent spots in the chromatogram obtained with the test solution correspond in position and colour to the spots in the chromatogram obtained with the reference solutions.
(3) Grind 10 tablets to fine powder, ultrasonicate with 30 ml of ethanol for 30 minutes, filter, and evaporate the filtrate to dryness. Dissolve the residue in 30 ml of water, extract by shaking with two 30-ml quantities of ether, discard the ether extracts, then extract the aqueous solution by shaking with two 30-ml quantities of *n*-butanol saturated with water. Combine the *n*-butanol extract, wash with two 30-ml quantities of water saturated with *n*-butanol, evaporate to dryness, and dissolve the residue in 1 ml of methanol as the test solution. Decoct 1 g of Radix et Rhizoma Glycyrrhizae reference drug with 50 ml of water for 30 minutes, cool, filter, and evaporate the filtrate to dryness. Dissolve the residue in 30 ml of ethanol by ultrasonicating, filter, evaporate the filtrate to dryness and dissolve the residue in 1 ml of methanol as the reference drug solution. Carry out the method for thin layer chromatography (Appendix Ⅵ B), using silica gel G mixed with 1% solution of sodium hydroxide as the coating substance and a mixture of ethyl acetate, formic acid, glacial acetic acid and water (15 : 1 : 1 : 2) as the mobile phase. Apply separately 5 μl of each of the two solutions to the plate. After developing and removal of the plate, dry in air and spray with a 10% sulfuric acid in ethanol. Heat at 105℃ to the spots clear, and examine under daylight. The spots in the chromatogram obtained with the test solution correspond in position and colour to the spots in the chromatogram obtained with the reference drug solution. Examine under ultraviolet light at 365 nm. The fluorescent spots in the chromatogram obtained with the test solution correspond in position and colour to the spots in the chromatogram obtained with the reference drug solution.

Other requirements Comply with the general requirements for tablets (Appendix Ⅰ D).

Assay Carry out the method for high performance liquid chromatography (Appendix Ⅵ D).

Chromatography system and system suitability Use octadecylsilane bonded silica gel as the stationary phase and a mixture of methanol and 0.1 mol/L sodium dihydrogen phosphate solution (adjust pH to 7.0 with 30% phosphoric acid) (45 : 55) as the mobile phase. As detector a

spectrophotometer set at 246 nm. The number of theoretical plates of the column is not less than 2000, calculated with the reference to the peak of psoralen.

Reference solution Dissolve respectively a quantity of psoralen CRS and isopsoralen CRS, accurately weighed, in methanol to produce a mixture containing 10 μg of psoralen and 14 μg of isopsoralen per ml as the reference solution.

Test solution Weigh accurately 10 tablets, grind to fine powder, weigh accurately 0.4 g in a stopper conical flask, add 20 ml of methanol, stopper tightly, and weigh. Ultrasonicate (power, 300 W; frequency, 50 kHz) for 40 minutes, cool, weigh again, replenish the lost weight with methanol, shake well, filter, and use the successive filtrate as the test solution.

Procedure Inject accurately 10 μl of each of the reference solution and the test solution into the column, and calculate the content.

It contains not less than 0.3 mg of the total amount of psoralen ($C_{11}H_6O_3$) and isopsoralen ($C_{11}H_6O_3$) per tablet, referred to Fructus Psoraleae.

Action To replenish *qi* to strengthen the superficies, and invigorate the spleen and reinforce the kidney.

Indications Coughing with expectoration of much phlegm, panting, shortness of breath, worse when active due to abundance of phlegm resulting from deficiency in the spleen and insecurity of *kidney-qi*; chronic bronchitis, pulmonary emphysema, bronchial asthma with above symptoms.

Usage and dosage 3 tablets, 3 times a day.

Strength 0.4 g per tablet

Storage Preserve in tightly closed containers.

Guci Xiaotong Pian
(骨刺消痛片)

Guci Xiaotong Tablets

Ingredients Radix Aconiti Praeparata 53.25 g; Radix Aconiti Kusnezoffii Praeparata 53.25 g; Radix Gentianae Macrophyllae 53.25 g; Radix Angelicae Dahuricae 53.25 g; Radix et Rhizoma Glycyrrhizae 53.25 g; Rhizoma Discoreae Hypoglaucae 106.5 g; Rhizoma Discoreae Nipponicae 106.5 g; Semen Coicis 106.5 g; Rhizoma Arisaematis (prepared) 53.25 g; Flos Carthami 106.5 g; Radix Angelicae Sinensis 53.25 g; Radix et Rhizoma Cynanchi Paniculati 159.75 g.

Procedure Pulverize Radix Angelicae Dahuricae, Semen Coicis and Radix Angelicae Sinensis to fine powder. To Radix Aconiti Praeparata, Radix Aconiti Kusnezoffii Praeparata and Radix Gentianae Macrophyllae, add 8 volume of water and adjust the pH value to 3-4 with hydrochloric acid, then decoct twice, 2 hours for each time; filter, reserve the filtrate for later use. Distill Radix Cynanchi Paniculati with steam and collect the distillation for later use. Decoct other 5 ingredients and the drug residue, which together with the remained water solution, with water twice, 2 hours for each time; filter, combine the filtrate with the reserved solution; allow to stand for 24 hours, concentrate the supernatant to thick extract; add the above fine powder and mix thoroughly, dry and pulverize to fine powder. Dilute the distillation with a quantity of ethanol, mix thoroughly with the second fine powder and a quantity of excipient, make granules. Make to 1000 tablets, coated with sugar.

Description Sugar coated tablets with yellowish-brown core; taste, slightly pungent, spicy, and bitter.

Identification (1) Triturate 10 tablets, removed sugar coats, to fine powder; heat under reflux with 40 ml of ether for 30 minutes, filter, evaporate the filtrate to dryness; dissolve the residue in 1 ml of acetone as the test solution. Dissolve a quantity of paeonol CRS in acetone to produce a solution containing 1 mg per ml as the reference solution. Carry out the method for thin layer chromatography (Appendix Ⅵ B), using silica gel G mixed with sodium carboxymethyl cellulose as the coating substance and a mixture of cyclohexane and ethyl acetate (3 : 1) as the mobile phase. Apply separately 10 μl of each of the test solution and the reference solution to the plate. After developing and removal of the plate, dry in air. Spray with 5% ferric chloride in ethanol acidified with hydrochloric acid. The spot in the chromatogram obtained with the test solution corresponds in position and colour to the spot in the chromatogram obtained with the reference solution.

(2) Prepare a solution of 0.5 g of Radix Angelicae reference drug in the same manner as described in the test solution preparation under Identification (1), as the reference drug solution. Carry out the method for thin layer chromatography (Appendix Ⅵ B), using silica gel G mixed with sodium carboxymethyl cellulose as the coating substance and a mixture of petroleum ether (60-90℃) and ethyl acetate (9 : 1) as the mobile phase. Apply separately 10 μl of each of the test solution, obtained under Identification (1), and the reference drug solution to the plate. After developing and removal of the plate, dry in air. Examine under ultraviolet light at 365 nm. The fluorescent spots in the chromatogram obtained with the test solution correspond in position and colour to the spots in the chromatogram obtained with the reference drug solution.

(3) Triturate 10 tablets, removed sugar coats, to fine powder; add 20 ml of a mixture of sulfuric acid and 45% ethanol (7→100), then heat under reflux for 1 hour, allow to stand to cool and filter; extract the filtrate with two 20-ml quantities of petroleum ether (60-90℃), combine the extracts, if the extract appear muddy, centrifuge and use the supernatant. Evaporate the extract to dryness and dissolve the residue in 0.5 ml of ethanol as the test solution. Dissolve a quantity of glycyrrhetinic acid CRS in 1 ml of dehydrated ethanol to produce a solution containing 1 mg per ml as the reference solution. Carry out the method for thin layer chromatography (Appendix Ⅵ B), using silica gel GF_{254} as the coating substance and a mixture of petroleum ether (30-60℃), toluene, ethyl acetate and glacial acidic acid (10 : 20 : 7 : 0.5) as the mobile phase. Apply separately 5 μl of each of the test solution and the reference solution to the plate. After developing and removal of the plate, dry in air. Examine under ultraviolet light at 365 nm. The fluorescent spot in the chromatogram obtained with the test solution corresponds in position and colour to the spot in the chromatogram obtained with the reference solution.

Limit test for aconitine Triturate 15 tablets, removed sugar coats, to fine powder, transfer to a stopper conical flask, add 2 ml of ammonia TS and 30 ml of ether, extract with constantly shaking for 1 hour, allow to stand for 24 hours; filter, evaporate the filtrate to dryness, dissolve the residue in 1 ml of dehydrated ethanol as the test solution. Dissolve a quantity of aconitine CRS, weighed accurately, in dehydrated ethanol to prepare a solution containing 1 mg per ml as the reference solution. Carry out the method for thin layer chromatography (Appendix Ⅵ B), using silica gel G mixed with sodium carboxymethyl cellulose as the coating substance and a mixture of toluene, ethyl acetate and diethylamine (14 : 4 : 1) as the mobile phase. Apply separately 5 μl of the test solution and 10 μl of the reference solution to the

plate. After developing and removal of the plate, dry in air. Spray with dilute potassium iodobismuthate TS. The size of the spot in the chromatogram obtained with the test solution is less than the corresponding spot in the chromatogram obtained with the reference solution, or no spot reveals in the chromatogram obtained with the test solution.

Other requirements Comply with the general requirements for tablets (Appendix Ⅰ D).

Assay Carry out the method for high performance liquid chromatography (Appendix Ⅵ D).

Chromatographic system and system suitability Use octadecylsilance bonded silica gel as the stationary phase and a mixture of methanol and water (50 : 50) as the mobile phase. As detector a spectrophotometer set at 274 nm. The number of theoretical plates of the column is not less than 3000, calculated with the reference to the peak of paeonol.

Reference solution Dissolve a quantity of paeonol CRS, accurately weighed, in ethanol to produce a solution containing 80 μg per ml.

Test solution Place 10 tablets, removed sugar coats, weigh accurately and triturate to fine powder; weigh accurately 1 g of the powder to a stopper conical flask, add accurately 25 ml of ethanol and stopper tightly; weigh, ultrasonicate (power, 160 W; frequency, 50 kHz) for 30 minutes. Allow standing to cool and weigh again, replenish the lost weight with ethanol; mix thoroughly and filter; and use the successive filtrate as the test solution.

Procedure Inject accurately 20 μl of each of the reference solution and the test solution into the column, and calculate the content.

It contains not less than 0.50 mg of paeonol ($C_9H_{10}O_3$) per tablet, referred to Cortex Moutan.

Action To expel *wind* and kill pain.

Indications Obstruction of *qi* and blood with pain due to accumulation of *wind-dampness* and blood stasis blocking meridians with manifestations of painful and immobilized joints, pain of the lower back and knees; bony arthritis, rheumatic arthritis, pain due to rheumatalgia with above symptoms.

Usage and dosage 4 tablets, 2-3 times a day.

Precaution Be cautious about patients with renal diseases.

Storage Preserve in tightly closed containers.

Guifu Dihuang Wan (桂附地黄丸)

Guifu Dihuang Pills

Ingredients Cortex Cinnamomi 20 g; Radix Aconiti Lateralis Preparata 20 g; Radix Rehmanniae Praeparata 160 g; Fructus Corni (processed) 80 g; Cortex Moutan 60 g; Rhizoma Dioscoreae 80 g; Poria 60 g; Rhizoma Alismatis 60 g.

Procedure Pulverize the above eight ingredients to fine powder, sift, mix well. To each 100 g of the powder add 35-50 g of refined honey and a quantity of water to make pills and dry. Alternatively, add 80-110 g of refined honey to make small honeyed pills or big honeyed pills.

Description Blackish-brown water honeyed pills, small honeyed pills or big honeyed pills; taste, sweet with slightly sour and pungent.

Identification (1) Microscopical: Starch granules triangular-ovoid or oblong, 24-40 μm in diameter; hilum short-cleft or V-shaped. Gelatinized masses of starch granules whitish. Irregular branched masses colourless, dissolved in chloral hydrate solution; hyphae colourless or pale brown, 4-6 μm in diameter. Parenchyma greyish-brown to blackish-brown, cells mostly shrunken, and each containing a brown nucleus-like mass. Clusters of calcium oxalate occurring in colourless parenchymatous cells, sometimes several in a row. Epidermic cells of pericarp orange-yellow, subpolygonal in surface view, anticlinal walls slightly beaded. Parenchymatous cells subrounded, with elliptic pits gathered in pit groups. Anticlinal walls of endodermis cells sinuous, somewhat relatively thick, lignified, with sparse and minute pit-canals. Stone cells subsquare or subrounded, 32-88 μm in diameter, with thin walls at one side.

(2) Pulverize 9 g of big or small honeyed pills, or 6 g of water-honeyed pills, add 15 ml of ether, and shake for 15 minutes, stand for 1 hour, filter, evaporate the ether and dissolve the residue in 1 ml of acetone as the test solution. Dissolve a quantity of paeonol CRS in acetone to produce a solution containing 1 mg per ml as the reference solution. Carry out the method for thin layer chromatography (Appendix Ⅵ B), using silica gel G as the coating substance and a mixture of cyclohexane and ethyl acetate (3 : 1) as the mobile phase. Apply in strip separately 10 μl of each of the two solutions to the plate. After developing and removal of the plate, dry in air, spray with 5% ferric chloride in ethanol, acidified with hydrochloric acid, visualize under a current of hot air. The bluish-brown strip in the chromatogram obtained with the test solution corresponds in position and colour to the strip in the chromatogram obtained with the reference solution.

(3) Pulverize 9 g of big or small honeyed pills, or 6 g of water-honeyed pills, add 10 ml of ethanol, shake for 15 minutes, stand for 1 hour, filter, use the filtrate as the test solution. Dissolve a quantity of cinnamaldehyde CRS in ethanol to produce a solution containing 1 μl per ml as the reference solution. Carry out the method for thin layer chromatography (Appendix Ⅵ B), using silica gel G as the coating substance and a mixture of petroleum ether (30-60℃) and ethyl acetate (17 : 3) as the mobile phase. Apply separately 15 μl of the test solution and 2 μl of the reference solution to the plate. After developing and removal of the plate, dry it in air, and spray with alcoholic dinitrophenyl-hydrazine TS. The orange-red spot in the chromatogram obtained with the test solution corresponds in position and colour to the spot in the chromatogram obtained with the reference solution.

Other requirements Comply with the general requirements for pills (Appendix Ⅰ A).

Assay ***Fructus Corni*** Carry out the method for high performance liquid chromatography (Appendix Ⅵ D).

Chromatographic system and system suitability Use octadecylsilane bonded silica gel as the stationary phase, acetonitrile as the mobile phase A, 0.05% phosphoric acid solution as the mobile phase B, elute in gradient as the following:

Time (min)	Mobile phase A (per cent V/V)	Mobile phase B (per cent V/V)
0-20	11	89
20-30	90	10
30-40	11	89

As detector a spectrophotometer set at 236 nm; maintain the column temperature at 30℃. The number of theoretical plates of the column is not less than 4000, calculated with the reference to the peak of loganin.

Reference solution Dissolve a quantity of loganin CRS,

accurately weighed, in methanol to produce a solution containing 20 μg per ml as the reference solution.

Test solution Weigh accurately 1 g of water-honeyed pills, pulverized to the fine powder; or weigh accurately 1 g of small honeyed pills or 1 g of big honeyed pills obtained in the test of weight variation, cut into pieces and mix well, to a stopper conical flask, and accurately 50 ml of methanol, stopper well and weigh. Ultrasonicate (power, 250 W; frequency, 33 kHz) for 45 minutes, allow to stand to room temperature and weigh again, replenish the lost weight with methanol, shake thoroughly and filter. Measure accurately 25 ml of the successive filtrate (the remain filtrate for later use), evaporate to dryness, dissolve the residue in methanol, transfer to a 5 ml volumetric flask, dilute with methanol to volume and shake thoroughly, filter, and use the successive filtrate as the test solution.

Procedure Inject accurately 10 μl of each of the reference solution and the test solution into the column, and calculate the content.

It contains not less than 0.53 mg of loganin ($C_{17}H_{26}O_{10}$) per gram of water-honeyed pills, 0.38 mg per gram of small honeyed pills and 3.40 mg per big honeyed pill, referred to Fructus Corni.

Cortex Moutan Carry out the method for high performance liquid chromatography (Appendix Ⅵ D).

Chromatographic system and system suitability Use octadecylsilane bonded silica gel as the stationary phase and a mixture of methanol and water (70 : 30) as the mobile phase. As detector a spectrophotometer set at 274 nm. The number of theoretical plates of the column is not less than 3500, calculate with the reference to the peak of paeonol.

Reference solution Dissolve a quantity of paeonol CRS, accurately weighed, in methanol to produce a solution containing 15 μg per ml as the reference solution.

Test solution To the successive filtrate, obtained under the Assay of Fructus Corni, filter and use the successive filtrate as the test solution.

Procedure Inject accurately 10 μl of each of the reference solution and the test solution into the column, and calculate the content.

It contains not less than 0.80 mg of paeonol ($C_9H_{10}O_3$) per gram of water-honeyed pills, 0.60 mg per gram of small honeyed pills and 5.40 mg per big honeyed pill, referred to Cortex Moutan.

Action To warm and replenish *kidney-yang*.

Indications Cold pain in the lower back and knees, edema of limbs, dysuria, or polyuria or dyspnea, and coughing due to retention of phlegm or morbid fluid and diabetes due to insufficiency of *kidney-yang*.

Usage and dosage 6 g of water-honeyed pills, 9 g of small honeyed pills or 1 big honeyed pill; twice a day.

Strength 9 g per big honeyed pill

Storage Preserve in tightly closed containers.

Guifu Lizhong Wan
(桂附理中丸)

Guifu Lizhong Pills

Ingredients Cortex Cinnamomi 30 g; Radix Aconiti Lateralis Praeparata 30 g; Radix Codonopsis 90 g; Rhizoma Atractylodis Macrocephalae (stir-baked) 90 g; Rhizoma Zingiberis Praeparatum 90 g; Radix et Rhizoma Glycyrrhizae Praeparata Cum Melle 90 g.

Procedure Pulverize the above six ingredients to fine powders, sift, and mix well. To each 100 g of the powder add 120-140 g of refined honey to make big honeyed pills.

Description Brown big honeyed pills; odour, slight; taste, sweet and pungent.

Identification (1) Microscopical: Fibres usually singly scattered, long fusiform, 24-50 μm in diameter, with thickened and lignified walls. Anastomosing laticiferous tubes 12-15 μm in diameter, containing fine granules. Needle crystals of calcium oxalate fine, 10-32 μm long, irregularly filling in parenchymatous cells. Starch granules long ovoid, broad ovoid, or irregular, 25-32 μm in diameter, hilum pointed at the small end, striations distinct. Fibre bundles surrounded by cells containing prisms of calcium oxalate, forming crystal fibres.

(2) Cut 9 g of the pills into pieces, add 4.5 g of kieselguhr and 50 ml of water, triturate well. Add another 50 ml of water, stir for 20 minutes, filter under reduced pressure. Wash the residue with 50 ml of water, dry at 60℃ for 2 hours. Heat under reflux in a Soxhlet's extractor with 70 ml of ethanol on a water bath until the extract becomes colourless. Cool, filter, concentrate the filtrate to almost dryness, dissolve in 4 ml of ethanol, and use the solution as the test solution. Heat under reflux 0.5 g of Radix et Rhizoma Glycyrrhizae reference drug with 30 ml of ethanol on a water bath for 1 hour, filter, concentrate the filtrate to 1 ml, and use it as the reference drug solution. Dissolve a quantity of ammonium glycyrrhizinate CRS in ethanol to produce a solution containing 1 mg per ml as the reference solution. Carry out the method for thin layer chromatography (Appendix Ⅵ B), using silica gel G mixed with 0.8% solution of sodium hydroxide as the coating substance and a mixture of ethyl acetate, formic acid, glacial acetic acid and water (15 : 1 : 1 : 2) as the mobile phase. Apply separately 1 μl of each of the three solutions to the plate. After developing and removal of the plate, dry in air, spray with a solution of sulfuric acid in ethanol (1→10). Heat at 105 ℃ for 5-10 minutes, and examine under ultraviolet light at 365 nm. The fluorescent spots in the chromatogram obtained with the test solution correspond in position and colour to the spots in the chromatogram obtained with the reference drug solution and the reference solution.

(3) Heat under reflux 9 g of the pills, in pieces, with 20 ml of ethyl acetate on a water bath for 30 minutes, cool, and filter. Concentrate the filtrate at a low temperature to 5 ml as the test solution. Dissolve a quantity of cinnamaldehyde CRS in ethanol to produce a solution containing 2 μg per ml as the reference solution. Carry out the method for thin layer chromatography (Appendix Ⅵ B), using silica gel G mixed with sodium carboxymethyl cellulose as the coating substance and a mixture of petroleum ether (60-90 ℃) and ethyl acetate (17 : 3) as the mobile phase. Apply separately 10 μl of the test solution and 2 μl of the reference solution to the plate. After developing and removal of the plate, dry in air, and spray with a solution of dinitrophenylhydrazine in ethanol. The orange-red spot in the chromatogram obtained with the test solution corresponds in position and colour to the spot in the chromatogram obtained with the reference solution.

Other requirements Comply with the general requirements for pills (Appendix Ⅰ A).

Limit test of aconitine Cut 42 g of the pills into pieces, weighed accurately, and grind well with an appropriate quantity of kieselguhr. Add 10 ml of ammonia TS, stir well, allow to stand for 2 hours, and add 100 ml of ether, shake for 1 hour, stand for 48 hours, filter, evaporate the

filtrate to dryness. Disslove the residue in 1 ml of dehydrated ethanol as the test solution. Dissolve aconitine CRS in dehydrated ethanol to produce a solution containing 1 mg per ml as the reference solution. Carry out the method for thin layer chromatography (Appendix Ⅵ B), using silica gel G as the coating substance and a mixture of chloroform, acetone and methanol (6 : 1 : 1) as the mobile phase. Apply in strips separately 24 μl of the test solution and 5 μl of the reference solution to the plate. After developing to 13 cm and removal of the plate, dry in air and spray with dilute potassium iodobismuthate TS. The size of the strip in the chromatogram obtained with the test solution is less than the corresponding strip in the chromatogram obtained with the reference solution or no strip reveals in the chromatogram obtained with the test solution.

Action To reinforce the kidney and support *yang*, and warm the *middle-energizer* to invigorate the spleen.

Indications Cold pain in the stomach and abdomen, vomiting and diarrhea and cold limbs due to decline of *kidney-yang*, and cold and deficiency in the spleen and stomach.

Usage and dosage 1 pill, twice a day, taken with ginger decoction or warm boiled water.

Precaution Be cautious about pregnant women.

Strength 9 g per pill

Storage Preserve in tightly closed containers.

Guilingji
(龟龄集)

Guilingji Capsules

Guilingji Capsules are prepared from Radix et Rhizoma Ginseng, Cornu Cervi Pantotrichum, Hippocampus, Fructus Lycii, Flos Caryophylli, Squama Manis, Encephalon Passeris, Radix Achyranthis Bidentatae, Herba Cynomorii, Radix Rehmanniae Praeparata, Fructus Psoraleae, Semen Cuscutae, Cortex Eucommiae, Fossilia Spiriferis, Herba Cistanches, Radix et Rhizoma Glycyrrhizae, Radix Asparagi, Herba Epimedii, Halitum, Fructus Amomi and others by processing, pulverizing, mixing and packing into capsules.

Description Aard capsules containing brown contents; odour, characteristic; taste, salty.

Identification (1) Microscopical: Sclerenchymatous cells of tegmen brownish-yellow or brownish-red, subpolygonal in surface view, walls thickened, lumen containing silica bodies. Unossified bone tissue plae grey or nearly colourless, border and surface uneven, with irregularly convex masses, linear striations visible indistinctly. Pieces of scale colourless, with rounded pits in variable size. Striated muscle nearly colourless or pale yellow, transverse striations thin and dense, arranged in light and dark alternately, straight or slightly sinuous.

(2) To 0.2 g of the content add 5 ml of water, heat on a water bath for 15 minutes, cool and filter. To the filtrate add 0.2 g of active charcoal, heat again on a water bath for 5 minutes, cool and filter. To the filtrate add several drops of ninhydrin TS, mix well and heat on a water bath for about 10 minutes, a bluish-violet colour is produced.

(3) Extract 1 g of the content with two 10-ml quantities of petroleum ether (60-90 ℃), discard the petroleum ether, and evaporate the drug residue to dryness. Macerate the residue in 20 ml of dehydrated ethanol for 1 hour, filter and evaporate the filtrate to dryness. Dissolve the residue in 0.5 ml of chloroform as the test solution. Dissolve a quantity of psoralen CRS in chloroform to produce a solution containing 0.1 mg per ml as the reference solution. Carry out the method for thin layer chromatography (Appendix Ⅵ B), using silica gel G mixed with sodium carboxymethyl cellulose as the coating substance and a mixture of petroleum ether (60-90℃), ether and chloroform (5 : 1 : 5) as the mobile phase. Apply separately 20 μl of the test solution and 10 μl of the reference solution to the plate. After developing and removal of the plate, dry in air, and examine under ultraviolet light at 365 nm. The fluorescent spot in the chromatogram obtained with the test solution corresponds in position and colour to the spot in the chromatogram obtained with the reference solution.

(4) Dissolve separately a quantity of ginsenoside Rg_1 CRS, ginsenoside Re CRS, ginsenoside Rb_1 CRS in methanol to produce three kinds of solutions each containing 1 mg per ml as the reference solutions. Use the test solution prepared in Assay as the test solution. Carry out the method for thin layer chromatography (Appendix Ⅵ B), using silica gel G mixed with sodium carboxymethyl cellulose as the coating substance, and the lower layer of a mixture of chloroform, methanol and water (13 : 7 : 2), kept at 10℃ or below, as the mobile phase. Apply separately 10 μl of the test solution and 2 μl each of the reference solutions to the plate. After developing and removal of the plate, dry in air. Spray with 10% sulfuric acid in ethanol, heat at 100℃ to the spots distinct. Examine in daylight. The spots in the chromatogram obtained with the test solution correspond in position and colour to the spots in the chromatogram obtained with the reference solutions. Examine under ultraviolet light at 365 nm. The fluorescent spots in the chromatogram obtained with the test solution correspond in position and colour to the spots in the chromatogram obtained with the reference solutions.

Other requirements Comply with the general requirements for capsules (Appendix Ⅰ L).

Volatile ether-soluble extractives To 2 g of the content, carry out the method for determination of volatile ether-soluble extractives (Appendix Ⅹ A), it contains not less than 0.25 per cent of volatile ether-soluble extractives.

Assay Weigh accurately the content of 20 capsules, triturated to fine powder, and mix well. Place 2.5 g, weighed accurately, into a Soxhelt's extractor, add 60 ml of ether, heat under reflux to the extract nearly colourless and discard the ether extract. To the residue, discard ether, add 70 ml of methanol, heat under reflux to the extract colourless. Concentrate the methanol extract to dryness, dissolve the residue in 15 ml of *n*-butanol saturated with water, and transfer to a separating funnel and extract with three 15-ml quantities of water saturated with *n*-butanol. Combine the extracts, wash with successive quantities of 15 ml, 15 ml, 10 ml 1% solution of sodium hydroxide, then wash to neutrality with *n*-butanol saturated with water. Concentrate the butanol extract to dryness, dissolve the residue in a quantity of 70% ethanol and apply to a column (1 cm in inner diameter) packed with D101 macroporous resin at the lower part (7 cm long) and neutral aluminum oxide (100-120 meshes) at the upper part (3 cm long) of the column. Elute the column with 80 ml of 70% ethanol, evaporate the eluate to dryness. Dissolve the residue in methanol, transfer to a 2 ml volumetric flask, add methanol to volume and mix well. Dissolve a quantity of ginsenoside Rg_1 in methanol to produce a solution containing 1 mg per ml as the reference solution. Carry out the method for thin layer chromatography (Appendix Ⅵ B), using silica gel G as the coating substance and the lower layer of a mixture of

chloroform, methanol and water (13 : 7 : 2), kept at 10℃ or below, as the mobile phase. Apply accurately 10 μl of the test solution and 2 μl and 4 μl of the reference solution to the plate. After developing and removal of the plate, dry in air. Spray with 10% sulfuric acid in ethanol, heat at 100℃ to the spots clear, cool. Cover the plate with a piece of glass of the same size, and fix with tape. Carry out the method for thin layer chromatography (Appendix Ⅵ B thin layer chromatographic scanning method) scan at the wavelength of $\lambda_S = 541$ nm, $\lambda_R = 700$ nm. Measure the integral values of the absorbance from the test solution and the reference solution, and calculate the content.
It contains not less than 55 μg of ginsenoside Rg_1 ($C_{42}H_{72}O_{14}$) per capsule, referred to Radix et Rhizoma Ginseng.

Action To strengthen the body and nourish the brain, reinforce the kidney and replenish *qi*, and whet the appetite.

Indications Poor memory, emission, aching and weak lower back and knees, coughing in a deficient condition, daily diarrhea occurring before dawn and loss of appitite due to a deficiency of *kidney-essence* specially *kidney-yang*.

Usage and dosage 0.6 g, 1 time a day, taken with dilute salt water 2 hours before breakfast.

Precaution Avoid raw, cold or irritant foods; it is forbidden to prescribe to pregnant women; cease medication when one contracts common cold.

Strength 0.3 g per capsule

Storage Preserve in tightly closed containers.

Guilin Xiguashuang (桂林西瓜霜)

Guilin Xiguashuang

Ingredients Mirabilitum Praeparatum; Boroborax (calcined); Cortex Phellodendri Chinensis; Rhizoma Coptidis; Radix Sophorae Tonkinensis; Rhizoma Belamcandae; Bulbus Fritillariae Thunbergii; Indigo Naturalis; Borneolum Syntheticum; Fructus Sapindi (charred); Radix et Rhizoma Rhei; Radix Scutellariae; Radix et Rhizoma Glycyrrhizae; Mentholum.

Procedure Pulverize the above fourteen ingredients, except Mirabilitum Praeparatum, Boroborax, Indigo Naturalis, Borneolum Syntheticum and Mentholum, to fine powder. Pulverize separately Mirabilitum Preparatum, Boroborax, Indigo Naturalis, Borneolum Syntheticum, Mentholum, then pulverize with the above fine powder and a quantity of silicon dioxide, stevioside, citric acid and other excipients, sift and mix well.

Description Greyish-green powder; odour, fragrant; taste, salty, sweet, slightly bitter and pungent.

Identification (1) To 0.5 g add 3 ml of water, shake well and filter. Add 1 ml of barium chloride TS to the filtrate, a white precipitate is produced immediately. The precipitate doesn't dissolve in hydrochloric acid.
(2) To 0.5 g add 2 ml of sulfuric acid, mix well, add 8ml of methanol, fire to burn, the flame with green edge is produced.
(3) Sublime a quantity, the sublimate is colourless or white amorphous crystal with aromatic odour. Dissolve the crystals with several drops of ethanol, add 1-2 drops of 1% vanillin in sulfuric acid prepared freshly, a violet to violet-red colour is produced immediately.
(4) Macerate 2 g in 20 ml of ethanol for 1 hour with frequently shaking, filter, and evaporate the filtrate to dryness. Dissolve the residue in 15 ml of water, add 0.5 ml of hydrochloric acid, heat under reflux for 30 minutes, and allow to cool immediately. Extract with ether twice, 10 ml for the first time and 5 ml for the second time, combine the ether extract, and evaporate to dryness. Dissolve the residue in 0.5 ml of chloroform as the test solution. Dissolve a quantity of indirubin CRS in chloroform to produce a solution containing 1 mg per ml as the reference solution, dissolve separately a quantity of emodin CRS, chrysophanol CRS in methanol to produce solutions each containing 1 mg per ml as the reference solutions. Carry out the method for thin layer chromatography (Appendix Ⅵ B), using silica gel G mixed with sodium carboxymethyl cellulose as the coating substance, and the upper layer of a mixture of petroleum ether (30-60℃), ethyl formate and formic acid (15 : 5 : 1) as the mobile phase. Apply separately 3-6 μl of each of the four solutions to the plate. After developing and removal of the plate, dry in air, examine in daylight and ultraviolet light at 365 nm separately. In daylight, one spot in the chromatogram obtained with the test solution corresponds in position and colour to the spot in the chromatogram obtained with the indirubin reference solution. Under ultraviolet light, other two spots correspond respectively in position and colour to the spots in the chromatogram obtained with the emodin and chrysophanol reference solutions. Examine in daylight, the colour of spots becomes red on exposure to ammonia vapour.
(5) To the ethanol extracted residue obtained under Identification (4), add 5 drops of sodium hydroxide TS and 15 ml of chloroform, heat under reflux for 30 minutes. Filter, evaporate the filtrate to dryness. Dissolve the residue in 5 ml of chloroform, filter and concentrate the filtrate to about 0.5 ml as the test solution. Dissolve a quantity of matrine CRS in chloroform to produce a solution containing 1 mg per ml as the reference solution. Carry out the method of thin layer chromatography (Appendix Ⅵ B), using silica gel G mixed with sodium carboxymethyl cellulose as the coating substance, and a mixture of benzene, ethyl acetate, acetone and concentrated ammonia (10 : 20 : 15 : 1) as the mobile phase. Apply separately 4-8 μl of the test solution and 3 μl of the reference solution to the plate. After developing and removal of the plate, dry in air, spray with dilute potassium iodobismuthate TS. The spot in the chromatogram obtained with the test solution corresponds in position and colour to the spot in the chromatogram obtained with the reference solution.
(6) Prepare a solution of 0.05 g of Rhizoma Coptidis reference drug in the same manner as described under the Assay as the reference drug solution. Dissolve a quantity of berberine hydrochloride CRS in methanol to produce a solution containing 0.5mg per ml as the reference solution. Carry out the method for thin layer chromatography (Appendix Ⅵ B), using silica gel G mixed with sodium carboxymethyl cellulose as the coating substance and a mixture of benzene, ethyl acetate, methanol, isopropanol and concentrated ammonia (12 : 6 : 3 : 3 : 1) as the mobile phase. Apply separately 2 μl of each of the test solution obtained under the Assay, the reference drug solution and the reference solution to the plate. After developing in a chamber pre-equilibrated with mobile phase and concentrated ammonia TS for 15 minutes, removal of the plate and dry in air. Examine under ultraviolet light at 365 nm. The fluorescent spots in the chromatogram obtained with the test solution correspond in position and colour to the spots in the chromatogram obtained with the reference drug solution and the reference solution.

Other requirements Comply with the general requirements for powders (Appendix Ⅰ B).

Assay Carry out the method for high performance liquid chromatography (Appendix Ⅵ D).

Chromatographic system and system suitability Use

octadecylsilane bonded silica gel as the stationary phase and a mixture of acetonitrile and 0.05 mol/L sodium dihydrogen phosphate (adjust the pH value to 3 with phosphoric acid) (30 : 70) as the mobile phase. As detector a spectrophotometer set at 350 nm. The number of theoretical plates of the column is not less than 5000, calculated with the reference to the peak of berberine hydrochloride.

Reference solution Dissolve a quantity of berberine hydrochloride CRS, accurately weighed, in a mixture of hydrochloric acid-methanol (1 : 100) to produce a solution containing 40 μg per ml as the reference solution.

Test solution Weigh accurately 0.5 g of the powder, to a stopper conical flask, accurately add 50 ml of a mixture of hydrochloric acid-methanol (1 : 100), tightly stopper and weigh. Ultrasonicate (power, 250 W; frequency, 33 kHz) for 40 minutes, allow to stand to room temperature, weigh again, replenish the lost weight with the above mixture, shake thoroughly and filter, use the successive filtrate as the test solution.

Procedure Inject accurately 5 μl of each of the reference solution and the test solution into the column, and calculate the content.

It contains not less than 2.5 mg of berberine hydrochloride ($C_{20}H_{18}ClNO_4$) per gram, referred to Cortex Phellodendri Chinensis and Rhizoma Coptidis.

Action To clear *heat* and *toxicity*, and reduce swelling pain.

Indications Tonsillitis, inflammation of the throat, aphthous stomatitis due to attack of the upper part of the body by *wind-heat* and extremely abundant *heat* in the lung and stomach, with manifestations of swollen painful throat, swollen tonsil, or sores on the mouth and tongue, or swollen painful gums or gingival bleeding; acute and chronic pharyngitis, tonsillitis, stomatitis, stomatocace, gingivitis with above symptoms, and mild scald (without rupture of the skin).

Usage and dosage For external use, spray or spread some on the lesion, several times a day; some for severe conditions, 1-2 g, 3 times a day.

Strength (1) 1 g (2) 2 g (3) 2.5 g (4) 3 g per bottle

Storage Preserve in tightly closed containers.

Guilong Kechuanning Jiaonang (桂龙咳喘宁胶囊)

Guilong Kechuanning Capsules

Ingredients Ramulus Cinnamomi; Os Draconis; Radix Paeoniae Alba; Rhizoma zingiberis Recens; Fructus Jujubae; Radix et Rhizoma Glycyrrhizae Praeparata Cum Melle; Concha Ostreae, Rhizoma Coptidis; Rhizoma Pinelliae Praeparatum, Pericarpium Trichosanthis; Semen Armeniacae Amarum (stir-baked).

Procedure Pulverize Ramulus Cinnamomi and a part of Radix Paeoniae Alba to fine powder, sift and mix well. Decoct the remains of Radix Paeoniae Alba and the other nine ingredients with water 3 times, 2 hours for the first time, 1 hour for the second time and 0.5 hour for the third time. Combine the decoctions, filter, concentrate the filtrate in vacuum until its relative density is 1.25-1.30 (60℃), mix with the above fine powder, dry at a low temperature and pulverize to fine powder, sift, mix well, pack into capsules.

Description Hard capsules containing pale-brown powder; odour, fragrant; taste, slightly bitter and sweet.

Identification (1) Microscopical: stone cells scattered or grouped, colourless to brown, subsquare or rectangular, 30-64 μm in diameter, walls thinner on one side. Clusters of calcium oxalate 18-32 μm in diameter, scattered in parenchymatous cells, often in rows, or several crystals in a cell.

(2) Add 10 ml of ethanol to 1.5 g of the contents, tightly stopper, macerate for 30 minutes with frequently shaking, and filter, using the filtrate as the test solution. Dissolve a quantity of cinnamaldehyde CRS in ethanol to produce a solution containing 1 mg per ml as the reference solution. Carry out the method for thin layer chromatography (Appendix Ⅵ B), using silica gel G as the coating substance and a mixture of petroleum ether (60-90℃) and ethyl acetate (17 : 3) as the mobile phase. Apply separately 15 μl of the test solution and 2 μl of the reference solution to the plate. After developing and removal of the plate, dry in air. Spray with dinitrophenylhydrazine TS. The spot in the chromatogram obtained with the test solution corresponds in position and colour to the spot in the chromatogram obtained with the reference solution.

(3) Add 10 ml of ethanol to 1.5 g of the contents, tightly stopper, shake for 10 minutes, filter, evaporate the filtrate to dryness, and dissolve the residue in 1 ml of ethanol as the test solution. Dissolve a quantity of paeoniflorin CRS in ethanol to produce a solution containing 1 mg per ml as the reference solution. Carry out the method for thin layer chromatography (Appendix Ⅵ B), using silica gel G as the coating substance and a mixture of chloroform, methanol and ethyl acetate (8 : 4 : 1) as the mobile phase. Apply separately 10 μl of each of the two solutions to the plate. After developing in a chamber pre-equilibrated with ammonia vapour, removal of the plate, dry in air, spray with a solution of sulfuric acid and ethanol (1→10), heat at 100℃ to the spots clear. The spot in the chromatogram obtained with the test solution corresponds in position and colour to the spot in the chromatogram obtained with the reference solution.

(4) Dissolve a quantity of berberine hydrochloride CRS in methanol to produce a solution containing 0.5 mg per ml as the reference solution. Carry out the method for thin layer chromatography (Appendix Ⅵ B), using silica gel G as the coating substance and a mixture of butanol, glacial acetic acid and water (7 : 1 : 2) as the mobile phase. Apply separately 5 μl of the reference solution and 10 μl of the test solution obtained under Identification (2) to the plate. After developing and removal of the plate, and dry in air. Examine under ultraviolet light at 365 nm. The fluorescent spot in the chromatogram obtained with the test solution corresponds in position and colour to the spot in the chromatogram obtained with the reference solution.

Other requirements Comply with the general requirements for capsules (Appendix Ⅰ L).

Assay Carry out the method for high performance liquid chromatography (Appendix Ⅵ D).

Chromatographic system and system suitability Use octadecylsilane binding silica gel as the stationary phase and a mixture of acetonitrile and 0.1% phosphoric acid solution (30 : 70) as the mobile phase. As detector a spectrophotometer set at 285 nm. The number of theoretical plates of the column is not less than 2000, calculated with reference to the peak of cinnamic acid.

Reference solution Dissolve a quantity of cinnamic acid CRS in an amber volumetric flask in 50% methanol to produce a solution containing 7 μg per ml as the reference solution.

Test solution Weigh accurately about 1 g of the mixed contents, obtained under the test of weight variation, to a stopper conical flask, add 50 ml of 50% methanol, stopper tightly. Weigh and ultrasonicate (power, 250 W;

frequency, 33 kHz) for 30 minutes. Cool and weigh again, replenish the lost weight with 50% methanol, and mix well. Filter, use the successive filtrate as the test solution.

Procedure Inject accurately 10 μl of each of the reference solution and the test solution into the column, and calculate the content.
It contains not less than 70 μg of cinnamic acid ($C_9H_8O_2$) per capsule, referred to Ramulus Cinnamomi.

Action To release the exterior to disperse *cold*, relieve coughing and resolve *phlegm*, and send *qi* down to alleviate asthma.

Indications Coughing and asthma due to affliction from external *wind-cold* and *phlegm-dampness* retained in the *lung*, or abundance of *phlegm*; acute and chronic bronchitis with above symptoms.

Usage and dosage 5 capsules, 3 times daily.

Precaution Avoid smoking, wine, pork, raw and cold foods.

Strength 0.3 g per capsule (equivelent to 1 g of crude drug)

Storage Preserve in tightly closed containers.

Guilu Bushen Wan
(龟鹿补肾丸)

Guilu Bushen Pills

Ingredients Semen Cuscutae (stir-baked) 51 g; Herba Epimedii (steamed) 43 g; Radix Dipsaci (steamed) 43 g; Herba Cynomorii (steamed) 51 g; Rhizoma Cibotii (steamed) 64 g; Semen Ziziphi Spinosae (stir-baked) 43 g; Radix Polygoni Multiflori Praeparata Cum Succo Glycines Sotae 64 g; Radix et Rhizoma Glycyrrhizae Praeparata Cum Melle 21 g; Pericarpium Citri Reticulatae (steamed) 21 g; Colla Cornus Cervi (stir-baked) 9 g; Radix Rehmanniae Praeparata 64 g; Colla Carapacis et Plastri Testudinis (stir-baked) 13 g; Fructus Rosae Laevigatae (steamed) 51 g; Radix Astragali Praeparata Cum Melle 43 g; Rhizoma Dioscoreae (stir-baked) 43 g; Fructus Rubi (steamed) 85 g.

Procedure Pulverize the above sixteen ingredients to fine powder, sift, mix well. To each 100 g of the powder add 40 g of refined honey and a quantity of water, make to water-honeyed pills and dry; alternatively, add 100-110 g of refined honey, make to big honeyed pills.

Description Brownish-black to black water-honeyed pills or big honeyed pills; taste, slightly sweet.

Identification (1) Microscopical: Starch granules triangular-ovoid or rectangular-rounded, 24-40 μm in diameter, hilum shortly cleft or V-shaped. Palisade cells of testa 2 rows, the inner row relatively long, with brilliant line. Clusters of calcium oxalate up to about 45 μm in diameter, occurring in pale brownish-yellow and shrunken parenchymatous cells, often several arranged in one row. Scalariform tracheid pale yellow to golden yellow, pits arranged regularly. Parenchyma greyish-brown to blackish-brown, cells mostly shrunken, containing brown nucleus-like masses. Non-glandular hairs mostly broken, 16-31 μm in diameter, walls thick, lumen containing yellowish-brown masses. Cells of tegmen brownish-yellow, rectangular or subsquare in surface view, anticlinal walls beaded. Fibre bundles surrounded by parenchymatous cells containing prisms of calcium oxalate, forming crystal fibres. Fibres in bundle or scattered, walls thick, with longitudinal fissures in surface, two ends broken to broom-like or relatively even. Non glandular hairs 1-celled, walls thickened and lignified, remaining a scar like stone cell after falling. Epidermal cells of leaves with deeply sinuous walls.
(2) Triturate well 12 g of big honeyed pills or 9 g of water-honeyed pills with 4 g of kieselguhr to powder, and add 30 ml of methanol, stand for 1 hour, shake thoroughly, filter and evaporate the filtrate to dryness. Dissolve the residue in 10 ml of water, and add 2 ml of hydrochloric acid, heat on a water bath for 10 minutes, cool and extract with 20 ml of ethyl acetate, separate the ethyl acetate extracts, evaporate to dryness on a water bath. Dissolve the residue in 1 ml of ethyl acetate as the test solution. Prepare a solution of 0.5 g of Radix Polygoni Multiflori reference drug in the same manner as the reference drug solution. Carry out the method for thin layer chromatography (Appendix Ⅵ B), using silica gel G mixed with 0.5% solution of sodium hydroxide as the coating substance and a mixture of toluene, ethyl acetate and formic acid (15 : 2 : 1) as the mobile phase. Apply separately 5 μl of the test solution and 1-2 μl of the reference drug solution to the plate. After developing and removal of the plate, dry in air, and examine under ultraviolet light at 365 nm. The fluorescent spots in the chromatogram obtained with the test solution correspond in position and colour to the spots in the chromatogram obtained with the reference drug solution.

Other requirements Comply with the general requirements for pills (Appendix Ⅰ A).

Action To reinforce *kidney-yang*, replenish *qi* and blood and tone up the tendons and bones.

Indications Decline in health, lassitude, aching and weakness in the lower back and knees, dizziness, blurred vision, cold and thin sperm, hyposexuality, night polyuria, amnesia and insomnia due to a deficiency of *kidney-yang*.

Usage and dosage 4.5-9 g of water-honeyed pills, 6-12 g of big honeyed pills, twice a day.

Strength 6 g or 12 g per big honeyed pill

Storage Preserve in tightly closed containers.

Guipi Wan
(归脾丸)

Guipi Pills

Ingredients Radix Codonopsis 80 g; Rhizoma Atractylodis Macrocephalae (stir-baked) 160 g; Radix Astragali Praeparata Cum Melle 80 g; Radix et Rhizoma Glycyrrhizae Praeparata Cum Melle 40 g; Poria 160 g; Radix Polygalae (processed) 160 g; Semen Ziziphi Spinosae (stir-baked) 80 g; Arillus Longan 160 g; Radix Angelicae Sinensis 160 g; Radix Aucklandiae 40 g; Fructus Jujubae (cored) 40 g.

Procedure Pulverize the above eleven ingredients to fine powder, sift and mix well. To each 100 g of powder add 25-40 g of refined honey and a quantity of water to make to pills and dry; alternatively, add 80-90 g of refined honey to make to small honeyed pills or big honeyed pills.

Description Brown water-honeyed pills, small honeyed pills or big honeyed pills; odour, slight; taste, sweet, and then slightly bitter and pungent.

Identification (1) Microscopical: Irregular branched masses colourless, dissolved in chloral hydrate TS; hyphae colourless or pale brown, 4-6 μm in diameter. Anastomosing laticiferous tubes 12-15 μm in diameter, containing minute granular substances. Cells of endotesta brownish-yellow, polygonal or subsquare in surface view, with beaded anticlinal walls. Fibres in bundles or scattered, mostly broken, with thickened walls and longitudinal fissures on surface, both

ends broken to broom-like, or truncate. Fibre bundles surrounded by parenchymatous cells containing prisms of calcium oxalate, forming crystal fibres. Reticulate vessels up to 90 μm in diameter. Needles of calcium oxalate fine, irregularly filling in parenchymatous cells. Parenchymatous cells fusiform, with slightly thickened walls and fine oblique crisscross striations.

(2) To 9 g of small or big honeyed pills, in pieces, add 5-8 g of kieselguhr, triturate well and heat to dry. Add 20 ml of hexane, ultrasonicate for 15 minutes and filter. Evaporate the filtrate to about 1 ml as the test solution. Prepare a solution of 1 g Radix Angelicae Sinensis reference drug in the same manner as the reference drug solution. Carry out the method for thin layer chromatography (Appendix Ⅵ B), using silica gel G as the coating substance and a mixture of hexane and ethyl acetate (9 : 1) as the mobile phase. Apply separately 2 μl of each of the two solutions to the plate. After developing and removal of the plate, dry in air, and examine under ultraviolet light at 365 nm. The fluorescent spots in the chromatogram obtained with the test solution correspond in position and colour to the spots in the chromatogram obtained with the reference drug solution.

(3) Grind 9 g of water-honeyed pills; or cut 12 g of small honeyed pills or big honeyed pills into pieces, add an appropriate quantity of kieselguhr, mix well. To the powder add 50 ml of ether, ultrasonicate for 20 minutes, filter, evaporate the filtrate to dryness. Dissolve the residue in 1 ml of methanol as the test solution. Prepare a solution of 1 g of Radix Aucklandiae reference drug in the same manner as the reference drug solution. Carry out the method for thin layer chromatography (Appendix Ⅵ B), using silica gel G as the coating substance and a mixture of cyclohexane and acetone (10 : 3) as the mobile phase. Apply separately 10 μl of the test solution and 4 μl of the reference drug solution to the plate. After developing and removal of the plate, dry in air. Spray with 10% vanillin in sulfuric acid, heat to the spots clear. The spots in the chromatogram obtained with test solution correspond in position and colour to the spots in the chromatogram obtained with the reference drug solution.

Other requirements Comply with the general requirements for pills (Appendix Ⅰ A).

Action To reinforce *qi* and invigorate the spleen, nourish blood to anchor the mind.

Indications Shortness of breath, palpitation, insomnia, dreamfulness, dizziness, lassitude, poor appetite, metrorrhagia or metrostaxis, and hemafecia due to deficiency in the heart and spleen.

Usage and dosage 6 g of water-honeyed pills, 9 g of small honeyed pills or 1 big honeyed pill, 3 times a day, taken with warm boiled water or fresh ginger soup.

Strength 9 g per big honeyed pill

Storage Preserve in tightly closed containers.

Guishao Dihuang Wan (归芍地黄丸)

Guishao Dihuang Pills

Ingredients Radix Angelicae Sinensis 40 g; Radix Paeoniae Alba (stir-baked with wine) 40 g; Radix Rehmanniae Praeparata 160 g; Fructus Corni (processed) 80 g; Cortex Moutan 60 g; Rhizoma Dioscoreae 80 g; Poria 60 g; Rhizoma Alismatis 60 g.

Procedure Pulverize the above eight ingredients to fine powder, sift and mix well. To each 100 g of powder add 35-50 g of refined honey and a quantity of water to make to pills and dry. Alternatively, add 80-110 g of refined honey to make to small honeyed pills or big honeyed pills.

Description Brownish-black water-honeyed pills, blackish-brown small honeyed pills or big honeyed pills; taste, sweet and slightly sour.

Identification (1) Microscopical: Gelatinized starch masses whitish. Irregular branched masses colourless, dissolved in chloral hydrate TS; hyphae colourless or pale brown, 4-6 μm in diameter. Parenchymatous cells fusiform, with slightly thickened walls and very fine oblique crisscross striations; Parenchyma greyish-brown to blackish-brown, cells mostly shrunken, and each containing a brown nucleus-like mass. Epidermal cells of pericarp orange-yellow, subpolygonal in surface view, with slightly beaded anticlinal walls. Raphides of calcium oxalate 80-240 μm long, occurring in mucilage cells, needles 2-8 μm in diameter. Cork cells rectangular, slightly thick-walled, pale red to purplish, with slightly thickened walls. Parenchymatous cells subrounded, with elliptical pits, gathered into pit groups. Anticlinal walls of endodermis cells sinuous, somewhat relatively thick, lignified, with sparse and minute pit-canals.

(2) Grind well 9 g of the small or big honeyed pills, cut into pieces, with 3 g of kieselguhr, or pulverize 6 g of water-honeyed pills, add 40 ml of ether, heat under reflux at a lower temperature for 1 hour, and filter. Evaporate the filtrate to dryness, dissolve the residue in 1 ml of ether as the test solution. Prepare a solution of 1 g of Radix Angelicae Sinensis reference drug and 15 ml of ether in the same manner as the reference drug solution. Carry out the method for thin layer chromatography (Appendix Ⅵ B), using silica gel G as the coating substance and a mixture of *n*-hexane and ethyl acetate (9 : 1) as the mobile phase. Apply separately 5 μl of each of the two solutions to the plate. After developing and removal of the plate, dry in air. Examine under the ultraviolet light at 365 nm. The fluorescent spots in the chromatogram obtained with the test solution correspond in position and colour to the spots in the chromatogram obtained with the reference drug solution.

(3) Grind well 9 g of the small or big honeyed pills, cut into pieces, with 4 g of kieselguhr, or pulverize 6 g of water-honeyed pills. Add 50 ml of ethanol, ultrasonicate for 10 minutes, filter, evaporate the filtrate to dryness. Dissolve the residue in 20 ml of water, extract with three 20-ml quantities of *n*-butanol saturated with water by shaking. Combine the *n*-butanol extracts, evaporate to dryness, dissolve the residue in 1 ml of ethanol as the test solution. Dissolve a quantity of paeoniflorin CRS in ethanol to produce a solution containing 1 mg per ml as the reference solution. Carry out the method for thin layer chromatography (Appendix Ⅵ B), using silica gel G as the coating substance and a mixture of chloroform, ethyl acetate, methanol, and formic acid (40 : 5 : 10 : 0.2) as the mobile phase. Apply separately 5 μl of each of the test solution and the reference solution to the plate. After developing and removal of the plate, dry in air, spray with 5% vanillin in sulfuric acid, heat at 105℃ to the spots clear. The spot in the chromatogram obtained with the test solution corresponds in position and colour to the spot in chromatogram obtained with the reference solution.

(4) Dissolve a quantity of paeonol CRS in acetone to produce a solution containing 1 mg per ml as the reference solution. Carry out the method for thin layer chromatography (Appendix Ⅵ B), using silica gel G as the coating substance and a mixture of cyclohexane and ethyl acetate (3 : 1) as the mobile phase. Apply separately 10 μl of each of the test solution, obtained under Identification (2), and the reference solution to the plate in strip. After developing and removal of the plate, dry in air, spray with 5% ferric

chloride in ethanol acidified with hydrochloric acid, heat to the band clear. The strip in the chromatogram obtained with the test solution corresponds in position and colour to the strip in chromatogram obtained with the reference solution.

Other requirements Comply with the general requirements for pills (Appendix Ⅰ A).

Assay ***Cortex Moutan*** Carry out the method for high performance liquid chromatography (Appendix Ⅵ D).

Chromatographic system and system suitability Use octadecylsilane bonded silica gel as the stationary phase and a mixture of methanol and water (70 : 30) as the mobile phase. As detector a spectrophotometer set at 274 nm. The number of theoretical plates of the column is not less than 3500, calculated with the reference to the peak of paeonol.

Reference solution Dissolve a quantity of paeonol CRS, accurately weighed, in methanol to produce a solution containing 15 μg per ml as the reference solution.

Test solution Weigh accurately 0.4 g of water-honeyed pills or 0.5 g of small honeyed pills, cut into piece; or weigh accurately 0.5 g of big honeyed pills, obtained under the test of weight variation, cut into pieces, to a stopper conical flask, add accurately 50 ml of 70% methanol, tightly stopper and weigh. Ultrasonicate (power, 250 W; frequency, 33 kHz) for 45 minutes, shake strongly, allow to stand to room temperature and weigh again, replenish the lost weight with 70% methanol, shake thoroughly and filter, use the successive filtrate as the test solution.

Procedure Inject accurately 10 μl of the reference solution and 20 μl of the test solution into the column, and calculate the content.

It contains not less than 0.80 mg of paeonol ($C_9H_{10}O_3$) per gram of water-honeyed pills, 0.60 mg per gram of small honeyed pills and 5.4 mg per big honeyed pill, referred to Cortex Montan.

Radix Paeoniae Alba and Cortex Moutan Carry out the method for high performance liquid chromatography (Appendix Ⅵ D).

Chromatographic system and system suitability Use octadecylsilane bonded silica gel as the stationary phase and a mixture of acetonitrile and 0.1% phosphoric acid solution (14 : 86) as the mobile phase. As detector a spectrophotometer set at 230 nm. The number of theoretical plates of the column is not less than 4500, calculated with the reference to the peak of paeoniflorin.

Reference solution Dissolve a quantity of paeoniflorin CRS, accurately weighed, in methanol to produce a solution containing 50 μg per ml as the reference solution.

Test solution Measure accurately 25 ml of the test solution, obtained under the Assay of Cortex Moutan, evaporate to dryness. Dissolve the residue in 25 ml of water by gently heating, allow to stand to room temperature, extract with three 25-ml quantities of *n*-butanol saturated with water. Combine the *n*-butanol extracts, recover the solvent to dryness, dissolve the residue in an appropriate quantity of methanol, transfer to a 5 ml volumetric flask, dilute with methanol to volume and shake thoroughly as the test solution.

Procedure Inject accurately 10 μl of each of the reference solution and the test solution into the column, and calculate the content.

It contains not less than 0.70 mg of paeoniflorin ($C_{23}H_{28}O_{11}$) per gram of water-honeyed pills, 0.50 mg per gram of small honeyed pills and 4.5 mg per big honeyed pill, referred to Radix Paeoniae Alba and Cortex Moutan.

Action To nourish the liver and kidney, replenish *yin* and blood and clear heat in a deficiency syndrome.

Indications Dizziness, blurred vision, tinnitus, dry throat, afternoon fever, aching and weakness in the lower back and knees, and pain in the heels due to deficiency in the liver and kidney.

Usage and dosage 6 g of water-honeyed pills, 9 g of small honeyed pills or 1 big honeyed pill, 2-3 times a day.

Strength 9 g per big honeyed pill

Storage Preserve in tightly closed containers.

Guizhi Fuling Jiaonang (桂枝茯苓胶囊)

Guizhi Fuling Capsules

Ingredients Ramulus Cinnamoni 240 g; Poria 240 g; Cortex Moutan 240 g; Semen Persicae 240 g; Radix Paeoniae Alba 240 g.

Procedure Pulverize 192 g of Poria to fine powder. Distill Cortex Moutan with water steam; collect the distillation and separate volatile ingredients for later use. Extract the residue of Cortex Moutan after distillation, the remained portion of Poria, Ramulus Cinnamoni, Radix Paeoniae Alba and Semen Persicae with 90% ethanol twice, combine the extracts, recover ethanol, and concentrate in vacuum to a quantity. Decoct the residue with water twice, filter, combine the filtrates and concentrate in vacuum to a quantity. Mix with the fine powder of Poria, dry, pulverize, add a quantity of dextrin, make granules, dry, add the volatile ingredients of Cortex Moutan, mix well, and make to 1000 capsules.

Description Hard capsules with brownish-yellow to brown granular and powdered content; odour, slightly aromatic; taste, slightly bitter.

Identification (1) Microscopical: Irregular branched masses colourless, dissolved in chloral hydrate TS, hyphae colourless or pale brown, 4-6 μm in diameter.

(2) Place 2 g of the content, in a Soxhlet's extractor, add a quantity of ether, heat under reflux for 2 hours, allow to cool, filter, and evaporate the filtrate to dryness. Dissolve the residue in 1 ml of methanol as the test solution. Prepare a solution of 1 g of Cortex Moutan reference drug in the same manner as the reference drug solution. Carry out the method for thin layer chromatography (Appendix Ⅵ B), using silica gel G mixed with sodium carboxymethyl cellulose as the coating substance and a mixture of toluene, chloroform, ethyl formate and formic acid (5 : 6 : 6 : 3) as the mobile phase. Apply separately 5 μl of the two solutions to the plate. After developing and removal of the plate, dry in air, spray with 5% ferric chloride in ethanol (acidified with hydrochloric acid), heat at 105℃ to the spots clear. The spots in the chromatogram obtained with the test solution correspond in position and colour to the spots in the chromatogram obtained with the reference drug solution.

(3) Place 2 g of the content, in a Soxhlet's extractor, add a quantity of methanol, heat under reflux for 2 hours, allow to cool, filter, concentrate the filtrate to 2 ml, and use it as the test solution. Prepare a solution of 1 g of Radix Paeoniae Alba reference drug in the same manner as the reference drug solution. Carry out the method for thin layer chromatography (Appendix Ⅵ B), using silica gel GF_{254} mixed with sodium carboxymethyl cellulose as the coating substance and the lower layer of a mixture of chloroform, methanol and water (26 : 14 : 5) as the mobile phase. Apply separately 5 μl of the two solutions to the plate. After developing and removal of the plate, dry in air, spray with

anisaldehyde TS, heat at 105℃ to the spots clear. The spots in the chromatogram obtained with the test solution correspond in position and colour to the spots in the chromatogram obtained with the reference drug solution.
(4)Dissolve a quantity of cinnamaldehyde CRS in chloroform to produce a solution containing 5 μg per ml as the reference solution. Carry out the method for gas chromatography (Appendix Ⅵ E), using a 1.6 meters long column packed with 5% SE-30 as the sfationary phase; maintain the column temperature at 130℃. Inject a quantity each of the reference solution and the test solution obtained under Assay, into the column. The retention time of the peaks obtained with the test solution and the reference solution is correspond with each other.

Other requirements Comply with the general requirements for capsules (Appendix Ⅰ L).

Assay Carry out the method for gas chromatography (Appendix Ⅵ E).

Chromatographic system and system suitability Use a column packed with 5% SE-30 as the stationary phase, 1.6 m in long; and maintain the column temperature at 130℃. The number of the theoretical plates of the column is not less than 600, calculated with the reference to the peak of paeonol, and the resolution between the peak of paeonol and internal standard substance is not less than 2.

Correction factor Dissolve a quantity of *n*-pentadecane, accurately weighed, in chloroform to produce a solution containing 0.3 mg per ml as the internal standard solution. Dissolve a quantity of paeonol CRS, accurately weighed, in chloroform to produce a solution containing 0.4 mg per ml as the reference solution. Measure accurately 2 ml each of the reference solution and the internal standard solution into a 25 ml volumetric flask, dilute with chloroform to volume and shake well, inject 1 μl into the column, and calculated the correction factor.

Procedure Weigh accurately 0.5 g of the content, obtained under the test of weight variation, distill with steam, collect about 400 ml of distillate, extract with successive quantities of 60 ml, 40 ml, 40 ml, and 30 ml chloroform, combine the chloroform extracts, dehydrate with 2 g of anhydrous sodium sulfate, filter, wash sodium sulfate and container with 10 ml of chloroform in portions, filter. Combine all of the chloroform filtrates, recover chloroform at 70℃ on a water bath to a quantity, transfer to a 5 ml volumetric flask, dilute with chloroform to volume, and shake well. Measure accurately 2 ml of the solution to a 5 ml volumetric flask, add 2 ml of internal standard solution, dilute with chloroform to volume, and shake well. Inject 1 μl into the column, and calculate the content.
It contains not less than 1.2 mg of paeonol ($C_9H_{10}O_3$) per capsule, referred to Cortex Moutan.

Action To promote blood circulation to resolve stagnated blood and disintegrate abdominal masses.

Indications Abdominal masses, dysmenorrhea and lochiorrhea; hysteromyoma, chronic pelvic inflammatory disease with lumps, dysmenorrhea, endometriosis and cophoritic cyst with above symptoms.

Usage and dosage 3 capsules, 3 times a day after meals, not taken in menstrual periods, 3 months making one course of treatment, or follow doctor's advice.

Precaution It is forbidden to prescribe to pregnant women or follow doctor's advice. Gastric discomfort and dull pain are seen in some patients, and they may disappear after ceasation of medication.

Strength 0.31 g per capsule

Storage Preserve in tightly closed containers.

Guizhi Fuling Wan
(桂枝茯苓丸)

Guizhi Fuling Pills

Ingredients Ramulus Cinnamomi 100 g; Poria 100 g; Cortex Moutan 100 g; Radix Paeoniae Rubra 100 g; Semen Persicae 100 g.

Procedure Pulverize the five ingredients to fine powder, sift, and mix well. To each 100 g of the powder add 90-110 g of refined honey to make to big honeyed pills.

Description Dark brown big honeyed pills; taste, sweet.

Identification (1) Microscopical: Irregular branched masses colourless, dissolved in chloral hydrate solution; hyphae colourless or pale brown, 4-6 μm in diameter. Radial-longitudinal sections of ray cells subsquare or rectangular, walls beaded, usually adjacent to xylem fibres. Stone cells orange-yellow, conchoidal, walls relatively thickened, pits distinct on the wider side.
(2) Cut 6 g into pieces, add 50 ml of ether and heat under reflux at lower temperature for 1 hour, and filter. Evaporate the filtrate to dryness, and dissolve the residue in 1 ml of ethanol as the test solution. Dissolve a quantity of cinnamaldehyde CRS in ethanol to produce a solution containing 1 μg per ml as the reference solution. Carry out the method for thin layer chromatography (Appendix Ⅵ B), using silica gel G as the coating substance and a mixture of petroleum ether (60-90℃) and ethyl acetate (17 : 3) as the mobile phase. Apply separately 10 μl of the test solution and 2 μl of the reference solution to the plate. After developing and removal of the plate, dry in air. Spray with dinitrophenylhydrazine TS in ethanol. The spot in the chromatogram obtained with the test solution corresponds in position and colour to the spot in the chromatogram obtained with the reference solution.
(3) Dissolve a quantity of paeonol CRS in ethanol to produce a solution containing 1 mg per ml as the reference solution. Carry out the method for thin layer chromatography (Appendix Ⅵ B), using silica gel G as the coating substance, and a mixture of cyclohexane and ethyl acetate (3 : 1) as the mobile phase. Apply separately 10 μl of each of the reference solution and the test solution obtained under Identification (2) to the plate. After developing and removal of the plate, dry in air. Spray with 5% ferric chloride in ethanol acidated with hydrochloric acid and heat to the spots distinct. The spot in the chromatogram obtained with the test solution corresponds in the position and colour to the spot in the chromatogram obtained with the reference solution.
(4) To the residue obtained under Identification (2), add 20 ml of ethanol, ultrasonicate for 15 minutes, filter and evaporate the filtrate to dryness. Dissolve the residue in 15 ml of water, extract with two 20-ml quantities of *n*-butanol saturated with water. Combine the extracts, wash with water twice, each 10 ml, discard the washings, and evaporate the *n*-butanol extract to dryness. Dissolve the residue in 1 ml of ethanol as the test solution. Dissolve a quantity of paeoniflorin CRS in ethanol to produce a solution containing 1 mg per ml as the reference solution. Carry out the method for thin layer chromatography (Appendix Ⅵ B), using silica gel G as the coating substance and a mixture of chloroform, ethyl acetate, methanol and formic acid (40 : 5 : 10 : 0.2) as the mobile phase. Apply separately 10 μl of the test solution and 5 μl of the reference solution to the plate. After

developing and removal of the plate, dry in air. Spray with 5% vanillin in sulfuric acid, heat to the spots clear. The blue-violet spot in the chromatogram obtained with the test solution corresponds in position to the spot in the chromatogram obtained with the reference solution.

Other requirements Comply with the general requirements for pills (Appendix Ⅰ A).

Assay Carry out the method for high performance liquid chromatography (Appendix Ⅵ D).

Chromatographic System and System Suitability Use octadecyl-silane bonded silica gel as the stationary phase and a mixture of acetonitrile and 0.1% phosphoric acid (30 : 70) as the mobile phase. As detector a spectrophotometer set at 285 nm. The number of theoretical plates of the column is not less than 2000, calculated with reference to the peak of cinnamic acid.

Reference solution Dissolve a quantity of cinnamic acid CRS, accurately weighed, in 50% methanol in an amber volumetric flask to produce a solution containing 5 μg per ml as the reference solution.

Test solution Cut the pills into pieces and mix well. Weigh accurately 10 g to a stopper conical, add accurately 50 ml of 50% methanol, tightly stopper and weigh, ultrasonicate (power, 250 W; frequency, 33 kHz) for 30 minutes, allow to cool and weigh again. Replenish the lost weight with 50% methanol, and mix well. Filter, and use the successive filtrate as the test solution.

Procedure Inject accurately 10 μl of each of the reference solution and the test solution into the column, and calculate the content.
It contains not less than 72 μg of cinnamic acid ($C_9H_8O_2$) per pill, referred to Ramulus Cinnamomi.

Action To promote blood circulation to resolve stagnated blood and disintegrate masses.

Indications Persistent abdominal masses or dysmenorrhea and lochiorrhea due to stagnated blood.

Usage and dosage 1 pill, 1-2 times a day.

Precaution Be cautious about pregnant women.

Strength 6 g per pill

Storage Preserve in tightly closed containers.

Gujing Wan
(固经丸)

Gujing Pills

Ingredients Cortex Phellodendri Chinensis (stir-baked with salt) 300 g; Radix Scutellariae (stir-baked with wine) 200 g; Cortex Ailanthi (stir-baked) 150 g; Rhizoma Cyperi (processed with vinegar) 150 g; Radix Paeoniae Alba (stir-baked) 300 g; Carapax et Plastrum Testudinis (processed) 400 g.

Procedure Pulverize the above six ingredients to fine powder, sift and mix well. Make pills with water and dry.

Description Yellow to yellowish-brown watered pills; taste, bitter.

Identification (1) Microscopical: Fibre bundles bright yellow, surrounded by cells containing prisms of calcium oxalate, forming crystal fibre, crystal cell walls lignified and thickened. Bast fibres pale yellow, fusiform, walls thickened with fine pit-canals. Clusters of calcium oxalate, 18-32 μm in diameter, occurring in parenchymatous cells, often arranged in rows or several clusters in one cell. Stone cells subrounded or subpolygonal, lumina containing prisms of calcium oxalate. Irregular masses greyish-yellow, with fine striations or pores. Secretory cells subrounded, containing yellowish-brown to reddish-brown secretions, surrounded by cells arranged radially.
(2) Pulverize well 10 g of the pills, add 50 ml of ether, stopper closely, macerate for 1 hour, shaking constantly and filter. Evaporate the filtrate to dryness. Dissolve the residue in 0.5 ml of ethyl acetate as the test solution. Dissolve a quantity of α-cyperone CRS in ethyl acetate to produce a solution containing 1 mg per ml as the reference solution. Carry out the method for thin layer chromatography (Appendix Ⅵ B), using silica gel GF_{254} as the coating substance and a mixture of petroleum ether (60-90℃) and ethyl acetate (17 : 3) as the mobile phase. Apply separately 5 μl of each of the two solutions to the plate. After developing and removal of the plate, dry in air. Examine under ultraviolet light at 254 nm. The fluorescent spot in the chromatogram obtained with the test solution corresponds in position and colour to the spot in the chromatogram obtained with the reference solution. Spray with dinitrophenylhydrazine TS. Examine under sunlight, the spot in the chromatogram obtained with the test solution corresponds in position and colour to the spot in the chromatogram obtained with the reference solution.
(3) Grind well 0.5 g of the pills, add 10 ml of methanol, ultrasonicate for 15 minutes and filter, use the filtrate as the test solution. Dissolve a quantity of berberine hydrochloride CRS in methanol to produce a solution containing 0.5 mg per ml as the reference solution. Carry out the method for thin layer chromatography (Appendix Ⅵ B), using silica gel G as the coating substance and a mixture of benzene, ethyl acetate, methanol, isopropanol and concentrated ammonia (12 : 6 : 3 : 3 : 1) as the mobile phase, pre-equilibriated the chamber with ammonia for 15 minutes. Apply separately 2 μl of the test solution and 1 μl of the reference solution to the plate. After developing and removal of the plate, dry in air, and examine under ultraviolet light at 365 nm. The yellow fluorescent spot in the chromatogram obtained with the test solution corresponds in position and colour to the spot in the chromatogram obtained with the reference solution.
(4) To the drug residue, obtained under Identification (2) and extracted with ether, add 20 ml of ethanol, ultrasonicate for 15 minutes and filter. Evaporate the filtrate to dryness, dissolve the residue in 1 ml of ethanol as the test solution. Dissolve a quantity of paeoniflorin CRS in ethanol to produce a solution containing 1 mg per ml as the reference solution. Carry out the method for thin layer chromatography (Appendix Ⅵ B), using silica gel G as the coating substance and a mixture of chloroform, ethyl acetate, methanol and formic acid (40 : 5 : 10 : 0.2) as the mobile phase. Apply separately 8 μl of the test solution and 4 μl of the reference solution to the plate. After developing and removal of the plate, dry in air, spray with 5% vanillin in sulfuric acid and visualize under a current of hot air. The bluish-purple colour spot in the chromatogram obtained with the test solution corresponds in position and colour to the spot in the chromatogram obtained with the reference solution.

Other requirements Comply with the general requirements for pills (Appendix Ⅰ A).

Action To nourish *yin* and clear heat, and to arrest uterine bleeding and leukorrhagia.

Indications Advanced menstrual cycles with profuse menstrual blood, dark purple in colour, or red and white leukorrhea due to heat in the blood from *yin* deficiency.

Usage and dosage 6 g, twice a day.

Storage Preserve in well closed containers, protected from moisture.

Guogong Jiu (国公酒)

Guogong Wine

Ingredients Radix Angelicae Sinensis; Rhizoma et Radix Notopterygii; Radix Achyranthis Bidentatae; Radix Saposhnikoviae; Radix Angelicae Pubescentis; Cortex Moutan; Herba Pogostemonis; Semen Arecae; Radix Ophiopogonis; Pericarpium Citri Reticulatae; Cortex Acanthopanacis; Cortex Magnoliae Officinalis (processed with ginger juice); Flos Carthami; Rhizoma Arisaematis (processed with alum); Fructus Lycii; Radix Angelicae Dahuricae; Radix Paeoniae Alba; Radix Arnebiae seu Lithospermi; Fructus Psoraleae (processed with salt); Pericarpium Citri Reticulatae Viride (stir-baked with vinegar); Rhizoma Atractylodis Macrocephalae (stir-baked with bran); Rhizoma Chuanxiong; Fructus Chaenomelis; Fructus Gardeniae; Rhizoma Atractylodis (stir-baked); Fructus Aurantii (stir-baked with bran); Radix Linderae; Fructus Citri Sarcodactylis; Rhizoma Polygonati Odorati; Semen Oryzae cum Monasci Medicata Fermentata Rubra.

Procedure Extract the above thirty ingredients and a quantity of honey and brown sugar under reflux for three times, 40 minutes for the first time and 30 minutes each for the second time and the third time, filter, combine the filtrate and allow to stand for 3-4 months. Filter the supernatant, fill the filtrate into bottles and seal.

Description A dark red, clear liquid; odour, aromatic; taste, pungent, sweet and slightly bitter.

Identification (1) Evaporate 100 ml on a water bath until no ethanol smell is perceptible, cool, and wash with 15 ml of water, in portions, place to a separating funnel. Extract with successive quantities of 15, 10, 10 ml of ether, combine the ether extracts and recover the ether. Dissolve the residue in 1 ml of ethanol as the test solution. To 1 g of Fructus Citri Sarcodactylis reference drug add 10 ml of ethanol, stopper well, shake constantly, and macerate overnight, filter. Use the filtrate as the reference drug solution. Carry out the method for thin layer chromatography (Appendix Ⅵ B), using silica gel G as the coating substance and a mixture of benzene and ethyl acetate (9 : 1) as the mobile phase. Apply separately 5 μl of each of the two solutions to the plate. After developing and removal of the plate, dry in air, and examine under ultraviolet light at 365 nm. The fluorescent spots in the chromatogram obtained with the test solution correspond in position and colour to the spots in the chromatogram obtained with the reference drug solution.

(2) Extract the remained water solution extracted with ether obtained under Identification (1) with successive quantities of 15, 10, 10 ml of ethyl acetate. Combine the extracts and evaporate to dryness. Dissolve the residues in 5 ml of methanol as the test solution. Dissolve a quantity of hesperidin CRS in methanol to produce a solution containing 1 mg per ml as the reference solution. Carry out the method for thin layer chromatography (Appendix Ⅵ B), using silica gel G mixed with 0.5% solution sodium hydroxide as the coating substance and a mixture of ethyl acetate, methanol and water (100 : 17 : 13) as the mobile phase. Apply separately 2 μl of each of the two solutions to the plate. After developing to 3 cm and removal of the plate, dry in air. Develop again to 8 cm using the upper layer of a mixture of toluene, ethyl acetate, formic acid and water (20 : 10 : 1 : 1) as the mobile phase. Remove and dry the plate in air. Spray with 1% aluminium chloride in methanol, dry with a current of hot air, examine under ultraviolet light at 365 nm. The fluorescent spot in the chromatogram obtained with the test solution corresponds in position and colour to the spot in the chromatogram obtained with the reference solution.

(3) Extract the remained aqueous solution obtained under Identification (2) with two quantities of *n*-butanol saturated with water (15, 10 ml). Combine the extracts and evaporate to dryness. Dissolve the residue in 10 ml of ethanol, add 1 ml of hydrochloric acid, heat under reflux for 1 hour, then concentrate to 5ml and add 10 ml of water. Extract with 20 ml of petroleum ether (60-90℃), evaporate to dryness. Dissolve the residue in 0.5 ml of ethanol as the test solution. Dissolve a quantity of oleanolic acid CRS in ethanol to produce a solution containing 1 mg per ml as the reference solution. Carry out the method for thin layer chromatography (Appendix Ⅵ B), using silica gel G as the coating substance and a mixture of chloroform and methanol (40 : 1) as the mobile phase. Apply separately 10 μl of the test solution and 5 μl of the reference solution to the plate. After developing and removal of the plate, dry in air, spray with phosphomolybdic acid TS and heat at 105℃ for 5 minutes. The blue spot in the chromatogram obtained with the test solution corresponds in position and colour to the spot in the chromatogram obtained with the reference solution.

(4) Evaporate the aqueous solution obtained under Identification (3), remove *n*-butanol on a water bath, add 10 ml of water and mix well. Apply to the column packed with cation exchange resin (model 732), elute with water until the eluate clear, then elute with 100 ml of 3.5% ammonia solution. Evaporate the eluate to dryness under reduced pressure. Dissolve the residue in 2 ml of methanol as the test solution. Dissolve a quantity of synephrine CRS in methanol to produce a solution containing 1 mg per ml as the reference solution. Carry out the method for thin layer chromatography (Appendix Ⅵ B), using silica gel G as the coating substance and a mixture of chloroform, acetone, methanol and 12% ammonia solution (3 : 3 : 3 : 1) as the mobile phase. Apply separately 10 μl of each of the two solutions to the plate. After developing and removal of the plate, dry in air, spray with 0.5% ninhydrin in ethanol, and heat at 105℃ for 5 minutes. The spot in the chromatogram obtained with the test solution corresponds in position and colour to the spot in the chromatogram obtained with the reference solution.

Ethanol content 55%-60% (Appendix Ⅸ M).

Other requirements Comply with the general requirements for medicinal wines (Appendix Ⅰ M).

Action To disperse *wind* and expel *dampness*, and relax muscles and tendons and activate meridians.

Indications Impediment disease due to *wind*, *cold* and *dampness* with manifestations of painful and leaden joints with difficult impeded movement, numbness of limbs, painful lower back and legs; hemiplegia due to disorders of meridians, deviated mouth and eye, and flaccidity and weakness of the lower limbs.

Usage and dosage 10 ml, twice a day.

Precaution Contraindicated for pregnant women.

Storage Preserve in tightly closed containers, protected from exposure to sunlight.

Heche Dazao Wan
(河车大造丸)

Heche Dazao Pills

Ingredients Placenta Hominis 100 g; Radix Rehmanniae praeparata 200 g; Radix Asparagi 100 g; Radix Ophiopogonis 100 g; Cortex Eucommiae (stir-baked with salt-water) 150 g; Radix Achyranthis Bidentatae (stir-baked with salt-water) 100 g; Cortex Phellodendri Chinensis (stir-baked with salt-water) 150 g; Carapax et Plastrum Testudinis (processed with vinegar) 200 g.

Procedure Pulverize the above eight ingredients to fine powder, sift, and mix well. To each 100 g of the powder add 30-40 g of refined honey and a quantity of water to make to water-honeyed pills, dry; or add 80-100 g of refined honey to make to small or big honeyed pills.

Description Blackish-brown water-honeyed pills, small honeyed pills or big honeyed pills; odour, slightly aromatic; taste, bitter, sweet.

Identification (1) Microscopical: Fibre bundles bright yellow, surrounded by cells containing prisms of calcium oxalate, forming crystal fibres, walls of crystal cells lignified and thickened. Stone cells rectangular or slat-shaped, 50-110 μm in diameter, finely and densely pitted. Stone cells subsquare or rectangular, 30-64 μm in diameter, walls relatively thickened; some thin at one side, pits fine and dense. Sand crystals of calcium oxalate occurring in parenchymatous cells. Parenchyma greyish-brown to blackish-brown, cells mostly shrunken, and each containing a brown nucleus-like mass. Rubber thread strip-shaped or twisted into masses but granular on surface. Irregular masses with uneven surface, sometimes with concentric striations. Irregular pieces greyish-yellow with fine striations or pores.
(2) Pound 10 g with a quantity of water into pieces, add 100-200 ml of water, stir, allow to stand to precipitate. To the yellow precipitate add 10 ml of water, boil and filter. To 2-3 ml of the filtrate add an equal volume of 10% solution of sodium hydroxide, shake well, add dropwise 0.5% solution of cupric sulphate with shaking; a purple or purplish-red colour is produced immediately.
(3) Grind 5 g of small or big honeyed pills, cut into pieces, with 5 g of kieselguhr, or pulverize 3 g of the water-honeyed pills, add 15 ml of ether, ultrasonicate for 15 minutes and filter. To the residue, evaporated ether, add 10 ml of methanol, ultrasonicate for 15 minutes, filter and concentrate the filtrate to about 1 ml as the test solution. Prepare a solution of 0.1 g of Cortex Phellodendri Chinensis reference drug in the same manner as the reference drug solution. Dissolve a quantity of berberine hydrochloride CRS and palmatine hydrochloride CRS in methanol to produce a mixture containing 0.5 mg of each per ml as the reference solution. Carry out the method for thin layer chromatography (Appendix Ⅵ B), using silica gel G mixed with sodium carboxymethyl cellulose as the coating substance and a mixture of benzene, ethyl acetate, methanol, isopropanol and concentrated ammonia TS (12 : 6 : 3 : 3 : 1) as the mobile phase. Apply separately 2 μl of each of the three solutions to the plate. After developing in a chamber pre-equilibrated with ammonia vapour and removal of the plate, dry in air and examine under ultraviolet light at 365 nm. The main fluorescent spots in the chromatogram obtained with the test solution correspond in position and colour to the spots in the chromatogram obtained with the reference drug solution. The fluorescent spots in the chromatogram obtained with the test solution correspond in position and colour to the spots in the chromatogram obtained with the reference solution.
(4) Grind 10 g of small or big honeyed pills, cut into pieces, with 5 g of kieselguhr; or pulverize 6 g of the water-honeyed pills. Add 30 ml of ethanol and ultrasonicate for 30 minutes, filter, wash the residue with ethanol to about 30 ml, add 2 ml of hydrochloric acid, heat under reflux for 1 hour, concentrate the filtrate to about 5 ml, add 10 ml of water, extract with 20 ml of petroleum ether (60-90℃), recover petroleum ether from the filtrate and dissolve the residue in 1 ml of ethanol as the test solution. Dissolve a quantity of oleanolic acid CRS in ethanol to produce a solution containing 1 mg per ml as the reference solution. Carry out the method for thin layer chromatography (Appendix Ⅵ B), using silica gel H mixed with sodium carboxymethyl cellulose as the coating substance and a mixture of chloroform and methanol (40 : 1) as the mobile phase. Apply separately 2 μl of the test solution and 4 μl of the reference solution to the plate. After developing in a chamber pre-equilibrated with the mobile phase and removal of the plate, dry in air. Spray with phosphomolybdic acid TS and heat at 110℃ for about 10 minutes. The blue spot in chromatogram obtained with the test solution corresponds in position and colour to the spot in the chromatogram obtained with the reference solution.

Other requirements Comply with the general requirements for pills (Appendix Ⅰ A).

Action To nourish *yin* and clear *fire*, and reinforce the *kidney* and *lung*.

Indications Coughing in consumptive diseases, bone-steaming with hectic fever, night sweating and seminal emission, and aching and weakness in the lower back and knees due to deficiency in the lung and kidney.

Usage and dosage 6 g of water-honeyed pills; 9 g of small honeyed pills; or 1 pill for big honeyed pills; twice a day.

Strength 9 g per big honeyed pill

Storage Preserve in tightly closed containers.

Hedan Pian
(荷丹片)

Hedan Tablets

Ingredients Folium Nelumbinis; Radix Salviae Miltiorrhizae; Fructus Crataegi; Folium Sennae; Fructus Psoraleae (stir-baked with salt water).

Procedure Macerate Folium Sennae with 90℃ of hot water 3 times, 30 minutes for each time, combine the macerating solution and filter, reserve the filtrate for later use. Pulverize Radix Salviae Miltiorrhizae to coarse powder, heat the powder under reflux with ethanol for 1.5 hours, filter, recover the ethanol, and reserve for later use. Decoct Folium Nelumbinis, Fructus Crataegi, Fructus Psoraleae and the residue of Radix Salviae Miltiorrhizae with water twice, 2 hours for each time; filter, combine the filtrate and concentrate it to a thin extract with a relative density of 1.20 (60℃); allow to stand until the temperature drop to 40℃, add two volumes of ethanol, stir thoroughly. Allow to stand for 48 hours, filter the supernatant, and recover the ethanol of the filtrate. Combine this solution with the above ethanol extract of Radix Salviae Miltiorrhizae, concentrate to an appropriate amount, dry in spraying; add a quantity of excipient, mix thoroughly and make to granules. Make to 2500 tablets, coated with sugar; or make to 1000 tablets, coated with film.

Description Sugar coated or film coated tablets with brown to dark brown core; taste, slightly bitter.

Identification (1) Place 10 tablets, coated with sugar, or 4 tablets, coated with film, remove the coats, triturate to fine powder; add 10 ml of ammonia TS, and extract with three 30-ml quantities of chloroform, combine the chloroform solution and concentrate to about 10 ml. Extract the chloroform solution with 5 ml of 0.01 mol/L solution of hydrochloric acid, discard the chloroform, and adjust the pH value of the acidic solution to 9-10 with concentrated ammonia TS, extract with three 10-ml quantities of chloroform, combine the chloroform and evaporate to dryness; dissolve the residue in 1 ml of chloroform as the test solution. Dissolve a quantity of nuciferine CRS in chloroform to prepare a solution containing 0.1 mg per ml as the reference solution. Carry out the method for thin layer chromatography (Appendix Ⅵ B), using silica gel G mixed with sodium carboxymethylcellulose as the coating substance and a mixture of *n*-butanol, acetic acid and water (4 : 1 : 1) as the mobile phase. Apply separately 10 μl of each of the test solution and the reference solution to the plate. After developing and removal of the plate, and dry in air. Spray with dilute potassium iodobismuthate TS. The spot in the chromatogram obtained with the test solution corresponds in position and colour to the spot in the chromatogram obtained with the reference solution.

(2) Place 5 tablets, coated with sugar, or 2 tablets, coated with film, remove the coats, triturate to fine powder; add 30 ml of a mixture of methanol and ethyl acetate (1 : 1), and heat under reflux for 15 minutes, allow to stand to cool, and filter; evaporate the filtrate to dryness, dissolve the residue in 2 ml of methanol as the test solution. Dissolve a quantity of psoralen CRS and isopsoralen CRS in methanol to prepare a mixture containing 0.4 mg of each per ml as the reference solution. Carry out the method for thin layer chromatography (Appendix Ⅵ B), using silica gel G mixed with sodium carboxyme thylcellulose as the coating substance and a mixture of *n*-hexane and ethyl acetate (4 : 1) as the mobile phase. Apply separately 5 μl of each of the test solution and the reference solution to the plate. After developing and removal of the plate, and dry in air. Spray with 4% sodium hydroxide in ethanol and examine under ultraviolet light at 365nm. The fluorescent spots in the chromatogram obtained with the test solution correspond in position and colour to the spots in the chromatogram obtained with the reference drug solution.

(3) Heat under reflux of 0.5 g of Folium Sennae with 15 ml of methanol for 15 minutes, allow to stand to cool and filter, evaporate the filtrate to dryness; dissolve the residue in 15 ml of water and filter, extract the filtrate with two 15-ml quantities of chloroform, combine the chloroform and extract with 25 ml of 5% solution of sodium carbonate, discard the chloroform, adjust pH to 2 with hydrochloric acid, then extract with 30 ml of chloroform, wash the chloroform extract with two 30-ml quantities of water; evaporate the chloroform to dryness, dissolve the residue in 1 ml of methanol as the reference drug solution. Carry out the method for thin layer chromatography (Appendix Ⅵ B), using silica gel G mixed with sodium carboxymethylcellulose as the coating substance and a mixture of *n*-hexane, ethyl acetate and formic acid (3 : 1 : 0.1) as the mobile phase. Apply separately 10 μl of each of the test solution, obtained under Identification (2), and the reference drug solution to the plate. After developing and removal of the plate, and dry in air. The spots in the chromatogram obtainde with the test solution correspond in position and colour to the spots in the chromatogram obtained with the reference drug solution; the spot turn into red on exposure to ammonia vapour.

Other requirements Comply with the general requirements for tablets (Appendix Ⅰ D).

Assay Carry out the method for high performance liquid chromatography (Appendix Ⅵ D).

Chromatographic system and system suitability Use octadecylsilance bonded silica gel as the stationary phase and a mixture of acetonitrile, triethylamine, glacial acetic acid and water (27 : 1.8 : 0.78 : 70.6) as the mobile phase. As detector a spectrophotometer set at 270nm. The number of theoretical plates of the column is not less than 2000, calculated with the reference to the peak of nuciferine.

Reference solution Dissolve a quantity of nuciferine CRS, accurately weighed, in ethanol to prepare a solution containing 16 μg per ml.

Test solution place 20 tablets, removed the coats, weigh accurately and triturate to fine powder; weigh accurately 0.4 g of the powder, macerate with 5 ml of ammonia TS, heat under reflux with 60 ml of chloroform for 3 hours; allow to stand to cool and transfer to a separating funnel, separate the chloroform, and extract the water layer with three 25-ml quantities of chloroform, combine the chloroform and evaporate to dryness. Dissolve the residue in ethanol and transfer to a 10 ml of volumetric flask, dilute with the same solvent to the volume; filter, and use the successive filtrate as the test solution.

Procedures Inject accurately 20 μl of each of the reference solution and the test solution into the column, and calculate the content.

It contains not less than 0.10 mg of nuciferine ($C_{19}H_{21}NO_3$) per tablet for sugar coating tablets, or not less than 0.25 mg per ml for film coating tablets, referred to Folium Nelumbinis.

Action To resolve *phlegm* and send down turbidity, and promote blood circulation to resolve stasis.

Indications Hyperlipemia due to *phlegm* and stasis.

Usage and dosage 5 tablets of sugar-coated tablets, 2 tablets of film-coated tablets; 3 times a day, taken on an empty stomach, 8 weeks making one course of treatment or follow doctor's advice.

Precaution Diarrhea, nausea and thirsty are seen sometimes. It is forbidden to prescribe to patients with loose stools and pregnant women.

Strength 0.73 g per tablet for film coating tablets

Storage Preserve in tightly closed containers.

Heye Wan
(荷叶丸)

Heye Pills

Ingredients Folium Nelumbinis 320 g; Nodus Nelumbinis Rhizomatis 64 g; Herba seu Radix Cirsii Japonici (carbonized) 48 g; Herba Cirsii (carbonized) 48 g; Rhizoma Anemarrhenae 64 g; Radix Scutellariae (carbonized) 64 g; Radix Rehmanniae (carbonized) 96 g; Petiolus Trachycarpi (carbonized) 96 g; Fructus Gardeniae (charred) 64 g; Rhizoma Imperatae (carbonized) 96 g; Radix Scrophulariae 96 g; Radix Paeoniae Alba 64 g; Radix Angelicae Sinensis 32 g; Chinese Ink 8 g.

Procedure Carbonize 160 g of Folium Nelumbinis. Mix the other 160 g of Folium Nelumbinis with 240 g of yellow rice wine in a well closed container, stew on a water bath until the wine is absorbed, and dry at a lower temperature. Pulverize both the processed Folium Nelumbinis and the other thirteen ingredients to fine powder, sift, and mix

well. To each 100 g of the powder add 140-150 g of refined honey to make big honeyed pills.

Description Black big honeyed pills; odour, slight; taste, sweet, then slightly bitter.

Identification (1) Microscopical: Starch granules nearly oblong, slightly broad at one end, some prominent at one side, up to about 30 μm in diameter, hilum V-shaped or cleft at the broad end, striations distinct. The upper epidermal cells of leaf polygonal, and the outer walls papillated. Clusters of calcium oxalate up to about 40 μm in diameter, occurring in mesophyll. Needle crystals of calcium oxalate in bundles or scattered, 26-110 μm long. Clusters of calcium oxalate 18-32 μm in diameter, occurring in parenchymatous cells, usually in rows or several clusters in one cell. Phloem fibres pale yellow, fusiform, walls thickened, with fine pit canals. Fibre bundles brown, rounded cells on the surface containing silica bodies. Stone cells of testa yellow or pale brown, mostly broken, when whole, long polygonal, rectangular or irregular, walls thickened, with big rounded pits, lumina brownish-red. Stone cells yellowish-brown or colourless, subrectangle, subrounded or irregular, with distinct striations, up to about 94 μm in diameter. Epidermal cells arranged longitudinally, with 1 long cell connected with 2 short cells; walls of long cells sinuous, slightly thickened, and lignified. Irregular masses brownish-black or black.
(2) Grind well 18 g of the pills, cut to pieces, with 15 g of kieselguhr, add 100 ml of ether, allow to stand for 1 hour and shake constantly. Filter and evaporate the filtrate to dryness, dissolve the residue in 1 ml of ethanol as the test solution. To 0.2 g of Radix Angelicae Sinensis reference drug, add 10 ml of ethanol, ultrasonicate for 5 minutes, filter and use the filtrate as the reference drug solution. Carry out the method for thin layer chromatography (Appendix Ⅵ B), using silica gel G as the coating substance and a mixture of *n*-hexane and ethyl acetate (9 : 1) as the mobile phase. Apply 2 μl of the test solution and 1 μl of the reference drug solution separately to the plate. After developing and removal of the plate, dry in air, and examine under ultraviolet light at 365 nm. The fluorescent spots in the chromatogram obtained with the test solution correspond in position and colour to the spots in the chromatogram obtained with the reference drug solution.
(3) Heat under reflux 18 g of the pills, cut to pieces and ground well with 15 g of kieselguhr, in 100 ml of ethanol for 1 hour. Filter and evaporate the filtrate to dryness, macerate the residue in ether for three times, 15 ml for each (about 3 minutes), discard the ether solution. Dissolve the residue in 30 ml of water, add 1 ml of hydrochloric acid and heat under reflux for 1 hour. Allow to cool, transfer to a separating funnel, extract with three 20-ml quantities of *n*-butanol. Combine the *n*-butanol extracts and evaporate to dryness, and dissolve the residue with 5 ml of ether. Apply the ether solution to a column packed with aluminium oxide (200-300 mesh, 5 g, 1 cm in diameter), elute with 15 ml of ether, collect the eluate, evaporate to dryness and add 1 ml of ethanol to dissolve the residue as the test solution. Dissolve a quantity of sarsasapogenin CRS in ethanol to produce a solution containing 1 mg per ml as the reference solution. Carry out the method for thin layer chromatography (Appendix Ⅵ B), using silica gel G as the coating substance and a mixture of benzene and acetone (9 : 1) as the mobile phase. Apply 10 μl of the test solution and 2 μl of the reference drug solution separately to the plate. After developing and removal of the plate, dry in air, spray with a freshly prepared mixture solution of 8% vanillin in a mixture of dehydrated ethanol and sulfuric acid (7→10) (5 : 1), visualize with a current hot air to the spots clear. The yellow spot in the chromatogram obtained with the test solution corresponds in position and colour to the spot in the chromatogram obtained with the reference solution.

Other requirements Comply with the general requirements for pills (Appendix Ⅰ A).

Assay Carry out the method for High performance liquid chromatography (Appendix Ⅵ D).

Chromatographic system and system suitability Use octadecylsilane bonded silica gel as the stationary phase and a mixture of acetonitrile and water (15 : 85) as the mobile phase. As detector a spectrophotometer set at 230 nm. The number of theoretical plates of the column is not less than 2500, calculated with the reference to the peak of paeoniflorin.

Reference solution Weight accurately a quantity of paeoniflorin CRS, dissolve in methanol to produce a solution containing 50 μg per ml.

Test solution Weigh accurately 5 g, obtained under the test of weight variation and cut into pieces, to a stopper conical flask, accurately add 50 ml of methanol, stopper and weight, ultrasonicate (power, 250 W; frequency, 33 kHz) for 30 minutes, allow to cool, weight again, replenish the loss weight of solvent with methanol, mix well, filter and use the successive filtrate as the test solution.

Procedure Inject accurately 10 μl of each of the reference solution and the test solution, respectively, into the column, and calculate the content.
It contains not less than 2.0 mg of paeoniflorin ($C_{23}H_{28}O_{11}$) per pill, referred to Radix Paeoniae Alba.

Action To cool blood and arrest bleeding.

Indications Hemoptysis, epistaxis, hematuria, hematochezia, metrorrhagia and metrostaxis.

Usage and dosage 1 pill, 2-3 times a day.

Strength 9 g per pill

Storage Preserve in tightly closed containers.

Hongling San
(红灵散)

Hongling Powder

Ingredients Moschus 60 g; Realgar 120 g; Cinnabaris 200 g; Borax 120 g; Lapis Micae Aureus (calcined) 80 g; Saltpetre (refined) 200 g; Borneolum Syntheticum 60 g.

Procedure Levigate Realgar and Cinnabaris to very fine powder. Pulverize Borax, Lapis Micae Aureus and Saltpetre to fine powder. Triturate Moschus and Borneolum Syntheticum with the powders mentioned above, sift and mix well.

Description A brown to reddish-brown powder; odour, strongly aromatic; taste, slightly bitter.

Identification (1) Microscopical: Amorphous masses pale yellowish-brown, embedded with small prisms.
(2) Heat 0.6 g in a crucible. Cover the crucible with a piece of slide while fuming and heat until the combustion finish. Cool for a while, remove the slide into a beaker, add separately 5 ml of water to dissolve the residue in the crucible and the condensate on the slide. Add 0.5 ml of acidic stannous chloride TS and 1.5 ml of hydrochloric acid respectively to both the beaker and the crucible, heat over a small flame to boil gently. Cool for a while, put a piece of polished and clean copper plate (treated with nitric acid, cleaned and abraded with fine abrasive paper) to each container respectively. After the colour of copper plates

changed, take it out, wash and absorb the water on the surface of the copper plates with filter paper. The copper plate in the crucible shows silver-white, while the copper plate in the beaker shows black or blackish-grey colour.
(3) Place 0.5 g in a crucible, cover it with a watch glass and heat with a small flame for sublimation. To the sublimate add 1-2 drops of 1% solution of vanillin in sulfuric acid, a pink colour is produced gradually on the border of the drop.

Other requirements Comply with the general requirements for powders (Appendix Ⅰ B).

Action To expel *summer-heat*, resuscitate, and cure epidemics and relieve *toxicity*.

Indications Syncope due to sunstroke, dizziness, constriction in the chest, nausea, vomiting, abdominal pain with diarrhea.

Usage and dosage 0.6 g, once a day.

Precaution Contraindicated for pregnant women.

Storage Preserve in tightly closed containers.

Hongyao Tiegao (红药贴膏)

Hongyao Plaster

Ingredients Radix et Rhizoma Notoginseng; Radix Angelicae Dahuricae; Eupolyphaga seu Steleophaga; Rhizoma Chuanxiong; Radix Angelicae Sinensis; Flos Carthami; Borneolum Syntheticum; Camphorum; Methyl Salicylate; Mentholum; Extractum Belladonnae Liquidum; Chondroitin Sulfate; Benadryl hydrochloride.

Procedure Break Radix et Rhizoma Notoginseng, Radix Angelicae Dahuricae, Eupolyphaga seu Steleophaga, Rhizoma Chuanxiong, Radix Angelicae Sinensis and Flos Carthami into pieces, extract with 90% ethanol under reflux three times, using 4 times volume of ethanol for 2 hours for the first time, and 3 times volume of ethanol for 1 hour for the second and third time respectively. Allow to stand and filter after each extraction. Combine the filtrates, recover ethanol, concentrate in vacuum to a extract with a relative density of 1.30-1.40 (40℃). To the matrix prepared with rubber and zinc oxide, add the above extract and other seven ingredients, and quantities of dimethyl sulfoxide, essence and carmine, stir well to prepare coating material. Spread the paste, cover with lining and cut into pieces.

Description Pale red pieced plasters; odour, aromatic.

Identification (1) To 1 piece of the drug, removed of the covering liner and cut into pieces, in a conical flask with a stopper, add 30 ml of ethanol, ultrasonicate for 15 minutes, filter and evaporate the filtrate to dryness on a water bath at 40℃, dissolve the residue in 5 ml of petroleum ether (30-60℃), use the supernatant as the test solution. To 0.5 g of each of Radix Chuanxiong reference drug and Radix Angelicae Sinensis reference drug, add 10 ml of petroleum ether (30-60℃), respectively, ultrasonicate for 15 minutes, filter, and use the filtrate as the reference drug solutions. Carry out the method for thin layer chromatography (Appendix Ⅵ B), using silica gel G as the coating substance and a mixture of cyclohexane and ethyl acetate (17 : 3) as the mobile phase. Apply separately 3 μl of the test solution and the reference drug solutions to the plate. After developing and removal of the plate, dry in air. Examine under ultraviolet light at 365 nm, the fluorescent spots in the chromatogram obtained with the test solution correspond in position and colour to the spots in the chromatogram obtained with the reference drug solutions.
(2) Dissolve a quantity of a mixture of (±)-borneol and (±)-isoborneol CRS, and menthol CRS in petroleum ether (30-60℃), respectively, to produce two solutions each containing 1 mg per ml as the reference solutions. Carry out the method for gas chromatography (Appendix Ⅵ E). Using 10% polyethylene glycol (PEG)-20M as the stationary phase; maintain the column temperature at 120℃. Inject 1-2 μl of each of the reference solutions and the test solution obtained under Identification (1), separately, into the column. The retention time of the peaks in the chromatogram obtained with the test solution correspond to that in the chromatogram obtained with the reference solutions.

Plaster content Not less than 1.6 g per 100 cm^2 of the plaster (Appendix Ⅰ I).

Other requirements Complies with the general requirements for adhesive plasters of cataplasms (Appendix Ⅰ I).

Action To expel *cold* and generate new blood, and promote blood circulation to kill pain.

Indications Traumatic injury and painful tendons and bones.

Usage and dosage For external use, wash the affected part clean and apply the plaster on, changed the plaster every 1-2 days.

Precaution Be cautious about patients who are sensitive to adhesive plasters or have skin lesion with beleeding.

Storage Preserve in a shady, cool and dry place.

Houtou Jianweiling Jiaonang (猴头健胃灵胶囊)

Houtou Jianweiling Capsules

Ingredients Extractum Hericii Fermentatum; Endoconcha Sepiae; Rhizoma Corydalis (processed); Radix Paeoniae Alba (processed); Rhizoma Cyperi (processed) and Radix et Rhizoma Glycyrrhizae Preparata.

Procedure Decoct Extractum Hericii Fermentatum for 2 times, 2 hours for each time, combine the decoction, filter and concentrate the filtrate to a thin extract with a relative density of 1.04 (70℃). Stand for 24 hours, filter, concentrate the filtrate to a thin extract with a relative density of 1.30 (70℃). To each 100g of the thin extract add 50 g of excipient, mix thoroughly, dry and pulverize to fine powder. Pulverize the other five ingredients to fine powder, sift, mix thoroughly and sterilize. Mix with the above powder and pack.

Description Capsules with content of brown powder; odour, aromatic; taste, sweet, slightly bitter.

Identification (1) To 1 g of the content add 5 ml of water, heat on a 50-60℃ water bath for 1 hour and filter. To the filtrate add 10 ml of alkaline cupric tartrate TS, heat on a water bath for 10 minutes, allow to cool, and filter. To a small quantity of the filtrate add same volume of alkaline cupric tartrate TS, treat as the above method; no precipitate is produced. To a small quantity of the filtrate add 2 ml of hydrochloric acid, boil for 20 minutes, allow to cool, add sodium hydroxide TS to alkalize the solution and add a quantity of alkaline cupric tartrate TS, heat on a water bath for 10 minutes, an orange precipitate is produced.
(2) Heat under reflux about 3.5 g of the content with 60 ml of 70% ethanol for 30 minutes, filter, concentrated the filtrate to about 5ml, filter and use the filtrate as the test solution. Dissolve separately a quantity of glycine CRS, threonine CRS, leucine CRS, valine CRS and histidine CRS

in 70% ethanol to produce the reference solutions respectively each containing 1 mg per ml. Carry out the method for thin layer chromatography (Appendix Ⅵ B), using silica gel G containing sodium carboxymethylcellulose as the coating substances and a mixture of *n*-butanol, glacial acetic acid and water (8 : 3 : 1) as the mobile phase. Apply separately to the plate 5μl of the test solution and 1 μl of each of the reference solutions. After developing and removal of the plate, dry in air. Spray with 0.2% ninhydrine in ethanol, heat at 105℃ to spots distinct. The spots in the chromatogram obtained with the test solution correspond in position and colour to the spots in the chromatogram obtained with the reference solutions.

(3) To 5 g of the content add 50 ml of methanol, ultrasonicate for 30 minutes, filter, and evaporate the filtrate to dryness. Dissolve the residue in a quantity of water, adjust to alkaline with concentrated ammonium TS, and extract with three 10-ml quantities of ether. Combine the ether extracts and evaporate to dryness, dissolve the residue in 1 ml of methanol as the test solution. Prepare a solution of 1 g of Rhizoma Corydalis reference drug in the same manner as the reference drug solution. Dissolve a quantity of tetrahydropalmatine CRS in methanol to produce a solution containing 1 mg per ml as the reference solution. Carry out the method for thin layer chromatography (Appendix Ⅳ B), using silica gel G mixed with a solution of 1% sodium hydroxide as the coating substances, and a mixture of *n*-hexane, chloroform and methanol (15 : 8 : 2) as the mobile phase. Apply separately 2 μl of each of the above three solutions to the plate. After developing and removal of the plate, dry in air. Expose to iodine vapor to the spots clear. The spots in the chromatogram obtained with the test solution correspond in position and colour to the spots in the chromatogram obtained with the reference drug solulion and the reference solution. Examine under ultraviolet light at 365 nm after expelling the absorbed iodine, the fluorescent spots in the chromatogram obtained with the test solution correspond in position and colour to the spots in the chromatogram obtained with the reference drug solution and the reference solution.

Loss on drying When dried to constant weight at 105℃, loses not more than 8.0 per cent of its weight (Appendix Ⅸ G).

Other requirements Comply with the general requirements for capsules (Appendix Ⅰ L).

Assay Carry out the method for high performance liquid chromatography (Appendix Ⅵ D).

Chromatographic system and system suitability Use octadecylsilane bonded silica gel as the stationary phase and a mixture of methanol and water (25 : 75) as the mobile phase. As detector a spectrophotometer set at 230 nm. The number of theoretical plates of the column is not less than 2000, calculated with the reference to the peak of paeoniflorin.

Reference solution Weigh accurately a quantity of paeoniflorin CRS, dissolve with the mobile phase to produce a solution containing 20 μg per ml as the reference solution.

Test solution Weigh accurately 0.5 g of the content, obtained under the test of Packing variation, in a conical flask, add accurately 50 ml of dilute ethanol TS, weigh, shake thoroughly, ultrasonicate for 30 minutes, allow to cool, weigh again and replenish the lost weight with the same solvent. Stand for 30 minutes, shake, filter, and use the successive filtrate as the test solution.

Procedure Inject accurately 10 μl of each of the reference solution and the test solution into the column, and caculate the content.

It contains not less than 0.40 mg of paeoniflorin ($C_{23}H_{28}O_{11}$) per capsule, referred to Radix Paeoniae Alba.

Action To soothe the liver and harmonize the stomach, and regulate *qi* flow to kill pain.

Indications Distending pain in the stomach and hypochondria, vomiting, casting up of gastric acid due to disharmony between the liver and stomach, chronic gastritis, gastroduodenal ulcer with above symptoms.

Usage and dosage 4 capsules, 3 times a day; or follow doctor's advice.

Strengh 0.34 g per capsule

Storage Preserve in well closed containers.

Huaijiao Wan (槐角丸)

Huaijiao Pills

Ingredients Fructus Sophorae (stir-baked) 200 g; Radix Sanguisorbae (carbonized) 100 g; Radix Scutellariae 100 g; Fructus Aurantii (stir-baked) 100 g; Radix Angelicae Sinensis 100 g; Radix Saposhnikoviae 100 g.

Procedure Pulverize the above six ingredients to fine powder, sift and mix well. To each 100 g of the powder add 45-55 g of refined honey and a quantity of water to make water-honeyed pills and dry; or add 130-150 g of refined honey to make small honeyed pills or big honeyed pills.

Description Blackish-brown to black water-honeyed pills, small honeyed pills or big honeyed pills; taste, bitter and astringent.

Identification (1) Microscopical: Palisade cells of testa 1 row, 100-190 μm long. Fibres slender, slightly curved, with slightly thickened and unlignified walls. Phloem fibres pale yellow, fusiform, walls thickened, with fine pit-canals. Vittae containing golden secretion, about 30 μm in diameter.

(2) Grind 9 g of the big honeyed pills or small honeyed pills, cut into pieces, with a equal quantity of kieselguhr, or pulverize 5 g of the water-honeyed pills, add 30 ml of methanol, ultrasonicate for about 20 minutes, and filter. Evaporate the filtrate to dryness. Dissolve the residue with 10 ml of water, then add 3 drops of concentrated ammonia TS, and filter. Add 3 drops of hydrochloric acid to the filtrate, centrifugalize, discard the supernatant. Add 2 ml of the methanol to the precipitate, filter, use the filtrate as the test solution. Dissolve a quantity of baicalin CRS in methanol to produce a solution containing 1 mg per ml as the reference solution. Carry out the method for thin layer chromatography (Appendix Ⅵ B), using silica gel G as the coating substance and a mixture of ethyl acetate, formic acid, methanol and water (6 : 0.3 : 2 : 1) as the mobile phase. Apply separately to the plate 10 μl of the test solution and 5 μl of the reference solution. After developing and removal of the plate, dry in air. Spray with 2% ferric chloride in ethanol. The spot in the chromatogram obtained with the test solution corresponds in position and colour to the spot in the chromatogram obtained with the reference solution.

(3) Grind 4 g of the big honeyed pills or small honeyed pills, cut into pieces, with a equal quantity of kieselguhr, or pulverize 2.5 g of the water-honeyed pills, add 15 ml of ethanol, macerate for about 1 hour with shaking constantly, filter, and use the filtrate as the test solution. Prepare a solution of 0.2 g of Radix Angelicae Sinensis reference drug and 15 ml of ethanol in the same manner as the reference

drug solution. Carry out the method for thin layer chromatography (Appendix Ⅵ B), using silica gel G as the coating substance and a mixtrue of *n*-hexane and ethyl acetate (9 : 1) as the mobile phase. Apply separately 10 μl of the test solution and 2 μl of the reference drug solution to the plate. After developing and removal of the plate, dry in air, and examine under ultraviolet light at 365 nm. The fluorescent spots in the chromatogram obtained with the test solution correspond in position and colour to the spots in the chromatogram obtained with the reference drug solution.

(4) Grind 4 g of the big honeyed pills or small honeyed pills, cut into pieces, with a equal quantity of kieselguhr, or pulverize 2.5 g of the water-honeyed pills, heat under reflux in 20 ml of chloroform and 1 ml of concentrated ammonia TS for 1 hour, and filter. Evaporate the filtrate to dryness. Dissolve the residue in 1ml of methanol as the test solution. Prepare a solution of 0.5 g of Radix Saposhnikoviae reference drug in the same manner as the reference drug solution. Carry out the method for thin layer chromatography (Appendix Ⅵ B), using silica gel G as the coating substance and a mixture of petroleum ether (60-90℃) and ethyl acetate (4 : 1) as the mobile phase. Apply separately to the plate 10 μl of the test solution and 2 μl of the reference drug solution. After developing and removal of the plate, dry in air, and examine under ultraviolet light at 365 nm. The bluish-purple colour fluorescent spots in the chromatogram obtained with the test solution correspond in position and colour to the spots in the chromatogram obtained with the reference drug solution.

(5) Grind 1.5 g of water-honeyed pills; or grind 2 g of small honeyed pills or big honeyed pills, cut into pieces, with equal portion of kieselguhr. Macerate the powder in 20 ml of petroleum ether (30-60℃) for 2 hours, with frequently shaking, filter and discard the petroleum ether solution. To the residue, expel the solvent, add 20 ml of methanol, ultrasonicate for 30 minutes, filter, and evaporate the filtrate to dryness. Dissolve the residue in 0.5 ml of water, apply to a column (0.8-1 cm in inner diameter), packed with 2 g of polyamide (40 mesh). Elute with 50 ml of water, discard the water eluate, then elute with 50 ml of ethanol. Collect the ethanolic eluate, evaporate to dryness, dissolve the residue in 1 ml of methanol, used as the test solution. Dissolve a quantity of rutin CRS in methanol to produce a reference solution containing 1 mg per ml. Carry out the method for thin layer chromatography (Appendix Ⅵ B), using silica gel G as the coating substance, and a mixture of ethyl acetate, formic acid and water (8 : 1 : 1) as the mobile phase. Apply separately 3 μl of test solution and 2 μl of the reference solution to the plate. After developing and removal of the plate, dry in air. Spray with 10% aluminum chloride in ethanol, heat to the spots distinct, and examine under ultraviolet light at 365 nm. The fluorescent spot in the chromatogram obtained with test solution corresponds in position and colour to the spot in the chromatogram obtained with the reference drug solution.

Other requirements Comply with the general requirements for pills (Appendix Ⅰ A).

Assay Carry out the method for high performance liquid chromatography (Appendix Ⅵ D).

Chromatographic system and system suitability Use octadecylsilane bonded silica gel as the stationary phase and a mixture of methanol, water and glacial acetic acid (46 : 54 : 1) as the mobile phase. As detector a spectrophotometer set at 280 nm, The number of theoretical plates of the column is not less than 3000, calculated with the reference to the peak of baicalin.

Reference solution Weigh accurately a quantity of baicalin CRS, dissolve in 50% methanol to produce a solution containing 30 μg per ml.

Test solution Pulverize a quantity of water-honeyed pills to a fine powder and mix well, sift through a No. 3 sieve. To 1 g of the powder, weighted accurately, in a 100 ml volumetric flask, add 80 ml of 50% methanol; or grind 1 g of small honeyed pills or big honeyed pills obtained under the test of Weight variation, cut into pieces and weight accurately, in a mortar with 80 ml of 50% methanol by several times, transfer to a 100 ml volumetric flask. Ultrasonicate (power, 250 W; frequency, 33 kHz) for 1 hour, allow to cool, dilute with 50% methanol to volume, shake thoroughly and filter. Measure accurately 5 ml of the successive filtrate in a 10 ml volumetric flask, dilute with 50% methanol to volume, shake thoroughly, filter and use the successive filtrate as the test solution.

Procedure Inject accurately 10 μl of each of the reference solution and the test solution, into the column, and calculate the content.

It contains not less than 2.8 mg of baicalin ($C_{21}H_{18}O_{11}$) per gram for water-honeyed pills, and 4.0 mg per gram for small honeyed pills, and 36.0 mg per big honeyed pill, referred to Radix Scutellariae.

Action To clear intestines and disperse *wind*, and cool blood to stop bleeding.

Indications Passing of bloody stools and swollen painful hemorrhoids due to *blood-heat*.

Usage and dosage 6 g of water-honeyed pills; 9 g of small honeyed pills, 1 big honeyed pill; 2 times a day.

Strength 9 g per big honeyed pill

Storage Preserve in tightly closed containers.

Huaji Koufuye (化积口服液)

Huaji mixture

Ingredients Poria (peeled); Endoconcha Sepiae; Endothelium Corneum Gigeriae Galli (stir-baked); Rhizoma Sparganii (processed with vinegar); Rhizoma Curcumae (processed with vinegar); Flos Carthami; Semen Arecae; Omphalia; Fructus Carpesii; Fructus Quisqualis;

Procedure Pulverize Omphalia and Endothelium Corneum Gigeriae Galli to coarse powder, macerate with warm water for 2 hours, and filter. Distill the residue and the other ingredients with a quantity of water for 2 times, combine the distillate. Decant the water decoction in the residual drug, filter, combine the filtrate, and concentrate. Add ethanol to adjust a content of 65% ethanol, refrigerate overnight, filter, recover ethanol, and dilute with a quantity of water, refrigerate overnight and filter. Make a sugar syrup with 340 g of sucrose, add the above filtrate and 0.5 g of ethyl *p*-hydroxybenzoate, mix well, heat to boil. Allow to cool to 60℃, add the maceration extract, the distillate, and 1ml of orange essence, dilute with water to 1000ml, mix well, and pack.

Description A clear, yellowish-brown liquid; odour, faint aromatic; taste, sweet and slightly bitter.

Identification (1) Extract 140 ml of the mixture with three 90-ml quantities of ether and 2ml of saturated sodium chloride solution, collect the ether extract, evaporate to dryness at a lower temperature. Dissolve the residue in 0.5

ml of *n*-hexane as the test solution. Heat under reflux 4g of Poria reference drug with 50 ml of ether for 1 hour, filter and evaporate to dryness at a lower temperature, dissolve the residue in 0.5 ml of *n*-hexane as the reference drug solution. Carry out the method for thin layer chromatography (Appendix Ⅵ B), using silica gel G as the coating substance and a mixture of petroleum ether (30-60℃), acetone and ethyl acetate (84 : 15 : 1) as the mobile phase, pre-equilibrated for 15 minutes. Apply separately 40 μl of the test solution and 30 μl of the reference drug solution to the plate. After developing and removal of the plate, dry in air, and examine under ultraviolet light at 365 nm. The spots in the chromatogram obtained with the test solution correspond in position and colour to the spots in the chromatograms obtained with the reference drug solution.

(2) Extract 90 ml of the mixture with three 60-ml quantities of *n*-butanol saturated with water, combine the *n*-butanol extract, and evaporate to dryness. Dissolve the residue in 1ml of methanol, centrifuge, and use the supernatant as the test solution. Decoct 1.5 g of Flos Carthami reference drug with 250 ml of water for 1 hour, filter through absorbent cotton immediately. Concentrate the filtrate to about 10 ml, add 10 ml of ethanol, mix well, precipitate, filter, and evaporate the filtrate to dryness. Dissolve the residue in 10 ml of water, prepare a solution in the same manner as above, beginning at the words "extract with three 60-ml quantities of *n*-butanol saturated with water", as the reference drug solution. Carry out the method for thin layer chromatography (Appendix Ⅵ B), using silica gel G as the coating substance and a mixture of chloroform and ether (3 : 2) as the mobile phase, pre-equilibrated for 15 minutes. Apply separately 5 μl of the test solution and 10 μl of the reference drug solution to the plate. After developing and removal of the plate, dry in air. Expose the plate to ammonia vapour for 15 minutes, and examine under ultraviolet light at 365 nm. The fluorescent spots in the chromatogram obtained with the test solution correspond in position and colour to the spots in the chromatogram obtained with the reference drug solution.

(3) Extract 60 ml of the mixture with two 40-ml quantities of ethyl acetate, combine the ethyl acetate extract and apply to a column (1.2 cm in diameter) packed with neutral aluminum oxide (100-200 mesh, 10 g), collect the ethyl acetate, evaporate to dryness, dissolve the residue in 1 ml of methanol as the test solution. Decoct 1 g of Fructus Carpesii reference drug with 60 ml of water for 30 minutes, filter, to filtrate add 2 times volume of ethanol, filter and evaporate the filtrate to no ethanolic smell, add water to 40 ml, extract with ethyl acetate and prepare a solution in the same manner as the reference drug solution. Carry out the method for thin layer chromatography (Appendix Ⅵ B), using silica gel G mixed with sodium carboxymethyl cellulose as the coating substance and a mixture of toluene, ethyl acetate and glacial acetic acid (5 : 4 : 0.1) as the mobile phase. Apply separetely 10 μl of the test solution and 5 μl of the reference drug solutions to the plate. After developing and removal of the plate, dry in air. Examine under ultraviolet light at 365 nm, the fluorescent spots in the chromatogram obtained with the test solution correspond in position and colour to the spots in the chromatogram obtained with the reference drug solutions.

Relative density Not less than 1.10 (Appendix Ⅶ A).

pH value 5.5-7.5 (Appendix Ⅶ G).

Other requirements Complies with the general requirements for mixtures (Appendix Ⅰ J).

***n*-Butanol extractives** Extract 50 ml of the mixture, measured accurately, with five 20-ml quantities of *n*-butanol saturated with water. Combine the *n*-butanol extract, evaporate the *n*-butanol extract in an evaporating dish, previously dried to constant weight, to dryness, dry at 105℃ for 3 hours and allow to cool in a desiccator for 30 minutes, weight accurately and rapidly.

It contains not less than 0.60 per cent of *n*-butanol extractives.

Action To invigorate the spleen to clear retained food, and promote digestion to treat child malnutrition.

Indications Child malnutrition due to deficiency in the spleen and stomach, with manifestations of emaciation and shallow complexion, distending pain in the abdomen, anorexia or poor appetite and bowels disorders.

Usage and dosage 5 ml, twice a day for infants within 1 year old; 10 ml, twice a day for children from 2 to 5 years old; 10 ml, 3 times a day for children over 5 years old; or follow doctors' advice.

Strength 10 ml per phial

Storage Preserve in well closed containers, and store in a cool place.

Huanglian Shangqing Wan (黄连上清丸)

Huanglian Shangqing Pills

Ingredients Rhizoma Coptidis 10 g; Fructus Gardeniae (processed with ginger) 80 g; Fructus Forsythiae 80 g; Fructus Viticis (stir-baked) 80 g; Radix Saposhnikoviae 40 g; Spica Schizonepetae 80 g; Radix Angelicae Dahuricae 80 g; Radix Scutellariae 80 g; Flos Chrysanthemi 160 g; Herba Menthae 40 g; Radix et Rhizoma Rhei (stir-baked with wine) 320 g; Cortex Phellodendri (stir-baked with wine) 40 g; Radix Platycodonis 80 g; Rhizoma Chuanxiong 40 g; Gypsum Fibrosum 40 g; Flos Inulae 20 g; Radix et Rhizoma Glycyrrhizae 40 g.

Procedure Pulverize the above seventeen ingredients to fine powder, sift and mix well. Make watered pills with water and dry; To each 100 g of the powder, add 30-40 g of refined honey and a quantity of water to make water-honeyed pills and dry; To each 100 g of the powder, add 150-170 g of refined honey to make big honeyed pills.

Description Dark yellow to yellowish-brown watered pills, yellowish-brown to dark brown water-honeyed pills or blackish-brown big honeyed pills; odour, aromatic; taste, bitter.

Identification (1) To 50 mg of Rhizoma Coptidis reference drug, add 10 ml of methanol, ultrasonicate for 15 minutes, filter, use the filtrate as the reference drug solution. Dissolve a quantity of berberine hydrochloride CRS in methanol to produce a solution containing 0.05 mg per ml as the reference solution. Carry out the method for thin-layer chromatography (Appendix Ⅵ B), using silica gel G mixed with sodium carboxymethylcellulose as the coating substance and a mixture of benzene, ethyl acetate, methanol, isopropanol and water (20 : 10 : 5 : 5 : 1) as the mobile phase. Apply separately 2 μl of each of the reference drug solution, reference solution and test solution obtained under the Assay to the plate. After developing in a chamber pre-equilibrated with ammonia vapour and removal of the plate, dry in air, and examine under ultraviolet light at 365 nm, the fluorescent spots in the chromatogram obtained with the test solution correspond in position and colour to the spots in the chromatogram obtained with the reference solution and the reference drug solution.

(2) To 3 g of watered pills or water-honeyed pills, grind to

powder, or 4 g of big honeyed pills, cut into pieces, add 25 ml of ethyl acetate, heat under reflux for a hour, filter, dry the filtrate to dryness, dissolve the residue in 1 ml of methanol as the test solution. Dissolve a quantity of geniposide CRS in methanol to produce a solution containing 1 mg per ml as the reference solution. Carry out the method for thin layer chromatography (Appendix Ⅵ B), using silica gel G mixed with sodium carboxymethylcellulose as the coating substance and a mixture of ethyl acetate, acetone, formic acid and water (12 : 8 : 1 : 1) as the mobile phase. Apply separately 5 μl of each of the test solution and reference solution to the plate. After developing and removal of the plate, dry in air, spray with a solution of 10% sulfuric acid in ethanol, heat at 105 ℃ to spots distinct. The spot in the chromatogram obtained with the test solution corresponds in the position and colour to the spot in the chromatogram obtained with the reference solution.

(3) To 5 g of watered pills or water-honeyed pills, ground to powder, or 9 g of big honeyed pills, cut into pieces, add 50 ml of ethyl acetate, heat under reflux for 1 hour, filter and keep the residue for latter use, concentrate the filtrate to about 5 ml, apply to a column (1 cm in diameter) packed with alkaline aluminum oxide (100-200 mesh, 6 g, previously activated at 105℃ for 1 hour). Elute with 50 ml of ethyl acetate, collect the eluates and evaporate to dryness, dissolve the residue in 1 ml of methanol as the test solution. To 0.5 g of Rhizoma Chuanxiong reference drug, add 10 ml of ethyl acetate, ultrasonicate for 15 minutes, filter and use the filtrate as the reference drug solution. Carry out the method for thin layer chromatography (Appendix Ⅵ B), using silica gel G mixed with sodium carboxymethylcellulose as the coating substance and a mixture of *n*-hexane and ethyl acetate (9 : 1) as the mobile phase. Apply separately 5 μl of each of the test solution and reference drug solution to the plate. After developing and removal of the plate, dry in air, examine under ultraviolet light at 365 nm, the fluorescent spots in the chromatogram obtained with the test solution correspond in the position and colour to the spots in the chromatogram obtained with the reference drug solution.

(4) To the drug residue obtained under Identification (3), add 25 ml of the methanol, heat under reflux for 1 hour, filter and use the filtrate as the test solution. Dissolve a quantity of baicalin CRS in methanol to produce a solution containing 1 mg per ml as the reference solution. Carry out the method for thin layer chromatography (Appendix Ⅵ B), using silica gel G mixed with sodium carboxymethylcellulose containing 4% solution of sodium acetate as the coating substance and a mixture of ethyl acetate, butanone, formic acid and water (5 : 3 : 1 : 1) as the mobile phase. Apply separately 5 μl of each of the test solution and reference solution to the plate. After developing and removal of the plate, dry it in air, spray with 1% ferric chloride in ethanol. The spot in the chromatogram obtained with the test solution corresponds in position and colour to the spot in the chromatogram obtained with the reference solution.

Heavy metals Pulverize 15 g of watered pills or water-honeyed pills to a powder; or cut 30 g of big honeyed pills into pieces, weight 1 g accurately, carry out the method of determination of residue on ignition (Appendix Ⅸ J), char thoroughly. To the residue carry out the limit test for heavy metals (Appendix Ⅸ E, method 2), no more than 25 ppm.

Arsenic Take 15 g of watered pills or water-honeyed pills, or 5 g of big honeyed pills, ground well or cut into pieces, pass through No. 2 sieve. To 1.0 g, weighed, add 1 g of arsenic-free calcium hydroxide and a small quantity of water, stir well and bake to dry. Heat gently until it is charred, then ignite at 500-600℃ until the incineration is complete (simultaneously preparing a blank for arsenic standard stain). Allow to cool, dissolve the residue in 7 ml of hydrochloric acid, add 21 ml of water and carry out the limit test for arsenic (Appendix Ⅸ F, method 1), no more than 2 ppm of arsenic.

Other requirements Comply with the general requirements for pills (Appendix Ⅰ A).

Assay Carry out the method for high performance liquid chromatography (Appendix Ⅵ D).

Chromatographic system and system suitability Use octadecylsilane bonded silica gel as the stationary phase and a mixture of acetonitrile and 0.033 mol/L potassium dihydrogen phosphate (35 : 65) as the mobile phase. As detector a spectrophotometer set at 424 nm. The number of theoretical plates of the column is not less than 4000, calculated with the reference to the peak of berberine hydrochloride.

Reference solution Weight accurately a quantity of berberine hydrochloride CRS, dissolve in methanol to produce a solution containing 10 μg per ml.

Test solution Weight accurately 0.6 g of watered pills or water-honeyed pills, ground to powder, or 1 g of big honeyed pills obtained under the test of Weight variation, cut into pieces, to a stopper conical flask, accurately add 10 ml of a mixture of hydrochloric acid and methanol (1 : 100), stopper and weigh, heat in a water bath at 50℃ for 15 minutes, allow to stand to room temperature, ultrasonicate (power, 250 W; frequency, 33 kHz) for 30 minutes, allow to stand to room temperature, weigh again, replenish the loss of weight with methanol, mix well, centrifugate and filter. Measure accurately 2 ml of the successive filtrate, evaporate to dryness at a lower temperature, dissolve the residue in a quantity of methanol and apply to a column (1 cm in diameter) packed with alkaline aluminum oxide (100-200 mesh, 8 g). Elute with 35 ml of methanol, collect the eluates and evaporate to dryness, dissolve the residue in a quantity of methanol and transfer to a 2 ml volumetric flask, dilute with methanol to volume, mix well, filter and use the filtrate as the test solution.

Procedure Inject accurately 5-10 μl of each of the reference solution and the test solution, respectively, into the column, and calculate the content.

It contains not less than 0.26 mg of berberine hydrochloride ($C_{20}H_{18}ClNO_4$) per gram for watered pills; 0.19 mg per gram for water-honeyed pills; and 0.60 mg per big honeyed pill, referred to Rhizoma Coptidis and Cortex Phellodendri.

Action To disperse *wind* and clear *heat*, and purge *fire* to kill pain.

Indications Dizziness, or fulminant conjunctivitis, or toothache, or sores on the mouth and tongue, swollen painful throat, or ear pain, tinnitus, constipation and concentrated urine due to attack of the upper part of the body by *wind-heat* and extremely abundant *heat* in the lung and stomach.

Usage and dosage 1-2 pills, twice a day.

Precaution Avoid pungent and spicy foods; be cautious about pregnant women; it is forbidden to prescribe to those suffering from a deficiency and cold syndrome of the spleen and stomach.

Strength 6 g per bag of watered pill; 3 g per forty water-honeyed pills; 6 g per big honeyed pill

Storage Preserve in tightly closed containers.

Huanglian Yanggan Wan
(黄连羊肝丸)

Huanglian Yanggan Pills

Ingredients Rhizoma Coptidis 20 g; Rhizoma Picrorhizae 40 g; Radix Scutellariae 40 g; Cortex Phellodendri chinensis 20 g; Radix et Rhizoma Gentianae 20 g; Radix Bupleuri 40 g; Pericarpium Citri Reticulatae Viride (stir-baked with vinegar) 40 g; Herba Equiseti Hiemalis 40 g; Flos Buddlejae 40 g; Fructus Leonuri 40 g; Semen Cassiae (stir-baked) 40 g; Concha Haliotidis (calcined) 40 g; Faeces Vespertilionis 40 g; Hepar Caprae seu Ovis Recens 160 g.

Procedure Cut Hepar Caprae seu Ovis Recens into pieces, steam, dry, and pulverize with other thirteen ingredients to fine powder, sift, and mix well. To each 100 g of the powder add 120-150 g of refined honey to make big honeyed pills.

Description Blackish-brown big honeyed pills; taste, bitter.

Identification (1) Microscopical: Fibre bundles bright yellow, walls slightly thickened, pits distinct. Phloem fibres pale yellow, fusiform, walls thickened, with fine pit-canals. Fibre bundles bright yellow, surrounded by cells containing prisms of calcium oxalate, forming crystal fibres, walls of crystal cells thickened and lignified. Prisms of calcium oxalate abundant in parenchyma. Palisade cells of testa 1 row, 40-72 μm long, with several layers of cells underneath containing clusters and prisms of calcium oxalate. Vittae containing yellow or brownish-yellow secretion. Irregular masses dark grey, opaque, bubbling on adding acid.

(2) To 0.02 g Rhizoma Coptidis reference drug, add 10 ml of the mixture of hydrochloric acid and methanol (1 : 100), ultrasonicate for 15 minutes, filter and use the filtrate as the reference drug solution, Carry out the method for thin layer chromatography (Appendix Ⅵ B), using silica gel G mixed with sodium carboxymethyl cellulose as the coating substance and a mixture of benzene, ethyl acetate, methanol, isopropanol and concentrated ammonia (12 : 6 : 3 : 3 : 1) as the mobile phase. Apply separately 2 μl of the reference drug solution and 4 μl of the test solution obtained under Assay to the plate. After developing in a chamber pre-equilibrated with the vapour of concentrated ammonia TS for 15 minutes and removal of the plate, dry in air, examine under ultraviolet light at 365 nm. The fluorescent spots in the chromatogram obtained with the test solution correspond in position and colour to the spots in the chromatogram obtained with the reference drug solution.

(3) To 5 g of the pills, cut into pieces, add 30 ml of methanol, ultrasonicate for 30 minutes, filter, evaporate the filtrate to almost dryness, to the residue add 30 ml of water, adjust pH to 1-2 with dilute hydrochloric acid TS, extract with 25 ml of ethyl acetate, evaporate the ethyl acetate solution to dryness, dissolve the residue in 2 ml of methanol as the test solution. To 1.5 g of Rhizoma Picrorhizae reference drug, add 20 ml of methanol, ultrasonicate for 20 minutes, filter and evaporate the filtrate to dryness, dissolve the residue in 3 ml of methanol as the reference drug solution. Carry out the method for thin layer chromatography (Appendix Ⅵ B), using silica gel G mixed with sodium carboxymethylcellulose as the coating substance and a mixture of petroleum ether (30-60℃), ethyl acetate, and formic acid (5 : 1 : 0.1) as the mobile phase. Apply separately 6 μl of each of the test solution and reference drug solution to the plate. After developing and removal of the plate, dry in air, spray with a mixture of 5% vanillin in sulfuric acid and ethanol (1 : 6), heat at 100 ℃ to spots distinct. The main spots in the chromatogram obtained with the test solution correspond in the position and colour to the spots in the chromatogram obtained with the reference drug solution.

(4) Dissolve a quantity of baicalin CRS in methanol to produce a solution containing 1 mg per ml as the reference solution. Carry out the method for thin layer chromatography (Appendix Ⅵ B), using silica gel G mixed with sodium carboxymethylcellulose containing 1% solution of sodium hydroxide as the coating substance and a mixture of ethyl acetate, butanone, formic acid and water (5 : 3 : 1 : 1) as the mobile phase. Apply separately 3-5 μl of each of reference solution and test solution obtained under Identification (3) to the plate. After developing and removal of the plate, dry in air, spray with 5% ferric chloride in ethanol. The spot in the chromatogram obtained with the test solution corresponds in position and colour to the spot in the chromatogram obtained with the reference solution.

(5) To 1 ml of the test solution obtained under the Identification (3), add 1 ml of methanol, mix well as the test solution. Macerate 0.5 g of Flos Buddlejae reference drug, cut into pieces, with 5 ml of methanol for 20 minutes, ultrasonicate for 10 minutes, use the supernatant as the reference drug solution. Carry out the method for thin layer chromatography (Appendix Ⅵ B), using silica gel G mixed with sodium carboxymethyl cellulose as the coating substance and a mixture of cyclohexane, ethyl acetate and formic acid (20 : 1 : 0.1) as the mobile phase. Apply separately 5 μl of each of the reference drug solution and test solution to the plate. After developing and removal of the plate, dry in air, spray with 10% sulfur acid in ethanol. The main spots in the chromatogram obtained with the test solution correspond in position and colour to the spots in the chromatogram obtained with the reference drug solution.

Other requirements Comply with the general requirements for pills (Appendix Ⅰ A).

Assay Cut the drug obtained under the test of Weight variation into pieces and mix well. Weight accurately 0.5 g of the drug in a stopper conical flask, add accurately 25 ml of the mixture of hydrochloric acid and methanol (1 : 100), weigh and mix well, macerate overnight, ultrasonicate (power, 250 W; frequency, 50 kHz) for 40 minutes, allow to cool, weigh again and replenish the lost weight with the same solvent, mix well, filter, and use the successive filtrate as the test solution. Dissolve a quantity of berberine hydrochloride CRS, weighed accurately, in mixture of hydrochloric acid and methanol (1 : 100) to produce a reference solution containing 20 μg per ml. Carry out the method for thin layer chromatography (Appendix Ⅵ B), using silica gel G as the coating substance and a mixture of benzene, ethyl acetate, methanol, isopropanol and concentrated ammonia TS (12 : 6 : 3 : 3 : 1) as the mobile phase. Apply accurately to the plate 2-4 μl of the test solution, 2 μl and 4 μl of the reference solution alternatively. After developing in a chamber pre-equilibrated with the vapour of concentrated ammonia TS for 15 minutes and removal of the plate, dry in air. Carry out the method for thin layer chromatography (Appendix Ⅵ B, thin layer chromatographic scanning method), scan at the wavelength of λex = 338 nm with fluorescence mode, measure the integration values both of the test solution and the reference solution respectively, calculate the content.

It contains not less than 6.3 mg of berberine hydrochloride ($C_{20}H_{18}ClNO_4$) per pill, referred to Rhizoma Coptidis and Cortex Phellodendri.

Action To clear the liver and purge *fire*, and improve vision.

Indications Swollen, bloodshot eyes with pain, blurred vision, photophobia and lacrimation, or pterygium due to exuberant *fire* in the liver.

Usage and dosage 1 pill, 1-2 times a day.

Strength 9 g per pill

Storage Preserve in tightly closed containers.

Huangshi Xiangsheng Wan (黄氏响声丸)

Huangshi Xiangsheng Pills

Ingredients Herba Menthae; Bulbus Fritillariae Thun-bergii; Fructus Forsythiae; Periostracum Cicadae; Semen Sterculiae Lychnophorae; Radix et Rhizoma Rhei (stir-baked with wine); Rhizoma chuanxiong; Catechu; Radix Platycodon; Fructus Chebulae (cored); Radix et Rhizoma Glycyrrhizae; Mentholum.

Procedure Pulverize Radix et Rhizoma Rhei, Rhizoma chuanxiong, Fructus Chebulae, Bulbus Fritillariae Thunbergii, Herba Menthae and Catechu to coarse powder. Decoct the other five ingredients, except mentholum, with water for 2 times, 1.5 hours for each. Combine the decoction, stand to precipitate, filter and concentrate the filtrate to a quantity of amount. Stir thoroughly with the coarse powder and dry. Pulverize to fine powder, sift (80 mesh), add mentholum and mix thoroughly, make pills, and coat with sugar; or coat with charcoal to make pills of 0.1 g or 0.133 g per pill.

Description Sugar coated concentrated watered pills or charcoal coated concentrated watered pills with brown or dark brown core; taste, bitter, refreshing.

Identification (1) Grind a quantity of the pills, removed the coating substance, to fine powder. To 2 g of the powder, add 20 ml of ethanol, ultrasonicate for 30 minutes and filter. Evaporate the filtrate to dryness, dissolve the residue in 1 ml of chloroform as the test solution. Prepare a solution with 1 g of Radix et Rhizoma Rhei reference drug as the reference drug solution in the same manner. Dissolve a quantity of emodin CRS in methanol to produce a solution containing 1 mg per ml as the reference solution. Carry out the method for thin layer chromatography (Appendix Ⅵ B), using silica gel G as the coating substances and the upper layer of a mixture of petroleum ether (30-60℃), formate acetate and formic acid (15 : 5 : 1) as the mobile phase. Apply separately to the plate 3 μl of the test solution, 5μl of the reference drug solution and 1 μl of the reference solution. After developing and removal of the plate, dry in air. Expose to ammonia vapour to visualize the spots clearly. The spots in the chromatogram obtained with the test solution correspond in position and colour to the spots in the chromatogram obtained with the reference drug solution and reference solution.

(2) Grind a quantity of the pills, removed the coating, to fine powder. To 10 g of the powder, add 60 ml of ether, ultrasonicate for 20 minutes, filter, keep the residue for latter use and evaporate the filtrate to dryness, dissolve the residue in 1 ml of ethyl acetate as the test solution. Prepare a solution of 0.5 g of Rhizoma Chuanxiong reference drug and 30 ml of ether in the same manner as the reference drug solution. Carry out the method for thin layer chromatography (Appendix Ⅵ B), using silica gel G as the coating substance and a mixture of *n*-hexane and ethyl acetate (9 : 1) as the mobile phase. Apply separately 5-10 μl of each of the test solution and reference drug solution to the plate. After developing and removal of the plate, dry in air. Examine under ultraviolet light at 365 nm, the fluorescent spots in the chromatogram obtained with the test solution correspond in position and colour to the spots in the chromatogram obtained with the reference drug solution.

(3) To the drug residue, extracted with ether under Identification (2), evaporate to dryness, add 60 ml of methanol, ultrasonicate for 40 minutes, filter, evaporate the filtrate, and dissolve the residue in 40 ml of water, extract with three 20-ml quantities of *n*-butanol saturated with water, combine the *n*-butanol extract, wash the *n*-butanol extract three 20-ml quatilies of water, evaporate the *n*-butanol extract to dryness, dissolve the residue in 2 ml of methanol as the test solution. To 1 g of Radix et Rhizoma Glycyrrhizae reference drug, add 40 ml of ether, ultrasonicate for 20 minutes, filter and evaporate the filtrate to dryness, produce a solution in the same manner as the reference drug solution. Carry out the method for thin layer chromatography (Appendix Ⅵ B), using silica gel G as the coating substance and a mixture of benzene, chloroform and methanol (10 : 10 : 1) as the mobile phase. Apply separately 10 μl of each of the test solution and reference drug solution to the plate. After developing and removal of the plate, dry in air. Examine under ultraviolet light at 365 nm, the fluorescent spots in the chromatogram obtained with the test solution correspond in position and colour to the spots in the chromatogram obtained with the reference drug solution.

Other requirements Comply with the general requirements for pills (Appendix Ⅰ A).

Assay Weigh accurately 4 g of the pills, removed the coating substances and triturated to fine powder, add a quantity of kieselguhr, and stir thoroughly. Moisten with small amount of concentrated ammonium TS, stopper tightly, stand for 30 minutes, add 50 ml of a mixture of ether, chloroform and ethanol (50 : 16 : 5), ultrasonicate for 30 minutes (power, 50 W; frenquency, 40 kHz), stand overnight. Filter, wash the drug residue for 3 times with the above mixture solvent, combine the filtrate and the washings, and evaporate to dryness. Dissolve the residue in chloroform, transfer to a 2 ml volumetric flask, dilute to volume, mix well and use as the test solution. Dissolve a quantity of peimisine CRS, weighed accurately, in chloroform to produce a solution containing 0.5 mg per ml as the reference solution. Carry out the method for thin layer chromatography (Appendix Ⅵ B), using silica gel G as the coating substances and the upper layer of the mixture of petroleum ether (60-90℃), formate acetate, methanol and concentrated ammonium TS (10 : 10 : 2 : 1) as the mobile phase. Apply accurately to the plate 10 μl of the test solution, 4 μl and 8 μl of the reference solutions. After developing and removal of the plate, dry in air. Spray with dilute potassium iodobismuthate TS, dry, cover with a same size glass to the plate and fix with a adhesive tape. Carry out the method for thin layer chromatography (Appendix Ⅵ B, thin layer chromatographic scanning method), scan at the wavelength: λ_S = 515 nm, λ_R = 650 nm. Measure the integration value of absorbency of the test solution, and the reference solution, and calculate.

It contains not less than 0.10 mg of peimisine ($C_{27}H_{43}NO_3$) per gram, referred to Bulbus Fritillariae Thunbergii.

Action To disperse *wind* and clear *heat*, resolve *phlegm* and dissipate nodulation, and ease the throat to restore normal voice.

Indications Acute and chronic aphonia due to external *wind-heat* and excessive internal *phlegm-heat*, with manifestations of hoarseness, swollen painful and dry throat, burning sensation and phlegm in the throat, or headache due to *cold* or *heat*, or constipation and deep-coloured urine; acute or

chronic laryngitis, vocal nodules and polyps of the vocal cord at the initial stage with above symptoms.

Usage and dosage 8 charcoal-coated pills (0.1 g per pill) or 6 charcoal-coated pills (0.133 g per pill), 20 sugar coated pills; 3 times a day; taken after meals; half dosage for children.

Precaution Be cautious about patients with loose stools due to cold in the stomach.

Strength (1) 0.1 g per pill (2) 0.133 g per pill

Storage Preserver in well closed containers.

Huatuo Zaizao Wan (华佗再造丸)

Huatuo Zaizao Pills

Huatuo Zaizao Pills are concentrated water-honeyed pills, prepared from Rhizoma Chuanxiong, Fructus Evodiae, Borneolum Syntheticum and some other ingredients.

Description Black concentrated water-honeyed pills; odour, aromatic; taste, bitter.

Identification (1) Heat under reflux 8 g, in pieces, with 50 ml of ether for 1 hour, and filter. Evaporate the filtrate to dryness, dissolve the residue in 2 ml of ethyl acetate as the test solution. Dissolve a quantity of (±)-borneol and (±)-isoborneol CRS in ethyl acetate to produce a solution containing 2 mg per ml as the reference solution. Carry out the method for thin layer chromatography (Appendix Ⅵ B), using silica gel G as the coating substance and benzene as the mobile phase. Apply separately to the plate 2-4 μl of each of the two solutions. After developing and removal of the plate, dry in air. Spray with 10% solution of vanillin in sulfuric acid and visualize under a current of hot air. The spots in the chromatogram obtained with the test solution correspond in position and colour to the spots in the chromatogram obtained with the reference solution.
(2) To 0.8 g of Rhizoma Chuanxiong reference drug and 0.2 g of Fructus Evodiae reference drug, add 20 ml of ether respectively, heat under reflux on a water bath for 1 hour and filter. Dissolve the residues in 1 ml of ethyl acetate as the reference drug solutions respectively. Carry out the method for thin layer chromatography (Appendix Ⅵ B), using silica gel G as the coating substance and a mixture of *n*-hexane and ethyl acetate (9 : 1) as the mobile phase. Apply separately to the plate 2-4 μl of the test solution obtained under Identification (1), and 1-2 μl of each of the two reference drug solutions. After developing and removal of the plate, dry in air, and examine under ultraviolet light at 365 nm. The fluorescent spots in the chromatogram obtained with the test solution correspond in position and colour to the spots in the chromatogram obtained with Rhizoma Chuanxiong reference drug solution. Spray with 5% aluminium chloride in ethanol and examine under ultraviolet light at 365 nm. The fluorescent spots in the chromatogram obtained with the test solution correspond in position and colour to the spots in the chromatogram obtained with Fructus Evodiae reference drug solution.

Other requirements Comply with the general requirements for pills (Appendix Ⅰ A)

Action To promote blood circulation, resolve stagnated blood, resolve *phlegm* to dredge meridians, and move *qi* to kill pain.

Indications Convalescence and sequelae of stroke due to blockage of meridians by *phlegm* with manifestations of hemiplegia, muscular contracture and numbness, deviated mouth and eye and dysphasia.

Usage and dosage 4-8 g, 2-3 times a day, 8-16 g in serious case, or follow doctor's advice.

Precaution Contraindicated for pregnant women.

Storage Preserve in tightly closed containers.

Huazheng Huisheng Pian (化癥回生片)

Huazheng Huisheng Tablets

Ingredients Herba Leonuri 112 g; Flos Carthami 14 g; Pericarpium Zanthoxyli (carbonized) 14 g; Hirudo (processed) 14 g; Radix Angelicae Sinensis 28 g; Lignum Sappan 14 g; Rhizoma Sparganii (stir-baked with vinegar) 14 g; Rhizoma Anemones Raddeanae 14 g; Rhizoma Chuanxiong 14 g; Lignum Dalbergiae Odoriferae 14 g; Rhizoma Cyperi (stir-baked with vinegar) 14 g; Radix et Rhizoma Ginseng 42 g; Rhizoma Alpiniae Officinarum 14 g; Rhizoma Curcumae Longae 8.4 g; Myrrha (stir-baked with salt) 14 g; Semen Armeniacae Amarum (stir-baked) 21 g; Radix et Rhizoma Rhei 56 g; Moschus 14 g; Fructus Foeniculi (stir-baked with salt) 21 g; Semen Persicae 21 g; Faeces Trogopterori (stir-baked with vinegar) 14 g; Tabanus 14 g; Colla Carapacis Trionycis 112 g; Flos Caryophylli 21 g; Rhizoma Corydalis (stir-baked with vinegar) 14 g; Radix Paeoniae Alba 28 g; Pollen Typhae (carbonized) 14 g; Olibanum (stir-baked with vinegar) 14 g; Resina Toxicodendri (calcined) 14 g; Fructus Evodiae (stir-baked with the decoction of Radix et Rhizoma Glycyrrhizae) 14 g; Resina Ferulae 14 g; Cortex Cinnamomi 14 g; Folium Artemisiae Argyi (stir-baked) 14 g; Radix Rehmanniae praeparata 28 g; Fructus Perillae 14 g.

Procedure Mix well the above ingredients, except Moschus, Resina Ferulae, Radix Rehmanniae Preparata, Herba Leonuri and Colla Carapacis Trionycis. Pulverize 430 g of the mixture to fine powder, decoct the remaining portion and Herba Leonuri with water twice and filter. Combine the filtrates, add Colla Carapacis Trionycis to dissolve and concentrate to a thick extract. Dissolve Resina Ferulae in water by heat, decoct Radix Rehmanniae Preparata in water, filter respectively, combine the filtrate and concentrate to a thick extract. Combine the two thick extracts, add the above fine powder, stir well, dry and pulverize to fine powder. Make granules with ethanol, dry, add finely powdered Moschus, mix well and compress into 1000 tablets.

Description Brownish-yellow tablets; odour, characteristic of Moschus; taste, slightly bitter.

Identification (1) Microscopical: Fragments of body walls yellowish-brown, with double-ringed alveoli, sometimes showing spinules. Pollen grains yellowish-brown, subrounded, up to 30 μm in diameter, with fine-dotted extine. Pollen grains triangular, up to 16 μm in diameter. Fibre bundles reddish-brown, fibre slender, 8-10 μm in diameter. Fragments of parenchymatous cells containing gelatinized starch granules, pale yellowish-green. Epidermal cells yellowish-brown, polygonal in surface view, with slightly thickened walls. Non-glandular hairs 2 ~ 7-celled, lumina containing brown contents. Starch granules clavate or vase-shaped, about 50 μm long, with faint striations. Stone cells subsquare, with thickened walls, sometimes very thin at one side. Clusters of calcium oxalate fairly large, 80-140 μm in diameter.

Amorphous masses pale yellowish-brown, embedded with small prisms. Pollen grains rounded or ellipsoidal, 64-80 μm in diameter, extine with spinules, and 3 germinal apertures.

(2) To 2 tablets, finely powdered, add 20 ml of methanol, ultrasonicate for 30 minutes, and filter. Evaporate 5 ml of the filtrate to dryness, dissolve the residue in 10 ml of water, add 1 ml of hydrochloric acid, heat on a water bath for 30 minutes, and allow to cool. Extract with two 20-ml quantities of ether, combine the ether extract, evaporate to dryness. Dissolve the residue in 2 ml of chloroform as the test solution. Prepare a solution of 0.1 g of Radix et Rhizoma Rhei reference drug in the same manner as the reference drug solution. Carry out the method for thin layer chromatography (Appendix Ⅵ B), using silica gel G containing sodium carboxymethylcellulose as the coating substance and the upper layer of the mixture of petroleum ether (30-60℃), ethyl formate and formic acid (15 : 5 : 1) as the mobile phase. Apply separately 4 μl of each of the two solutions to the plate. After developing and removal of the plate, dry in air. Examine under ultraviolet light at 365nm. The five orange-yellow fluorescent spots in the chromatogram obtained with the test solution correspond in position and colour to the spots in the chromatogram obtained with the reference drug solution. Exposure to ammonia vapour, the colour of the spots turn red on daylight.

(3) Heat under reflux 20 tablets, in fine powder, with 50 ml of 80% ethanol for 1 hour, filter and evaporate the filtrate to dryness. Dissolve the residue in 5 ml of 1% hydrochloric acid solution and filter. To the filtrate, add dropwise sodium carbonate TS and adjust to pH 8.0, filter and evaporate the filtrate to dryness. Dissolve the residue in 1 ml of ethanol, used as the test solution. Prepare a solution of 1 g of Herba Leonuri reference drug in the same manner as the reference drug solution. Carry out the method for paper chromatography (Appendix Ⅵ A), using the upper layer of *n*-butanol, acetic acid and water (4 : 1 : 1) as the mobile phase. Apply separately to the chromalographic grade filter paper 20 μl of each of the two solutions in strip. After developing and removal of the paper, dry in air, spray with dilute potassium iodobismuthate TS and dry in air. The strips in the chromatogram obtained with the test solution correspond in position and colour to the strips in the chromatogram obtained with the reference drug solution.

Other requirements Comply with the general requirements for tablets (Appendix Ⅰ D).

Action To disintegrate abdominal masses and resolve stagnant blood.

Indications Abdominal masses due to stagnated blood, emaciation from blood disorders in women, postpartum blood stasis, and pain in the lower abdomen, worse when pressed.

Usage and dosage 5-6 tablets, twice a day, to be taken with warm wine before meals.

Precaution Contraindicated for pregnant women.

Storage Preserve in tightly closed containers.

Huazhi Shuan
(化痔栓)

Huazhi Suppositories

Ingredients Bismuthi Subgallate 200 g; Radix Sophorae Flavescentis 370 g; Cortex Phellodendri Chinensi 92.5 g; Flos Daturae 55.5 g; Borneolum Syntheticum 30 g.

Procedure Decoct Radix Sophorae Flavescentis; Cortex Phellodendri Chinensi; Flos Daturae with water twice, 4 hours for the first time and 2 hours for the second time, combine the decoctions and filter. Stand for 12 hours, and separate the supernatant and concentrate to a thick extract with a relative density of 1.12 (60-65℃). Dry and pulverize the extract to fine power. Dissolve 2.6 g ethyl p-hydroxybenzoate with 15.5 g ethanol, heat a quantity of suppositories base to melt, and add Bismuthi Subgallate, the above fine power, Borneolum Syntheticum, 16.8 g of polysorbate 80, the solution of hydroxyl-benzoic acetate in ethanol into base, mix and pour into moulds, make 1000 suppositories.

Description Suppositories with dark brown colour.

Identification (1) Ignite slowly 5 suppositories in a crucible, cut into pieces, to complete carbonized, cool, dissolve by adding nitric acid in drop. The solution should be positive to identification reaction of bismuth salt (Appendix Ⅳ).

(2) To 2 suppositories, cut into pieces, add 25 ml of water, and ultrasonicate for 30 minutes, then leave it in a cool place below 10℃ until the suppository bases solidified, and filter. Transfer 5 ml of the filtrate to a separating funnel, add concentrated ammonia TS to adjust to pH 11, extract with three 20-ml quantities of chloroform, and combine the chloroform extracts. Evaporate the chloroform to dryness, and dissolve the residue in 1 ml of chloroform as the test solution. Dissolve matrine CRS in chloroform to produce a solution containing 0.5 mg per ml as the reference solution. Carry out the method for thin layer chromatography (Appendix Ⅵ B), using silica gel G as the coating substance and a mixture of benzene, acetone, ethyl acetate and concentrated ammonia TS (2 : 3 : 4 : 0.2) as the mobile phase. Apply separately to the plate 4 μl of each of the test solution and the reference solution. After developing and removal of the plate, dry in air, spray with modified potassium iodobismuthate TS. The spot in the chromatogram obtained with test solution corresponds in position and colour to the spot in the chromatogram obtained with the reference solution.

Other requirements Complies with the general requirements for suppositories (Appendix Ⅰ W).

Assay ***Bismuthi Subgallate*** Weigh accurately 3 g of the suppositories, obtained under the test of weight variation and cut into pieces, place to a crucible, ignite slowly to make the residue turn into orange red, then ignite at 500-600℃ for 1 hour, and cool. Dissolve the residue in 3-5 ml of nitric acid solution (1→2), transfer the solution to a 500 ml of conical flask, add water to about 300 ml, and mix well. Add 10 drops of catechol violet IS (prepared freshly before use), the solution should show blue colour (add ammonia TS untill the solution show blue in case it shows purple or purplish-red). Titrate with disodium edetate (0.05 mol/L) VS. untill the solution turns pale yellow. Each ml of disodium edetate (0.05 mol/L) VS is equivalent to 11.65 mg of Bi_2O_3.

It contains not less than 94 mg and not more than 114 mg of Bismuthi Subgallate, calculated as bismuth oxide (Bi_2O_3).

Borneolum Syntheticum Carry out the method for gas chromatography (Appendix Ⅵ E).

Chromatographic system and system suitability Use a capillary column of polyethylene glycol (PEG) -20 M (30 m long, 0.53 mm in internal diameter, 1.0 μm film thickness) as the stationary phase, and maintain the column temperature at 150℃, split injection, split ratio 40 : 1. The number of theoretical plates of the column is not less than 1900, calculated with the reference of the peak of borneol.

Correction factor Dissolve a quantity of methyl salicylate,

accurately weighed, in ethyl acetate to produce a solution containing 5 mg per ml as internal standard solution. Dissolve 10 mg of (±)-borneol CRS, accurately weighed, in a 10 ml volumetric flask, add 2 ml of the internal standard solution, dilute with ethyl acetate to volume, and mix well. Inject accurately 0.5 μl of the solution into column, calculate correction factor.

Procedure Weigh accurately 10 suppositories, cut into pieces, and weigh accurately 1 g in a 25 ml volumetric flask. Add 5 ml of the internal standard solution and a quantity of ethyl acetate, and ultrasonicate for 20 minutes (power, 300 W; frequency, 33 kHz), cool, dilute with ethyl acetate to volume, stir well and filter. Discard the initial filtrate, and use the successive filtrate as the test solution. Inject accurately 0.5 μl of the test solution into the column and calculate the contents.

It contains not less than 12.6 mg of (±)-borneol ($C_{10}H_{18}O$) per suppository, referred to Borneolum Syntheticum.

Action To clear *heat* and *dampness*, and astringe to stop bleeding.

Indication Internal or external or mixed hemorrhoids due to *damp-heat* in the large intestine.

Usage and dosage Insert the suppository 2-2.5 cm into the anus, 1 suppository each time, 1-2 times a day.

Strength 1.7 g per suppository

Storage Preserve in well closed containers, stored below 30℃.

Hufeng Jiu
(胡蜂酒)

Hufeng Wine

Hufeng Wine is a prescription used by the Jingpo Nationality, prepared by extracting *Vespa manifica* Smith with liquor.

Procedure Macerate 100 g of fresh insect body of *Vespa manifica* Smith in 1000 ml of white wine for 15 days, and filter.

Description A brown, clear liquid; odour, characteristic and aromatic; taste, bitter, numb, slightly pungent.

pH value 4.0-5.0 (Appendix Ⅷ G).

Ethanol content Not less than 40 per cent and not more than 50 per cent (Appendix Ⅸ M).

Total solid Measure accurately 25 ml in a tared evaporating dish, evaporate to dryness on a water bath, dry at 100 ℃ for 3 hours. The residue is not less than 2.5 per cent.

Other requirements Complies with the general requirements for medicinal wines (Appendix Ⅰ M).

Action To soothe the liver to promote bile flow, and clear *heat* and remove constipation.

Indications Dull pain in the right upper abdomen, fullness in stomach and abdomen after meals, poor appetite, belching and constipation due to stagnation of *liver-qi* and failure of *damp-heat* to be cleared; chronic cholecystitis with above symptoms.

Usage and dosage 15-25 ml, twice a day.

Precaution Skin itching may occur occasionally, but it will disappear spontaneously the next day.

Storage Preserve in tightly closed containers, stored in a shady and cool place.

Hugan Pian
(护肝片)

Hugan Tablets

Ingredients Radix Bupleuri 313 g; Herba Artemisiae Scopariae 313 g; Radix Isatidis 313 g; Fructus Schisandrae Chinensis seu Fructus Schisandrae Sphenantherae 168 g; Pulvis Fellis Suis 20 g; Semen Phaseoli Radiati 128 g.

Procedure Pulverize Semen Phaseoli Radiati to fine powder. Decoct Radix Bupleuri, Herba Artemisiae Scopariae and Radix Isatidis with water twice, each two hours and filter. Combine the filtrates, allow to stand for 24 hours, concentrate the supernatant in vacuum to an appropriate quantity, dry by spraying to a fine powder, mix with a quantity of powder of Semen Phaseoli Radiati; or concentrate the supernatant in vacuum to a appropriate quantity, mix with a quantity of powder of Semen Phaseoli Radiati, dry in vacuum and pulverize to fine powder. Extract Fructus Schisandrae, in coarse powder, under reflux with 75% ethanol three times (3 hours, 2 hours and 1 hour respectively). Combine the ethanol extracts, allow to stand for 24 hours, recover ethanol from the supernatant and concentrate to a appropriate quantity, mix well with the remained powder of Semen Phaseoli Radiati, dry in vacuum and pulverize to fine powder. Mix well Pulvis Fellis Suis with the above two fine powders and a quantity of excipient, make granules, dry, press into 1000 tablets and coat with sugar or film.

Description Sugar or film coated tablets with brown core; taste, bitter.

Identification (1) Place 2.5 g, removed sugar coats and finely powdered, in a flask, add 50 ml of *n*-hexane, macerate overnight, heat under reflux at 80-85℃ for 2 hours, and filter. Keep the residue for latter use and evaporate the filtrate at a lower temperature to dryness, and dissolve the residue in 2 ml of ethyl acetate as the test solution. Dissolve a quantity of γ-schisandrin CRS in methanol to produce a solution containing 1 mg per ml as the reference solution. Carry out the method for thin layer chromatography (Appendix Ⅵ B), using silica gel GF_{254} as the coating substance and a mixture of toluene and ethyl acetate (9 : 1) as the mobile phase. Apply separately to the plate 2 μl of each of the two solutions to the plate. After developing and removal of the plate, dry in air, examine under ultraviolet light at 254 nm. The fluorescent spot in the chromatogram obtained with the test solution corresponds in position and colour to the spot in the chromatogram obtained with the reference solution.

(2) To 0.5 g of the drug residue, extracted with *n*-hexane under Identification (1), expel the solvent, add 5 ml of 10% solution of sodium hydroxide, hydrolyze by heating at 120℃ for about 4 hours, cool, and adjust pH to 2-3 with hydrochloric acid. Transfer the solution to a centrifuge tube, wash the container with water, combine the washings to the same tube and centrifuge. Extract the supernatant with 20 ml of ethyl acetate. Evaporate the ethyl acetate extract on a water bath to dryness. Dissolve the residue in 5 ml of ethanol as the test solution. Dissolve a quantity of hyodeoxycholic acid CRS in ethanol to produce a solution containing 1 mg per ml as the reference solution. Carry out the method for thin layer chromatography (Appendix Ⅵ B), using silica gel G as the coating substance and the upper layer of a mixture of isooctane, ether, glacial acetic acid, *n*-butanol and water (10 : 5 : 5 : 3 : 1) as the mobile phase.

Apply separately 5 μl of each of the two solutions to the plate. After developing and removal of the plate, dry in air, spray with a 10% sulfuric acid in ethanol and heat at 105℃ to the spots distinct, examine under ultraviolet light at 365 nm. The fluorescent spot in the chromatogram obtained with the test solution corresponds in position and colour to the spot in the chromatogram obtained with the reference solution.

Other requirements Comply with the general requirements for tablets (Appendix Ⅰ D).

Assay Carry out the method for high performance liquid chromatography (Appendix Ⅵ D).

Chromatographic system and system suitability Use octadecylsilane bonded silica gel as the stationary phase and a mixture of methanol and water (63 : 37) as the mobile phase. As detector a spectrophotometer set at 250 nm. The number of theoretical plates of the column is not less than 2000, calculated with the reference to the peak of schisandrin.

Reference solution Weight accurately a quantity of schisandrin CRS, dissolve in methanol to produce a solution containing 0.1 mg per ml as the reference solution.

Test solution Take 10 pills of the drug, removed the coat, weigh accurately and grind to the fine powder, heat under reflux with 25 ml of ethyl acetate for 30 minutes, allow to cool, filter, wash the residue and the container with 30 ml of ethyl acetate in portions, combine the washings and filtrate, evaporate to dryness, dissolve the residue with methanol and transfer to a 10 ml volumetric flask, dilute with methanol to volume, mix well, filter, and use the successive filtrate as the test solution.

Procedure Inject accurately 10 μl of each of the reference solution and the test solution, respectively, into the column, calculate the content.
It contains not less than 2.8 mg of schisandrin ($C_{24}H_{32}O_7$) per table, referred to Fructus Schisandrae.

Action To sooth the liver to regulate *qi* flow, and invigorate the spleen to promote digestion, and lower transaminase.

Indications Chronic hepatitis and cirrhosis at the initial stage.

Usage and dosage 4 tablets, 3 times a day.

Strength 0.36 g per film-coated tablet

Storage Preserve in tightly closed containers.

Huixiang Juhe Wan
(茴香橘核丸)

Huixiang Juhe Pills

Ingredients Fructus Foeniculi (stir-baked with salt) 40 g; Fructus Anisi Stellati 40 g; Semen Citri Reticulatae (stir-baked with salt) 40 g; Semen Litchi 80 g; Fructus Psoraleae (stir-baked with salt) 20 g; Cortex Cinnamomi 16 g; Fructus Toosendan 80 g; Rhizoma Corydalis (processed with vinegar) 40 g; Rhizoma Curcumae (processed with vinegar) 20 g; Radix Aucklandiae 20 g; Rhizoma Cyperi (processed with vinegar) 40 g; Pericarpium Citri Reticulatae Viride (processed with vinegar) 40 g; Thallus Eckloniae seu Laminariae 40 g; Semen Arecae 40 g; Olibanum (processed) 20 g; Semen Persicae 16 g; Squama Manis (processed) 20 g.

Procedure Pulverize the above seventeen ingredients to fine powder, sift, mix well, make pills with water and dry.

Description Yellowish-brown to brown watered pills; odour, aromatic; taste, slightly sour, pungent and bitter.

Identification (1) Microscopical: Prisms of calcium oxalate abundant in parenchyma. Stone cells of testa subpolygonal, with sinuous and heavily thickened walls, and branched lumina, with brownish-black contents. Sclerenchymatous cells of seed coat fibre-like, lignified, with different thickness walls, with crisscross or oblique pits. Fibre bundles redish-brown or yellowish-brown, with very thick walls. Sclerenchyma fragments greenish-yellow, cells subpolygonal or slightly elongated, walls slightly sinuous, some beaded, pits fine. Testa cells yellowish-brown, subpolygonal in surface view, with relatively thickened walls. Fragments of endosperm colourless, walls relatively thickened with many large subrounded pits. Alga fragments olivo-brown. Squama fragments colourless, with rounded pores varying in size.
(2) Pulverize 18 g of the pills, add 25 ml of ethanol, shake thoroughly, stand overnight, filter. Transfer 3 ml of the filtrate to a stoppere test tube, add 1 ml of 5% solution of sulfuric acid, mix well, hang a strip of trinitrophenol TP, stopper tightly. Warm the test tube on a water bath for 10 minutes, the test paper turns brownish-red.
(3) Pulverize 18 g of the pills, add 25 ml of ether, shake thoroughly, allow to stand overnight, filter. Concentrate the filtrate to 5 ml, and use as the test solution. To 0.5 g of Radix Aucklandiae reference drug add 10 ml of ether, shake thoroughly, allow to stand overnight, filter, use the filtrate as the reference drug solution. Carry out the method for thin layer chromatography (Appendix Ⅵ B), using silica gel G as the coating substance and a mixture of cyclohexane and acetone (10 : 3) as the mobile phase. Apply separately 5 μl of each of the two solutions to the plate. After developing and removal of the plate, dry in air, spray with 1% vanillin in sulfuric acid, and heat at 120 ℃ for 5 minutes. The blue spots in the chromatogram obtained with the test solution correspond in position and colour to the spots in the chromatogram obtained with the reference drug solution.
(4) Grind 10 g of the pills to fine powder, add 40 ml of ether, ultrasonicate for 15 minutes, filter, evaporate the filtrate to dryness, dissolve the residue in 1 ml of methanol as the test solution. Dissolve a quantity of 4-methoxybenzaldehyde CRS in dehydrated ethanol to produce a solution containing 10 μg per ml as the reference solution. Carry out the method for thin layer chromatography (Appendix Ⅵ B), using silica gel G as the coating substance, and a mixture of petroleum ether (60-90℃) and ethyl acetate (17 : 3) as the mobile phase. Apply separately 5 μl of each of the above two solutions to the plate, after developing and removal of the plate, dry in air, spray with dinitrophenylhydrazine TS, the spot in the chromatogram obtained with the test solution correspond to the spot obtained with the reference solution.

Other requirements Comply with the general requirements for pills (Appendix Ⅰ A).

Assay Carry out the method for high performance liquid chromatography (Appendix Ⅵ D).

Chromatographic system and system suitability Use octadecysialne bonded silica gel as the stationary phase and a mixture of methanol and 0.02 mol/L solution of potassium dihydrogen phosphate (40 : 60) as the mobile phase. As detector a spectrophotometer set at 247 nm. The number of theoretical plates of the column is not less than 10000, calculated with the reference to the peak of psoralen.

Reference solution Weigh accurately a quantity of psoralen CRS and isopsoralen CRS and dissolve in methanol to produce a mixture containing 5 μg of each per ml as the

reference solution.

Test solution Grind a quantity of the pills to fine powder, weigh accurately 2 g of the powder in a stopper conical flask, add accurately 50 ml of the methanol, stopper tightly and weigh, ultrasonicate (power, 260 W; frequency, 40 kHz) for 50 minutes, allow to cool, weigh again and replenish the loss weight with the same solvents, mix well and filter, use the successive filtrate as the test solution.

Procedure Inject accurately 10 μl of each of the test solution and reference solution into the column, calculate the content.

It contains not less than 0.29 mg of the total amount of psoralen ($C_{11}H_6O_3$) and isopsoralen ($C_{11}H_6O_3$) per gram, referred to Fructus Psoraleae.

Action To disperse *cold* and move *qi*, and reduce swelling and kill pain.

Indications Hernia caused by *cold* retention and *qi* stagnation, with manifestations of straining of swollen and painful testes.

Usage and dosage 6-9 g, twice a day.

Strength 6 g per 100 pills

Storage Preserve in well closed containers, protected from moisture.

Huodan Wan
(藿胆丸)

Huodan Pills

Ingredients Folium Pogostemonis 4000 g; Pulvis Fellis Suis 315 g.

Procedure Pulverize Folium Pogostemonis to fine powder, sift. Extract Pulvis Fellis Suis with ethanol under reflux, filter, recover ethanol, dry in vacuum and pulverize to fine powder. Mix the above powders well, make pills with water and dry.

Description Black watered pills; odour, characteristic; taste, bitter.

Identification (1) Pulverize 4 g of the pills to coarse powder to a stoppere conical flask, add 20 ml of ether, shake and allow to stand overnight. Filter, expel ether of the filtrate and dissolve the residue in 1 ml of ethyl acetate as the test solution. Dissolve a quantity of patchouli alcohol CRS in ethyl acetate to produce a solution containing 1 mg per ml as the reference solution. Carry out the method for chromatography (Appendix Ⅵ B), using silica gel G as the coating substance and a mixture of petroleum ether (30-60℃), ethyl acetate and glacial acetic acid (95 : 5 : 0.2) as the mobile phase. Apply separately 1-2 μl of each of the two solutions to the plate. After developing and removal of the plate, dry in air, spray with 5% ferric chloride in ethanol, heat to the spots distinct, the spot in the chromatogram obtained with the test solution corresponds in position and colour to the spot in the chromatogram obtained with the reference solution.

(2) Place 1 g of the pills, pulverized to fine powder, in a conical flask, add 20 ml of 40% solution of sodium hydroxide, shake thoroughly, heat in an autoclave at 120℃ for 5 hours. Allow to cool, filter, wash the residue with two 30-ml quantities of water, combine the washings and the filtrate, adjust to pH 1 with hydrochloric acid. Extract with three 30-ml quantities of chloroform, and combine chloroform extracts. Dehydrate with anhydrous sodium sulfate, evaporate to dryness, add 5 ml of dehydrated ethanol to dissolve the residue and use as the test solution. Dissolve a quantity of hyodeoxycholic acid CRS and chenodeoxycholic acid CRS in dehydrated ethanol to produce a mixture containing 1 mg of each per ml as the reference solution. Carry out the method for thin layer chromatography (Appendix Ⅵ B), using silica gel G as the coating substance and the upper layer of a mixture of *n*-hexane, ethyl acetate, acetic acid and methanol (20 : 25 : 2 : 3) as the mobile phase. Apply separately 2 μl of each of the two solutions to the plate. After developing and removal of the plate, dry in air, spray with 10% sulfuric acid in ethanol, heat at 105℃ to spots clear, examine in daylight. The spots in the chromatogram obtained with the test solution correspond in position and colour to the spots in the chromatogram obtained with the reference solution. Examine unde ultraviolet light at 365 nm, the fluorescent spots in the chromatogram obtained with the test solution correspond in position and colour to the spots obtained with the reference solution.

Other requirements Comply with the general requirements for pills (Appendix Ⅰ A).

Assay Grind a quantity of the pills to fine powder. To 1 g of the powder, weighted accurately, in a conical flask, add 20 ml of 40% solution of sodium hydroxide and mix well. Saponify the solution in an autoclave at 120℃ for 5 hours, allow to cool and filter. Wash the residue with three 20-ml quantities of water, centrifuge to get the supernatant. Combine the three supernatants, adjust with hydrochloric acid to about pH 1, extract with two 40-ml and two 30-ml quantities of chloroform. Combine the chloroform extracts, dehydrate with anhydrous sodium sulfate and filter. Wash the anhydrous sodium sulfate and the filtrate with 30 ml of chloroform in portions, combine the washings and the filtrate and recover chloroform to dryness. Dissolve the residue in dehydrated ethanol, transfer to a 25 ml volumetric flask, wash the container with a quantity of dehydrated ethanol, combine the washings into the volumetric flask, add dehydrated ethanol to volume and mix well, used as the test solution. Dissolve separately a quantity of hyodeoxycholic acid CRS and chenodeoxycholic acid CRS in dehydrated ethanol, respectively, to produce two solutions each containing 0.2 mg per ml as the reference solutions. Carry out the method for thin layer chromatography (Appendix Ⅵ B), using silica gel G as the coating substance, and the upper layer of the mixture of *n*-hexane, ethyl acetate, acetic acid and methanol (20 : 25 : 2 : 3) as the mobile phase. Apply accurately 2 μl of the test solution, 1 μl and 4 μl of each of the reference solution to the plate. After developing and removal of the plate, dry in air. Spray with a 5% sulfuric acid in ethanol, heat at 100℃ to the spots distinct. Cover the plate with a same size glass, and fix with tape. Carry out the method for thin layer chromatography (Appendix Ⅵ B, thin layer chromatographic scanning method), scan at an excitation wavelength of 366 nm. Determine the integral values of fluorescent absorbance of the test solution and reference solutions, and calculated the content.

It contains no less than 10.0 mg of the total amount of hyodeoxycholic acid ($C_{29}H_{40}O_4$) and chenodeoxycholic acid ($C_{24}H_{40}O_4$) per gram, referred to Pulvis Fellis Suis.

Action To resolve *dampness* with aromatics, and clear *heat* and free orifices.

Indications Stuffy nose, thin or turbid nasal discharge and forehead pain due to internal retention of *dampness* and *fire* in the *Gallbladder Meridian*.

Usage and dosage 3-6 g, twice a day.

Storage Preserve in tightly closed containers.

Huoxiang Zhengqi Koufuye (藿香正气口服液)

Huoxiang Zhengqi Oral Liquid

Ingredients Rhizoma Atractylodis 80 g; Pericarpium Citri Reticulatae 80 g; Cortex Magnoliae Officinalis (Processed with ginger) 80 g; Radix Angelicae Dahuricae 120 g; Poria 120 g; Pericarpium Arecae 120 g; Rhizoma Pinelliae 80 g; Extractum Glycyrrhizae 10 g; Oleum Pogostemonis 0.8 ml; Oleum Folii Perillae 0.4 ml.

Procedure Heat Cortex Magnoliae with 60% ethanol under reflux for 1 hour, keep the ethanol extract for latter use. Distill Rhizoma Atractylodis, Pericarpium Citri Reticulatae and Radix Angelicae Dahuricae with water, collect the distillations for latter use; filter the aqueous solution after distillation. Decoct Pericarpium Arecae with water twice and filter. Heat Poria with water to boiling, macerate twice at 80℃ and filter. Macerate Rhizoma Pinelliae in water until thoroughly moisturized, add 6.8 g of Rhizoma Zingiberis, decoct twice and filter. Combine the above filtrates, concentrate to a extract with a relative density of 1.10-1.20 (50℃), add Extractum Glycyrrhizae, stir well, precipitate with a two times volume of ethanol and filter. Combine the filtrate with the ethanol extract of Cortex Magnoliae, recover ethanol, add Oleum Pogostemonis and Oleum Folii Perillae and the distillations, and mix well. Add water to a volume of 1025 ml, adjust the solution with sodium hydroxide to pH 5.8-6.2, allow to stand, filter, pack and sterilize.

Description A brown clear liquid; taste, pungent and slightly sweet.

Identification (1) Measure 20 ml of the liquid, extract with two 25-ml quantities of petroleum ether (30-60℃), combine the extracts, evaporate to dryness at a lower temperature, dissolve the residue in 1 ml of ethyl acetate as the test solution. Dissolve a quantity of patchouli alcohol CRS in ethyl acetate to produce a solution containing 1 mg per ml as the reference solution. Dissolve separately a quantity of magnolol CRS and honokiol CRS in methanol to produce two solutions each containing 1 mg per ml as the reference solutions. Carry out the method for thin layer chromatography (Appendix Ⅵ B), using silica gel G containing sodium carboxymethyl cellulose as the coating substance and a mixture of petroleum ether (60-90℃), ethyl acetate and formic acid (85 : 15 : 2) as the mobile phase. Apply separately 10 μl of the test solution and 5 μl of each of the reference solutions to the plate. After developing and removal of the plate, dry in air, spray with 5% vanillin in sulfuric acid, heat at 100℃ to the spots distinct. The violet-red spot in the chromatogram obtained with the test solution corresponds in position and colour to the spot in the chromatogram obtained with the patchouli alcohol reference solution. The spots in the chromatogram obtained with the test solution correspond in position and colour to the spots in the chromatogram obtained with the magnolol and honokiol reference solutions.

(2) Extract 20 ml of the liquid with 20 ml of ether by shaking, evaporate the ether extract to about 2 ml and use as the test solution. Dissolve a quantity of imperatorin CRS in ether to produce a solution containing 1 mg per ml as the reference solution. Carry out the method for thin layer chromatography (Appendix Ⅵ B), using silica gel G mixed with sodium carboxymethylcellusose as the coating substance and a mixture of cyclohexane and ethyl acetate (4 : 1) as the mobile phase. Apply separately 10 μl of each of the test solution and reference solution to the plate. After developing and removal of the plate, dry in air. Examine under ultraviolet light at 365 nm, the fluorescent spot in the chromatogram obtained with the test solution corresponds in position and colour to the spot in the chromatogram obtained with the reference solution.

(3) To 1 g of Rhizoma Atractylodis reference drug, add 10 ml of methanol, ultrasonicate for 30 minutes, filter and evaporate the filtrate to dryness, dissolve the residue in 1 ml of methanol as the reference drug solution. Carry out the method for thin layer chromatography (Appendix Ⅵ B), using silica gel G mixed with sodium carboxymethylcellusose as the coating substance and a mixture of petroleum ether (60-90℃) and ethyl acetate (19 : 1) as the mobile phase. Apply separately 10 μl of each of the test solution obtained under Identification (2) and the reference drug solution to the plate. After developing and removal of the plate, dry in air. Spray with 5% solution of *p*-dimethylaminobenzaldehyde in 10% sulfuric acid in ethanol, heat to spots distinct. A dark green spot in the chromatogram obtained with the test solution corresponds in position and colour to the spot in the chromatogram obtained with the reference drug solution.

Relative density Not less than 1.01 (Appendix Ⅶ A).

pH value 4.5-6.5 (Appendix Ⅶ G).

Other requirements Comply with the general requirements for mixtures (Appendix Ⅰ J).

Assay Carry out the method for High performance liquid chromatography (Appendix Ⅵ D).

Chromatographic system and system suitability Use octadecylsilane bonded silica gel as the stationary phase and a mixture of methanol, isopropanol and water (36 : 21 : 36) as the mobile phase. As detector a spectrophotometer set at 294 nm. The number of theoretical plates of the column is not less than 5000, calculated with the reference to the peak of magnolol.

Reference solution Weight accurately a quantities of magnolol CRS and honokiol CRS, dissolve in methanol, separately, to produce solutions containing 0.1 mg of magnolol per ml and 0.05 mg of honokiol per ml as the reference solutions.

Test solution Measuring accurately 5 ml of the liquid, add 2 drops of hydrochloric acid, extract with three 10-ml quantities of chloroform, combine the chloroform extract and evaporate to dryness, dissolve the residue in a quantity of methanol, transfer the methanol solution to a 10 ml volumetric flask, dilute with methanol to the volume, mix well, filter and use the successive filtrate as the test solution.

Procedure Inject accurately 10 μl of each of the reference solutions and the test solution, respectively, into the column, calculate the content.

It contains not less than 0.30 mg of total amount of magnolol ($C_{18}H_{18}O_2$) and honokiol ($C_{18}H_{18}O_2$) per ml, referred to Cortex Magnoliae Officinalis.

Action To release the exterior and remove *dampness*, and regulate the flow of *qi* to harmonize the *middle-energizer*.

Indications Common cold due to affliction from external wind-cold and internal retention of dampness or *summer-heat* and *dampness*, with manifestations of headache with heavy sensation, constriction in the chest, distending pain in the stomach and abdomen, vomiting and diarrhea; gastrointestinal cold with above symptoms.

Usage and dosage 5-10 ml, twice a day, shaking before use.

Strength 10 ml per vial

Storage Preserve in tightly closed containers.

Huoxiang Zhengqi Ruanjiaonang (藿香正气软胶囊)

Huoxiang Zhengqi Soft Capsules

Ingredients Rhizoma Atractylodis 195 g; Pericarpium Citri Reticulatae 195 g; Cortex Magnoliae Offcinalis (processed with ginger) 195 g; Radix Angelicae Dahuricae 293 g; Poria 293 g; Pericarpium Arecae 293 g; Rhizoma Pinelliae 195 g; Extractum Glycyrrhizae 24.4 g; Oleum Pogostemonis 1.95 ml; Oleum Folii Perillae 0.98 ml.

Procedure Extract Rhizoma Atractylodis, Pericarpium Citri Reticulatae Cortex Magnoliae Officinalis and Radix Angelicae Dahuricae with ethanol twice, combine the extracts, concentrate to a thin extract; decoct Poria and Pericarpium Arecae with water twice, combine the decoctions, filter; macerate Rhizoma Pinelliae with cold water, change water every 8 hours until softened thoroughly, add 16.5 g of Rhizoma zingiberis, decoct with water twice, filter. Combine the above filtrates, concentrate to a quantity, precipitate with a quantity of ethanol, concentrate the supernatant to a thin extract. Pulverize and dissolve Extractum Glycyrrhizae with water on boiling, precipitate with a quantity of ethanol, concentrate the supernatant to a thin extract. Combine the above thin extracts, add Oleum Pogostemonis, Oleum Folii Perillae and a quantity of excipient, mix well, make 1000 soft capsules.

Description Soft capsules containing brown extract; odour, fragrant; taste, pungent and bitter.

Identification (1) Cut 4 capsules, get the content, add 1 g of kieselguhr, and grind well. Add 20 ml of *n*-hexane, ultrasonicate for 15 minutes, filter, evaporate to dryness at a low temperature. Dissolve the residue in 2 ml of *n*-hexane as the test solution. To 0.5 g of Rhizoma Atractylodis reference drug, add 2 ml of *n*-hexane, ultrasonicate for 15 minutes, filter, use the filtrate as the reference drug solution. Carry out the method for thin layer chromatography (Appendix Ⅵ B), using silica gel G as the coating substance and a mixture of petroleum ether (60-90℃) and ethyl acetate (20 : 1) as the mobile phase. Apply separately 5 μl of each of the test solution and the reference drug solution to the plate. After developing and removal of the plate, dry in air, spray with 5% solution of p-dimethylaminobenzaldehyde in 10% sulfuric acid in ethanol, heat to the spots clear. The spots in the chromatogram obtained with the test solution correspond in position and colour to the spots in chromatogram obtained with the reference drug solution.

(2) To the content of 7 capsules, add 2 g of kieselguhr, and grind well. Add 20 ml of water, ultrasonicate for 30 minutes, filter. Extract the filtrate with two 20-ml quantities of ethyl acetate by shaking, combine the ethyl acetate extracts, evaporate to dryness. Dissolve the residue in 2 ml of methanol as the test solution. Dissolve a quantity of hesperidin CRS in methanol to prepare a saturated solution as the reference solution. Carry out the method for thin layer chromatography (Appendix Ⅵ B), using silica gel G as the coating substance and a mixture of ethyl acetate, methanol and water (100 : 17 : 10) as the mobile phase. Apply separately 5 μl of each of the test solution and the reference solution to the plate. After developing and removal of the plate, dry in air, spray with 5% aluminum chloride in ethanol, heat for a few minutes. Examine under ultraviolet light at 365 nm, the fluorescent spot in the chromatogram obtained with the test solution corresponds in position and colour to the fluorescent spot in chromatogram obtained with the reference solution.

(3) Dissolve the content of 2 capsules in 10 ml of chloroform, filter, use the filtrate as the test solution. Dissolve 80 μl of cablin patch oil reference extract in 100 ml of chloroform as the reference extract solution. Carry out the method for thin layer chromatography (Appendix Ⅵ B), using high performance silica gel G as the coating substance and a mixture of *n*-hexane and ethyl acetate (17 : 3) as the mobile phase. Apply separately 2 μl of each of the test solution and the reference solution to the plate. After developing and removal of the plate, dry in air, spray with 5% vanillin in sulfuric acid, heat at 105℃ to spots distinct. The spots in the chromatogram obtained with the test solution correspond in position and colour to the spots in chromatogram obtained with the reference extract solution.

(4) Macerate 2 g of Radix Angelicae Dahuricae reference drug with 10 ml of 60% ethanol overnight, filter, use the filtrate as the test solution. Carry out the method for thin layer chromatography (Appendix Ⅵ B), using high performance silica gel G as the coating substance and a mixture of chloroform and methanol (9 : 1) as the mobile phase. Apply separately 2 μl of each of the test solution obtained under Identification (3) and the reference drug solution to the plate. After developing and removal of the plate, dry in air. Examine under ultraviolet light at 254 nm, the fluorescent spots in the chromatogram obtained with the test solution correspond in position and colour to the fluorescent spots in chromatogram obtained with the reference drug solution.

Weight variation To 10 capsules, carry out the method for weight variation of capsules (Appendix Ⅰ L). The weight variation limit should be within ±10%. Not more than two of the individual weights deviate outside the weight variation limit and none deviate outside 1 fold of the limit.

Determination of Disintegration Carry out the method for determination of disintegration (Appendix Ⅺ A), all the capsules should disintegrate completely and pass through the gauze within 1.5 hours except the fragments of the capsule shell.

Other requirements Comply with the general requirements for capsules (Appendix Ⅰ L).

Assay Carry out the method for high performance liquid chromatography (Appendix Ⅵ D).

Chromatographic system and system suitability Use octadecylsilane bonded silica gel as the stationary phase and a mixture of methanol and water (75 : 25) as the mobile phase. As detector a spectrophotometer set at 294 nm. The number of theoretical plates of the column is not less than 5600, calculated with the reference to the peak of magnolol.

Reference solution Dissolve a quantity of magnolol CRS and honokiol CRS, accurately weighed, in methanol to prepare a mixture containing 0.1 mg of magnolol per ml and 0.08 mg of honokiol per ml as the reference solution.

Test solution Weigh accurately 0.25 g of the content of the capsules, obtained under the test of Weight variation, mix well, to a stopper conical flask, add accurately 50 ml of 50% ethanol, stopper tightly and weigh. Ultrasonicate (power, 250 W; frequency, 33 kHz) for 10 minutes, allow to stand to room temperature and weigh again, replenish the lost weight with dilute ethanol TS, shake thoroughly and filter, use the successive filtrate as the test solution.

Procedure Inject accurately 6 μl of the reference solution and 10-20 μl of the test solution, respectively, into the column, and calculate the content.

It contains not less than 2.25 mg of total amount of magnolol ($C_{18}H_{18}O_2$) and honokiol ($C_{18}H_{18}O_2$) per capsule, referred to Cortex Magnoliae Officinalis.

Action To release the exterior and resolve dampness, and regulate the flow of *qi* to harmonize the *middle-energizer*.

Indications Cold due to affliction from external *Wind-cold* and internal retention of *dampness* or *summer-heat* and *dampness*, with manifestations of headache with heavy sensation, constriction in the chest, distending pain in the *stomach* and abdomen, vomiting and diarrhea; gastrointestinal cold with above symptome.

Usage and dosage 2-4 capsules, twice a day.

Strength 0.45 g per capsule

Storage Preserve in tightly closed containers.

Huoxiang Zhengqi Shui (藿香正气水)

Huoxiang Zhengqi Tincture

Ingredients Rhizoma Atractylodis 160 g; Pericarpium Citri Reticulatae 160 g; Cortex Magnoliae Officinalis (processed with ginger) 160 g; Radix Angelicae Dahuricae 240 g; Poria 240 g; Pericarpium Arecae 240 g; Rhizoma Pinelliae 160 g; Extractum Glycyrrhizae 20 g; Oleum Pogostemonis 1.6 ml; Oleum Folii Perillae 0.8 ml.

Procedure Carry out the method for percolation as described under liquid extracts and extracts (Appendix Ⅰ O), macerate separately Rhizoma Atractylodis, Pericarpium Citri Reticulatae, Cortex Magnoliae Officinalis and Radix Angelicae Dahuricae for 24 hours, using 60% ethanol as solvent. Percolate, collect 400 ml of the initial percolate of the former three drugs and 500 ml of the later for latter use. Collect the successive percolate, concentrate, and combine with the initial percolate respectively. Boil Poria with water, macerate at 80℃ for two times, 3 hours and 2 hours respectively and combine the decoctions; macerate Rhizoma Pinelliae with cold water, change water every 8 hours until softened thoroughly, add 13.5 g of dried ginger, decoct with water for two times, 3 hours and 2 hours respectively; decoct Pericarpium Arecae with water for 3 hours, pulverize and dissolve Extractum Glycyrrhizae with water on boiling; combine the above decoctions, filter, concentrate the filtrate properly. Dissolve Oleum Pogostemonis and Oleum Folii Perillae in a quantity of ethanol. Combine the above solutions, mix well; adjust the ethanol content with ethanol and water, make up the total volume to 2050 ml, allow to stand, filter, and pack.

Description A dark brown transparent liquid (slightly turbid on long storage); taste, pungent and bitter.

Identification (1) Extract 20 ml of the liquid with two 25-ml quantities of cyclohexane by shaking, combine the cyclohexane extract and evaporate to dryness at a low temperature, dissolve the residue in 1 ml of cyclohexane as the test solution. To 0.5 g of Rhizoma Atractylodis reference drug, add 2 ml of cyclohexane, ultrasonicate for 15 minutes, filter and use the filtrate as the reference drug solution. Carry out the method for thin layer chromatography (Appendix Ⅵ B), using silica gel G as the coating substance and a mixture of petroleum ether (60-90℃) and ethyl acetate (20 : 1) as the mobile phase. Apply separately 15 μl of the test solution and 5 μl of reference solution to the plate. After developing and removal of the plate, dry in air. Spray with 5% solution of *p*-dimethylaminobenzaldehyde in 10% sulfuric acid in ethanol, heat to spots distinct. The spots in the chromatogram obtained with the test solution correspond in position and colour to the spots in the chromatogram obtained with the reference drug solution.

(2) Extract 20 ml of the liquid with two 25-ml quantities of petroleum ether (30-60℃) by shaking, extract the water solution with three 20-ml of quantities of ethyl acetate and keep the petroleum ether layer for latter use, combine the ethyl acetate extract, evaporate to dryness and dissolve the residue in 2 ml of methanol as the test solution. Dissolve a quantity of hesperidin CRS in methanol to produce a saturated solution as the reference solution. Carry out the method for thin layer chromatography (Appendix Ⅵ B), using silica gel G as the coating substance and the lower layer of the mixture of chloroform, methanol and water (32 : 17 : 5) as the mobile phase. Apply separately 5 μl of each of the above two solutions to the plate. After developing and removal of the plate, dry in air. Spray with 5% aluminum chloride in ethanol, examine under ultraviolet light at 365 nm, the fluorescent spot in the chromatogram obtained with the test solution corresponds in position and colour to the spot in the chromatogram obtained with the reference solution.

(3) Evaporate the petroleum ether extract obtained under Identification (2) to dryness at a low temperature, dissolve the residue in 1 ml of ethyl acetate as the test solution. Dissolve a quantity of patchoulialcohol CRS in ethyl acetate to produce a solution containing 1 mg per ml as the reference solution. Dissolve a quantity of magnolol CRS and honokiol CRS in methanol, separately, to produce two solutions each containing 1 mg per ml as the reference solutions. Carry out the method for thin layer chromatography (Appendix Ⅵ B), using silica gel G mixed with sodium carboxymethylcellusose as the coating substance and a mixture of petroleum ether (60-90℃), ethyl acetate and formic acid (85 : 15 : 2) as the mobile phase. Apply separately 10 μl of the test solution and 5 μl of each of the reference solutions to the plate. After developing and removal of the plate, dry in air. Spray with 5% vanillin in sulfuric acid, heat at 100℃ to spots distinct. The red spot in the chromatogram obtained with the test solution corresponds in position and colour to the spot obtained with the reference solution of patchoulialcohol, and the spots in the chromatogram obtained with the test solution correspond in position and colour to the spots obtained with the reference solution of magnolol and honokiol.

(4) Dissolve a quantity of imperatorin CRS in ethyl acetate to produce a solution containing 1 mg per ml as the reference solution. Carry out the method for thin layer chromatography (Appendix Ⅵ B), using silica gel G as the coating substance and a mixture of petroleum ether (60-90℃) and ether (3 : 2) as the mobile phase. Apply separately 4 μl of the test solution obtained under Identification (3) and the above reference solution to the plate. After developing at a temperature below 25℃ and removal of the plate. Examine under the ultraviolet light at 365 nm, the fluorescent spot in the chromatogram obtained with the test soluton corresponds in position and colour to the spot obtained with the reference solution.

Ethanol content 40 per cent-50 per cent (Appendix Ⅸ M).

Packing variation Take 5 vials, pour the content into calibrated dry measuring cylinders separately and examine at room temperature. No more than 1 vial is less than the labeled volume, and no vial is less than 95% of the labeled volume.

Other requirements Complies with the general requirements for tinctures (Appendix Ⅰ N).

Assay Carry out the method for high performance liquid chromatography (Appendix Ⅵ D).

Chromatographic system and system suitability Use Octadecylsilane bonded silica gel as the stationary phase and a

mixture of methanol, acetonitrile and water (50 : 20 : 40) as the mobile phase. As detector a spectrophotometer set at 294 nm. The number of theoretical plates of the column is not less than 5000, calculated with the reference of the peak of magnolol.

Reference solution Weigh accurately a quantity of magnolol CRS and honokiol CRS, dissolve in methanol, respectively, to produce two reference solutions, containing 0.2 mg of magnolol per ml and 0.1 mg of honokiol per ml, respectively.

Test solution To 5 ml of the solution, exactly measured, add 2 drops of hydrochloric acid, extract with three 10-ml quantities of chloroform. Combine the chloroform solutions, evaporate to dryness, dissolve the residue in methanol and dilute to 10 ml. Transfer exactly 5 ml to a 10 ml volumetric flask, add methanol to volume, mix well, filter and use successive filtrate as the test solution.

Procedure Exactly inject 10 μl of each of the three solutions, respectively, into the column, determine and calculate the content.
It contains no less than 0.58 mg of the total amount of magnolol ($C_{18}H_{18}O_2$) and honokiol ($C_{18}H_{18}O_2$) per ml, referred to Cortex Magnoliae.

Action To release the exterior and resolve *dampness*, and regulate the flow of *qi* to harmonize the *middle-energizer*.

Indications Cold due to affliction from external *wind-cold* and internal retention of *dampness* or *summer-heat* and *dampness*, with manifestations of headache with heavy sensation, constriction in the chest, distending pain in the stomach and abdomen, vomiting and diarrhea; gastrointestinal cold with above symptoms.

Usage and dosage 5-10 ml, twice a day, shaking before use.

Strength 10 ml per vial

Storage Preserve in tightly closed containers.

Huoxue Zhitong San
(活血止痛散)

Huoxue Zhitong Powder

Ingredients Radix Angelicae Sinensis 400 g; Radix et Rhizoma Notoginseng 80 g; Olibanum (processed) 80 g; Borneolum Syntheticum 20 g; Eupolyphaga seu Steleophaga 200 g; Pyritum (calcined) 120 g.

Procedure Pulverize the above ingredients, except Borneolum Syntheticum, to fine powder, mix well with the fine powder of Borneolum Syntheticum and sift.

Description A greyish-brown powder; odour, aromatic; taste, pungent, bitter, and cool.

Identification (1) Microscopical: Parenchymatous cells fusiform, walls slightly thickened, with very fine and oblique crisscross striations. Fragments of resin ducts containing yellow secretions. Fragments of body wall yellow or brownish-red, with round hair-cavities, 8-24 μm in diameter, with hard hairs of varying length.
(2) To 0.1 g of the powder add 1 ml of dilute hydrochloric acid TS, boil for several minutes and filter; the filtrate yields the characteristic reactions of iron salts (Appendix Ⅳ).
(3) To 1 g of the powder, add 15 ml of petroleum ether (30-60℃), ultrasonicate for 2-3 minutes, filter and evaporate the filtrate to 1 ml, used as the test solution. Dissolve a quantity of (±)-borneol and (±)-isoborneol CRS in petroleum ether (30-60℃) to prepare a solution containing 2 mg per ml as the reference solution. Carry out the method for thin layer chromatography (Appendix Ⅵ B), using silica gel G as the coating substance, and a mixture of petroleum ether (30-60℃) and ethyl acetate (19 : 2) as the mobile phase. Apply separately 2 μl of each of the two solutions to the plate. After developing and removal of the plate, dry in air, spray with 5% vanillin in sulfuric acid, heat at 105℃ to the spots distinct. The spots in the chromatogram obtained with the test solution correspond in position and colour to the spots in the chromatogram obtained with the reference solution.
(4) To 6 g of the powder, add 40 ml of ether, ultrasonicate for 10 minutes, filter, keep the drug residue for latter use and evaporate the filtrate to dryness, dissolve the residue in 2 ml of ethanol as the test solution. Prepare a solution of 1 g of Radix Angelicae Sinensis reference drug and 20 ml of ether in the same manner as the reference drug solution. Carry out the method for thin layer chromatography (Appendix Ⅵ B), using silica gel G as the coating substance, and a mixture of *n*-hexane and ethyl acetate (9 : 1) as the mobile phase. Apply separately 2 μl of each of the two solutions to the plate. After developing and removal of the plate, dry in air, examine under ultraviolet light at 365 nm. The main fluorescent spots in the chromatogram obtained with the test solution correspond in position and colour to the spots in the chromatogram obtained with the reference drug solution.
(5) Evaporate ether from the drug residue extracted by ether under Identification (4), add 30 ml of methanol and ultrasonicate for 15 minutes. Filter, evaporate the filtrate to dryness, dissolve the residue in 10 ml of water, extract with two 15-ml quantities of *n*-butanol saturated with water. Combine the *n*-butanol extracts, wash with two 10-ml quantities of water, evaporate the *n*-butanol solution to dryness, dissolve the residue in 2 ml of methanol as the test solution. Prepare a solution with 1 g of Radix et Rhizoma Notoginseng reference drug and 30 ml of methanol in the same manner as the reference drug solution. Carry out the method for thin layer chromatography (Appendix Ⅵ B), using silica gel G as the coating substance and the upper layer of a mixture of *n*-butanol, ethyl acetate and water (4 : 1 : 5) as the mobile phase. Apply separately 2 μl of each of the two solutions to the plate. After developing and removal of the plate, dry in air, spray with 10% sulfuric acid in ethanol, heat at 105℃ to the spots distinct. The main spots in the chromatogram obtained with the test solution correspond in position and colour to the spots in the chromatogram obtained with the reference drug solution. Examine under ultraviolet light at 365 nm, the fluorescent spots in the chromatogram obtained with the test solution correspond in position and colour to the spots obtained with the reference drug solution.

Other requirements Complies with the general requirements for powders (Appendix Ⅰ B).

Assay Carry out the method for High performance liquid chromatography (Appendix Ⅵ D).

Chromatographic system and system suitability Use octadecylsilane bonded silica gel as the stationary phase and a mixture of acetonitrile, water and 1% solution of acetic acid (1 : 1 : 5) as the mobile phase. As detector a spectrophotometer set at 313 nm. The number of theoretical plates of the column is not less than 2000, calculated with the reference to the peak of ferulic acid.

Reference solution Weight accurately a quantity of ferulic acid CRS in a amber volumetric flask, dissolve in methanol to produce a solution containing 20 μg per ml as the reference solution.

Test solution Weight accurately about 2.3 g of the powder

to a stopper conical flask, add 20 ml of 0.5% solution of sodium carbonate, ultrasonicate (Power, 150 W; frequency, 20 kHz) for 30 minutes, transfer the solution to a centrifuge tube, centrifugate at 3000 rpm for 10 minutes, transfer the supernatant to a separating funnel. Wash the precipitation with three 10-ml quantities 0.5% solution of sodium carbonate, combine the washings to the same separating funnel, extract with three 20-ml quantities of ether saturated with 2% solution of sodium chloride, discard the ether layer and adjust the solution pH to 1-2 with hydrochloric acid, then extract the solution with two 25-ml and two 20-ml quatities of ether saturated with 2% solution of sodium chloride and eliminate emulsification by centrifugation if necessary. Combine the ether layer and remove the solvent from the extract to dryness, dissolve the residue in methanol and transfer to a 25 ml amber volumetric flask, dilute with methanol to volume, mix well and use as the test solution. (Protect from light throughout the assay)

Procedure Inject accurately 10 μl of each of the reference solution and the test solution, respectively, into the column, calculate the content.

It contains not less than 0.10 mg of ferulic acid ($C_{10}H_{10}O_4$) per gram, referred to Radix Angelicae Sinensis.

Action To promote blood circulation to resolve stagnated blood, and reduce swelling to kill pain.

Indications Traumatic injury, bruise and pain.

Usage and dosage 1.5 g, twice a day, taken with warm boiled water or yellow rice wine.

Precaution Contraindicated for pregnant women.

Storage Preserve in tightly closed containers.

Hupo Baolong Wan
(琥珀抱龙丸)

Hupo Baolong Pills

Ingredients Rhizoma Dioscoreae (stir-baked) 256 g; Cinnabaris 80 g; Radix et Rhizoma Glycyrrhizae 48 g; Succinum 24 g; Concretio Silicea Bambusae 24 g; Lignum Santali Albi 24 g; Fructus Aurantii (stir-baked) 16 g; Poria 24 g; Arisaema Cum Bile 16 g; Fructus Aurantii Immaturus (stir-baked) 16 g; Radix et Rhizoma Ginseng Rubra 24 g.

Procedure Pulverize Succinum to very fine powder, levigate Cinnabaris to very fine powder. Pulverize the remained nine ingredients to very fine powders and mix with the above powders, sift and mix well. To each 100 g of the powders add 90-110 g of refined honey to make big honeyed pills.

Description Brownish-red big honeyed pills; taste, sweet, slightly bitterish-pungent.

Identification (1) Microscopical: Irregularly branched masses colourless, dissolved in chloral hydrate TS; hyphae, colourless or pale brown, 4-6 μm in diameter. Raphids of calcium oxalate occurring in mucilage cells, 80-240 μm long, 2-8 μm in diameter. Crystal cells square or rectangular, walls thickened, specially thickened at corners, lignified, lumina containing prisms of calcium oxalate. Irregular fragments pale yellowish-green or brownish-yellow, transparent or translucent.

(2) Grind 3 pills of the drug, cut into pieces, with 3 g of kieselguhr to fine powder. To the powder add 60 ml of ether, ultrasonicate for 10 minutes, filter and discard the ether solution, to the drug residue, expelled the solvent, add 60 ml of methanol, ultrasonicate for 30 minutes, filter and evaporate the filtrate, dissolve the residue in 30 ml of water, heat under reflux with 2 ml of hydrochloric acid and 20 ml of chloroform, allow to stand to room temperature, separate the chloroform layer and extract the water layer with 30 ml of chloroform, combine the chloroform extract and evaporate to dryness, dissolve the residue in 1 ml of ethyl acetate as the test solution. Dissolve a quantity of Glycyrrhetinic acid in ethyl acetate to produce a solution containing 0.5 mg per ml as the reference solution. Carry out the method for thin layer chromatography (Appendix Ⅵ B), using silica gel GF_{254} as the coating substance and a mixture of *n*-hexane, ethyl acetate and glacial acetic acid (15 : 4 : 1) as the mobile phase. Apply separately 5 μl of test solution and reference solution to the plate. After developing and removal of the plate, dry in air. Examine under ultraviolet light at 254 nm, the spot in the chromatogram obtained with the test solution corresponds in position and colour to the spot in the chromatogram obtained with the reference solution.

(3) Grind 3 pills, cut into pieces, with 5 g of kieselguhr to fine powder. To the powder add 80 ml of methanol, heat under reflux for 2 hours, filter and evaporate the filtrate to dryness, dissolve the residue in 30 ml of water, extract the water solution with two 30-ml quantities of chloroform, discard the chloroform layer, extract the water solution with three 30-ml quantities of *n*-butanol, combine the *n*-butanol extract, wash with two 80-ml quantities of ammonia TS. Evaporate the *n*-butanol extract to dryness, dissolve the residue in 1 ml of methanol as the test solution. Prepare a solution of 1 g of Radix et Rhizoma Ginseng reference drug in the same manner as the reference drug solution. Dissolve a quantity of ginsenoside Re CRS and ginsenoside Rg_1 CRS in methanol to produce a mixture containing 1 mg of each per ml as the reference solution. Carry out the method for thin layer chromatography (Appendix Ⅵ B), using silica gel G as the coating substance and the lower layer of the mixture of chloroform, ethyl acetate, methanol and water (15 : 40 : 22 : 10), standing below 10℃, as the mobile phase. Apply separately 5 μl of each of above three solutions to the plate. After developing and removal of the plate, dry in air. Spray with 10% sulfuric acid in ethanol, heat at 105℃ to the spots distinct. The spot in the chromatogram obtained with the test solution corresponds in position and colour to the spot in the chromatogram obtained with the reference solution and reference drug solution. Examine under ultraviolet light at 365 nm, the fluorescent spots in the chromatogram obtained with the test solution correspond in position and colour to the spots in the chromatogram obtained with the reference solution and reference drug solution.

Arsenic To 0.4 g of the drug, add 0.4 g of calcium hydroxide, mix well, add a quantity of water, stir well. After drying, ignite gently to carbonization, then ignite at 500-600℃ until the incineration is complete, allow to stand to cool, to the residue add 5 ml of hydrochloric acid and a quantity of water to make up the volume to 28 ml. Carry out the limit test for arsenic (Appendix Ⅸ F, method 1), not more than 5 ppm.

Other requirements Comply with the general requirements for pills (Appendix Ⅰ A).

Assay Take a quantity of the pills, obtained under the test of Weight variation, cut into pieces, mix well. To 1.8 g, accurately weighed, in a 250 ml of conical flask, add 10 ml of sulfuric acid and 1.5 g of potassium nitrate, heat to dissolve. Allow to cool, add 50 ml of water, then add dropwise 1% solution of potassium permanganate until a pink colour appears, then add dropwise 2% solution of ferrous sulfate until the pink colour disappears, add 2 ml of ammonium ferric sulfate IS, and titrate with ammonium thiocyanate (0.1 mol/L) VS. Each ml of ammonium thiocyanate (0.1 mol/L) VS is equivalent to 11.63 mg of HgS.

It contains not less than 107 mg and not more than 144 mg of HgS per pill, referred to cinnabaris.

Action To clear *heat* and resolve *phlegm*, and anchor the *mind*.

Indications Acute convulsion of the *phlegm-food* type due to internal impairment by undigested food with manifestations of fever, convulsion, irritability, difficulty in breathing with phlegm and panting, and proneness to fright.

Usage and dosage 1 pill, twice a day; for infants, 1/3 pill, to be taken after dissolved in water.

Precaution Contraindicated for patients with chronic convulsion, a longstanding case and deficiency of *qi*.

Strength 1.8 g per pill

Storage Preserve in tightly closed containers.

Injection Herba Erigerontis (灯盏细辛注射液, Dengzhan Xixin zhusheye)

Dengzhan Xixin Injection

Sterile aqueous products containing phenolic acids extracted from Herba Erigerontis.

Procedure Pulverize Herba Erigerontis to coarse powder. To 300 g of the powder, percolate with 0.2% sodium bicarbonate solution, collect about 10 times volume of percolation, adjust pH to 2-3 with dilute sulfuric acid TS, filter, keep the residue for latter use. Apply the filtrate to a column previously packed with polyamide powder, elute with water to discard the impurity substance, then elute with 90% ethanol, collect the elute for latter use. Extract the above residue with 90% ethanol triple, filter, combine the filtrate and the above elute, recover ethanol and concentrate in vacuum, dissolve with sodium hydroxide dilute solution, filter and dry by spraying to 4.5 g of yellowish-brown powder. Add a quantity of water for injection and 8 g of sodium chloride, after dissolved, add water for injection to 1000 ml, filter and pack, seal and sterilize.

Description A brown clear liquid.

Identification Measure 10 ml of the injection adjust pH to 2-3 with dilute hydrochloric acid TS, extract with 5 ml of *n*-butanol by shaking, evaporate the *n*-butanol layer to dryness, and dissolve the residue in 1 ml of methanol as the test solution. Dissolve a quantity of scutellarin CRS, 1,5-*O*-dicaffeoylquinic acid CRS and caffeic acid CRS in methanol to produce a mixture containing of 2 mg each per ml as the reference solution. Carry out the method for thin layer chromatography (Appendix Ⅵ B), using acetic acid as the mobile phase. Apply separately 0.5 μl of the two solutions to a polyamide membrane. After developing and removal of the membrane, dry in air. Spray with 1% ferric chloride in ethanol. The spots in the chromatogram obtained with the test solution correspond in position and colour to the spots in the chromatogram obtained with the reference solution.

pH value 5.5-7.5 (Appendix Ⅶ G).

Particulate matter in injection Comply with the test for particulate matter in injection (Appendix Ⅸ R) except oxalate.

Oxalate Measure 10 ml of the injection, adjust pH to 1-2 with dilute hydrochloric acid TS, filter, dry and apply the filtrate to a column (1 cm in internal diameter) previously packed with polyamide powder (100-200 mesh, 1 g), collect 2 ml of the initial elute, adjust pH to 5-6, add 3% solution of calcium chloride 2-3 drops, allow to stand for 10 minutes. No opalescence or precipitate should be observed.

Pyrogens Comply with the test for pyrogens (Appendix ⅩⅢ A), using 1.6 ml per kg of the rabbit's weight.

Undue toxicity Comply with the test for Undue toxicity (Appendix Ⅺ C, Volume 2).

Haemolysis and agglutination *Preparation of 2% red blood cell, RBC, suspension* Measure a quantity of blood of rabbit, transfer it into a conical flask with glass beads, shake for 10 minutes, discard the fibrinogen, and collect the defibrin blood. Wash the defibrin blood with saline for 3-5

times, 5 ml for each time, shake well and centrifuge to remove supernatant. Wash the pellet with saline until the supernatant becomes transparent, and then prepare the 2% RBC suspension with saline.

No. of tubes	1	2	3	4	5	6	7
2% RBC suspension/ml	2.5	2.5	2.5	2.5	2.5	2.5	2.5
saline/ml	2.4	2.3	2.2	2.1	2.0	2.5	distilled water (2.5 ml)
test solution/ml	0.1	0.2	0.3	0.4	0.5	0	0

Procedure Add the 2% RBC suspension and saline into 7 tubes according to the above proportions. Shake well, and keep them in 37℃, add different volume of the injection, shake well, keep them in 37℃ for 3 hours, examine the result every 30 minutes during the first hour and once per hour for the latter 2 hours.
Haemolysis and agglutination must not appear in the No. 3 tube within 2 hours.

Other requirements Comply with the general requirements for injections (Appendix Ⅰ U).

Assay ***Scutellarin*** Carry out the method for high performance liquid chromatography (Appendix Ⅵ D).

Chromatographic system and system suitability Use octadecylsilane bonded silica gel as the stationary phase and a mixture of methanol, tetrahydrofuran and 0.1% solution of phosphoric acid (14 : 14 : 72) as the mobile phase. As detector a spectrophotometer set at 355 nm. Maintain the column temperature at 40℃. The number of theoretical plates for the column is not less than 2500, calculated with the reference to the peak of scutellarin.

Reference solution Dissolve a quantity of scutellarin CRS, accurately weighed, in 90% methanol to produce a solution containing 0.1 mg per ml as the reference solution.

Test solution Measure accurately 2 ml of the injection in a 10 ml volumetric flask, add water to volume, mix well and filter. Discard the initial filtrate, and use the successive filtrate as the test solution.

Procedure Inject accurately 10 μl of the reference solution and the test solution into the column and calculate the content.
It contains not less than 0.40 mg and not more than 0.60 mg of flavonoids per ml, calculated as scutellarin ($C_{21}H_{18}O_{12}$).

Total caffeoyl ester *Reference solution* Dissolve a quantity of 1, 5-*O*-dicaffeoylquinic acid CRS, accurately weighed, in 0.1% sodium bicarbonate solution to produce a solution containing 10 μg per ml as the reference solution.

Test solution Measure accurately 1 ml of the injection in a 200 ml volumetric flask, add water to volume, and mix well as the test solution.

Procedure Carry out the method for ultraviolet spectrophotometer (Appendix Ⅴ A), measure the absorbance of the reference solution and the test solution at 305 nm, respectively, and calculate the content.
It contains not less than 2.0 mg and not more than 3.0 mg of total caffeoyl ester per ml, calculated as 1,5-*O*-dicaffeoylquinic acid ($C_{25}H_{24}O_{12}$).

Action To promote blood circulation to expel stagnated blood, and dredge meridians to kill pain.

Indications Hemiplegia from stroke, numb hands and feet, deviated mouth and eye, dysphasia, heart pain due to impeded flow of *yang-qi* in the chest; ischemic stroke, and angina pectoris in coronary heart disease with above symptoms.

Usage and dosage Intramuscular injection: 4 ml, 2-3 times a day. Acupuncture point injection: 0.5-1.0 ml per point, and maximum dose for multiple points: 6-8 ml; Intravenous drip: 20-40 ml, 1-2 times a day, dilute with 250-500 ml of 0.9% sodium chloride injection for intravenous and infusing use.
As in acidic conditions, the phenolic acids components may be precipitated, compatibility is not suitable for other strong acidic drugs in intravenous and infusing use. If the injection becomes turbid or precipitated, it is forbidion to use.

Strength (1) 2 ml per phial (2) 10 ml per phial

Storage Tightly closed.

Jianbu Wan
(健步丸)

Jianbu Pills

Ingredients Cortex Phellodendri Chinensis (processed with salt water) 40 g; Rhizoma Anemarrhenae (processed with salt water) 20 g; Radix Rehmanniae Praeparata 20 g; Radix Angelicae Sinensis 10 g; Radix Paeoniae Alba (stir-baked with wine) 15 g; Radix Achyranthis Bidentatae 35 g; Os Pardi (processed) 10 g; Carapax et Plastrum Testudinis (stir-baked with vinegar) 40 g; Pericarpium Citri Reticulatae (processed with salt water) 7.5 g; Rhizoma Zingiberis 5 g; Herba Cynomorii 10 g; Caro Caprinus seu Ovillus 320 g.

Procedure Wash Caro Caprinus seu Ovillus clean, remove the tendons, membranes and fats, add 40 g of yellow rice wine and a quantity of water, boil thoroughly. Mix and pound well with the other eleven ingredients, dry, pulverize to fine powder, sift and mix well. To each 100 g of the powder, add 5-10 g of glutinous rice powder and a quantity of water to make pasted pills, and dry.

Description Brown to deep brown pasted pills; odour, slightly stinking; taste, slightly bitter.

Identification (1) Microscopical: Fibre bundles bright yellow, surrounded by cells containing prisms of calcium oxalate, forming crystal fibres, walls of crystal cells lignified and thickened. Needle crystals of calcium oxalate in bundles or scattered, 26-110 μm long. Prisms of calcium oxalate abundant in parenchyma. Clusters of calcium oxalate 18-32 μm in diameter, occurring in paren-chymatous cells, usually in rows or several clusters in one cell. Parenchymatous cells fusiform, walls slightly thickened with minute oblique crossed striations. Parenchyma greyish-brown to blackish-brown, cells mostly shrunken, and each containing brown nucleus-like mass. Irregular masses greyish-yellow, with fine striations or pits on surface. Fragments of striated muscles numerous, pale yellow, varying in size. Parenchymatous cells filled full of starch granules and yellowish-brown masses which leaving round traces after treating with chloral hydrate TS. Starch granules ellipsoidal oval or irregular, 25-32 μm in diameter, hilum rounded dot, in the relatively small side, with obvious striations. Fragments of bone tissues pale greyish-yellow, with fine longitudinal striations and fusiform or irregular pits, border uneven.

(2) Triturate 0.5 g of the pills to powder, ultrasonicate with 10 ml of methanol for 15 minutes, filter and use the filtrate as the test solution. Prepare a solution of 0.2 g of Cortex Phellodendri Chinensis reference drug in the same manner as the reference drug solution. Dissolve a quantity of berberine hydrochloride CRS in methanol to prepare a solution containing 0.2 mg per ml as the reference solution. Carry out the method for thin layer chromatography (Appendix Ⅵ B), using silica gel G as the coating substance, and a mixture of benzene, ethyl acetate, isopropanol methanol, and concentrated ammonia TS (12 : 6 : 3 : 3 : 1) as the mobile phase. Apply separately 5 μl of each of the three solutions to the plate. After developing in a chamber pre-equlibrated with ammonia vapour and removal of the plate, dry in air. Examine under ultraviolet light at 365 nm. The fluorescent spots in the chromatogram obtained with the test solution correspond in position and colour to the spots in the chromatogram obtained with the reference drug solution and the reference solution.

(3) Triturate 15 g of the pills to powder, ultrasonicate with 50 ml of ethanol for 20 minutes, filter and evaporate the filtrate to dryness. Dissolve the residue in 20 ml of water, extract with ether by shaking until the ether layer is colourless, discard the ether solution, then extract with three 20-ml quantities of *n*-butanol saturated with water. Combine the *n*-butanol extracts, wash with three 15-ml quantities of water, discard the water washings and evaporate the *n*-butanol solution to dryness. Dissolve the residue in 1 ml of ethanol, stir well with 1 g of neutral aluminium oxide, heat to dry, triturate to fine powder and apply to a column packed with neutral aluminium oxide (100-200 meshes, 10-15 mm in inner diameter, 1 g), elute with 40 ml of methanol. Collect the eluation, evaporate to dryness and dissolve the residue in 0.5 ml of ethanol as the test solution. Dissolve a quantity of paeoniflorin CRS in ethanol to prepare a solution containing 0.8 mg per ml as the reference solution. Carry out the method for thin layer chromatography (Appendix Ⅵ B), using silica gel G as the coating substance, and a mixture of chloroform, ethyl acetate, methanol and formic acid (40 : 5 : 10 : 0.2) as the mobile phase. Apply separately 5 μl of the two solutions to the plate. After developing and removal of the plate, dry in air. Spray with 5% vanillin in sulfuric acid and heat to the spots clear. The spot in the chromatogram obtained with the test solution corresponds in position and colour to the spot in the chromatogram obtained with the reference solution.

(4) Triturate 5 g of pills, ultrasonicate with 30 ml of ethyl acetate for 15 minutes, filter; evaporate the filtrate to dryness and dissolve the residue in 1 ml of ethyl acetate as the test solution. Prepare a solution of 0.5 g of Radix Angelicae Sinensis reference drug in the same manner as the reference drug solution. Carry out the method for thin layer chromatography (Appendix Ⅵ B), using silica gel G as the coating substance and a mixture of *n*-hexane and ethyl acetate (9 : 1) as the mobile phase. Apply separately 2 μl of the above two kinds of solutions to the plate. After developing and removal of the plate, dry in air. Examine under ultraviolet light at 365 nm. The fluorescent spot in the chromatogram obtained with the test solution corresponds in position and colour to the spot in the chromatogram obtained with the reference drug solution.

Other requirements Comply with the general requirements for pills (Appendix Ⅰ A).

Assay Carry out the method for high performance liquid chromatography (Appendix Ⅵ D).

Chromatographic system and system suitability Use octadecylsilance bonded silica gel as the stationary phase and a mixture of acetonitrile and 0.05 mol/L solution of sodium dihydrogen phosphate (adjust pH to 3.0 with phosphoric acid) (25 : 75) as the mobile phase. As detector a spectrophotometer set at 347 nm. The number of theoretical plates of the column is not less than 3000, calculated with the reference to the peak of berberine hydrochloride.

Reference solution Dissolve a quantity of berberine hydrochloride CRS, accurately weighed, in methanol to prepare a solution containing 20 μg per ml.

Test solution Triturate pills to fine powder, weigh accurately 0.25 g of the powder, to a stopper conical flask, add accurately 50 ml of a solution of 1% hydrochloric acid in methanol. Stopper tightly and weigh. Ultrasonicate (power, 300 W; frequency, 50 kHz) for 30 minutes, allow to cool and weigh again. Replenish the loss of the weight with the same solvent. Mix thoroughly and centrifuge. Use the supernatant as the test solution.

Procedure Inject accurately 10 μl of each of the reference solution and the test solution into the column, and calculate the content.

It contains not less than 2.4 mg of berberine hydrochloride

($C_{20}H_{18}ClNO_4$) per gram, referred to Cortex Phellodendri Chinensis.

Action To reinforce the liver and kidney, and tone up the muscles and bones.

Indications Aching and weakness of the lower back and knees, flaccidity of lower limbs and difficulty in walking due to insufficiency in the liver and kidney.

Usage and dosage 9 g, twice a day.

Storage Preserve in tightly closed containers.

Jianmin Yanhou Pian
(健民咽喉片)

Jianmin Yanhou Tablets

Ingredients Radix Scrophulariae, Radix Ophiopogonis, Periostracum Cicadae, Fructus Chebulae, Radix Platycodonis, Radix Isatidis, Semen Sterculiae Lychnophorae, Radix Rehmanniae, Fructus Chebulae Immaturus, Radix et Rhizoma Glycyrrhizae, Oleum Menthae Dementholatum, Mentholum.

Procedure Dissolve Oleum Menthae Dementholatum, Mentholum and citrus oil in a quantity of ethanol. Decoct the other ten ingredients and a quantity of Folium Steviae 3 times, 2 hours each for the first and second times, 1 hour for the third time. Filter, combine the filtrate, and concentrate the filtrate to an appropriate amount. Add a quantity of sugar, starch and cocoa, mix and make granules; or add a quantity of sugar, starch and citric acid, mix and make granules. Dry and cool, spray with the above solution of ethanol, add a quantity of citrus powder, compress into tablets, coat with sugar or film.

Description Sugar coated or film coated tablets with yellowish-brown core; odour, aromatic; taste, sweet and cool.

Identification (1) Pulverize 10 small tablets or 7 big tablets removed the coats, to fine powder, add 20 ml of petroleum ether (30-60℃), stopper tightly, macerate for 4 hours while shaking frequently. Filter, reserve the residue for latter use and evaporate the filtrate to about 1 ml as the test solution. Dissolve menthol CRS in ethanol to prepare a solution containing 2 mg per ml as the reference solution. Carry out the method for thin layer chromatography (Appendix Ⅵ B), using silica gel G as the coating substance and a mixture of petroleum ether (60-90℃) and ethyl acetate (5 : 1) as the mobile phase. Apply separately 10 μl of each of the two solutions to the plate. After developing and removal of the plate, dry in air. Spray with a mixture of vanillin sulfate TS and ethanol (1 : 4), heat at 100℃ to the spot clear. The spot in the chromatogram obtained with the test solution corresponds in position and colour to the spot in the chromatogram obtained with the reference solution.
(2) Add 40 ml of petroleum ether (60-90℃) to the residue obtained from the Identification (1), ultrasonicate for 20 minutes, filter, and evaporate the petroleum ether from the residue. Add 40 ml of ethanol to the residue, ultrasonicate for 30 minutes, filter, and concentrate the filtrate to about 2 ml as the test solution. To 1 g of Fructus Terminaliae Immaturus reference drug, add 10 ml of acetone in a conical flask, stopper tightly, shake for 3 minutes, and filter, using the filtrate as the reference drug solution. Carry out the method for thin layer chromatography (Appendix Ⅴ B), using silica gel G mixed with sodium carboxymethylcellulose as the coating substance and a mixture of chloroform, ethyl acetate, acetone and glacial acetic acid (5 : 2 : 4 : 1) as the mobile phase. Apply separately 8 μl of the test solution and 6 μl of reference drug solution in strip to the plate. After developing and removal of the plate, dry in air. Spray with ammoniated silver nitrate TS, heat to the strips clear. The strip in the chromatogram obtained with the test solution corresponds in position and colour to the strip in the chromatogram obtained from the reference drug solution.

Other requirements Comply with the general requirements for tablets except for disintegration test (Appendix Ⅰ D).

Assay Carry out the method for high performance liquid chromatography (Appendix Ⅵ D).

Chromatographic system and system suitability Use octadecylsilance bonded silica gel as the stationary phase and a mixture of acetonitrile and 0.1% solution of phosphoric acid containing 0.1% triethylamine (1 : 99) as the mobile phase. As detector a spectrophotometer set at 273 nm. The number of theoretical plates of the column is not less than 1000, calculated with the reference to the peak of gallic acid.

Reference solution Dissolve a quantity of gallic acid CRS, accurately weighed, in 50% methanol to prepare a solution containing 20 μg per ml.

Test solution Weigh accurately 20 tablets, removed the coats, triturate to powder and mix thoroughly; weigh accurately 1.5 g of the powder to a stopper conical flask, add accurately 50 ml of 50% methanol, stopper tightly and weigh; ultrasonicate (power, 300 W; frequency, 40 kHz) for 30 minutes, allow to cool, weigh again; replenish the loss of the weight with 50% methanol and mix thoroughly. Filter, and use the successive filtrate as the test solution.

Procedure Inject accurately 20 μl of each of the reference solution and the test solution into the column, and calculate the content.
It contains not less than 0.24 mg of gallic acid ($C_7H_6O_5$) per tablet for small one, not less than 0.36 mg per tablet for big one, all referred to Fructus Chebulae and Fructus Chebulae Immaturus.

Action To relieve sore throat, nourish *yin* and promote fluid production, and purge *fire* and eliminate *toxins*.

Indications Swollen, painful throat, aphonia, or upper respiratory tract infection due to body fluids impaired by abundant *heat*.

Usage and dosage For buccal use, 2-4 tablets (small one) or 2 tablets (big one), once per hour.

Strength Each small tablet equivalent to 0.195 g of crude drug, and each big tablet equivalent to 0.292 g of crude drug

Storage Preserve in tightly closed containers.

Jianpi Wan
(健脾丸)

Jianpi Pills

Ingredients Radix Codonopsis 200 g; Rhizoma Atractylodis Macrocephalae (stir-baked) 300 g; Pericarpium Citri Reticulatae 200 g; Fructus Aurantii Immaturus (stir-baked) 200 g; Fructus Crataegi (stir-baked) 150 g; Fructus Hordei Germinatus (stir-baked) 200 g.

Procedure Pulverize the above six ingredients to fine powder, sift, mix well. To each 100 g of powder add 130-160 g of refined honey to make small honeyed pills or big honeyed pills.

Description Brown to blackish-brown small honeyed pills or

big honeyed pills; taste, slightly sweet and bitter.

Identification (1) Microscopical: Stone cells oblique square, or polygonal, tailing at one end, walls relatively thickened, with sparse pits. Epidermal cells longitudinally arranged, with one long cell connected by two shart cells alternatively, the walls of long cells thickened, sinous, and lignified.
(2) Cut 18 g of the pills into pieces, add 250 ml of water to a 500 ml round-bottom flask, connect the apparatus for determination of violate oil, add water through the top until the graduated measuring tube is full and the water overflows into flask. Add again 1 ml of petroleum ether (60-90℃) and then connect the reflux condenser. Heat under reflux for 2 hours, cool and separate the petroleum ether layer as the test solution. Prepare a solution of 1.8 g of Rhizoma Atractylodis Macrocephalae reference drug in the same manner as the reference drug solution. Carry out the method for thin layer chromatography (Appendix Ⅵ B), using silica gel G as the coating substance and petroleum ether (60-90℃) as the mobile phase. Apply separately 3 μl of each of the two solutions to the plate. After developing and removal of the plate, dry in air, spray with 10% vanillin in sulfuric acid, and heat to the spots clear. The spots in the chromatogram obtained with the test solution correspond in position and colour to the spots in the chromatogram obtained with the reference drug solution.
(3) Heat under reflux 0.2 g of the Fructus Crataegi reference drug with 20 ml of ether for 2 hours, expel the ether at a lower temperature, and dissolve the residue in 1 ml of dehydrated ethanol as the reference drug solution. Dissolve a quantity of ursolic acid CRS in dehydrated ethanol to prepare a solution containing 0.5 mg per ml as the reference solution. Carry out the method for thin layer chromatography (Appendix Ⅵ B), using silica gel G as the coating substance and a mixture of cyclohexane, chloroform, ethyl acetate and glacial acetic acid (20 : 5 : 8 : 0.5) as the mobile phase. Apply separately 2 μl each of the above two kinds of solutions and the test solution, obtained under Assay, to the plate. After developing and removal of the plate, dry in air, spray with 10% sulfuric acid in ethanol, heat at 105℃ to the spots clear. The spots in the chromatogram obtained with the test solution correspond in position and colour to the spots in the chromatogram obtained with the reference solution and the reference drug solution.
(4) Triturate well 9 g of the pills, cut into pieces, with 4 g of kieselguhr, add 40 ml of methanol and ultrasonicate for 30 minutes. Filter, evaporate the filtrate to dryness, and dissolve the residue in 5 ml of methanol as the test solution. Prepare a solution of 0.6 g of Fructus Aurantii Immaturus reference drug in the same manner as the reference drug solution. Carry out the method for thin layer chromatography (Appendix Ⅵ B), using silica gel G as the coating substance and a mixture of chloroform, methanol, acetone and formic acid (10 : 5 : 3 : 1) as the mobile phase. Apply separately 2 μl of each of the two solutions to the plate. After developing and removal of the plate, dry in air, spray with 4% ferric chloride in ethanol. The spots in the chromatogram obtained with the test solution correspond in position and colour to the spots in the chromatogram obtained with the reference drug solution.

Other requirements Comply with the general requirements for pills (Appendix Ⅰ A).

Assay Cut small honeyed pill or big honeyed pills, obtained under the test of variation weight, into pieces, mix thoroughly. Weigh accurately 4 g, add 30 ml of water, and allow disintegrating thoroughly, filter. Wash the residue with 30 ml of water, dry under room temperature to obtain soft powder, or dry at a lower temperature and then pulverize to fine powder. Transfer this powder together with the filter paper to a Soxhlet's extractor; add a quantity of ether, heat under reflux for 4 hours. Recover the ether to dryness, macerate the residue with two 10-ml quantities of petroleum ether (30-60℃), about 2 minutes for each time. Discard the petroleum ether, and dissolve the residue in a mixture of chloroform and dehydrated ethanol (2 : 3), transfer to a 2 ml volumetric flask, and dilute to the volume with the same solvent, mix thoroughly, use as the test solution. Dissolve a quantity of ursolic acid CRS, accurately weighed, in dehydrated ethanol to prepare a solution containing 0.5 mg per ml as the reference solution. Carry out the method for thin layer chromatography (Appendix Ⅵ B), using silica gel G as the coating substance and a mixture of cyclohexane, chloroform, ethyl acetate and glacial acetic acid (20 : 5 : 8 : 0.5) as the mobile phase. Apply accurately 4 μl or 6 μl of the test solution, 2 μl and 4 μl of the reference solution to the plate alternatively. After developing and removal of the plate, dry in air. Spray with 10% sulfuric acid in ethanol and heat at 105℃ to the spots clear. Cover the plate with a same size of glass plate. Carry out the method for thin layer chromatography (Appendix Ⅵ B thin layer chromatographic scanning method), scan at the wavelength of $\lambda_S = 540$ nm, $\lambda_R = 700$ nm. Measure the integration values of the absorbance from the test solution and the reference solution, respectively, and calculate the content.
It contains not less than 0.10 mg of ursolic acid ($C_{30}H_{48}O_3$) per gram for small honeyed pills, and not less than 0.90 mg per gram for big honeyed pills, referred to Fructus Crataegi.

Action To invigorate the spleen to whet appetite.

Indications Fullness in the stomach and abdomen, poor appetite and loose stools due to deficiency in the spleen.

Usage and dosage 9 g of small honeyed pills or 1 big honeyed pill, twice a day; appropriate reduction of the dosage for children.

Strength 9 g per big honeyed pill

Storage Preserve in tightly closed containers.

Jianwei Xiaoshi Pian
(健胃消食片)

Jianwei Xiaoshi Tablets

Ingredients Radix Pseudostellariae 228.6 g; Pericarpium Citri Reticulatae 22.9 g; Rhizoma Dioscoreae 171.4 g; Fructus Hordei Germinatus (stir-baked) 171.4 g; Fructus Crataegi 114.3 g.

Procedure Pulverize half quantity of Radix Pseudostellariae and Rhizoma Dioscoreae to fine powder. Decoct the remained quantity of Radix Pseudostellariae and other 3 ingredients with water for 2 times, 2 hours each time. Combine the decoctions, filter, concentrate the filtrate to a thick extract at a low temperature, or concentrate the filtrate to form a thin extract with a relative density of 1.08-1.12 (65℃), dry by spraying to fine powder, add the above fine powder and a quantity of sucrose powder and dextrin, mix thoroughly, make granules and dry, compress into 1000 tablets, coat with film; or compress into 1600 tablets.

Description Pale brownish-yellow tablets or film-coated tablets with pale brownish-yellow core, or abnormal shape tablets; slightly aromatic, taste, slightly sweet, and sour.

Identification (1) Grind 30 film-coated tablets or 48 tablets, heat under reflux with 50 ml methanol for 30

minutes, and filter. Evaporate the filtrate to dryness, and dissolve the residue in 20 ml of water. Apply to a column (1.2 cm inner diameter, 15 cm length) packed with D101 coarse bore resin. Elute with 200 ml of water, discard the water layer. Elute with 100 ml of ethanol, collect the ethanol eluate. Evaporate to dryness and dissolve the residue in 1 ml of methanol as the test solution. Decoct 5 g of Radix Pseudostellariae reference drug with water for 2 hours and centrifuge, transfer the supernatant, apply to a column packed with D101 coarse bore resin, prepare a solution in the same manner as the reference drug solution. Carry out the method for thin layer chromatography (Appendix Ⅵ B), using silica gel G as the coating substance and the mixture of toluene and ethyl acetate (4 : 1) as the mobile phase. Apply separately 20 μl of each of the above two solutions to the plate. After developing and removal of the plate, dry in air. Spray with 1% vanillin in sulfuric acid, and heat at 105℃ to the spots clear. The spots in the chromatogram obtained with the test solution correspond in position and colour to the spots in the chromatogram obtained with the reference drug solution.

(2) Grind 30 film-coated tables or 48 tablets, heat under reflux with 50 ml methanol for 30 minutes, and filter. Evaporate the filtrate to dryness, and dissolve the residue in 20 ml of water. Extract with two 20-ml quantities of ethyl acetate by shaking, combine the ethyl acetate. Evaporate the ethyl acetate extract to dryness, and dissolve the residue in 1 ml of methanol as the test solution. Decoct 2 g of Fructus Crataegi reference drug with 100 ml of water for 1 hour and filter, concentrate the filtrate to 20 ml, adjust to pH 1-2 with dilute hydrochloride acid TS. Extract with two 20-ml quantities of ethyl acetate by shaking, prepare a solution in the same manner as the reference drug solution. Carry out the method for thin layer chromatography (Appendix Ⅵ B), using silica gel G as the coating substance and the mixture of cyclohexane, ethyl acetate and formic acid (20 : 20 : 1) as the mobile phase. Apply separately 20 μl of each of the above two solutions to the plate. After developing and removal of the plate, dry in air. Spray with 2% ferric chloride in ethanol, and heat at 105℃ to the spots clear. The spots in the chromatogram obtained with the test solution correspond in position and colour to the spots in the chromatogram obtained with the reference drug solution.

Other requirements Complies with the general requirements for tablets (Appendix Ⅰ D).

Assay Carry out the method for high performance liquid chromatography (Appendix Ⅵ D).

Chromatographic system and system suitability Use octadecylsilane bonded silica gel as the stationary phase and a mixture of methanol and 0.5% solution of acetic acid (40 : 60) as the mobile phase. As detector a spectrophotometer set at 283 nm. The number of the theoretical plates of the column is not less than 2000, calculated with the reference to the peak of hesperidin.

Reference solution Dissolve 12.5 mg of hesperidin CRS, accurately weighed, in a 100 ml volumetric flask, with a quantity of methanol, dilute with methanol to volume, and mix well. Measure accurately 3 ml of the above solution in a 25 ml volumetric flask, dilute with 50% methanol to volume, mix well. (containing 15 μg of hesperidin per ml.)

Test solution Grind 10 tablets to fine powder. To 2 g, weight accurately, add accurately 20 ml of methanol, weigh, heat under reflux for 1 hour, allow to cool, weigh again, and replenish the lost weight with methanol, mix well and filter. Measure accurately 5 ml of the successive filtrate, in a 10 ml volumetric flask, and dilute with water to volume, mix well and filter, use the successive filtrate as test solution.

Procedure Inject accurately 20 μl of the reference solution and 20 μl of the test solution into the column, and calculate the content.

It contains no less than 0.12 mg of hesperidin ($C_{28}H_{34}O_{15}$) per tablet, or 0.20 mg per film-coated tablet, referred to Pericarpium Citri Reticulatae.

Action To invigorate the stomach to promote digestion.

Indications Indigestion due to hypofunctioning of the spleen and stomach, with manifestations of loss of appetite, fetid eructation and foul breath, fullness in the abdomen; indigestion with above symptoms.

Usage and dosage Taken orally by chewing, 4-6 tablets or 3 tablets (film-coated one), 3 times a day; appropriate reduction of the dosage for children.

Strength (1) 0.5 g per tablet
(2) 0.8 g per film-coated tablet

Storage Preserve in tightly closed containers.

Jiawei Shenghua Keli (加味生化颗粒)

Jiawei Shenghua Granules

Ingredients Radix Angelicae Sinensis 133 g; Semen Persicae 133 g; Herba Leonuri 133 g; Radix Paeoniae Rubra 100 g; Folium Artemisiae Argyi 100 g; Rhizoma chuanxiong 100 g; Radix et Rhizoma Glycyrrhizae praeparata Cum Melle 100 g; Rhizoma Zingiberis Praeparatum 100 g; Herba Schizonepetae 100 g; Colla Corii Asini 17 g.

Procedure Decoct the other nine ingredients, except Colla Corii Asini, with water twice, 2 hours for each time. Combine the decoctions, filter and concentrate the filtrate to a quantity, stand for 24 hours, separate the supernatant for latter use. Heat Colla Corii Asini to melt with a quantity of water, add to the above supernatant, and concentrate to a thin extract with a relative density of 1.20. Add a quantity of sucrose and dextrin, make granules, dry, and make up to 500 g.

Description Yellowish-brown granules; taste, sweet, slightly bitter.

Identification To 10 g of the granules, pulverized to fine powder, add 50 ml of methanol, ultrasonicate for 20 minutes, and filter, evaporate the filtrate to dryness. Dissolve the residue in 20 ml of water, and extract with three 20-ml quantities of *n*-butanol saturated with water, combine the *n*-butanol extracts, and wash with three 20-ml quantities of water saturated with *n*-butanol. Evaporate the *n*-butanol extracts to dryness, and dissolve the residue in 2 ml of ethanol, and mix with 2 g of neutral aluminia oxide, evaporate to dryness, and apply the mixture to a prepared neutral aluminia oxide column (100-120 mesh, 4 g, 8-10 mm in internal diameter) and elute with 50 ml of methanol, collect the eluate. Evaporate the eluate on a water bath to dryness, and dissolve the residue in 1 ml of methanol as the test solution. Dissolve a quantity of paeoniflorin CRS in methanol to prepare a solution containing 1 mg per ml as the reference solution. Carry out the method for thin layer chromatography (Appendix Ⅵ B), using silica gel G mixed with sodium carbonmethylcellulose as the coating substance, and a mixture of chloroform, ethyl acetate, methanol and formic acid (40 : 5 : 10 : 0.2) as the mobile phase. Apply separately 5 μl of each of the above two solutions to the plate. After developing and removal of the plate, dry in air

and spray with 5% vanillin in sulfuric acid, and heat at 105℃ to spot clear. The spot in the chromatogram obtained with the test solution corresponds in position and colour to the spot in the chromatogram obtained with the reference solution.

Other requirements Comply with the general requirements for granules (Appendix Ⅰ C).

Assay Carry out the method for high performance liquid chromatography (Appendix Ⅰ D).

Chromatographic system and system suitability Use octadecylsilane bonded silica gel as the stationary phase, and a mixture of acetonitrile and water (14 : 86) as the mobile phase. As detector a spectrophotometer set at 230 nm. The number of theoretical plates of the column is not less than 5000, calculated with the reference to the peak of paeoniflorin.

Reference solution Weigh accurately a quantity of paeoniflorin CRS, dissolve in methanol and mix well, to prepare a solution containing 30 μg per ml.

Test solution Weigh accurately 1.5 g of the granules obtained under the test of weight variation, pulverized to fine powder, place in a stopper conical flask, add accurately 50 ml of methanol, closely stopper and weigh. Ultrasonicate for 20 minutes (power, 250 W; frequency, 33 kHz), cool, weigh again, replenish the loss of the weight with methanol, stir well and filter. Discard the initial filtrate, and use the successive filtrate as the test solution.

Procedure Inject accurately 10 μl of each of the reference solution and the test solution into the column respectively and calculate the content.

It contains not less than 0.60 mg of paeoniflorin ($C_{23}H_{28}O_{11}$) per pack, referred to Radix Paeoniae Alba.

Action To promote blood circulation to resolve stagnated blood and warm meridians to kill pain.

Indications Prolonged lochiorrhea due to stagnation of blood and insecurity of the Thoroughfare and Conception Vessels, with manifestations of dark purple lochiorrhea with clots, and cold and painful lower abdomen.

Usage and dosage 15 g, 3 times a day. taken with boiled water.

Strength 15 g per pack

Storage Preserve in tightly closed containers.

Jiawei Xiaoyao Wan (加味逍遥丸)

Jiawei Xiaoyao Pills

Ingredients Radix Bupleuri 300 g; Radix Angelicae Sinensis 300 g; Radix Paeoniae Alba 300 g; Rhizoma Atractylodis Macrocephalae (stir-fried with bran) 300 g; Poria 300 g; Radix et Rhizoma Glycyrrhizae 240 g; Cortex Moutan 450 g; Fructus Gardeniae (stir-baked with ginger juice) 450 g; Herba Menthae 60 g.

Procedure Pulverize the above 9 ingredients to fine powder, sift and mix well. Make pills with a decoction of 100 g of Rhizoma Zingiberis Recens and dry.

Description Yellowish-brown watered pills; taste, sweet.

Identification (1) Microscopical: Irregular branched masses colourless, dissolved in chloral hydrate TS; hyphae colourless or pale brown, 4-6 μm in diameter. Clusters of calcium oxalate 18-32 μm in diameter, occurring in parenchymatous cells, usually arranged in rows, or several clusters in one cell. The fibre bundles surrounded by parenchymatous cells containing prisms of calcium oxalate, forming crystal fibres. Testa stone cells yellow or pale brown, often broken, the intact ones elongated polygonal, rectangle, or irregularly-shaped, with thickened walls and big rounded pits, lumens brownish-red.

(2) Triturate 6 g of pills to fine powder, add 10 ml of ether, stopper closely, ultrasonicate for 15 minutes, and filter. Evaporate the filtrate to dryness, and dissolve the residue in 1 ml of acetone as the test solution. Prepare a solution of 0.2 g of Radix Angelicae Sinensis reference drug in the same manner as the reference drug solution. Dissolve paeonol CRS in acetone to prepare a solution containing 1 mg per ml as the reference solution. Carry out the method for thin layer chromatography (Appendix Ⅵ B), using silica gel G as the coating substance and a mixture of cyclohexane and ethyl acetate (10 : 1) as the mobile phase. Apply separately 5 μl of each of the three solutions to the plate. After developing and removal of the plate, dry in air. Examine under ultraviolet light at 365 nm, the fluorescent spots in the chromatogram obtained with the test solution correspond in position and colour to the spots in the chromatogram obtained with the reference drug solution. Spray with 5% ferric chloride in ethanol. The spot in the chromatogram obtained with the test solution corresponds in position and colour to the spot in the chromatogram obtained with the reference solution.

(3) Triturate 6 g of pills to fine powder, ultrasonicate with 20 ml of methanol for 20 minutes, filter; evaporate the filtrate to dryness. Dissolve the residue in 10 ml of 2% solution of sodium hydroxide and heat for 30 minutes. Allow to stand to cool, extract with 10 ml of *n*-butanol by shaking, evaporate the *n*-butanol extract to dryness, and dissolve the residue in 2 ml of methanol as the test solution. Prepare a solution of 0.5 g of Radix Bupleuri reference drug in the same manner as the reference drug solution. Carry out the method for thin layer chromatography (Appendix Ⅵ B), using silica gel G as the coating substance and a mixture of chloroform, methanol and water (30 : 10 : 1) as the mobile phase. Apply separately 5 μl of each of the test solution and the reference drug solution to the plate. After developing and removal of the plate, dry in air. Spray with 2% *p*-dimethylaminobenzaldehyde in 10% sulfuric acid in ethanol and heat at 105℃ to the spots clear. The spots in the chromatogram obtained with the test solution correspond in position and colour to the spots in the chromatogram obtained with the reference drug solution.

(4) Triturate 6 g of pills to fine powder, ultrasonicate with 20 ml of petroleum ether (30-60℃) for 20 minutes, filter. Reserve the residue for later use. Evaporate the filtrate to dryness and dissolve the residue in 1 ml of chloroform as the test solution. Prepare a solution of 1 g of Rhizoma Atractylodis Macrocephalae reference drug in the same manner as the reference drug solution. Carry out the method for thin layer chromatography (Appendix Ⅵ B), using silica gel G as the coating substance and a mixture of petroleum ether (60-90℃) and ethyl acetate (19 : 1) as the mobile phase. Apply separately 5 μl of the test solution and the reference drug solution to the plate. After developing and removal of the plate, dry in air. Spray with 10% sulfuric acid in ethanol and heat at 105℃ to the spots clear. The spots in the chromatogram obtained with the test solution correspond in position and colour to the spots in the chromatogram obtained with the reference drug solution.

(5) To the reserved residue in Identification (4), expel the solvent, add 20 ml of ethanol and ultrasonicate for 20 minutes. Filter, evaporate the filtrate to dryness, and dissolve the residue in 1 ml of ethanol as the test solution.

Dissolve a quantity of geniposide CRS in ethanol to prepare a solution containing 4 mg per ml as the reference solution. Carry out the method for thin layer chromatography (Appendix Ⅵ B), using silica gel G as the coating substance and a mixture of ethyl acetate, acetone, formic acid and water (5 : 5 : 1 : 1) as the mobile phase. Apply separately 5 μl of the test solution and the reference solution to the plate. After developing and removal of the plate, dry in air. Spray with 10% sulfuric acid in ethanol and heat at 105℃ to the spots clear. The spot in the chromatogram obtained with the test solution corresponds in position and colour to the spot in the chromatogram obtained with the reference solution.

Other requirements Comply with the general requirements for pills (Appendix Ⅰ A).

Assay Carry out the method for high performance liquid chromatography (Appendix Ⅵ D).

Chromatographic system and system suitability Use octadecylsilance bonded silica gel as the stationary phase and a mixture of methanol and 0.05 mol/L solution of disodium hydrogen phosphate (adjust pH to 7.4 with 0.05 mol/L solution of potassium dihydrogen phosphate) (23 : 77) as the mobile phase. As detector a spectrophotometer set at 230 nm. The number of theoretical plates of the column is not less than 5000, calculated with the reference to the peak of paeoniflorin.

Reference solution Dissolve a quantity of paeoniflorin CRS, accurately weighed, in methanol to prepare a solution containing 60 μg per ml.

Test solution Triturate pills to fine powder, weigh accurately 1 g of the powder, to a stopper conical flask, add accurately 50 ml of dilute ethanol, stopper tightly and weigh. Ultrasonicate (powder, 260 W; frequency, 40 kHz) for 30 minutes, cool, weigh again and replenish the lost weight with dilute ethanol. Mix thoroughly and filter, use the successive filtrate as the test solution.

Procedure Inject accurately 10 μl of each of the reference solution and the test solution into the column, and calculate the content.

It contains not less than 1.9 mg of paeoniflorin ($C_{23}H_{28}O_{11}$) per gram, referred to Radix Paeoniae Alba and Cortex Moutan.

Action To soothe the liver and clear *heat*, and invigorate the spleen and nourish blood.

Indications Distending pain in the hypochondria, dizziness, lethargy, poor appetite, menstrual disorders and distending pain in the navel and abdomen due to stagnation of *liver-qi*, a deficiency of blood and disharmony between the liver and spleen.

Usage and dosage 6 g, twice a day.

Precaution Absolutely avoid getting angry and overwork; and avoid cold, raw and greasy foods.

Strength 6 g per 100 pills

Storage Preserve in well closed containers, protected from moisture.

Jiebai Wan
(洁白丸)

Jiebai Pills

Jiebai Pills are prescription used by the Tibetan nationality.

Ingredients Fructus Chebulae (stewed) 370 g; Calcitum 210 g; Herba Pterocephali 85 g; Faeces Trogopteri Extractum 178 g; Radix Inulae 26 g; Fructus Punicae Granati 26 g; Fructus Chaenomelis 26 g; Lignum Aquilariae Resinatum 19 g; Flos Caryophylli 20 g; Calx Pulveratum 13 g; Flos Carthami 6 g; Semen Myristicae 13 g; Semen Alpiniae Katsumadai 13 g; Fructus Tsaoko (husked) 13 g.

Procedure Pulverize the above ingredients, except Faeces Trogopteri Extractum, to fine powder, sift and mix well, then add Faeces Trogopteri Extractum, 370 g of refined honey, and a quantity of water to make pills, dry and polish; or coat with film.

Description Dark brown water-honeyed pills, or film coated water-honeyed pills with dark brown core; odour, aromatic; taste, astringent, bitter and pungent.

Identification (1) Triturate 10 g of the pills to fine powder, add 50 ml of dehydrated ethanol and ultrasonicate for 40 minutes, filter. Evaporate the filtrate to 25 ml and apply to a small column packed with neutral aluminium oxide (100-120 mesh, 10 g, 1 cm in diameter), collect the elute, evaporate to 5 ml and use as the test solution. Dissolve a quantity of eugenol CRS in dehydrated ethanol to prepare a solution containing 10 μl per ml as the reference solution. Dissolve a quantity of alantolactone CRS in methanol to prepare a solution containing 2 mg per ml as another reference solution. Carry out the method for thin layer chromatography (Appendix Ⅵ B), using silica gel G as the coating substance and a mixture of toluene, ethyl acetate and formic acid (38 : 2 : 0.1) as the mobile phase. Apply separately 5 μl of the test solution and 2 μl of each of the reference solutions to the plate. After developing and removal of the plate, dry in air. Spray with 2% vanillin in sulfuric acid and heat at 105℃ to the spots clear. The spots in the chromatogram obtained with the test solution correspond separately in position and colour to the spot in the chromatogram obtained with the reference solutions.

(2) Triturate 5 g of the pills to fine powder, add 20 ml of ethanol and ultrasonicate for 20 minutes, filter; evaporate the filtrate to 5 ml and use as the test solution. Prepare a solution of 1 g of Fructus Chebulae reference drug in the same manner as the reference drug solution. Dissolve a quantity of gallic acid CRS in ethanol to prepare a solution containing 0.5 mg per ml as the reference solution. Carry out the method for thin layer chromatography (Appendix Ⅵ B), using silica gel G as the coating substance and a mixture of chloroform, ethyl acetate and formic acid (6 : 4 : 1) as the mobile phase. Apply separately 5 μl of each the above three kinds of solutions to the plate. After developing and removal of the plate, dry in air. Spray with 2% ferric chloride in ethanol. The spots in the chromatogram obtained with the test solution correspond in position and colour to the spots in the chromatogram obtained with the reference drug solution and reference solution.

Other requirements Comply with the general requirements for pills except for disintegration test (Appendix Ⅰ A).

Action To invigorate the spleen and regulate the stomach function to relieve pain and vomiting, and to cure dysuria.

Indications Distension and fullness sensation in the chest and abdomen, epigastric pain, dyspepsia, vomiting and diarrhea; dysuria.

Usage and dosage 1 pill, taken after being well chewed, 2-3 times a day. 0.8 g of film coated pills, 2-3 times a day.

Strength (1) 0.8 g per pill
(2) 0.8 g per four-pill for film coated ones

Storage Preserve in tightly closed containers.

Jieji Ningsou Wan
(解肌宁嗽丸)

Jieji Ningsou Pills

Ingredients Folium Perillae 48 g; Radix Peucedani 80 g; Radix Puerariae Lobatae 80 g; Semen Armeniacae Amarum 80 g; Radix Platycodonis 80 g; Rhizoma Pinelliae (processed) 80 g; Pericarpium Citri Reticulatae 80 g; Bulbus Fritillariae Thunbergii 80 g; Radix Trichosanthis 80 g; Fructus Aurantii 80 g; Poria 64 g; Radix Aucklandiae 24 g; Radix Scrophulariae 80 g; Radix et Rhizoma Glycyrrhizae 64 g.

Procedure Pulverize the above fourteen ingredients to fine powder, sift, mix well. To each 100 g of powder add 100-120 g of refined honey to make big honeyed pills.

Description Blackish-green big honeyed pills; taste, slightly bitter and pungent.

Identification (1) Microscopical: Starch granules ovate, 35-48 μm in diameter, hilum pointed, V-shaped or hoof-shaped, situated at the small end, with densely minute striations. Irregularly branched masses colourless, dissolved in chloral hydrate TS; hyphae colourless or pale brown, 4-6 μm in diameter. Mesophyll containing minute clusters of calcium oxalate, 4-8 μm in diameter. Needle crystals of calcium oxalate in bundles, 32-144 μm long, containing in mucilage cells or isolated, slender. Prisms of calcium oxalate abundant in parenchyma. Anastomosing laticiferous vessels, 14-25 μm in diameter, containing pale yellow granules. Stone cells orange-yellow, musseled-shaped, walls relatively thickened, pits well-marked and situated at the broader side. Stone cells yellowish-brown or colourless, subrectangular, subrounded, or irregular, with well marked striations, up to 94 μm in diameter. Fibre bundles surrounded by parenchymatous cells which containing prisms of calcium oxalate, forming crystal fibres. Fibres in bundles, surrounded by cells containing prisms of calcium oxalate, forming crystal fibres, walls of crystal cells thickened and lignified. Bordered pitted vessels large, frequently broken, some bordered pits hexangular or rhombic, arranged closely.
(2) Heat under reflux 10 g of the pills, cut into pieces, with 30 ml of methanol for 1 hour, cool, filter and evaporate the filtrate to dryness. Dissolve the residue in 2 ml of methanol as the test solution. Dissolve a quantity of hesperidin CRS in methanol to prepare a saturated solution as the reference solution. Carry out the method for thin layer chromatography (Appendix Ⅵ B), using high performance silica gel G as the coating substance, and a mixture of ethyl acetate, methanol and water (100 : 17 : 13) as the mobile phase. Apply separately 2 μl of each of the two solutions to the plate. After developing to ascend about 5 cm above the base line, remove the plate, dry in air. Develop again using the upper layer of a mixture of toluene, ethyl acetate, formic acid and water (20 : 10 : 1 : 1) as the mobile phase. After developing to about 8 cm and removal of the plate, dry in air. Spray with aluminum chloride TS and examine under ultraviolet light at 365 nm. The fluorescent spot in the chromatogram obtained with test solution corresponds in position and colour to the spot in the chromatogram obtained with reference solution.

Other requirements Comply with the general requirements for pills (Appendix Ⅰ A).

Action To release the exterior to disseminate *lung-qi*, and relieve cough and resolve phlegm.

Indications Common cold in children due to affliction from external *wind-cold*, blockage of the *lung* by phlegm with manifestations of fever and coughing with expectoration of profuse phlegm.

Usage and dosage 1/2 pill for children of 1 year old, 1 pill for children of 2-3 years old, twice a day.

Strenght 3 g per pill

Storage Preserve in tightly closed containers.

Jingfukang Keli
(颈复康颗粒)

Jingfukang Granules

Ingredients Rhizoma et Radix Notopterygii; Rhizoma Chuanxiong; Radix Puerariae Lobatae; Radix Gentianae Macrophyllae; Radix et Rhizoma Clematidis; Rhizoma Atractylodis; Radix et Rhizoma Salviae Miltiorrhizae; Radix Paeoniae Alba; Pheretima (stir-baked with wine); Flos Carthami; Olibanum (processed); Radix Astragali; Radix Codonopsis; Radix Rehmanniae; Concha Haliotidis; Ophicalcitum (calcined); Cortex Phellodendri Chinensis; Semen Vaccariae (stir-baked); Semen Persicae (barked); Myrrha (processed); Eupolyphaga seu Steleophaga (stir-baked with wine).

Procedure Isolate the volatile oil from Rhizoma Chuanxiong, Rhizoma Atractylodis, Rhizoma et Radix Notopterygii, Olibanum and Myrrha by distillation, coated with betacyclodextrin, dry for latter use. Decoct the residue of distillation and the other sixteen ingredients with water twice, each for 2 hours. Combine the decoctions, filter, concentrate the filtrate in vaccum, dry by spraying to make powder, mix with the above coated volatile oil, a quantity of lactose and magnesium stearate, mix well, make granules.

Description Yellowish-brown to brown granules; taste, slightly bitter.

Identification (1) Pulverize 2 g of the granules to the fine powder, add 25 ml of methanol, ultrasonicate for 20 minutes, filter, evaporate the filtrate to dryness, dissolve the residue in 10 ml of 0.5 mol/L hydrochloric acid solution. Extract with two 15-ml quantities of ethyl acetate by shaking, discard the ethyl acetate extracts, adjust the aqueous solution to pH 12 with ammonia TS. Extract with two 15-ml quantities of chloroform by shaking, combine the chloroform extracts, evaporate to dryness, dissolve the residue in 1 ml of methanol as the test solution. To 0.1 g of Cortex Phellodendri Chinensis reference drug, add 10 ml of methanol, ultrasonicate for 20 minutes, filter, use the filtrate as the reference drug solution. Dissolve a quantity of berberine hydrochloride CRS in methanol to prepare a solution containing 0.1 mg per ml as the reference solution. Carry out the method for thin layer chromatography (Appendix Ⅵ B), using silica gel G as the coating substance and a mixture of xylene, ethyl acetate, isopropanol, methanol and concentrated ammonia TS (10 : 6 : 3 : 3 : 1) as the mobile phase, pre-equilibrate with an equal volume of concentrated ammonia TS for a few minutes. Apply separately 2 μl of each of the above three solutions to the plate. After developing and removal of the plate, dry in air. Examine under ultraviolet light at 365 nm, the spots in the chromatogram obtained with the test solution correspond in position and colour to the spots in chromatogram obtained with the reference drug solution and the reference solution.
(2) Pulverize 2 g of the granules to the fine powder, add 50 ml of methanol, ultrasonicate for 20 minutes, filter,

evaporate the filtrate to dryness, dissolve the residue in a quantity of water. Apply to a column packed with macroporous resin D101 (1.5 cm in internal diameter, 12 cm long), elute with 30 ml of water, discard the water solution; elute with 2 ml of ammonia TS; elute with 80 ml of water, discard the water solution; elute with 50 ml of 40% ethanol, collect the eluates for the latter use; elute with 70 ml of 70% ethanol, collect the eluates, evaporate to dryness. Dissolve the residue in 20 ml of *n*-butanol saturated with water, wash with 10 ml of ammonia TS, evaporate the *n*-butanol solution to dryness, dissolve the residue in 1 ml of dehydrated ethanol as the test solution. Dissolve astragaloside Ⅳ CRS in methanol to prepare a solution containing 1 mg per ml as the reference solution. Carry out the method for thin layer chromatography (Appendix Ⅵ B), using silica gel G as the coating substance and the lower layer of chloroform, methanol and water (13 : 6.5 : 2), stood below 10℃, as the mobile phase. Apply separately 10 μl of the test solution and 4 μl of the reference solution to the plate. After developing and removal of the plate, dry in air, spray with 10% sulfuric acid in ethanol, heat at 100℃ to the spots clear. The spot in the chromatogram obtained with the test solution corresponds in position and colour to the spot in chromatogram obtained with the reference solution.

(3) Evaporate the eluates of 40% ethanol, obtained in the test for Identification (2), to dryness. Dissolve the residue with 10 ml of *n*-butanol saturated with water, evaporate the supernatant to dryness, dissolve the residue in 2 ml of methanol as the test solution. Dissolve paeoniflorin CRS in methanol to prepare a solution containing 1 mg per ml as the reference solution. Carry out the method for thin layer chromatography (Appendix Ⅵ B), using silica gel G as the coating substance and a mixture of chloroform, ethyl acetate, methanol and formic acid (40 : 5 : 10 : 0.2) as the mobile phase. Apply separately 3 μl of each of the test solution and the reference solution to the plate. After developing and removal of the plate, dry in air, spray with 5% vanillin in sulfuric acid, heat to the spot clear. The spot in the chromatogram obtained with the test solution corresponds in position and colour to the spot in chromatogram obtained with the reference solution.

(4) Pulverize 5 g of the granules to the fine powder, add 50 ml of methanol, ultrasonicate for 20 minutes, filter, evaporate the filtrate to dryness, dissolve the residue in 20 ml of water, adjust to pH 12 with ammonia TS. Extract with two 20-ml quantities of ethyl acetate by shaking, discard the ethyl acetate extracts, adjust the water solution to pH 2 with dilute hydrochloric acid TS. Extract with two 20-ml quantities of ethyl acetate by shaking, combine the ethyl acetate extracts, evaporate to dryness, dissolve the residue in 1 ml of methanol as the test solution. Dissolve sodium danshensu CRS in methanol to prepare a solution containing 1 mg per ml as the reference solution. Carry out the method for thin layer chromatography (Appendix Ⅵ B), using silica gel GF_{254} mixed with sodium carboxymethyl cellulose as the coating substance and a mixture of chloroform, ethyl acetate, acetone and formic acid (20 : 10 : 15 : 4) as the mobile phase. Apply separately 3 μl of each of the test solution and the reference solution to the plate. After developing and removal of the plate, dry in air. Examine under ultraviolet light at 254 nm after exposure to ammonia vapour, the spot in the chromatogram obtained with the test solution corresponds in position and colour to the spot in chromatogram obtained with the reference solution.

Water Not more than 7.0 per cent (Appendix Ⅸ H).

Other requirements Comply with the general requirements for granules (Appendix Ⅰ C).

Assay Carry out the method for high performance liquid chromatography (Appendix Ⅵ D).

Chromatographic system and system suitability Use octadecylsilane bonded silica gel as the stationary phase and a mixture of methanol, water and phosphoric acid (25 : 75 : 0.2) as the mobile phase. As detector a spectrophotometer set at 250 nm. The number of theoretical plates of the column is not less than 2000, calculated with the reference to the peak of puerarin.

Reference solution Dissolve a quantity of puerarin CRS, accurately weighed, in methanol to prepare a solution containing 50 μg per ml as the reference solution.

Test solution Weigh accurately 0.5 g of the granules, obtained in the test of weight variation and triturated to fine powder, to a stopper conical flask, accurately add 25 ml of methanol, tightly stopper and weigh. Ultrasonicate (power, 160 W; frequency, 50 kHz) for 30 minutes, allow to stand to cool, weight again, replenish the loss of the weight with methanol, shake thoroughly. Separate the supernatant, filter, use the successive filtrate as the test solution.

Procedure Inject accurately 5 μl of each of the reference solution and the test solution into the column and calculate the content.

It contains not less than 8.0 mg of puerarin ($C_{21}H_{20}O_9$) per pack, referred to Radix Puerariae Lobatae.

Action To promote blood circulation and dredge meridians, and disperse *wind* and kill pain.

Indications Cervical spondylopathy due to retention of *wind-dampness* with manifestations of dizziness, stiff neck, aching pain of the shoulder and back, and numbness of hands and feet.

Usage and dosage Taken with boiled water, 1-2 packs, twice a day after meals.

Precaution It is forbidden to prescribe to pregnant women. Be cautious with patients about digestive tract ulcer and renal hypertension, or follow doctor's order. Temporarily cease medication when one has fever and nasopharyngeal pain due to common cold.

Strength 5 g per pack

Storage Preserve in tightly closed containers.

Jinguo Hanpian
(金果含片)

Jinguo Tablets

Ingredients Radix Rehmanniae; Radix Scrophulariae; Fructus Chebulae Immaturus; Periostracum Cicadae; Semen Sterculiae Lychnophorae; Radix Ophiopogonis; Radix Adenophorae; Radix Pseudostellariae; Pericarpium Citri Reticulatae.

Procedure Decoct Radix Rehmanniae, Radix Scrophulariae, Fructus Chebulae Immaturus, Periostracum Cicadae with water twice, 30 minutes for each time; filter, combine the filtrate and concentrate to a thin extract with a relative density of 1.14 (80℃), add two times quantity of ethanol, stir thoroughly, allow standing for 24 hours. Concentrate the supernatant to an appropriate amount, reserve for later use. Decoct the other 5 ingredients with water twice, 30 minutes for each time; filter, combine the filtrate and concentrate to an appropriate amount. Combine this filtrate with the above reserving, and concentrate to an appropriate amount, add a quantity of sugar and stevioside, mix

thoroughly, make granules, dry; spray an ethanol solution containing Oleum Menthae Dementholatum, seal for 2 hours. Add a quantity of excipient, mix thoroughly, compress into tablets.

Description Pale redish-brown to brown tablets; taste, sweet, followed by a sensation of cool.

Identification (1) Triturate 10 tablets to fine powder, add 100 ml of water and 10 ml of dilute hydrochloric acid TS, heat to dissolve the powder; extract with 40 ml of ethyl acetate by shaking slightly, evaporate the ethyl acetate extract to about 2 ml, as the test solution. Decoct 2 g of Fructus Chebulae Immaturus reference drug with 100 ml of water for 15 to 20 minutes, at mean while add 20-30 ml of dilute hydrochloric acid TS constantly, then filter while hot. Extract the filtrate with 50 ml of ether by shaking slightly; evaporate the extract to about 5 ml, as the reference drug solution. Dissolve a quantity of gallic acid CRS in ethyl acetate to prepare a solution containing 2 mg per ml as the reference solution. Carry out the method for thin layer chromatography (Appendix Ⅵ B), using silica gel G mixed with sodium carboxyme thylcellulose as the coating substance and a mixture of chloroform, butyl acetate, methanol and formic acid (4 : 1 : 0.6 : 0.7) as the mobile phase. Apply separately 10 μl of the test solution, 5 μl of each of the reference drug solution and the reference solution to the plate. After developing at 10-20℃ and removal of the plate, dry in air. Spray with 2% ferric chloride in ethanol. The spots in the chromatogram obtained with the test solution correspond in position and colour to the spots in the chromatogram obtained with the reference solution and the reference drug solution.

(2) Triturate 5 tablets to fine powder, add 30 ml of ethyl acetate, and ultrasonicate for 30 minutes, filter; evaporate the filtrate to dryness, dissolve the residue in 1 ml of methanol as the test solution. Decoct 0.25 g of Pericarpium Citri Reticulatae reference drug with 50 ml of water for 20 minutes, filter, apply the filtrate to a small column packed with dry polyamide (60 mesh, 2 g), and elute with 20 ml of 30% ethanol and 30 ml of ethyl acetate, collect the ethyl acetate elution and evaporate to dryness; dissolve the residue in 1 ml of methanol as the reference drug solution. Carry out the method for thin layer chromatography (Appendix Ⅵ B), using silica gel G mixed with sodium carboxyme thylcellulose as the coating substance and a mixture of petroleum ether (60-90℃) and ethyl acetate (1 : 1) as the mobile phase. Apply separately 10 μl of the test solution and 5 μl of the reference drug solution to the plate. After developing and removal of the plate, dry in air. Examine under ultraviolet light at 365nm. The fluorescent spots in the chromatogram obtained with the test solution correspond in position and colour to the spots in the chromatogram obtained with the reference drug solution.

(3) Triturate 20 tablets to fine powder, add 50 ml of ethanol, ultrasonicate for 1 hour, allow to stand, filter, evaporate the filtrate to dryness; dissolve the residue in 30 ml of water while heating, extract with two 30-ml quantities of ether by shaking; then extract the water solution with 30 ml of *n*-butanol saturated with water by shaking, wash the butanol extract with 10 ml of water, evaporate to dryness. Dissolve the residue in 0.5 ml of methanol as the test solution. Heat under reflux 2.5 g of Radix Scrophulariae reference drug, with 50 ml of ethanol for 1 hour, filter; use the filtrate to prepare the reference drug solution in the same manner as described in the test solution preparation, beginning at the words "evaporate the filtrate to dryness". Carry out the method for thin layer chromatography (Appendix Ⅵ B), using silica gel G mixed with sodium carboxyme thylcellulose as the coating substance and a mixture of chloroform and methanol (5 : 1) as the mobile phase. Apply separately 10 μl of the test solution and 2 μl of the reference drug solution to the plate. Pre-equilibrate the plate in the chamber for 30 minutes. After developing and removal of the plate, dry in air. Spray with 1% vanillin in sulfuric acid until the spots turning into red colour. The spot in the chromatogram obtained with the test solution corresponds in position and colour to the spot in the chromatogram obtained with the reference drug solution, allow to stand, the colour of the spots becoming dark.

Other requirements Comply with the general requirements for tablets (Appendix Ⅰ D).

Assay Carry out the method for high performance liquid chromatography (Appendix Ⅵ D).

Chromatographic system and system suitability Use octadecylsilance bonded silica gel as the stationary phase and a mixture of acetonitrile and 1.5% solution of acetic acid (17 : 83) as the mobile phase. As detector a spectrophotometer set at 284 nm. The number of theoretical plates of the column is not less than 2000, calculated with the reference to the peak of hesperidin.

Reference solution Dissolve a quantity of hesperidin CRS, accurately weighed, in methanol to prepare a solution containing 48 μg per ml.

Test solution Weigh accurately 20 tablets, triturate to fine powder; weigh accurately 2 g of the powder, place to a Soxhlet's extractor, add 80 ml of methanol, heat under reflux until the extract colourless and cool. Transfer the extract to a 100 ml volumetric flask, wash the vessel with a quantity of methanol several times; add the washing to the same volumetric flask, and dilute with methanol to the volume. Mix thoroughly and filter, use the successive filtrate as the test solution.

Procedures Inject accurately 10 μl of each fo the reference solution and the test solution into the column, and calculate the content.

It contains not less than 0.40 mg of hesperidin ($C_{28}H_{34}O_{15}$) per tablet, referred to Pericarpium Citri Reticulatae.

Action To nourish *yin* to promote body *fluids* production, and clear *heat* to relieve sore throat.

Indications Red and swollen throat, dry mouth and throat due to impairment of *yin* from *lung-heat*; acute or chronic pharyngitis with above symptoms.

Usage and dosage For buccal use, 2-4 tablets in each hour, 10-20 tablets a day.

Precaution Nausea and discomfort of the epigastrium are seen in a few patients after taking it.

Strength 0.55 g per tablet

Storage Preserve in tightly closed containers.

Jingzhi Guanxin Keli
(精制冠心颗粒)

Jingzhi Guanxin Granules

Ingredients Radix et Rhizoma Salviae Miltiorrhizae 456 g; Radix Paeoniae Rubra 228 g; Rhizoma Chuanxiong 228 g; Flos Carthami 228 g; Lignum Dalbergiae Odoriferae 152 g.

Procedure Decoct Radix et Rhizoma Salviae Miltiorrhizae, Radix Paeoniae Rubra, Rhizoma Chuanxiong and Lignum Dalbergiae Odoriferae with water for 3 times, 2 hours for the first time, 1.5 hours for the second time and 1 hour for the third time, filter, combine the filtrate. Macerate Flos

Carthami with a quantity of water at 80℃ for 2 times, 2 hours for the first time and 1 hour for the second time, filter and combine with the above filtrate, concentrate to a thick extract, dry at 80℃, pulverize to fine powder, add a quantity of sucrose and dextrin, stir well, make granules and dry, make to 1300 g.

Description Brown granules; taste, slightly sweet and slightly bitter.

Identification (1) Dissolve 1.3 g of the granules in 10 ml of water, adjust pH to 2 with dilute hydrochloric acid TS, extract with 20 ml of ethyl acetate by shaking, evaporate the extract to dryness, dissolve the residue in 2 ml of methanol as the test solution. Decoct 0.5 g of Radix et Rhizoma Salviae Miltiorrhizae reference drug with a quantity of water for 30 minutes, filter, add water in the filtrate to 10 ml, prepare a solution in the same manner as the test solution preparation as the reference drug solution. Dissolve a quantity of sodium danshensu CRS in methanol to prepare a solution containing 1 mg per ml as the reference solution. Carry out the method for thin layer chromatography (Appendix Ⅵ B), using silica gel G as the coating substances and a mixture of chloroform, acetone and formic acid (25 : 10 : 4) as the mobile phase. Apply separately 2 μl of each of the above three solutions to the plate. After developing and removal of the plate, dry in air. Expose to ammonia vapour, stand for 10 minutes, and examine under ultraviolet light at 365 nm. The fluorescent spots in the chromatogram obtained with the test solution correspond in position and colour to the spots in the chromatogram obtained with the reference drug solution and the reference solution.
(2) Dissolve 2.6 g of the granules in 10 ml of water, add 10 ml of ether, shake, and extract the water layer with 15 ml of *n*-butanol saturated with water by shaking. Evaporate *n*-butanol extract to dryness on a water bath, dissolve the residue in 1 ml of dehydrated ethanol as the test solution. To 0.5 g of Radix Paeoniae Rubra reference drug, add 10 ml of ethanol, ultrasonicate for 5 minutes, filter and evaporate the filtrate to dryness, dissolve the residue in 1 ml of dehydrated ethanol as the reference drug solution. Dissolve a quantity of paeoniflorin CRS in dehydrated ethanol to prepare a solution containing 2 mg per ml as the reference solution. Carry out the method for thin layer chromatography (Appendix Ⅵ B), using silica gel G as the coating substances and a mixture of chloroform, ethyl acetate, methanol and formic acid (40 : 5 : 10 : 0.2) as the mobile phase. Apply separately 3 μl of each of the above three solutions to the plate. After developing and removal of the plate, dry in air. Spray with 5% vanillin in sulfuric acid, heat at 105℃ to the spots clear. The spots in the chromatogram obtained with the test solution correspond in position and colour to the spots in the chromatogram obtained with the reference drug solution and the reference solution.

Other requirements Comply with the general requirements for granules (Appendix Ⅰ C).

Action To promote blood circulation to resolve stagnated blood.

Indications Impeded flow of *yang-qi* in the chest due to accumulation of stagnated blood with manifestations of constriction in the chest and stabbing pain in the precardium; angina pectoris in coronary heart disease with above symptoms.

Usage and dosage Taken after dissolved in boiled water. 1 bag, 2-3 times a day.

Strength 13 g per pack

Storage Preserve in tightly closed containers.

Jingzhi Guanxin Pian
(精制冠心片)

Jingzhi Guanxin Tablets

Ingredients Radix et Rhizoma Salviae Miltiorrhizae 375 g; Radix Paeoniae Rubra 187.5 g; Rhizoma Chuanxiong 187.5 g; Flos Carthami 187.5 g; Lignum Dalbergiae Odoriferae 125 g.

Procedure Isolate volatile oil from Lignum Dalbergiae Odoriferae by distillation, collect the water extract solution in another container. Heat under reflux the other four ingredients with 85% ethanol twice, 3 hours for the first time, 2 hours for the second time, filter, combine the filtrates, recover ethanol, combine with the above water solution, concentrate in vaccum to form a thick extract with a relative density of 1.35-1.40 (50℃), add a quantity of excipient to make granules and dry. To the granules add the above essential oil of Lignum Dalbergiae Odoriferae, mix well, compress into 1000 tablets, coat with sugar.

Description Sugar coated tablets with dark brown core; odour, slightly aromatic; taste, slightly bitter and pungent.

Identification (1) Pulverized 5 tablets, removed sugar coats to fine powder, add 20 ml of ether, ultrasonicate for 5 minutes, filter and use the filtrate as the test solution. Prepare a solution of 1 g of Rhizoma Chuanxiong reference drug and 10 ml of ethanol in the same manner as the reference drug solution. Carry out the method for thin layer chromatography (Appendix Ⅵ B), using silica gel G as the coating substance and a mixture of *n*-hexane and ethyl acetate (9 : 1) as the mobile phase. Apply separately 5 μl of each of the two solutions to the plate. After developing and removal of the plate, dry in air, examine under ultraviolet light at 365 nm. The brilliant blue fluorescent spots in the chromatogram obtained with the test solution correspond in position and colour to the spots in the chromatogram obtained with the reference drug solution.
(2) Heat under reflux 5 tablets, removed sugar coats and pulverized to powder, with 25 ml of dehydrated ethanol for 1 hour, filter and evaporate the filtrate to dryness. Dissolve the residue in 10 ml of water, extract with two 10-ml quantities of ether by shaking, discard the ether solution, extract the water solution with three 15-ml quantities of *n*-butanol saturated with water by shaking. Combine the extract, evaporate to dryness, dissolve the residue in 2 ml of dehydrated ethanol as the test solution. Dissolve a quantity of paeoniflorin CRS in ethanol to prepare a solution containing 1 mg per ml as the reference solution. Carry out the method for thin layer chromatography (Appendix Ⅵ B), using silica gel G as the coating substance and a mixture of chloroform, ethyl acetate, methanol and formic acid (40 : 5 : 10 : 0.2) as the mobile phase. Apply separately 10 μl of the test solution and 5 μl of the reference solution to the plate. After developing and removal of the plate, dry in air. Spray with 5% sulfuric acid in ethanol, heat at 105℃ to the spots clear. The spot in the chromatogram obtained with the test solution corresponds in position and colour to the spot in the chromatogram obtained with the reference solution.

Other requirements Comply with the general requirements for tablets (Appendix Ⅰ D).

Assay Carry out the method for high performance liquid chromatography (Appendix Ⅵ D).

Chromatographic system and system suitability Use octadecylsilance bonded silica gel as the stationary phase and

a mixture of methanol and water (80 : 20) as the mobile phase. As detector a spectrophotometer set at 270 nm. The number of theoretical plates of the column is not less than 3000, calculated with the reference to the peak of tanshinone ⅡA.

Reference solution Place a quantity of tanshinone ⅡA CRS, accurately weighed, to a amber volumetric flask, add methanol to prepare a solution containing 20 μg per ml.

Test solution Weigh accurately 10 tablets, removed the coats, and triturate to fine powder; weigh accruately 0.5 g of the fine powder, then place to a stopper conical flask. Add accurately 25 ml of methanol, stopper closely and weigh. Ultrasonicate (power, 250 W; frequency, 33 kHz) for 15 minutes, allow to stand to cool, weigh again and replenish the loss of the weight with methanol and mix well. Filter, and use the successive filtrate as the test solution.

Procedure Inject accurately 10 μl of each of the reference solution and the test solution into the column, and calculate the content.

It contains not less than 1.0 mg of tanshinone ⅡA ($C_{19}H_{18}O_3$) per tablet, referred to Radix et Rhizoma Salviae Miltiorrhizae.

Action To promote blood circulation to resolve stagnant blood.

Indications Impeded flow of *yang-qi* in the chest due to accumulation of stagnated blood with manifestations of constriction in the chest and stabbing pain in the precardium; angina pectoris in coronary heart disease with above symptoms.

Usage and dosage 6-8 tablets, 3 times a day.

Storage Preserve in tightly closed containers.

Jinpu Jiaonang
(金蒲胶囊)

Jinpu Capsules

Ingredients Calculus Bovis Artifactus; Flos Lonicerae Taponicae; Scolopendra; Squama Manis (scalded); Venenum Bufonis; Herba Taraxaci; Herba Scutellariae Barbatae; Pseudobulbus Cremastrae seu Pleiones; Rhizoma Curcumae; Herba Hedyotidis; Radix Sophorae Flavescentis; Herba Solani Nigri; Margarita; Radix et Rhizoma Rhei; Rhizoma Dioscoreae Bulbiferae; Olibanum (processed); Myrrha (processed); Rhizoma Corydalis (processed); Flos Carthami; Rhizoma Pinelliae (processed with ginger); Radix Codonopsis; Radix Astragali; Radix Acanthopanacis Senticosi; Fructus Amomi.

Procedure Decoct Flos Lonicerae Japonicae, Herba Taraxaci, Herba Scutellariae Barbatae, Herba Hedyotidis, Radix Sophorae Flavescentis, Herba Solani Nigri, Rhizoma Dioscoreae Bulbiferae, Radix Astragali and Radix Acanthopanacis Senticosi 3 times (2 hours, 1.5 hours and 1 hour respectively), filter, combine the filtrates and concentrate in vacuum to form a thin extract, Melt Olibanum and Myrrha by heat respectively and filter with coarse mesh gauze, combine the filtrates, and add to the above thin extract. Grind Calculus Bovis Artifactus and Margarita to very fine powder. Pulverize the other eleven ingredients to fine powder, and mix well with the above very fine powder and add to the thin extract. Stir well, dry, pulverize to fine powder, mix well, and pack into capsules.

Description Hard capsules containing brownish-yellow powder; odour, slight; taste, bitter, pungent, numb.

Identification (1) Microscopical: Pollen grains spheroidal or ellipsoidal, up to about 60 μm in diameter, extine with spinules and 3 germinal apertures. Sclerenchymatous cells of endotesta yellowish-brown or brownish-red, subpolygonal in surface view, walls thickened, containing silica body. Fragments of scales colourless, with rounded pits varying in size. Anastomosing laticiferous tubes 12-15 μm in diameter, containing fine granules.

(2) Add 20 ml of methanol to 4 g of the contents, macerate for 10 minutes and filter. Evaporate 10 ml of the filtrate to dryness, dissolve the residue in 10 ml of water, add 1 ml of hydrochloric acid, heat under reflux on a water bath for 30 minutes, and allow to cool immediately. Extract with 20 ml of ether two times by shaking, combine the ether extracts, evaporate to dryness, and dissolve the residue in 1 ml of chloroform as the test solution. Prepare a solution of 0.1 g of Radix et Rhizoma Rhei reference drug in the same manner as the reference drug solution. Carry out the method for thin layer chromatography (Appendix ⅥB), using silica gel G mixed with sodium carboxymethylcellulose as the coating substance and the upper layer of a mixture of petroleum ether (30-60℃), ethyl formate and formic acid (15 : 5 : 1) as the mobile phase. Apply separately 5 μl of each of the two solutions to the plate. After developing and removal of the plate, dry in air, and examine under ultraviolet light at 365 nm. The five orange fluorescent spots in the chromatogram obtained with the test solution correspond in position and colour to the spots in the chromatogram obtained with the reference drug solution. Expose to ammonia vapour, the colour of the spots turn red.

(3) Add 1 ml of concentrated ammonia TS and 20 ml of chloroform to 5 g of the contents, macerate for 1 hour while frequently shaking, filter and evaporate the filtrate to dryness. Dissolve the residue in 5 ml of ethanol as the test solution. Dissolve tetrahydropalmatine CRS in ethanol to prepare a solution containing 1 mg per ml as the reference solution. Carry out the method for thin layer chromatography (Appendix ⅥB), using silica gel G as the coating substance and a mixture of *n*-hexane, chloroform and methanol (10 : 6 : 1) as the mobile phase. Apply separately 20 μl of the test solution, 1 μl of the reference solution to the plate. After developing and removal of the plate, dry in air and expose the plate to iodine vapour to the spots clear. After expelling the iodine, examine under ultraviolet light at 365 nm. The fluorescent spot in the chromatogram obtained with the test solution corresponds in position and colour to the spot in the chromatogram obtained with the reference solution.

(4) Add 25 ml of chloroform to 3 g of the content, heat under reflux for 5 hours and filter. Add 0.3 g of active charcoal to the filtrate, shake, stand for 30 minutes, filter, and evaporate the filtrate to dryness. Dissolve the residue in 1 ml of chloroform as the test solution. Dissolve resibufogenin CRS in chloroform to prepare a solution containing 2 mg per ml as the reference solution. Carry out the method for thin layer chromatography (Appendix ⅥB), using silica gel G as the coating substance and a mixture of cyclohexane, chloroform and acetone (4 : 3 : 3) as the mobile phase. Apply separately 10 μl of the test solution and 2 μl of the reference solution to the plate. After developing and removal of the plate, dry in air and spray with a 10% sulfuric acid in ethanol, heat at 105℃ to the spots clear, and examine under ultraviolet light at 365 nm. The fluorescent spot in the chromatogram obtained with the test solution corresponds in position and colour to the spot in the chromatogram obtained with the reference solution.

Other requirements Comply with the general requirements for capsules (Appendix ⅠL).

Assay Carry out the method of high performance liquid

chromatography (Appendix Ⅵ D).

Chromatographic system and system suitability Use the octadecylsilane bonded silica gel as the stationary phase and a mixture of acetonitrile, methanol, phosphate BS (pH = 6.8) and triethylamine (18 : 18 : 70 : 0.1) as the mobile phase. As detector a spectrophotometer set at 220 nm, the number of theoretical plates of the column is not less than 8000, calculated with the reference to the peak of matrine.

Reference solution Weigh accurately a quantity of matrine CRS, dissolve in methanol to prepare a solution containing 60 μg per ml as the reference solution.

Test solution Grind well the content, obtained under the test of weight variation, weigh accurately 0.5 g in a stopper conical flask, moisten with concentrated ammonia TS and add 25 ml of chloroform, ultrasonicate (power, 250 W; frequency, 33 kHz) for 20 minutes, filter. Wash the residue, vessel, and filter funnel with four 5-ml quantities of chloroform, and filter. Combine the filtrates, evaporate to dryness on a water bath, dissolve the residue in methanol and transfer to a 10 ml volumetric flask. Dilute with methanol to volume, mix well, and filter. Use the successive filtrate as the test solution.

Procedure Inject accurately 10 μl of each of the reference solution and the test solution into the column, respectively, and calculate the content.

It contains not less than 0.16 mg of matrine ($C_{15}H_{24}N_2O$) per capsule, referred to Radix Sophorae Flavescentis.

Action To clear *heat* and *toxicity*, reduce swelling and kill pain, and replenish *qi* and resolve phlegm.

Indications Late gastric cancer, carcinoma of esophagus due to accumulation of *phlegm-dampness* and stagnation of blood and *qi*.

Usage and dosage 3 capsules, 3 times a day, taken with warm boiled water after meals, or follow doctor's advice, 42 days making one course of treatment.

Precaution It is forbidden to prescribe to pregnant women. Nausea and poor appetite may be seen in a few patients at the initial stage, but they will have spontaneous remission. Overdosage may cause nausea and poor appetite in a few patients.

Strength 0.3 g per capsule

Storage Preserve in tightly closed containers.

Jinsang Liyan Wan
(金嗓利咽丸)

Jinsang Liyan Pills

Ingredients Poria 50 g; Rhizoma Pinelliae Praeparata 50 g; Fructus Aurantii Immaturus (stir-baked) 50 g; Pericarpium Citri Reticulatae Viride (stir-baked) 50 g; Arisaema cum Bile 50 g; Exocarpium Citri Rubrum 50 g; Fructus Amomi 50 g; Fructus Amomi Rotundus 25 g; Semen Arecae 50 g; Cortex Albiziae 50 g; Massa Medicata Fermentata stir-baked 50 g; Caulis Perillae 50 g; Rhizoma Zingiberis Recens 7.5 g; Periostracum Cicadae 50 g; Semen Oroxyli 50 g; Cortex Magnoliae Officinalis (processed) 50 g.

Procedure Pulverize the above ingredients to fine powder, sift and mix well. To each 100 g of the powder, add 35-50 g of refined honey and a quantity of water to make water-honeyed pills and dry; or add 150-170 g of refined honey to make big honeyed pills.

Description Brownish-black water-honeyed pills or big honeyed pills; odour, slightly; taste, sweet and slightly bitter.

Identification (1) Microscopical: Irregular branched masses colourless, dissolved in chloral hydrate TS, hyphae colourless or pale brown, 4-6 μm in diameter. Fibre bundles surrounded by parenchymatous cells containing prisms of calcium oxalate, forming crystal fibres. Raphides of calcium oxalate, 32-144 μm long, occurring in mucilage cell or scatted. Sclerenchymatous cells of endotesta yellowish-brown or brownish-red, subpolygonal in surface view, walls thickened, lumina containing silica bodies. Fragments of chitin shell yellowish-brown, translucent, densely covered with papillose or short-spiny protrudings.

(2) Grind well 20 g of water-honeyed pills, or triturate well 30 g of big honeyed pills, cut into pieces, with 6 g of kieselguhr. Add 2 ml of concentrated ammonia TS and 50 ml of chloroform, ultrasonicate for 30 minutes, filter, and extract the filtrate with 30 ml of 2% solution of hydrochloric acid by shaking. Adjust the extract to pH 8-9 with concentrated ammonia TS, extract with 40 ml of chloroform two times by shaking, combine the extracts and evaporate to dryness. Dissolve the residue in 1 ml of chloroform as the test solution. Prepare a solution of 0.5 g of Semen Arecae reference drug and 30 ml of cholorform and 1 ml of concentrated ammonia TS in the same manner as the reference drug solution. Carry out the method for thin layer chromatography (Appendix Ⅵ B), using silica gel G as the coating substance and a mixture of chloroform and methanol (9 : 1) as the mobile phase. Apply separately 20 μl of the test solution and 5 μl of the reference drug solution to the plate. After developing and removal of the plate, dry in air, spray with dilute potassium iodobismuthate TS. The spots in the chromatogram obtained with the test solution correspond in position and colour to the spots in the chromatogram obtained with the reference drug solution.

(3) Grind well 10 g of water-honeyed pills, or triturate well 15 g of big honeyed pills, cut into pieces, with 7.5 g of kieselguhr, ultrasonicate with 30 ml of methanol for 30 minutes, filter, and evaporate the filtrate to dryness. Dissolve the residue in 40 ml of dilute hydrochloric acid, extract with three 20-ml quantities of chloroform by shaking. Combine the chloroform extracts, and extract with three 20-ml quantities of 2% sodium hydroxide solution by shaking. Combine the extracts, adjust to pH 1-2 with hydrochloric acid, and extract with three 20-ml quantities of chloroform by shaking. Combine the chloroform extracts, wash with a quantity of water, dehydrate with anhydrous sodium sulfate, evaporate to dryness, and dissolve the residue in 5 ml of methanol as the test solution. Dissolve magnolol CRS and honokiol CRS respectively in methanol to prepare two solutions, one containing 2 mg of magnolol per ml and another containing 1 mg of honokiol per ml as the reference solutions. Carry out the method for thin layer chromatography (Appendix Ⅵ B), using silica gel GF_{254} as the coating substance and a mixture of petroleum ether (60-90℃), ethyl acetate and formic acid (85 : 15 : 2) as the mobile phase. Apply separately 5 μl of each of the three solutions to the plate. After developing and removal of the plate, dry in air, examine under ultraviolet light at 254 nm. The spots in the chromatogram obtained with the test solution correspond in position and colour to the spots in the chromatogram obtained with the reference solutions. Spray with 5% vanillin in sulfuric acid, and heat to the spots clear. The spots in the chromatogram obtained with the test solution correspond in position and colour to the spots in the chromatogram obtained with the reference solutions.

Other requirements Comply with the general requirements for pills (Appendix Ⅰ A).

Assay Carry out the method for high performance liquid

chromatography (Appendix Ⅵ D).

Chromatographic system and system suitability Use octadecylsilane bonded silica gel as the stationary phase and a mixture of methanol and water (78 : 22) as the mobile phase. As detector a spectrophotometer set at 291 nm. The number of theoretical plates of the column is not less than 4000, calculated with the reference to the peak of magnolol.

Reference solution Dissolve separately a quantity of magnolol CRS and honokiol CRS, accurately weighed, in methanol to prepare solutions, one containing 50 μg of magnolol per ml and another containing 30 μg of honokiol per ml as the reference solutions, respectively.

Test solution Grind 8 g of water-honeyed pills to fine powder, weigh accurately 1.5 g, or cut the big honeyed pills, obtained under the test of weight variation, into pieces, weigh accurately 2.2 g, in a stopper conical flask, add accurately 25 ml of methanol, stopper tightly, and weigh. Ultrasonicate (power, 250 W; frequency, 40 kHz) for 30 minutes, cool, weigh again, replenish the loss of the weight with methanol, and mix well. Filter and use the successive filtrate as the test solution.

Procedure Inject accurately 10 μl of each of the reference solutions and the test solution into the column, respectively, and calculate the content.

It contains not less than 0.80 mg of the total amount of magnolol ($C_{18}H_{18}O_2$) and honokiol ($C_{18}H_{18}O_2$) per gram for the water-honeyed pills, and 3.6 mg per big honeyed pill, referred to Cortex Magnoliae officinalis.

Action To soothe the liver to regulate *qi* flow, and resolve phlegm to relieve sore throat.

Indications Feeling a foreign body and discomfort in the throat with hoarseness; hypertrophy of the vocal cord with above symptoms.

Usage and dosage 60-120 water-honeyed pills or 1-2 big honeyed pills, twice a day.

Strength 1 g per 10 water-honeyed pills; 9 g per big honeyed pill

Storage Preserve in tightly closed containers.

Jinsang Sanjie Wan (金嗓散结丸)

Jinsang Sanjie Pills

Ingredients Lasiosphaera seu Calvatia 25 g; Rhizoma Curcumae (stir-baked with vinegar) 50 g; Flos Lonicerae Japonicae 125 g; Semen Persicae (rinsed in boiling water) 50 g; Radix Scrophulariae 125 g; Rhizoma Sparganii (baked with vinegar) 50 g; Flos Carthami 50 g; Radix et Rhizoma Salviae Miltiorrhizae 75 g; Radix Isatidis 125 g; Radix Ophiopogonis 100 g; Bulbus Fritillariae Thunbergii 75 g; Rhizoma Alismatis 75 g; Endothelium Corneum Gigeriae Galli (stir-baked) 50 g; Periostracum Cicadae 75 g; Semen Oroxyli 75 g; Herba Taraxaci 125 g.

Procedure Pulverize the above 16 ingredients to fine powder, sift and mix well. To each 100 g of the powder add 35-50 g of refined honey and a quantity of water to make water-honeyed pills and dry; alternatively, add 110-130 g of refined honey to make big honeyed pills.

Description Brownish-black water-honeyed pills or big honeyed pills; odour, slight; taste, sweet and slightly bitter.

Identification (1) Microscopical: Hyphae brown, branched, 2-6 μm in diameter. Spores globular, 3.5-5.5 μm in diameter. Head of glandular hairs obverse conical, multicellular; petiole multicellular. Laticiferous vessels brownish-yellow, reticulated branched. Parenchyma grayish-brown to black-brown, cells mostly shrunken, and each containing a nucleus-like mass. Corolla pieces yellow, with reddish-brown or yellowish-brown long-tubular secretory cells. Needles of calcium oxalate in bundles or scattered, 24-50 μm long, 3 μm in diameter. Pieces of chitinous cutis and shell pale yellowish-brown, translucent, densely covered with corpora or short spiny mastoids. Starch granules ovoid, 35-48 μm in diameter, hilum punctiform, V-shaped or U-shaped, situating at the small end, with fine and dense striations.

(2) Grind 10 g of water-honeyed pills or cut 15 g of big honeyed pills to pieces, triturate well with 8 g of kieselgur. Ultrasonicate with 80 ml of water for 20 minutes, filter. To the filtrate add 2 ml of hydrochloric acid, keep slightly boiling for 5 minutes, and filter. Extract the filtrate with three 20-ml quantities of chloroform, combine the extracts, evaporate to dryness, and dissolve the residue in 1 ml of chloroform as the test solution. Prepare a solution of 0.5 g of Radix Ophiopogonis reference drug in the same manner as the reference drug solution. Carry out the method for thin layer chromatography (Appendix Ⅵ B), using silica gel G as the coating substance and a mixture of chloroform and acetone (4 : 1) as the mobile phase. Apply separately 5 μl of each of the two solutions to the plate. After developing and removal of the plate, dry in air, spray with 10% sulfuric acid in ethanol, heat at 105℃ to the spots clear. The spots in chromatogram obtained with the test solution correspond in position and colour to the spots in the chromatogram obtained with the reference drug solution.

(3) Grind 10 g of water-honeyed pills or cut 15 g of big honeyed pills into pieces, triturate well with 8 g of kieselgur. Ultrasonicate with 40 ml of methanol for 20 minutes, filter, and evaporate the filtrate to dryness. Dissolve the residue in 20 ml of water, adjust with hydrochloric acid to pH 2, extract with two 20-ml quantities of ethyl acetate, combine the extracts, evaporate to dryness, and dissolve the residue in 1 ml of methanol as the test solution. Dissolve baicalin CRS in methanol to prepare a solution containing 1 mg per ml as the reference solution. Carry out the method for thin layer chromatography (Appendix Ⅵ B), using silica gel G as the coating substance and a mixture of ethyl acetate, butanone, formic acid and water (5 : 3 : 1 : 1) as the mobile phase. Apply separately to the plate 10 μl of the two solutions. After developing and removal of the plate, dry in air, spray with 1% ferric chloride in ethanol. The spot in chromatogram obtained with the test solution corresponds in position and colour to the spot in the chromatogram obtained with the reference solution.

Other requirements Comply with the general requirements for pills (Appendix Ⅰ A).

Assay Carry out the method for high performance liquid chromatography (Appendix Ⅵ D).

Chromatographic system and system suitability Use octadecasilane bonded silica gel as the stationary phase and a mixture of acetonitrile and 0.4% solution of phosphoric acid (13 : 87) as the mobile phase. As detector a spectrophotometer set at 330 nm. The number of theoretical plates of the column is not less than 1000, calculated with the reference to the peak of chlorogenic acid.

Reference solution Weight accurately a quantity of chlorogenic acid CRS in an amber volumetric flask, dissolve in methanol to prepare a solution containing 60 μg per ml as the reference solution.

Test solution Grind water-honeyed pills to fine powder,

weigh accurately 1 g, or cut big honeyed pills, obtained in the test of weight variation, into pieces, weigh accurately 1.7 g, in a stopper conical flask, add accurately 25 ml of 50% methanol, stopper tightly, and weigh. Ultrasonicate (power, 250 W; frequency, 40 kHz) for 30 minutes, cool, weigh again, replenish the loss of weight with 50% methanol, mix well, filter, and use the successive filtrate as the test solution.

Procedure Inject accurately 10 μl of each of the reference solution and the test solution into the column, respectively, and calculate the content.

It contains not less than 0.80 mg of chlorogenic acid ($C_{16}H_{18}O_9$) per gram of water-honeyed pills, 4.5 mg per big honeyed pill, referred to Flos Lonicerae Japonicae.

Action To clear *heat* and *toxicity*, promote blood circulation to resolve blood stasis, and drain *dampness* and resolve *phlegm*.

Indications Hoarseness, hyperemia and tumefaction of the vocal cord due to *heat* accumulation in the interior and stagnation of blood and *qi*; chronic laryngitis, vocal nodules and polyp of the vocal cord with above symptoms.

Usage and dosage 60-120 of water-honeyed pills, 1-2 of big honeyed pills, twice a day.

Strength 1.0 g per 10 water-honeyed pills, 9 g per big honeyed pill

Storage Preserve in tightly closed containers.

Jinshuibao Jiaonang (金水宝胶囊)

Jinshuibao Capsules

Jinshuibao Capsules are prepared from the Fermentative powder from Cordyceps sinensin (Cs-4).

Procedure Pulverize 330 g of the fermentative powder to fine powder, pack to make 1000 capsules.

Description Capsules containing yellowish-brown to pale brown powder; odour, aromatic; taste, slightly bitter.

Identification (1) Evaporate 15 ml of the test solution, obtained from Assay, to dryness, dissolve the residue in 5 ml of dilute ethanol as the test solution. Dissolve a quantity of adenine CRS, adenosine CRS and uridine CRS in dilute ethanol TS to prepare a mixture containing 2 mg of each per ml as the reference solution. Carry out the method for thin layer chromatography (Appendix Ⅵ B), using silica gel GF_{254} mixed with sodium carboxymethylcellulose containing 4% solution of disodium hydrogen phosphate as the coating substance and a mixture of chloroform, ethyl acetate, isopropanol, water and concentrated ammonia TS (8 : 2 : 6 : 0.3 : 0.2) as the mobile phase. Apply separately 10 μl of the test solution and 1 μl of the reference solution to the plate. After developing and removal of the plate, dry in air. Examine under ultraviolet light at 254 nm. The spot in the chromatogram obtained with the test solution corresponds in position and colour to the spots in the chromatogram obtained with the reference solution.

(2) Add 10 ml of water to 1 g of the content, heat to boil, filter, and use the filtrate as the test solution. Dissolve a quantity of L-leucine CRS, DL-aminopropionic acid CRS and valine CRS in water to prepare a mixture containing 1 mg of each of L-leucine and DL-aminopropionic acid and 0.5 mg of valine per ml as the reference solution. Carry out the method for thin layer chromatography (Appendix Ⅵ B), using silica gel G mixed with sodium carboxymethylcellulose as the coating substance and a mixture of butanol, glacial acetic acid and water (4 : 1 : 1) as the mobile phase. Apply separately 3 μl of the test solution and 2 μl of the reference solution to the plate. After developing and removal of the plate, dry in air. Spray with ninhydrin TS, and heat to the spots clear. The spots in the chromatogram obtained with the test solution correspond in position and colour to the spots in the chromatogram obtained with the reference solution.

(3) Dissolve mannitol CRS in dilute ethanol to prepare a solution containing 9 mg per ml as the reference solution. Carry out the method of thin layer chromatography (Appendix Ⅵ B), using silica gel G as the coating substance and a mixture of isopropanol, ethyl acetate and water (9 : 6 : 2) as the mobile phase. Apply separately 3 μl of the test solution obtained on Identification (1) and 2 μl of the reference solution to the plate. After developing and removal of the plate, dry in air. Spray with anisaldehyde TS, and heat at 130℃ to the spot clear. The spot in the chromatogram obtained with the test solution corresponds in position and colour to the spot in the chromatogram obtained with the reference solution.

Other requirements Comply with the general requirements for capsules (Appendix Ⅰ L).

Assay Carry out the method for high performance liquid chromatography (Appendix Ⅵ D).

Chromatographic system and system suitability Use octadecylsilane bonded silica gel as the stationary phase and phosphate BS [a mixture of 0.066 mol/L potassium dihydrogen phosphate solution and 0.06 mol/L disodium hydrogen phosphate solution (2 : 3)] containing 2% tetrahydrofuran as the mobile phase. As detector a spectrophotometer set at 260 nm. The number of theoretical plates of the column is not less than 3000, calculated with reference to the peak of adenosine

Reference solution To 10 mg of adenosine CRS, weigh accurately, transfer to a 25 ml of volumetric flask and add dilute ethanol TS to the volume; mix thoroughly. Transfer accurately 2 ml of the ethanol solution to a 100 ml of volumetric flask, dilute with the mobile phase to the volume, mix thoroughly, to prepare a solution containing adenosine 8 μg per ml.

Test solution Mix thoroughly the contents obtained under the test of weight variation, weigh accurately 1 g of the mixture, place to a stopper conical flask, add accurately 50 ml of dilute ethanol and stopper tightly. Ultrasonicate (power, 250 W; frequency, 33 kHz) for 30 minutes; allow to stand to cool and weigh again; replenish the loss of the weight with dilute ethanol, and mix thoroughly. Filter, measure accurately 1 ml of the successive filtrate to a 5 ml volumetric flask, dilute with mobile phase to the volume and mix thoroughly.

Procedure Inject accurately 20 μl of each of the reference solution and the test solution into the column, and calculate the content.

It contains not less than 0.70 mg and not more than 1.20 mg of adenosine ($C_{10}H_{13}N_5O_4$) per capsule.

Action To reinforce the lung and kidney, astringe essence and replenish *qi*.

Indications Chronic cough and dyspnea in a deficiency syndrome, lassitude, insomnia and amnesia, aching and weakness in the lower back and knees, menstrual disorders, impotence and premature ejaculation due to deficiency in the lung and kidney and insufficient essence; chronic bronchitis, chronic kidney insufficiency, hyperlipemia and cirrhosis with above symptoms.

Usage and dosage 3 capsules, 3 times a day; for the

patients with chronic impairment of renal function, 6 capsules, 3 times a day.

Strength 0.33 g per capsule

Storage Preserve in tightly closed containers.

Jinshuibao Pian (金水宝片)

Jinshuibao Tablets

Jinshuibao Tablets are the film coated tablets prepared from Fermentation Cordyceps Powder (Cs-4).

Procedure Mix thoroughly 500 g of fermentation cordyceps powder (Cs-4) with a quantitie of adjuvant, make granules, dry, compress into 1000 tablets, and coat with film.

Description Film coated tablets with pale brown to brown colour core; taste slightly bitter.

Identification (1) Evaporate 9 ml of the successive filtrate obtained under Assay to dryness, dissolve the residue with 5 ml of ethanol as the test solution. Dissolve a quantity of adenine CRS, adenosine CRS and uridine CRS with dilute ethanol TS to prepare a mixture containing 1 mg of each per ml as the reference solution. Carry out the method for thin layer chromatography (Appendix Ⅵ B), using silica gel GF_{254} plate prepared with 4% solution of disodium hydrogen phosphate and sodium carboxymethylcellulose as binder, and a mixture of chloroform, ethyl acetate, isopropanol, water and concentrated ammonia TS (8 : 2 : 6 : 0.3 : 0.2) as the mobile phase. Apply separately 10 μl of the test solution and 1 μl of the reference solution to the plate. After developing and removal of the plate, dry in air and examine under ultraviolet light at 254 nm. The spots in the chromatogram obtained with the test solution correspond in position and colour to the spots in the chromatogram obtained with the reference solution.

(2) Pulverize 2 tablets, removed coats, to fine powder, heat with water to boiling, filter, and use the filtrate as the test solution. Dissolve a quantity of L-leucine CRS, DL-aminopropionic acid CRS and valine CRS with water to prepare a mixture containing 1 mg of each of leucine and DL-aminopropionic acid, and 0.5 mg of valine per ml as the reference solution. Carry out the method for thin layer chromatography (Appendix Ⅵ B), using silica gel G containing sodium carboxymethylcellulose as coating substances and a mixture of *n*-butanol, glacial acetic acid and water (4 : 1 : 1) as the mobile phase. Apply separately 3 μl of the test solution and 2 μl of the reference solution to the plate. After developing and removal of the plate, dry in air, spray with ninhydrin TS and heat to spots clear. The spots in the chromatogram obtained with the test solution correspond in position and colour to the spots in the chromatogram obtained with the reference solution.

(3) Dissolve mannitol CRS with dilute ethanol to prepare a mixture containing 9 mg per ml as the reference solution. Carry out the method for thin layer chromatography (Appendix Ⅵ B), using silica gel G as coating substances and a mixture of ethyl acetate, isopropanol and water (6 : 9 : 2) as the mobile phase. Apply separately 3 μl of the test solution obtained under Identification (1) and 2 μl of the above reference solution to the plate. After developing and removal of the plate, dry in air, spray with anisaldehyde TS and heat at 130℃ to spot clear. The spot in the chromatogram obtained with the test solution corresponds in position and colour to the spot in the chromatogram obtained with the reference solution.

Other requirements Comply with requirements for tablets (Appendix Ⅰ D).

Assay Carry out the method for high performance liquid chromatography (Appendix Ⅵ D).

Chromatographic system and system suitability Use octadecylsilane bonded silica gel as the stationary phase and phosphate BS [0.066 mol/L solution of potassium dihydrogen phosphate and 0.066 mol/L solution of dipotassium hydrogen phosphate (2 : 3)] containing 2% tetrahydrofuran as the mobile phase. As detector a spectrophotometer set at 260 nm. The number of theoretical plates of the column is not less than 2500, calculated with the reference to the peak of adenosine.

Reference solution Weigh accurately 10 mg of adenosine CRS in a 25 ml volumetric flask, dissolve and dilute with dilute ethanol to volume, and mix well. Measure accurately 2 ml in a 100 ml volumetric flask, dilute with the mobile phase to volume, and mix well (containing 8 μg of adenosine per ml).

Test solution Pulverize 20 tablets, removed coats and weighed accurately, to fine powder, weigh accurately 1 g in a stopper conical flask, add accurately 20 ml of dilute ethanol TS, and weigh. Ultrasonicate (power, 250 W; frequency, 33 kHz) for 30 minutes, stand to cool, weigh again, replenish the lost weight with dilute ethanol, and mix well. Filter, measure accurately 1 ml of the filtrate (the other successive filtrate for identification use) in a 10 ml volumetric flask, dilute with the mobile phase to volume, and mix well.

Procedure Inject accurately 20 μl of each of the reference solution and the test solution into the column, and calculate the content.

It contains not less than 1.0 mg and not more than 1.8 mg of adenosine ($C_{10}H_{13}N_5O_4$) per tablet.

Action To reinforce the lung and kidney, astringe essence and replenish *qi*.

Indications Chronic cough and dyspnea in a deficiency syndrome, lassitude, insomnia and amnesia, aching and weakness in the lower back and knees, menstrual disorders, impotence and premature ejaculation due to deficiency in the lung and kidney and insufficient essence; chronic bronchitis, chronic renal insufficiency, hyperlipemia and cirrhosis with above symptoms.

Usage and dosage 2 tablets, 3 times a day; 4 tablets, 3 times a day for the patients with chronic renal insufficiency; or follow doctor's advice.

Strength 0.75 g per tablet

storage Preserve in tightly closed container.

Jisheng Shenqi Wan (济生肾气丸)

Jisheng Shenqi Pills

Ingredients Radix Rehmanniae Praeparata 160 g; Fructus Corni (processed) 80 g; Cortex Moutan 60 g; Rhizoma Dioscoreae 80 g; Poria 120 g; Rhizoma Alismatis 60 g; Cortex Cinnamomi 20 g; Radix Aconiti Lateralis Praeparata 20 g; Radix Achyranthis Bidentatae 40 g; Semen Plantaginis 40 g.

Procedure Pulverize the above ten ingredients to fine powder, sift, mix well. To each 100 g of powder add 35-50

g of refined honey and a quantity of water to make water-honeyed pills and dry. Alternatively, add 90-110 g of refined honey to make small honeyed pills or big honeyed pills.

Description Brown to blackish-brown water-honeyed pills, small honeyed pills or big honeyed pills; taste, sour, slightly sweet and bitter.

Identification (1) Microscopical: Gelatinized masses of starch granules whitish. Irregular branched masses colourless, dissolved in chloral hydrate TS; hyphae colourless or pale brown, 4-6 μm in diameter. Parenchyma greyish-brown to blackish-brown, cells mostly shrunken, and each containing a brown nucleus-like mass. Parenchymatous cells subrounded, with elliptic pits, gathered into pit groups. Anticlinal walls of endopleura cells sinuous, thicken and lignified, with thin and minute pit-canals. Sand crystals of calcium oxalate occurring in parenchymatous cells. Raphides of calcium oxalate occurring in mucilage cells, 80-240 μm long, needle crystals 2-8 μm in diameter. Epidermal cells of pericarp orange yellow, polygonal in surface view, with anticlinal walls slightly beaded and thickened. Hypodermis of testa narrow and long in surface view, walls slightly sinuous, with several cells in a group arranged slightly mosaic. Stone cells subrounded or subrectangle, with walls thin on one side. Cork cells pink to pale purple, walls slightly thickened.
(2) Triturate 6 g of water-honeyed pills; or cut 9 g of small honeyed pills or big honeyed pills into pieces, heat under reflux with 50 ml of ether for 2 hours, filter and expel ether from the filtrate. Dissolve the residue in 1 ml of ether as the test solution. Dissolve a quantity of paeonol CRS in ether to prepare a solution containing 1 mg per ml as the reference solution. Carry out the method for thin layer chromatography (Appendix Ⅵ B), using silica gel G as the coating substance, and a mixture of cyclohexane and ethyl acetate (3 : 1) as the mobile phase. Apply separately 5 μl of each of the two solutions to the plate. After developing and removal of the plate, dry in air. Spray with 5% ferric chloride in ethanol. The spot in the chromatogram obtained with test solution corresponds in position and colour to the spot in the chromatogram obtained with the reference solution.
(3) Dissolve a quantity of ursolic acid CRS in ethanol to prepare a solution containing 1 mg per ml as the reference solution. Carry out the method for thin layer chromatography (Appendix Ⅵ B), using silica gel H mixed with sodium carboxymethylcellulose as the coating substance, and a mixture of cyclohexane, chloroform and ethyl acetate (20 : 5 : 8) as the mobile phase. Apply separately 5 μl of the test solution, obtained under the Identification (2), and 2 μl of the reference solution to the plate. After developing and removal of the plate, dry in air. Spray with 10% sulfuric acid in ethanol, heat at 80℃ to the spots clear. The spot in the chromatogram obtained with test solution corresponds in position and colour to the spot in the chromatogram obtained with the reference solution.

Other requirements Comply with the general requirements for pills (Appendix Ⅰ A).

Action To warm the kidney to move *qi*, and induce urination to eliminate edema.

Indications Edema caused by deficiency in the kidney, aching and heaviness of the lower back and knees, dysuria, coughing and dyspnea caused by *phlegm* and morbid fluid from insufficient *kidney-yang* and accumulation of *dampness*.

Usage and dosage 6 g of water-honeyed pills, 9 g of small honeyed pills or 1 big honeyed pill, 2-3 times a day.

Strength 9 g per big honeyed pill

Storage Preserve in tightly closed containers.

Jiufen San
(九分散)

Jiufen Powder

Ingredients Semen Strychni Pulveratum (processed) 250 g; Herba Ephedrae 250 g; Olibanum (processed) 250 g; Myrrha (processed) 250 g.

Procedure Pulverize Herba Ephedrae, Olibanum and Myrrha to fine powder, triturate with Semen Strychni Pulveratum, sift and mix well.

Description A yellowish-brown to dark yellowish-brown powder, sticky to masses by warming or pressing; odour, slightly aromatic; taste, slightly bitter.

Identification (1) Microscopical: Unicellular non-glandular hairs mostly broken, fibre-like, with swollen bases like stone cells. Stomata characteristic, guard cells dumbbell-shaped in lateral view, fibres attached with fine crystals. Irregular masses pale yellow or yellowish-brown, aggregated by colourless or pale yellow oil droplets and minute granules, the oil droplets stained red on adding Sudan Ⅲ TS. Irregular pieces pale yellow with holes containing yellowish oil droplets, which stained red on adding Sudan Ⅲ TS.
(2) Dissolve separately a quantity of strychnine CRS and brucine CRS in chloroform to prepare two solutions each containing 0.4 mg per ml as the reference solution (1) and the reference solution (2). Dissolve a quantity of ephedrine hydrochloride CRS in methanol to prepare a solution containing 0.4 mg per ml as the reference solution (3). Carry out the method for thin layer chromatography (Appendix Ⅵ B), using silica gel G mixed with 0.2 mol/L of solution sodium hydroxide as the coating substance and a mixture of chloroform, ethanol and cyclohexane (3 : 1 : 1) as the mobile phase. Apply separately 10 μl of the test solution obtained under Assay and 10 μl of each of the reference solutions (1), (2) and (3) to the plate. After developing and removal of the plate, dry in air. Spray with ninhydrin TS and heat at 105℃ for 10 minutes. The spot due to ephedrine in the chromatogram obtained with the test solution corresponds in position and colour to the spot in the chromatogram obtained with the reference solution (3). Then spray with dilute potassium iodobismuthate TS, the spots due to strychnine and brucine in the chromatogram obtained with the test solution correspond in position and colour to the spots in the chromatogram obtained with the reference solutions (1) and (2) respectively.

Weight variation Limit within ±3.0 per cent (Appendix Ⅰ B).

Other requirements Comply with the general requirements for powders (Appendix Ⅰ B).

Assay Weigh accurately 2 g of the powder, obtained under the test of variation weight, in a stopper conical flask, add accurately 20 ml of chloroform and 1 ml of concentrated ammonia TS, shake gently and weigh. Allow it to stand at room temperature for 24 hours, weigh again, replenish the loss of weight with chloroform, shake thoroughly and filter. Measure accurately 10 ml of the successive filtrate, extract with sulfuric acid solution (3→300) in portions until the alkaloids are exhausted. Combine the sulfuric acid solutions and transfer to another separating funnel, adjust to alkaline with concentrated ammonia TS and extract with chloroform in portions. Combine the chloroform extracts, evaporate to dryness and cool. Dissolve the residue accurately in 5 ml of

chloroform as the test solution. Dissolve a quantity of strychnine CRS, weighed accurately, in chloroform to prepare a solution containing 0.4 mg per ml as the reference solution. Carry out the method for thin layer chromatography (Appendix Ⅵ B), using silica gel GF_{254} as the coating substance and a mixture of toluene, acetone, ethanol and concentrated ammonia TS (16 : 12 : 1 : 4) as the mobile phase. Apply accurately to the plate 5 μl of each of the two solutions. After developing and removal of the plate, dry in air. Carry out the method for thin layer chromatography (Appendix Ⅵ B thin layer chromatographic scanning method) at wavelength $\lambda_S = 254$ nm; $\lambda_R = 325$ nm. Measure the integration values of the absorbance from the test solution and the reference solution, respectively, and calculate the content.

It contains not less than 4.5 mg and not more than 5.5 mg of strychnine ($C_{21}H_{22}N_2O_2$) per pack, referred to Semen Strychni Pulveratum, caculate with reference to dried drug.

Action To promote blood circulation to dissipate blood stasis, and reduce swelling to kill pain.

Indications Injuries from fall or stumble and bruise.

Usage and dosage 2.5 g, once a day after meals; appropriate quantity mixed with wine, applied to the lesion.

Precaution Overdosage should be avoided because of its toxicity, Contraindicated for pregnant women; follow doctor's order for children or debilitated persons; contraindicated for tetanus patients with bleeding.

Strength 2.5 g per pack

Storage Preserve in tightly closed containers, protected from heat and moisture.

Jiuqi Niantong Wan
(九气拈痛丸)

Jiuqi Niantong Pills

Ingredients Rhizoma Cyperi (processed with vinegar) 138 g; Radix Aucklandiae 34.5 g; Rhizoma Alpiniae Officinari 34.5 g; Pericarpium Citri Reticulatae 69 g; Radix Curcumae 69 g; Rhizoma Curcumae (processed with vinegar) 276 g; Rhizoma Corydalis (processed with vinegar) 138 g; Semen Arecae 69 g; Radix et Rhizoma Glycyrrhizae 34.5 g; Faeces Trogopterori (stir-baked with vinegar) 138 g.

Procedure Pulverize the above ten ingredients to fine powder, sift and mix well. Make pills with water and dry.

Description Yellowish-brown to brown watered pills; odour, aromatic; taste, bitter and pungent.

Identification (1) Microscopical: Fragments of sclerenchyma greenish-yellow, cells subpolygonal or slightly elongated, walls slightly sinuous, sometimes beaded, with fine and dense pits. Wood fibres bundles long fusiform, 16-24 μm in diameter, walls slightly thickened, with cleft, crossed or V-shaped pits. Fibre bundles surrounded with parenchymatous cells containing prisms of calcium oxalate, forming crystal fibres. Secretory cells subrounded, containing pale yellowish-brown to reddish-brown secretion, the surrounded cells stellate arranged. Prisms of calcium oxalate abundant in parenchyma. Fragments of endosperm colourless, with relatively thickened walls and large subrounded pits.

(2) Triturate 5 g of pills to fine powder, add 1 ml of concentrated ammonia TS and 20 ml of chloroform, macerate for 1 hour with constant shaking, filter and evaporate the filtrate to dryness. Dissolve the residue in 1 ml of ethanol, filter, and use the filtrate as the test solution. Dissolve a quantity of tetrahydropalmatine CRS in ethanol to prepare a solution containing 1 mg per ml as the reference solution. Carry out the method for thin layer chromatography (Appendix Ⅵ B), using silica gel G as the coating substance and a mixture of *n*-hexane, chloroform and methanol (10 : 6 : 1) as the mobile phase. Apply separately 4 μl of the test solution and 1 μl of the reference solution to the plate. After developing and removal of the plate, dry in air, expose to iodine vapour for a few seconds. Examine under ultraviolet light at 365 nm. The fluorescent spot in the chromatogram obtained with the test solution corresponds in position and colour to the spot in the chromatogram obtained with the reference solution.

(3) Triturate 10 g of pills to fine powder, add 20 ml of ether and mix thoroughly. Allow to stand overnight, filter, expel the filtrate to dryness and dissolve the residue in 1 ml of ethanol as the test solution. Prepare a solution of 0.2 g Rhizoma Cyperi reference drug and 20 ml of ether in the same manner as the reference drug solution. Carry out the method for thin layer chromatography (Appendix Ⅵ B), using silica gel GF_{254} as the coating substance and a mixture of toluene and ethyl acetate (9 : 1) as the mobile phase. Apply separately 10 μl of each of the above two kinds of solutions to the plate. After developing and removal of the plate, dry in air. Examine under ultraviolet light at 254 nm. The spots in the chromatogram.obtained with the test solution corresponds in position and colour to the spots in the chromatogram obtained with the reference drug solution.

(4) Ultrasonicate 0.5 g of Radix Aucklandiae with 10 ml of ether for 15 minutes, filter; expel the filtrate to dryness and dissolve the residue in 1 ml of ethanol as the reference drug solution. Carry out the method for thin layer chromatography (Appendix Ⅵ B), using silica gel G as the coating substance and a mixture of chloroform and cyclohexane (5 : 1) as the mobile phase. Apply separately 5 μl of the test solution, obtained under Identification (3), and 2 μl of the reference drug solution to the plate. After developing and removal of the plate, dry in air. Spray with 1% vanillin in sulfuric acid and heat at 105℃ to the spots clear. The spot in the chromatogram obtained with the test solution corresponds in position and colour to the spot in the chromatogram obtained with the reference drug solution.

(5) Triturate 10 g of pills to fine powder, add 20 ml of methanol and ultrasonicate for 30 minutes. Filter, evaporate the filtrate to dryness and dissolve the residue in 1 ml of ethanol as the test solution. To 0.5 g of Pericarpium Citri Reticulatae reference drug, add 5 ml of methanol, ultrasonicate for 30 minutes; and filter. Use the filtrate as the reference drug solution. Dissolve a quantity of hesperidin CRS in methanol to prepare a saturated solution as the reference solution. Carry out the method for thin layer chromatography (Appendix Ⅵ B), using silica gel G as the coating substance and a mixture of ethyl acetate, methanol and water (100 : 17 : 13) as the mobile phase. Apply separately 5 μl of the above three kinds of solutions to the plate. After developing about 3 cm and removal of the plate, dry in air. Use the upper layer of a mixture of toluene, ethyl acetate, formic acid and water (20 : 10 : 1 : 1) as the second mobile phase. After developing about 8 cm and removal of the plate, dry in air. Spray with aluminium chloride TS and examine under ultraviolet light at 365 nm. The fluorescent spots in the chromatogram obtained with the test solution correspond in position and colour to the spots in the chromatogram obtained with the reference solution and reference drug solution.

Other requirements Comply with the general requirements for pills (Appendix Ⅰ A).

Assay Carry out the method for high performance liquid chromatography (Appendix Ⅵ D).

Chromatographic system and system suitability Use octadecylsilance bonded silica gel as the stationary phase and a mixture of methanol, water and acetic acid (40 : 60 : 0.3) as the mobile phase. As detector a spectrophotometer set at 283 nm. The number of theoretical plates of the column is not less than 2000, calculated with the reference to the peak of hesperidin.

Reference solution Dissolve a quantity of hesperidin CRS, accurately weighed, in methanol to prepare a solution containing 40 μg per ml.

Test solution Triturate pills to fine powder, weigh accurately 0.5 g of the powder, to a stopper conical flask, add accurately 50 ml of methanol and stopper tightly. Weigh and macerate overnight. Ultrasonicate (power, 250 W; frequency, 33 kHz) for 30 minutes, allow to stand to cool. Weigh again and replenish the loss of weight with methanol, mix thoroughly. Filter, use the successive filtrate as the test solution.

Procedures Inject accurately 10 μl of each of the reference solution and the test solution into the column, and calculate the content.

It contains not less than 2.2 mg of hesperidin ($C_{28}H_{34}O_{15}$) per gram, referred to Pericarpium Citri Reticulatae.

Action To regulate *qi* and blood circulation to kill pain.

Indications Distending pain in the chest and hypochondria or dysmenorrhea due to stagnation of *qi* and blood.

Usage and dosage 6-9 g, twice a day.

Precaution Contraindicated for pregnant women.

Storage Preserve in tightly closed containers.

Jiusheng San
(九圣散)

Jiusheng Powder

Ingredients Rhizoma Atractylodis 150 g; Cortex Phellodendri Chinensis 200 g; Folium Perillae 200 g; Semen Armeniacae Amarum 400 g; Herba Menthae 200 g; Olibanum 120 g; Myrrha 120 g; Calomelas 50 g; Hydrargyri Oxydum Rubrum 50 g.

Procedure Levigate or pulverize separately Calomelas and Hydrargyri Oxydum Rubrum to very fine powder and pulverize the other seven ingredients to fine powder. Triturate all the powders, sift through the sieve made of thin and tough silk (do not use the sieve made of metallic wire) and mix well.

Description A brownish-yellow to pale brown powder; odour, delicately aromatic.

Identification Microscopical: Irregular masses colourless or pale yellow, with plenty of minute granules scattered on surface and around, dissolved on long standing. Minute clusters of calcium oxalate in mesophyll, 4-8 μm in diameter. Needle crystals of calcium oxalate irregularly filling in parenchymatous cells. Fibre bundles bright yellow, surrounded by parenchymatous cells containing prisms of calcium oxalate, forming crystal fibres, crystal cells with thickened and lignified walls. Stone cells orange-yellow, conchoidal, with thickened walls and pits distinct on the broader side of the walls.

Other requirements Comply with the general requirements for powders (Appendix Ⅰ B).

Action To remove toxic materials to reduce swelling, and to eliminate *dampness* to relieve itching.

Indications Ulcers, chronic shank ulcer or impetigo due to *dampness* retained in the skin with manifestations of ulcers with pyecchysis.

Usage and dosage For external use, it is mixed with pepper oil or edible plant oils and applied topically, or sprinkled directely to the affected area.

Precaution Never for per os.

Storage Preserve in tightly closed containers, protected from moisture.

Jiuwei Qianghuo Keli
(九味羌活颗粒)

Jiuwei Qianghuo Granules

Ingredients Rhizoma seu Radix Notopterygii 150 g; Radix Saposhnikoviae 150 g; Rhizoma Atractylodis 150 g; Radix et Rhizoma Asari 50 g; Rhizoma Chuanxiong 100 g; Radix Angelicae Dahuricae 100 g; Radix Scutellariae 100 g; Radix et Rhizoma Glycyrrhizae 100 g; Radix Rehmanniae 100 g.

Procedure Pulverize Radix Angelicae Dahuricae to coarse powder, carry out the method for percolation described under liquid extracts and extracts (Appendix Ⅰ O), use 70% ethanol as solvent to macerate for 24 hours and then take percolating. Collect the percolations for later use. Distill essential oils from Rhizoma seu Radix Notopterygii, Radix Saposhnikoviae, Rhizoma Atractylodis, Radix et Rhizoma Asari and Rhizoma Chuanxiong, collect the water solution after distillation for late use. Decoct the residue, Radix Scutellariae, Radix et Rhizoma Glycyrrhizae and Radix Rehmanniae with water 3 times, 1 hour for each time, combine the decoctions and filter. Combine the filtrate with the above water solution and concentrate to about 900 ml, add same volume of ethanol, allow to stand. Separate the supernate and combine with the above percolations, recover ethanol and concentrate to form a thin extract with a relative density of 1.38-1.40 (60-65℃). Take 1 portion of the thin extract, 2.5 portions of sucrose and 1.5 portion of dextrin, make granules and dry, then spray the above distilled essential oil and mix well.

Description Brownish-yellow granules; odour, aromatic; taste, sweet and slightly bitter.

Identification (1) Triturate 10 g of granules to fine powder, add 20 ml of water and heat to dissolve, cool, apply to a DA-201 macroporous adsorption resin column (1 cm in diameter, column height 12 cm, packed with water). Elute with 100 ml of water, then 30 ml of 60% ethanol, collect the ethanolic eluation and evaporate to dryness. Dissolve the residue in 2 ml of methanol, and use the supernatant as the test solution. To 0.5 g of Radix et Rhizoma Glycyrrhizae reference drug, add 30 ml of water, boil for 30 minutes and filter. Evaporate the filtrate to about 20 ml, then prepare a solution in the same manner as the reference drug solution. Carry out the method for thin layer chromatography (Appendix Ⅵ B), using silica gel G mixed with 1% solution of sodium hydroxide as the coating substance and a mixture of ethyl acetate, formic acid, glacial acetic acid and water (15 : 1 : 1 : 2) as the mobile phase. Apply separately 5 μl of each of the two solutions to the plate. After developing and removal of the plate, dry in air. Spray with 10% sulfuric acid in ethanol and heat at 105℃ to the spots clear. Examine under ultraviolet light at 365 nm. The fluorescent spots in the chromatogram obtained with the test solution correspond in position and colour to the

spots in the chromatogram obtained with the reference drug solution.

(2) Triturate 15 g of granules to fine powder, ultrasonicate with 30 ml of methanol for 30 minutes, filter, evaporate the filtrate to dryness. Dissolve the residue in 1 ml of methanol as the test solution. Dissolve baicalin CRS in methanol to prepare a solution containing 1 mg per ml as the reference solution. Carry out the method for thin layer chromatography (Appendix Ⅵ B), using silica gel G mixed with sodium carboxymethylcellulose containing 4% solution of sodium acetate as the coating substance and a mixture of ethyl acetate, butanone, formic acid and water (5 : 3 : 1 : 1) as the mobile phase. Apply separately 10 μl of the test solution and 5 μl of the reference solution to the plate. After developing and removal of the plate, dry in air. Spray with 2% ferric chloride in ethanol. The spot in the chromatogram obtained with the test solution corresponds in position and colour to the spot in the chromatogram obtained with the reference solution.

Other requirements Comply with the general requirements for granules (Appendix Ⅰ C).

Assay Carry out the method for high performance liquid chromatography (Appendix Ⅵ D).

Chromatographic system and system suitability Use octadecylsilane bonded silica gel as the stationary phase and a mixture of methanol, water and phosphoric acid (40 : 60 : 0.2) as the mobile phase. As detector a spectrophotometer set at 280 nm, The number of theoretical plates of the column is not less than 3000, calculated with the reference of the peak of baicalin.

Reference solution Dissolve a quantity of baicalin, weighed accurately, in methanol to prepare a solution containing 18 μg per ml.

Test solution Triturate a quantity of the granules, obtained under the test of weight variation to fine powder, mix well. Weigh accurately 1 g, add exactly 20 ml of 70% ethanol, stopper closely and ultrasonicate for 10 minutes, centrifuge and use the supernatant.

Procedure Inject accurately 20 μl of each of the reference solution and the test solution into the column, and calculate the content.

It contains not less than 1.5 mg of baicalin ($C_{21}H_{18}O_{11}$) per pack, referred to Radix Scutellariae.

Action To disperse *wind* to release the exterior, and remove *cold* and *dampness*.

Indications Common cold due to affliction from external *wind-cold* and *dampness* with manifestions of aversion to *cold*, fever, adiaphoresis, heavy-headedness and headache and aching pain of limbs.

Usage and dosage 15 g, 2-3 times a day, taken with ginger soup or boiled water.

Strength 15 g per pack

Storage Preserve in tightly closed containers.

Jiuwei Qianghuo Koufuye (九味羌活口服液)

Jiuwei Qianghuo Mixture

Ingredients Rhizoma seu Radix Notopterygii 150 g; Radix Saposhnikoviae 150 g; Rhizoma Atractylodis 150 g; Radix et Rhizoma Asari 50 g; Rhizoma Chuanxiong 100 g; Radix Angelicae Dahuricae 100 g; Radix Scutellariae 100 g; Radix et Rhizoma Glycyrrhizae 100 g; Radix Rehmanniae 100 g.

Procedure Pulverize Radix Angelicae Dahuricae to coarse powder, carry out the method for percolation described under liquid extracts and extracts (Appendix Ⅰ O), using 70% ethanol as solvent, macerate for 24 hours, and then percolate. Collect the percolation for latter use. Distill essential oils from Rhizoma seu Radix Notopterygii, Radix Saposhnikoviae, Rhizoma Atractylodis, Radix et Rhizoma Asari, and Rhizoma Chuanxiong, collect the water solution after distillation for later use. Decoct the residue and Radix Scutellariae, Radix et Rhizoma Glycyrrhizae, and Radix Rehmanniae with water 3 times, 1 hour for each time, combine the decoctions and filter. Combine the filtrate with the above water solution and concentrate to about 900 ml, add same volume of ethanol to precipitate. Separate the supernatant and combine with the above percolate, recover ethanol and concentrate to a thin extract with a relative density of 1.10-1.20 (70℃), dilute to 800 ml with water, keep for latter use. Dissolve 100 g of sucrose in water by heating to prepare sugar syrup, keep for latter use. Add the essential oils to 2 ml of polysorbate 80, add a quantity of concentrated decoction again, mix well, add concentrated decoction, sugar syrup, and 2 g of sorbic acid and mix well. Add water to 1000 ml, mix well, pack and sterilize.

Description A dark brown liquid; odour, slightly aromatic; taste, bitter, pungent, slightly sweet.

Identification (1) To 40 ml of the mixture, add 150 ml of water, carry out the method for determination of volatile oil (Appendix Ⅹ D). Add 1 ml of petroleum ether (60-90℃) from the top of the apparatus, heat to slightly boil for 2 hours. Allow to cool, use the petroleum ether layer as the test solution. To 0.5 g of Rhizoma Chuanxiong reference drug add 15 ml of ether, ultrasonicate for 15 minutes, filter, evaporate the filtrate to dryness at a lower temperature, dissolve the residue in 1 ml of ethyl acetate as the reference drug solution. Carry out the method for thin layer chromatography (Appendix Ⅵ B), using silica gel G as the coating substance and a mixture of *n*-hexane and ethyl acetate (9 : 1) as the mobile phase. Apply separately 10 μl of the test solution and 5 μl of the reference drug solution to the plate. After developing and removing the plate, dry in air, and examine under ultraviolet light at 365 nm. The fluorescent spots in the chromatography obtained with the test solution correspond in position and colour to the spots in the chromatography obtained with the reference drug solution.

(2) To 30 ml of the mixture, extract by shaking with one 50-ml and two 20-ml quantities of ether, and keep the water layer for latter use. Combine the ether extracts, evaporate to dryness on a water bath at a lower temperature, dissolve the residue in 1 ml of ethyl acetate as the test solution. To 1 g of Radix Angelicae Dahuricae reference drug, add 10 ml of ethanol, ultrasonicate for 20 minutes, filter, and concentrate the filtrate to 1 ml as the reference drug solution. Carry out the method for thin layer chromatography (Appendix Ⅵ B), using silica gel G as the coating substance and a mixture of chloroform and methanol (10 : 1) as the mobile phase. Apply separately 5 μl of each of the test solution and the reference drug solution to the plate. After developing in a chamber pre-equilibrated with mobile phase for 20 minutes, remove the plate, dry in air, and examine under ultraviolet light at 365 nm. A yellow fluorescent spot in the chromatography obtained with the test solution correspond in position and colour to the spot in the chromatography obtained with the reference drug solution.

(3) To 20 ml of the mixture, add 20 ml of chloroform and 1 ml of concentrated ammonia TS, and heat under reflux for 1

hour. Separate the chloroform layer, evaporate to dryness, dissolve the residue in 1 ml of methanol as the test solution. Prepare a solution of 0.5 g of Radix Saposhnikoviae reference drug in the same manner as the reference drug solution. Carry out the method for thin layer chromatography (Appendix Ⅵ B), using silica gel G as the coating substance and a mixture of benzene, acetone, ethyl acetate and concentrated ammonia TS (2 : 3 : 4 : 0.2) as the mobile phase. Apply separately 10 μl of the test solution and 2 μl of the reference drug solution to the plate. After developing and removing the plate, dry in air. Spray with 10% sulfuric acid in ethanol, heat at 105℃ for about 5 minutes, examine under ultraviolet light at 365 nm. The main fluorescent spots in the chromatography obtained with the test solution correspond in position and colour to the spots in the chromatography obtained with the reference drug solution.

(4) To the water solution, obtained under the Identification (2), extract again with two 30-ml quantities of ethyl acetate. Combine the ethyl acetate extracts, evaporate to dryness on a water bath, and dissolve the residue in 1 ml of methanol as the test solution. To 1 g of Radix et Rhizoma Glycyrrhizae reference drug, add 40 ml of ether, heat under reflux for 1 hour, filter. Expel the solvent remained in the residue, add 30 ml of methanol, ultrasonicate for 20 minutes. Filter, evaporate the filtrate to dryness, and dissolve the residue in 40 ml of water. Extract with three 20-ml quantities of *n*-butanol saturated with water, combine the *n*-butanol extracts, and wash with three 30-ml quantities of water. Separate the *n*-butanol layer and evaporate to dryness, dissolve the residue in 1 ml of methanol as the reference drug solution. Carry out the method for thin layer chromatography (Appendix Ⅵ B), using silica gel G mixed with 1% sodium hydroxide solution as the coating substance and a mixture of ethyl acetate, formic acid, glacial acetic acid and water (15 : 1 : 1 : 2) as the mobile phase. Apply separately 3 μl of each of the test solution and the reference drug solution to the plate. After developing and removing the plate, dry in air. Spray with 10% sulfuric acid in ethanol, heat at 105℃ to the spots clear. The spots in the chromatography obtained with the test solution correspond in position and colour to the spots in the chromatography obtained with the reference drug solution.

Relative density Not less than 1.07 (Appendix Ⅶ A).

pH value 4.0-6.0 (Appendix Ⅶ G).

Other requirements Comply with the general requirements for mixtures (Appendix Ⅰ J).

Assay Carry out the method for high performance liquid chromatography (Appendix Ⅵ D).

Chromatographic system and system suitability Use octadecylsilane bonded silica gel as the stationary phase and a mixture of methanol, water and phosphoric acid (43 : 57 : 0.2) as the mobile phase. As detector a spectrophotometer set at 280 nm. The number of theoretical plates of the column is not less than 3000, calculated with the reference to the peak of baicalin.

Reference solution Weigh accurately a quantity of baicalin CRS, dissolve in methanol to prepare a reference solution containing 0.12 mg per ml.

Test solution Measure accurately 1 ml of the mixture in a 25 ml volumetric flask, dilute to volume with methanol, mix well, filter, and use the successive filtrate as the test solution.

Procedures Inject accurately 5 μl of each of the reference solution and the test solution into the column, respectively, and calculate the content.

It contains not less than 1.5 mg of baicalin ($C_{21}H_{18}O_{11}$) per ml, referred to Radix Scutellariae.

Action To disperse *wind* to release the exterior, and remove *cold* and *dampness*.

Indications Common cold due to affliction from external *wind-cold* and *dampness* with manifestations of aversion to cold, fever, adiaphoresis, heavy-headedness and headache and aching pain of limbs.

Usage and dosage 20 ml, 2-3 times a day.

Strength 10 ml per phial

Storage Preserve in tightly closed containers.

Jiuwei Qianghuo Wan
(九味羌活丸)

Jiuwei Qianghuo Pills

Ingredients Rhizoma seu Radix Notopterygii 150 g; Radix Saposhnikoviae 150 g; Rhizoma Atractylodis 150 g; Radix et Rhizoma Asari 50 g; Rhizoma Chuanxiong 100 g; Radix Angelicae Dahuricae 100 g; Radix Scutellariae 100 g; Radix et Rhizoma Glycyrrhizae 100 g; Radix Rehmanniae 100 g.

Procedure Pulverize the above nine ingredients to fine powder, sift and mix well. Make pills with water and dry.

Description Brown watered pills; odour, aromatic; taste, pungent, and slightly bitter.

Identification (1) Microscopical: Single starch granules subrounded or ellipsoidal, 21-26 μm in diameter. Vattae containing golden-yellow secretion, 30 μm in diameter. Fibre bundles surrounded by parenchymatous cells containing prisms of calcium oxalate. Bast fibres pale yellow, spidle-shaped, with thickened walls and minute pit-canals. Parenchyma greyish-brown to blackish-brown, cells mostly wrinkled, and each containing a brown nucleus-like mass. Parenchymatous cells containing minute sand crystals of calcium oxalate.

(2) Triturate 3 g of pills to fine powder, add 15 ml of ether, ultrasonicate for 15 minutes, filter and expel the ether. Dissolve the residue in 1 ml of ethyl acetate as the test solution. Prepare a solution of 0.5 g of Rhizoma Atractylodis reference drug in the same manner as the reference drug solution. Carry out the method for thin layer chromatography (Appendix Ⅵ B), using silica gel G as the coating substance and petroleum ether (60-90℃) as the mobile phase. Apply separately 5-10 μl of each of the two solutions to the plate. After developing and removal of the plate, dry in air. Spray with a fresh solution of 5% *p*-dimethylaminobenzaldehyde in 10% sulfuric acid and heat to the spots clear. The dark green spots in the chromatogram obtained with the test solution correspond in position and colour to the spots in the chromatogram obtained with the reference drug solution.

(3) Prepare a solution of 0.3 g of Rhizoma Chuanxiong reference drug in the same manner as described under the Identification test (2) as the reference drug solution. Carry out the method for thin layer chromatography (Appendix Ⅵ B), using silica gel G as the coating substance and a mixture of *n*-hexane and ethyl acetate (9 : 1) as the mobile phase. Apply separately 3 μl of each of the test solution obtained under Identification (2) and the reference drug solution to the plate. After developing and removal of the plate, dry in air. Examine under ultraviolet light at 365 nm. The fluorescent spots in the chromatogram obtained with the test solution correspond in position and colour to the spots in the chromatogram obtained with the reference drug solution.

(4) Triturate 10 g of pills to fine powder, heat under reflux

with 100 ml of ether for 30 minutes, filter; reserve residue for later use. Wash the filtrate with two 20-ml quantities of 1% solution of sodium hydroxide and two 20-ml quantities of water, discard the washing. Expel the ether, and dissolve the residue in 2 ml of ethyl acetate as the test solution. Ultrasonicate 0.5 g of Rhizoma et Radix Notopterygii reference drug with 20 ml of ether for 15 minutes, filter, expel the ether and dissolve the residue in 2 ml of ethyl acetate as the reference drug solution. Carry out the method for thin layer chromatography (Appendix Ⅵ B), using silica gel as the coating substance and a mixture of petroleum ether (30-60℃) and ethyl acetate (3 : 1) as the mobile phase. Apply separately 5 μl of the above two kinds of solutions to the plate. After developing and removal of the plate, dry in air. Spray with 5% vanillin in sulfuric acid. The spots in the chromatogram obtained with the test solution correspond in position and colour to the spots in the chromatogram obtained with the reference drug solution.

(5) Heat under reflux the reserved residue under Identification (4) with 100 ml of methanol for 1 hour, allow standing to cool and filter, evaporate the filtrate to dryness. Dissolve the residue in 40 ml of water and filter, extract the filtrate with three 30-ml quantities of *n*-butanol. Combine the extract and wash with three 30-ml quantities of water, discard the water, evaporate the *n*-butanol extract to dryness. Dissolve the residue in 5 ml of methanol as the test solution. Prepare a solution of 1 g of Radix et Rhizoma Glycyrrhizae in the same manner as the reference drug solution. Carry out the method for thin layer chromatography (Appendix Ⅵ B), using silica gel mixed with 1% solution of sodium hydroxide as the coating substance and a mixture of ethyl acetate, formic acid, glacial acetic acid and water (15 : 1 : 1 : 2) as the mobile phase. Apply separately 1-3 μl of the above two kinds of solutions to the plate. After developing and removal of the plate, dry in air. Spray with 10% sulfuric acid in ethanol and heat at 105℃ to the spots clear. The spots in the chromatogram obtained with the test solution correspond in position and colour to the spots in the chromatogram obtained with the reference drug solution.

Total ash Not more than 7.0 per cent (Appendix Ⅸ K).

Acid-insoluble ash Not more than 2.0 per cent (Appendix Ⅸ K).

Other requirements Comply with the general requirements for pills (Appendix Ⅰ A).

Volatile ether extractives Place 2 g of the coarse powder, carry out the method for determination of volatile ether extractives (Appendix Ⅹ A), not less than 0.30 per cent.

Assay Carry out the method for high performance liquid chromatography (Appendix Ⅵ D).

Chromatographic system and system suitability Use octadecylsilance bonded silica gel as the stationary phase and a mixture of methanol, water and phosphoric acid (47 : 53 : 0.2) as the mobile phase. As detector a spectrophotometer set at 280 nm. The number of theoretical plates of the column is not less than 3000, calculated with the reference to the peak of baicalin.

Reference solution Dissolve a quantity of baicalin CRS, accurately weighed, in methanol to prepare a solution containing 60 μg per ml.

Test solution Triturate pills to fine powder, weigh accurately 0.5 g of the powder, add accurately 50 ml of methanol and weigh. Heat under reflux for 1 hour, cool, weigh again and replenish the lost weight with methanol. Mix thoroughly and filter.

Procedure Inject accurately 10 μl of each of the reference solution and the test solution into the column, and calculate the content.

It contains not less than 5.0 mg of baicalin ($C_{21}H_{18}O_{11}$) per gram, referred to Radix Scutellariae.

Action To disperse *wind* to release the exterior, and remove *cold* and *dampness*.

Indications Common cold due to affliction from external *wind-cold* and *dampness* with manifestations of aversion to cold, fever, adiaphoresis, heavy-headedness and headache and aching pain of limbs.

Usage and dosage 6-9 g, 2-3 times a day, taken with ginger and Chinese onion soup or warm boiled water.

Storage Preserve in tightly closed containers, protected from moisture.

Jiuwei Shihuihua San
(九味石灰华散)

Jiuwei Shihuihua Powder

Jiuwei Shihuihua Powder is a prescription used by Tibetan Nationality.

Ingredients Calx Pulveratum 100 g; Flos Carthami 80 g; Calculus Bovis 4 g; Radix et Rhizoma Rhodiolae Crenulatae 80 g; Herba Aconiti 100 g; Radix et Rhizoma Glycyrrhizae (peeled) 80 g; Herba Pegaeophyti 80 g; Lignum Santali Albi 100 g; Herba Lagotidis 100 g.

Procedure Pulverize the above ingredients, except Calculus Bovis, to fine powder. Triturate Calculus Bovis with the above powder, sift and mix well.

Description A pale yellow powder; odour, aromatic; taste, sweet and slightly bitter.

Other requirements Comply with the general requirements for powders (Appendix Ⅰ B).

Action To remove *toxic heat*, relieve cough, and to induce sedation.

Indications Pneumonia with high fever, restlessness and cough in children.

Usage and dosage 0.6-0.9 g, twice a day; appropriate reduction of the dosage for children under 3 years of age.

Storage Preserve in tightly closed containers, protected from moisture.

Jiuyi San
(九一散)

Jiuyi Powder

Ingredients Gypsum Fibrosum (Praeparatum) 900 g; Hydrargyri Oxydum Rubrum (levigated) 100 g.

Procedure Pulverize Gypsum Fibrosum and levigate Hydrargyri Oxydum Rubrum to very fine powder. Triturate to mix and sift through the sieve made of thin and tough silk (do not use the sieve made of metallic wire), then mix well.

Description A pale orange or pale pink fine powder.

Identification (1) Shake 0.1 g of the powder with 10 ml of water, and filter. The filtrate yields the reactions charcteristic of calcium salts (Appendix Ⅳ) and sulfates (Appendix Ⅳ).

(2) Shake 0.5 g of the powder with 10 ml of dilute nitric

acid, and filter. To 1 ml of the filtrate add 1 drop of potassium iodide TS; a scarlet precipitate is produced, which is dissolved on adding excess of potassium iodide TS.

Other requirements Comply with the general requirements for powders (Appendix Ⅰ B).

Assay Weigh accurately 2 g of the powder, add 25 ml of dilute nitric acid to dissolve Hydrargyri Oxydum Rubrum, and filter. Wash the residue with about 80 ml of water in several portions. Combine the filtrate and washings, add 2 ml of ammonium ferric sulfate IS and titrate with ammonium thiocyanate (0.1 mol/L) VS. 1 ml of ammonium thiocyanate (0.1 mol/L) corresponds to 10.83 mg of HgO.
It contains not less than 90 mg and not more than 110 mg of HgO per gram, referred to Hydrargyri Oxydum Rubrum.

Action To drain pus to eradicate *toxicity* and remove necrotic tissues to promote growth of new tissues.

Indications Ulcers due to abundant retained *heat* with manifestations of bright red ulcerous wound in which pus and nectrotic tissues are almost exhausted.

Usage and dosage For external use, appropriate quantity of the powder is sprinkled to the affected area evenly. For deep wound or fistulae, medicated thread is insert in, and the wound is dressed with ointment or gauze. Change the dressing daily or follow the surgeon's order.

Precaution For external use only, never for oral administration, and contraindicated for patients with wounds at the area of thin soft tissue where suppuration is impossible, or patients with wounds of much thick secretion.

Strength 1.5 g per bottle

Storage Preserve in tightly closed containers, protected from light and moisture.

Jizhi Tangjiang (急支糖浆)

Jizhi Syrup

Ingredients Herba Houttuyniae; Rhizoma Fagopyri Dibotryis; Folium Ilicis Chinensis; Herba Ephedrae; Radix et Rhizoma Asteris; Radix Peucedani; Fructus Aurantii; Radix et Rhizoma Glycyrrhizae.

Procedure Distill Herba Houttuyniae and Fructus Aurantii with water, collect the distillation. Decoct the residue and other six ingredients twice, filter, combine the filtrate and concentrate to an appropriate amount. Boil a quantity of sucrose with water, filter, combine it with the above distillation and concentrated solution, add a quantity of preservative, or add a quantity of flavoring agents and preservative. Add water to the specified quantity, mix well and fill into appropriate bottles.

Description Brownish-black thick liquid; taste, sweet, slightly bitter.

Identification (1) To 20 ml of the syrup, add dilute hydrochloric acid to adjust to pH 2-3. Transfer the solution to a separating funnel, extract with two 20-ml quantities of ether, combine the ether solutions and evaporate to dryness, dissolve the residue in 1 ml of methanol as the test solution. Dissolve separately a quantity of ferulic acid CRS and protocatechuic acid CRS in methanol to prepare two kinds of solutions each containing 1 mg per ml as the reference solutions. Carry out the method for thin layer chromatography (Appendix Ⅵ B), using silica gel GF_{254} as the coating substance, and a mixture of benzene, ethyl acetate and formic acid (20 : 10 : 1) as the mobile phase. Apply separately 5 μl of each of the three solutions to the plate. After developing and removal of the plate, dry in air and examine under ultraviolet light at 254 nm. The spots in the chromatogram obtained with the test solution correspond in position and colour to the spots in the chromatogram obtained with the reference solutions.
(2) Dilute 10 ml of the syrup with 20 ml of water, and transfer to a separating funnel, adjust to pH 10-12 with concentrated ammonia TS. Extract with two 15-ml quantities of ether. Combine the ether solutions and evaporate to dryness on a water bath. Dissolve the residue in 1 ml of methanol as the test solution. Dissolve a quantity of ephedrine hydrochloride CRS in methanol to prepare a solution containing 1 mg per ml as the reference solution. Carry out the method for thin layer chromatography (Appendix Ⅵ B), using silica gel G as the coating substance, and a mixture of chloroform, methanol and concentrated ammonia TS (40 : 10 : 1) as the mobile phase. Apply separately 10 μl of the test solution and 2 μl of the reference solution to the plate. After developing and removal of the plate, dry in air. Spray with ninhydrin TS, heat at 105℃ to the spots clear. The spot in the chromatogram obtained with the test solution corresponds in position and colour to the spot in the chromatogram obtained with the reference solution.
(3) Transfer 20 ml of the syrup to a separating funnel, extract with two 20-ml quantities of ether and discard the ether solution. Extract the water layer with two 30-ml quantities of ethyl acetate. Combine the ethyl acetate solutions and evaporate to dryness on a water bath. Dissolve the residue in 1 ml of methanol as the test solution. Dissolve a quantity of naringin CRS in methanol to prepare a solution containing 1 mg per ml as the reference solution. Carry out the method for thin layer chromatography (Appendix Ⅵ B), using silica gel G as the coating substance, and the lower layer of chloroform, methanol and water (32 : 17 : 5) as the mobile phase. Apply separately 10 μl of the test solution and 5 μl of the reference solution to the plate. After developing and removal of the plate, dry in air. Spray with 2% aluminium trichloride in methanol, and examine under ultraviolet light at 365 nm. The fluorescent spot in the chromatogram obtained with the test solution corresponds in position and colour to the fluorescent spot in the chromatogram obtained with the reference solution.

Relative density Not less than 1.17 (Appendix Ⅶ A).

pH value 4.0-5.5 (Appendix Ⅶ G).

Other requirements Comply with the general requirements for syrups (Appendix Ⅰ H).

Assay Carry out the method for high performance liquid chromatography (Appendix Ⅵ D).

Chromatographic system and system suitability Use octadecylsilane bonded silica gel as the stationary phase and a mixture of methanol and 1% solution of acetic acid (40 : 60) as the mobile phase. As detector a spectrophotometer set at 283 nm. The number of theoretical plates of the column is not less than 3000, calculated with the reference of the peak of naringin.

Reference solution Weigh accurately a quantity of naringin CRS, previously dried to a constant weight at 110℃, dissolve in methanol to prepare a solution containing 80 μg per ml as the reference solution.

Test solution Transfer exactly 10 ml of the syrup to a 50 ml volumetric flask, add dilute ethanol to volume, mix thoroughly, centrifuge at 4000 rpm for 10 minutes. Filter the supernatant and use the successive filtrate as the test

solution.

Procedures Inject accurately 10 μl of each of the reference solution and test solution into the column, and calculate the content.

It contains not less than 0.20 mg of naringin ($C_{27}H_{32}O_{14}$), referred to Fructus Aurantii.

Action To clear *heat* and resolve *phlegm*, and disseminate the lung and stop coughing.

Indications Coughing due to affliction from external *wind-heat* with manifestations of fever, aversion to cold, fullness in the chest, coughing and painful throat; acute bronchitis, acute attack of chronic bronchitis with above symptoms.

Usage and dosage 20-30 ml, 3-4 times a day. 5 ml, for children under 1 year old; 7 ml, for children 1-3 years old; 10 ml, for children 3-7 years old; 15 ml, for children over 7 years old.

Storage Preserve in tightly closed containers.

Juanxiao Pian
(蠲哮片)

Juanxiao Tablets

Ingredients Semen Lepidii seu Descurainiae; Pericarpium Swertiae Mileensis; Pericarpium Citri Reticulatae; Fructus Viticis Negundinis; Semen Arecae; Radix et Rhizoma Rhei; Rhizoma Zingiberis Recens.

Procedure Squeeze Rhizoma Zingiberis Recens, pulverize Radix et Rhizoma Rhei to fine powder. Distill Semen Lepidii seu Descurainiae (packaged with calico), Pericarpium Swertiae Mileensis, Pericarpium Citri Reticulatae, Fructus Viticis Negundinis and Semen Arecae, collect the distillate, filter the water solution after distilling for latter use. Decoct the residue with water one time and filter. Combine the filtrate with the above filtrate and concentrate to form a thin extract with relative density of 1.08-1.15 (80℃), add ethanol to a content of 65% ethanol, stand for 24 hours, and filter. Recover ethanol from the filtrate, concentrate to form a thick extract with a relative density of 1.25-1.30 (80℃), mix with the powder of Radix et Rhizoma Rhei, dry, pulverize to fine powder, add a quantity of starch and ethanol, make granules and dry. Spray the juice of Rhizoma Zingiberis Recens and the distillate, mix well, add a quantity of starch, make to 1000 tablets and coated with film.

Description Film coated tablets with brown colour core; odour, delicately aromatic; tast, bitter.

Identification (1) Pulverize 5 tablets, removed the coats, to fine powder. Add 30 ml of ethyl acetate, heat under reflux for 30 minutes, filter. Extract the filtrate two 15-ml quantities of 5% sodium carbonate solution. Separate the alkaline solution, adjust to pH 2-3 with hydrochloric acid. Extract with two 15-ml quantities of ethyl acetate, combine the ethyl acetate extract, wash with water to neutral. Evaporate the ethyl acetate extract to dryness, dissolve the residue in 2.5 ml of methanol as the test solution. Prepare a solution of 0.2 g of Fructus Viticis Negundinis reference drug in the same manner as the reference drug solution. Carry out the method for the thin layer chromatography (Appendix Ⅵ B), using silica gel G mixed with sodium carboxymethylcellulose as the coating substance and a mixture of *n*-hexane, chloroform, methanol and formic acid (5 : 3.6 : 0.3 : 0.1) as the mobile phase. Apply separately 2 μl of each of the test solution and the reference drug solution in strips to the plate. After developing and removal of the plate, dry in air, spray with a mixture of acetic anhydride, sulfuric acid and dehydrated ethanol (1 : 1 : 1.5), heat at 105℃ to the spots clear. Examine under ultraviolet light at 365 nm. The fluorescent strips in the chromatogram obtained with the test solution correspond in position and colour to the strips in the chromatogram obtained with the reference drug solution.

(2) Pulverize 10 tablets, removed the coats, to fine powder. Add 50 ml of methanol, ultrasonicate for 20 minutes, filter. Evaporate 5 ml of the filtrate to dryness, dissolve the residue in 10 ml of water, add 1 ml of hydrochloric, heat on a water bath for 30 minutes, cool immediately. Extract with two 20-ml quantities of ether, combine the ether extract, and expel the solvent to dryness. Dissolve the residue in 1 ml of chloroform as the test solution. Prepare a solution of 0.1 g of Radix et Rhizoma Rhei reference drug as the reference drug solution in the same manner. Carry out the method for thin layer chromatography (Appendix Ⅵ B), using silica gel H containing sodium carboxymethylcellulose as the coating substance and a mixture of petroleum ether (60-90℃), ethyl acetate and formic acid (15 : 5 : 1) as the mobile phase. Apply separately 4 μl of each of the test solution and the reference drug solution to the plate. After developing and removal of the plate, dry in air, expose the plate to ammonia vapour until the spots clear. The spots in the chromatogram obtained with the test solution correspond in position and colour to the spots in the chromatogram obtained with the reference drug solution.

(3) Pulverize 10 tablets, removed the coats, to fine powder. Moisten with 1 ml of ammonia TS, add 20 ml of chloroform, heat under reflux for 1 hour, filter. Extract the filtrate with 20 ml of 5% solution of hydrochloric acid by shaking. Separate the acidified solution, adjust to pH 8-9 with ammonia TS. Extract with two 5-ml quantities of chloroform, combine the chloroform extracts, expel the solvent at a lower temperature to dryness. Dissolve the residue in 1 ml of chloroform as the test solution. Prepare a solution of 1.5 g of Semen Arecae reference drug as the reference drug solution in the same manner. Carry out the method for thin layer chromatography (Appendix Ⅵ B), using silica gel G containing sodium carboxymethylcellulose as the coating substance and the upper layer of chloroform and methanol (19 : 1) as the mobile phase. Apply separately 10 μl of each of the test solution and the reference drug solution in strips to the plate. After developing and removal of the plate, dry in air, spray with potassium iodobismuthate TS, expose the plate to iodine vapour until the strips clear. The strips in the chromatogram obtained with the test solution correspond in position and colour to the strips in the chromatogram obtained with the reference drug solution.

Other requirements Comply with the general requirements for tablets (Appendix Ⅰ D).

Assay Carry out the method for high performance liquid chromatography (Appendix Ⅵ D).

Chromatographic system and system suitability Use octadecylsilane bonded silica gel as the stationary phase, a mixture of methanol, water and glacial acetic acid (30 : 70 : 1) as the mobile phase. As detector a spectrophotometer set at 285 nm. The number of theoretical plates of the column is not less than 1500, calculated with the reference to the peak of hesperidin.

Reference solution Dissolve a quantity of hesperidin CRS, accurately weighed, in methanol to prepare a solution containing 30 μg per ml as the reference solution.

Test solution Pulverize 10 tablets, removed coats, to fine

powder. To about 0.2 g of the powder, weigh accurately, in a Soxhlet's extractor, add a quantity of methanol, heat under reflux at 80℃ on the water bath for 4 hours until the extracts to colourless. Transfer the extracts to 100 ml volumetric flask, wash the container with a small quantity of methanol, combine the washings to the same volumetric flask, cool, add methanol to volume. Mix thoroughly, filter and use the successive filtrate as the test solution.

Procedure Inject accurately 5 μl of each of the reference solution and the test solution into the column, and calculate the content.
It contents not less than 3.0 mg of hesperidin ($C_{28}H_{34}O_{15}$) per table, referred to Pericarpium Citri Reticulatae Viride and Pericarpium Citri Reticulatae.

Action To purge the lung to eliminate stagnated *qi*, expel *phlegm* and stasis, and send *qi* downward to relieve asthma.

Indications Bronchial asthma at the stage of acute attack due to *heat* and phlegm retained in the lung, with manifestations of harsh breathing with profuse phlegm, rale, paroxysmal coughing with expectoration of thick yellow phlegm.

Usage and dosage 8 tablets, 3 times a day, taken after meals. 7 days making one course of treatment.

Precaution (1) It is forbidden to prescribe to pregnant women and debilitated patients with chronic diseases, or those with loose stools due to weakness of the spleen and stomach.
(2) It is normal to see loose stools and mild abdominal pain after taking it. Administer it continuously or reduce the dosage.

Strength 0.3 g per tablet

Storage Preserve in tightly closed containers.

Jufang Zhibao San
(局方至宝散)

Jufang Zhibao Powder

Ingredients Pulvis Cornus Bubali Concentratus 200 g; Calculus Bovis 50 g; Carapax Eretmochelydis 100 g; Moschus 10 g; Cinnabaris 100 g; Realgar 100 g; Succinum 100 g; Benzoinum 150 g; Borneolum Syntheticum 10 g.

Procedure Pulverize Carapax Eretmochelydis, Benzoinum and Succinum to fine powder separately. Levigate Cinnabaris and Realgar to very fine powder. Triturate Pulvis Cornus Bubali Concentratus, Calculus Bovis, Moschus and Borneolum Syntheticum with the above fine powders, sift and mix well.

Description Orange to pale brown powder; odour, strong aromatic; taste, slightly bitter.

Other requirements Comply with the general requirements for powders (Appendix Ⅰ B).

Action To clear *heat* to relieve *toxicity*, and resuscitate and relieve convulsion.

Indications Febrile diseases, invasion of the pericardium by *heat*, stirring of *wind* by intense *heat* with manifestations of convulsion due to high fever, restlessness, coma, delirium and child acute convulsion due to high fever.

Usage and dosage 2 g, once a day; 0.5 g, for children under 3 years old; 1 g, for children of 4-6 years old; or follow doctor's advice.

Strength 2 g per bottle

Storage Preserve in tightly closed containers.

Juhong Tanke Ye
(橘红痰咳液)

Juhong Tanke Mixture

Ingredients Exocarpium Citri Grandis 300 g; Radix Stemonae (stir-baked with honey) 30 g; Poria 30 g; Rhizoma Pinelliae (praeparata) 30 g; Rhizoma et Radix Cynanchi Stauntonii 50 g; Rhizoma et Radix Glycyrrhizae 10 g; Semen Armeniacae Amarum 100 g. Fructus Schisandrae Chinensis 20 g.

Procedure Distill Exocarpium Citri Grandis and Semen Armeniacae Amarum, collect 80 ml of the distillate. Decoct the residue and the other 6 ingredients with water for 2 times, 2 hours for each time, combine the decoctions and filter. Concentrate the filtrate to form a thin extract with a relative density of 1.25-1.35 (80℃), add ethanol to a content of 70%-80% ethanol, stand for 24 hours. Separate the supernatant, recover the ethanol and concentrate to form a thin extract with a relative density of 1.18-1.20 (80℃), add 400 g of sucrose, 100 g of refined honey, 3 g of benzoic acid and 0.3 g of ethyl *p*-hydroxybenzoate, stir well, add the above distillate. Mix well, filter and allow to cool, add an appropriate amount of essence and menthol, adjust the total volume to 1000 ml with water and stir well.

Description A brown liquid; odour, aromatic; taste, sweet, slightly bitter.

Identification Extract 5 ml of the mixture with 10 ml of ethyl acetate by shaking, evaporate the ethyl acetate extract to dryness and dissolve the residue in 1 ml of dehydrated ethanol as the test solution. Heat under reflux 0.3 g of the Exocarpium Citri Grandis reference drug for 20 minutes with 10 ml of methanol, filter, evaporate the filtrate to dryness and dissolve the residue in 1 ml of dehydrated ethanol as the reference drug solution. Carry out the method for thin layer chromatography (Appendix Ⅵ B), using silica gel G as the coating substance and a mixture of toluene, ethyl acetate, formic acid and water (2 : 3 : 0.3 : 0.3) as the mobile phase. Apply separately 2 μl of each of the above two solutions to the plate. After developing and removal of the plate, dry in air, spray with 3% aluminum trichloride in ethanol. Examine under ultraviolet light at 365 nm. The fluorescent spots in the chromatogram obtained with the test solution correspond in position and colour to the spots in the chromatogram obtained with the reference drug solution.

Relative density Not less than 1.16 (Appendix Ⅶ A).

pH value 4.0-6.0 (Appendix Ⅶ G).

Other requirements Comply with the general requirements for mixtures (Appendix Ⅰ J).

Assay Carry out the method for high performance liquid chromatographys (Appendix Ⅵ D).

Chromatographic system and system suitability Use octadecylsilane bonded silica gel as the stationary phase and a mixture of methanol, water and glacial acetic acid (70 : 130 : 3) as the mobile phase. As detector a spectrophotometer set at 283 nm. The number of the theoretical plates of the column is not less than 4500, calculated with the reference to the peak of naringin.

Reference solution Weigh accurately 10 mg of naringin CRS, dried previously to constant weight at 110℃, in a 50 ml volumetric flask, dilute with methanol to volume, and mix well. Measure accurately 3 ml in a 10 ml volumetric flask, dilute with methanol to volume, and mix well

(containing 60 μg of naringin per ml).

Test solution Measure accurately 10 ml of the mixture, extract the mixture with six 10-ml quantities of ethyl acetate by shaking, combine the ethyl acetate extract, recover to dryness. Dissolve the residue in methanol and transfer to 100 ml volumetric flask, dilute with methanol to volume, and mix well, and filter the supernatant, use the successive filtrate as the test solution.

Procedure Inject accurately 10 μl of each of the reference solution and the test solution into the column, and calculate the content.
It contains not less than 1.0 mg of naringin ($C_{27}H_{32}O_{14}$) per ml, referred to Exocarpium Citri Grandis.

Action To regulate *qi* flow and resolve phlegm, and moisten the lung and stop coughing.

Indications Coughing with expectoration of copious phlegm and shortness of breath due to block of the lung by phlegm; common cold, bronchitis, pharyngitis and laryngitis with above symptoms.

Usage and dosage 10-20 ml, 3 times a day.

Precaution Contraindicated for patients with external *wind-heat*.

Strength 10 ml per vial

Storage Preserve in tightly closed containers.

Juhong Wan
(橘红丸)

Juhong Pills

Ingredients Exocarpium Citri Grandis 75 g; Pericarpium Citri Reticulatae 50 g; Rhizoma Pinelliae (processed) 37.5 g; Poria 50 g; Radix et Rhizoma Glycyrrhizae 25 g; Radix Platycodonis 37.5 g; Semen Armeniacae Amarum 50 g; Fructus Perillae (stir-baked) 37.5 g; Radix et Rhizoma Asteris 37.5 g; Flos Farfarae 25 g; Pericarpium Trichosanthis 50 g; Bulbus Fritillariae Thunbergii 50 g; Radix Rehmanniae 50 g; Radix Ophiopogonis 50 g; Gypsum Fibrosum 50 g.

Procedure Pulverize the above fifteen ingredients to fine powder, sift, mix well. To each 100 g of powder add 20-30 g of refined honey and a quantity of water to make water-honeyed pill and dry; or add 90-110 g of refined honey to make small honeyed pills or big honeyed pills.

Description Brown water-honeyed pills, small honeyed pills or big honeyed pills; odour, slightly aromatic, taste, sweet and slightly bitter.

Identification (1) Microscopical: Irregular branched masses colourless, dissolved in chloral hydrate TS; hyphae colourless or pale brown, 4-6 μm in diameter. Fibre bundles surrounded by parenchymatous cells containing prisms of calcium oxalate, forming crystal fibres. Stone cells orange, mussel-shaped, walls relatively thickened, pits distinct at the broader side. Cells of testa subrounded, oblong or irregular, walls thickened reticulately, like flowerage striations. Pollen grains globular, up to about 32 μm in diameter, with sharper spines on the extine. Hypodermis cells rectangular, anticlinal walls sinuous, some cells containing violet pigments.
(2) Heat under reflux 5 g of the small or big honeyed pills, cut into pieces and ground well with 3 g of kieselguhr, or 3.6 g of the pulverized water-honeyed pills, with 40 ml of ethyl acetate for 1 hour, allow to stand to cool, filter, evaporate the filtrate to dryness and dissolve the residue in 1 ml of methanol as the test solution. To 1 g of Pericarpium Citri Reticulatae reference drug, add 10 ml of methanol, ultrasonicate for 10 minutes, filter and use the filtrate as the reference drug solution. Carry out the method for thin layer chromatography (Appendix Ⅵ B), using silica gel G as the coating substance and a mixture of chloroform and methanol (19 : 1) as the mobile phase. Apply separately 5 μl of the test solution and 2 μl of the reference drug solution to the plate. After developing and removal of the plate, dry in air and examine under ultraviolet light at 365 nm. The main fluorescent spots in the chromatogram obtained with the test solution correspond in position and colour to the spots in the chromatogram obtained with the reference drug solution.
(3) Triturate well 6 g of the small or big honeyed pills, or 3.6 g of the water-honeyed pills with 30 ml of water, add 1 ml of hydrochloric acid and heat under reflux for 1 hour. Allow to stand to cool, filter and transfer the filtrate to a separating funnel. Extract with two 30-ml quantities of chloroform by shaking, combine the chloroform extracts, evaporate to dryness, dissolve the residue in 2 ml of chloroform as the test solution. Prepare a solution of 1 g of Radix Ophiopogonis reference drug and 30 ml of water in the same manner as the reference drug solution. Carry out the method for thin layer chromatography (Appendix Ⅵ B), using silica gel G as the coating substance and a mixture of chloroform and acetone (4 : 1) as the mobile phase. Apply separately 5 μl of the test solution, 2 μl of the reference drug solution to the plate. After developing and removal of the plate, dry in air. Spray with 10% sulfuric acid in ethanol, heat at 105℃ to spots clear. The deep green spots in the chromatogram obtained with the test solution correspond in position and colour to the spots in the chromatogram obtained with the reference drug solution.

Other requirements Comply with the general requirements for pills (Appendix Ⅰ A).

Assay Carry out the method for high performance liquid chromatography (Appendix Ⅵ D).

Chromatographic system and system suitability Use octadecylsilance bonded silica gel as the stationary phase and a mixture of methanol, acetic acid and water (30 : 4 : 60) as the mobile phase. As detector a spectrophotometer set at 283 nm. The number of theoretical plates of the column is not less than 2000, calculated with the reference to the peak of naringin.

Reference solution Weigh accurately a quantity of naringin CRS, dried previously to constant weight at 110℃, add methanol to prepare a solution containing 70 μg per ml.

Test solution Pulverize a quantity of water-honeyed pills to powder, weigh accurately 1.5 g of powder; or cut a quantity of small honeyed pills and big honeyed pills, obtained under the test of variation weight, into pieces, and weigh accurately 2 g. Place the powder or pieces of pills to a stopper conical flask, add accurately 50 ml of the solution of mobile phase, stopper closely and weigh. Allow disintegrating thoroughly, ultrasonicate (power, 250 W; frequency, 20 kHz) for 30 minutes, allow standing to cool, Weigh again and replenish the loss of the weight with the solution of mobile phase, Mix well; filter; if difficult to filter, then centrifuge and filter the supernatant, use the successive filtrate as the test solution.

Procedure Inject accurately 10 μl of the reference solution and 10-20 μl of the test solution into the column, and calculate the content.
It contains not less than 1.0 mg of naringin ($C_{27}H_{32}O_{11}$) per gram for water-honeyed pills; or not less than 0.6 mg per gram for small honeyed pills; or not less than 1.9 mg per

pill for the strength of 3 g of big honeyed pills, not less than 3.8 mg per pill for the strength of 6 g of big honeyed pills; all referred to Exocarpium Citri Grandis.

Action To clear the lung and resolve phlegm, and relieve coughing.

Indications Coughing with copious yellow sticky phlegm and constriction in the chest and dry mouth.

Usage and dosage 7.2 g of water-honeyed pills, 12 g of small honeyed pills or 2 big honeyed pills (the strength of 6 g per big honeyed pill) or 4 big honeyed pills (the strength of 3 g per big honeyed pill), twice a day.

Strength 10 g per 100 water-honeyed pills; 3 g or 6 g per big honeyed pill

Storage Preserve in tightly closed containers.

Kaixiong Shunqi Wan
(开胸顺气丸)

Kaixiong Shunqi Pills

Ingredients Semen Arecae 300 g; Semen Pharbitidis (stir-baked) 400 g; Pericarpium Citri Reticulatae 100 g; Radix Aucklandiae 75 g; Cortex Magnoliae Officinalis (processed with ginger) 100 g; Rhizoma Sparganii (processed with vinegar) 100 g; Rhizoma Curcumae (processed with vinegar) 100 g; Fructus Gleditsiae Abnormalis 50 g.

Procedure Pulverize the above eight ingredients to fine powder, sift and mix well, make pills with water and dry at a low temperature.

Description Pale brown to brown watered pills; taste, slightly bitter and pungent.

Identification (1) Microscopical: Gelatinized starch masses pale yellowish. Fragments of endosperm cells colourless, with relatively thickened walls and subrounded pits. Palisade cells of testa brownish or purplish-brown, 48-80 μm long. Prisms of calcium oxalate abundant in parenchyma. Fibre bundles pale yellow, surrounded by cells containing prisms and less clusters of calcium oxalate, forming crystal fibres, and often accompanied with subsquare sclerenchymatous cells. Stone cells branched, with thickened walls and distinct striations. Secretory cells containing reddish-brown or yellowish-brown secretion.

(2) To 4 g, cut into pieces, add 20 ml of chloroform and 3 ml of concentrated ammonia TS, heat under reflux for 1 hour and filter. To the filtrate add 5 ml of dilute hydrochloric acid TS and 20 ml of water, and shake. Separate the aqueous layer, add concentrated ammonia TS to adjust pH value to 8-9, and extract with two 5-ml quantities of chloroform. Separate the chloroform layer, evaporate to dryness, dissolve the residue in 0.2 ml of methanol as the test solution. Prepare a solution with 1 g of Semen Arecae reference drug in the same manner as the reference drug solution. Carry out the method for thin layer chromatography (Appendix Ⅵ B), using silica gel G mixed with 1% solution of sodium hydroxide as the coating substance and the lower layer of a mixture of chloroform, ethyl acetate, methanol and water (2 : 4 : 2 : 1) as the mobile phase. Apply separately 5 μl of each of the two solutions to the plate. After developing and removal of the plate, dry in air, spray with 10% potassium iodobismuthate TS. The orange spots in the chromatogram obtained with the test solution correspond in position and colour to the spots in the chromatogram obtained with the reference drug solution.

(3) To 3 g, cut into pieces, macerate in 25 ml of methanol for 30 minutes with constant shaking. Filter, evaporate the filtrate to about 1 ml as the test solution. Dissolve magnolol CRS and honokiol CRS in methanol to produce a mixture containing 1 mg each per ml as the reference solution. Carry out the method for thin layer chromatograph (Appendix Ⅵ B), using silica gel GF_{254} mixed with 1% solution of sodium hydroxide as the coating substance and a mixture of benzene and ethyl acetate (6 : 1) as the mobile phase. Apply separately 4 μl of the test solution and 2 μl of the reference solution to the plate. After developing and removal of the plate, dry in air, and examine under ultraviolet light at 254 nm. The spots in the chromatogram obtained with the test solution correspond in position and colour to the spots in the chromatogram obtained with the reference solution. Spray with 5% vanillin in sulfuric acid and heat at 80℃ for several minutes to spots clear. The colour of the spots turns purplish-red to purplish-brown.

(4) Grind 4 g, add 30 ml of 2 mol/L solution of hydrochloric acid in ethanol, heat under reflux for 1.5 hours, and filter. To the filtrate add 40 ml of water, evaporate on a water bath until no ethanol is smelled. Transfer the aqueous solution to a separating funnel, extract with 30 ml of benzene, allow to stand, separate the benzene layer, and filter. Evaporate the filtrate to dryness, dissolve the residue in 1 ml of dehydrated ethanol as the test solution. Prepare a solution of 1 g of Semen Pharbitidis reference drug in the same manner as the reference drug solution. Carry out the method for thin layer chromatography (Appendix Ⅵ B), using silica gel G as the coating substance and a mixture of cyclohexane and ethyl acetate (9 : 1) as the mobile phase. Apply separately 5-10 μl of each of the two solutions to the plate. After developing and removal of the plate, dry in air. Spray with 5% vanillin in sulfuric acid and heat at 105℃ to spots clear. The yellow spots in the chromatogram obtained with the test solution correspond in position and colour to the spots in the chromatogram obtained with the reference drug solution.

(5) Triturate 3 g of pills, add 20 ml of methanol, ultrasonicate for 20 minutes, and filter. Evaporate the filtrate to dryness, and dissolve the residue in 20 ml of water, adjust pH value to 1-2 with hydrochloric acid, extract with two 20-ml quantities of ethyl acetate, combine the ethyl acetate extracts. Evaporate to dryness, and dissolve the residue in 1 ml of methanol as the test solution. Dissolve a quantity of hesperidin CRS in methanol to prepare a saturated solution as the reference solution. Carry out the method for thin layer chromatography (Appendix Ⅵ B), using silica gel G mixed with sodium carboxymethyl cellulose as the coating substance and a mixture of chloroform, methanol and water (28 : 10 : 1) as the mobile phase. Apply separately 4-8 μl of each of the above two solutions to the plate. After developing and removal of the plate, dry in air. Spray with 1% aluminum trichloride in ethanol. Examine under ultraviolet light at 365 nm, the fluorescent spot in the chromatogram obtained with the test solution corresponds in position and colour to the spot in chromatogram obtained with the reference solution.

(6) Triturate 3 g of pills, heat under reflux with 25 ml of chloroform for 30 minutes, and filter. Evaporate the filtrate to dryness, and dissolve the residue in 1 ml of ethyl acetate as the test solution. Prepare a solution of 1 g of Radix Aucklandiae reference drug and 15 ml of chloroform in the same manner as the reference drug solution. Carry out the method for thin layer chromatography (Appendix Ⅵ B), using silica gel G mixed with sodium carboxymethyl cellulose as the coating substance and a mixture of cyclohexane and acetone (10 : 3) as the mobile phase. Apply separately 1-3 μl of each of the above two solutions to the plate. After developing and removal of the plate, dry in air. Spray with

5% vanillin in sulfuric acid. The spots in the chromatogram obtained with the test solution correspond in position and colour to the spots in chromatogram obtained with the reference drug solution.

Other requirements Comply with the general requirements for pills (Appendix Ⅰ A).

Assay Carry out the method for high performance liquid chromatography (Appendix Ⅵ D).

Chromatographic system and system suitability Use octadecylsilane bonded silica gel as the stationary phase and a mixture of acetonitrile, water and glacial acetic acid (60 : 38 : 2) as the mobile phase. As detector a spectrophotometer set at 294 nm. The number of the theoretical plates of the column is not less than 3000, calculated with the reference to the peak of magnolol.

Reference solution Dissolve separately a quantity of magnolol CRS and honokiol CRS, weighed accurately, in methanol to prepare two kinds of reference solutions, containing 40 μg of magnolol per ml and 20 μg of honokiol per ml.

Test solution Triturate a quantity of pills to fine powder. Weigh accurately 2 g, place to a stopper conical flask, add exactly 50 ml of methanol and weigh. Ultrasonicate for 40 minutes and allow standing to cool. Weigh again and replenish the lost weight with methanol, mix well and filter. Measure accurately 10 ml of the successive filtrate, evaporate the filtrate to dryness. Dissolve the residue with 20 ml of solution of hydrochloric acid (1→10), in portions, and transfer to a separator. Then dissolve the residue with 15 ml of chloroform, in portions, and transfer to the same separator, extract by shaking. Separate the chloroform solution for later use, extract the water solution with two 15-ml quantities of chloroform. Combine the chloroform solution; wash with 20 ml of water. Extract the washing with 10 ml of chloroform. Combine the chloroform extracts, recover the solvent to dryness. Dissolve the residue in 90% methanol, by slightly heating if necessary, and transfer to a 10 ml volumetric flask. Dilute with methanol to volume, and mix well.

Procedure Inject accurately 10 μl of each of the reference solution and the test solution into the column, and calculate the content.

It contains not less than 1.1 mg of the total amount of magnolol ($C_{18}H_{18}O_2$) and honokiol ($C_{18}H_{18}O_2$) per 1 g, referred to Cortex Magnoliae.

Action To remove retained, undigested food, and promote *qi* flow to kill pain.

Indications Fullness in the chest and hypochondria, gastric pain, belching, nausea, vomiting and anorexia due to stagnation of *qi* and retained food.

Usage and dosage 3-9 g, 1-2 times a day.

Precaution Contraindicated for pregnant women; be cautious about aged and debilitated patients.

Storage Preserve in well closed containers, protected from moisture.

Kanggan Keli
(抗感颗粒)

Kanggan Granules

Ingredients Flos Lonicerae Japonicae 700 g; Radix Paeoniae Rubra 700 g; Rhizoma Dryopteridis Crassirhizomae 233 g.

Procedure Decoct the above three ingredients twice for 1.5 hours each, combine the decoctions, filter, concentrate the filtrate to 830 ml, add ethanol to prepare a solution containing 50% of ethanol, stir well, stand overnight, filter, concentrate the filtrate to an appropriate amount. Make granules with a quantity of sucrose and dextrin, dry, and make to 1000 g of granules.

Description Yellowish-brown granules; taste, sweet, slightly bitter.

Identification (1) To 4 g, pulverize to fine powder, add 15 ml of ethyl acetate, heat under reflux on a water bath for 1 hour, cool, and filter. Evaporate the filtrate to dryness, and dissolve the residue in 1 ml of methanol as the test solution. Dissolve a quantity of chlorogenic acid CRS in methanol to prepare a solution containing 1 mg per ml as the reference solution. Carry out the method for thin layer chromatography (Appendix Ⅵ B), using silica gel G mixed with sodium carboxymethylcellulose as the coating substance and the upper layer of a mixture of butyl acetate, formic acid and water (14 : 5 : 5) as the mobile phase. Apply separately 10 μl of the test solution and 2 μl of the reference solution to the plate. After developing and removal of the plate, dry in air. Examine under ultraviolet light at 365 nm, the fluorescent spot in the chromatogram obtained with the test solution corresponds in position and colour to the spot in the chromatogram obtained with the reference solution.

(2) Ultrasonicate 1 g of granules with 25 ml of methanol for 10 minutes, and filter. Evaporate the filtrate to dryness, and dissolve the residue in 1 ml of ethanol as the test solution. Dissolve a quantity of paeoniflorin CRS in ethanol to prepare a solution containing 1 mg per ml as the reference solution. Carry out the method for thin layer chromatography (Appendix Ⅵ B), using silica gel G mixed with sodium carboxymethylcellulose as the coating substance and a mixture of chloroform, ethyl acetate, methanol and formic acid (40 : 5 : 10 : 0.2) as the mobile phase. Apply separately 5 μl of each of the above two solutions to the plate. After developing and removal of the plate, dry in air. Spray with 5% vanillin in sulfuric acid, and heat at 105℃ to the spots clear. The spot in the chromatogram obtained with the test solution corresponds in position and colour to the spot in the chromatogram obtained with the reference solution.

Other requirements Comply with the general requirements for granules (Appendix Ⅰ Ç).

Assay Carry out the method for high performance liquid chromatography (Appendix Ⅵ D).

Chromatographic system and system suitability Use octadecylsilane bonded silica gel as the stationary phase and a mixture of methanol, water and glacial acetic acid (30 : 70 : 0.5) as the mobile phase. As detector a spectrophotometer set at 230 nm. The number of the theoretical plates of the column is not less than 4000, calculated with the reference to the peak of paeoniflorin.

Reference solution Dissolve a quantity of paeoniflorin CRS, accurately weighed, in 20% methanol to prepare a solution containing 64 μg per ml.

Test solution Pulverize granules, obtained under the test of weight variation, to fine powder. Weight accurately 0.6 g of the powder, place to a stopper conical flask, add accurately 50 ml of methanol and weigh. Ultrasonicate (power, 250 W; frequency, 33 kHz) for 10 minutes, allow to cool, weigh again and replenish the lost weight with methanol, mix well and filter. Measure accurately 10 ml of the successive filtrate, evaporate the filtrate to dryness. Dissolve the residue in 20% methanol and transfer to a 10 ml

volumetric flask, dilute with 20% methanol to volume, and mix well, Filter and use the successive filtrate as the test solution.

Procedure Inject accurately 10 μl of each of the reference solution and the test solution into the column, and calculate the content.
It contains not less than 55.0 mg of paeoniflorin ($C_{23}H_{28}O_{11}$) per pack, referred to Radix Paeoniae Rubra.

Action To clear *heat* to relieve *toxicity*.

Indications Common cold due to affliction from external *wind-heat*, with manifestations of fever, Fever, headache, stuffy nose, sneezing, sore throat, lassitude and aching pain.

Usage and dosage 10 g, 3 times a day, taken with boiled water. Appropriately reduce the dosage for children or follow doctor's advice.

Precaution Be cautious about pregnant women.

Strength 10 g per pack

Storage Preserve in tightly closed containers.

Kanggu Zengsheng Jiaonang (抗骨增生胶囊)

Kanggu Zengsheng Capsules

Ingredients Radix Rehmanniae Praeparata 175 g; Caulis Spatholobi 117 g; Herba Cistanches (steamed with wine) 117 g; Semen Raphani (stir-backed) 58 g; Rhizoma cibotii (processed with salt) 117 g; Rhizoma Drynariae 117 g; Fructus Ligustri Lucidi (processed with salt) 58 g; Radix Achyranthis Bidentatae 117 g; Herba Epimedii 117 g.

Precedure Pulverize 117 g of Radix Rehmanniae Praeparata, 58 g of Rhizoma cibotii and Herba Epimedii to fine powder. Decoct the other six ingredients and the remained portion of Radix Rehmanniae Preparata and Herba Epimedii twice, 1.5 hours each. Filter, combine the filtrates and concentrate to a quantity, add the above fine powder and a quantity of excipient, mix well, dry, pulverize, make granules, and make to 1000 capsules.

Description Hard capsules with brownish-yellow to brownish-black granules and powders; taste, sweet, slightly astringent or slightly bitter and astringent.

Identification (1) Microscopical: Parenchyma brown to blackish-brown, cells mostly shrunken, and each containing a brown nucleous-like mass. Scalariform tracheid pale yellow to golden yellow, pits tidely-arranged. Epidermal cells of leaf with deep sinuous walls.
(2) Extract 4 g of the content with 30 ml of methanol under reflux on a water bath for 1 hour, filter, and evaporate the filtrate to dryness. Dissolve the residue in 30 ml of 25% solution of sulfuric acid, heat under reflux for 2 hours, cool, extract with two 30-ml quantities of ether by shaking. Combine the ether extracts, evaporate to dryness, and dissolve the residue in 2 ml of ethanol as the test solution. Prepare a solution with 2 g of Radix Acanthopanacis Bidentatae reference drug in the same manner as the reference drug solution. Carry out the method for thin layer chromatography (Appendix Ⅵ B), using silica gel G mixed with sodium carboxymethylcellulose as the coating substance and a mixture of toluene, ethyl acetate and formic acid (4 : 1 : 0.5) as the mobile phase. Apply separately 10 μl of each of the two solutions to the plate. After developing and removal of the plate, dry in air, spray with 10% sulfuric acid in ethanol and heat to the spots clear. The spots in the chromatogram obtained with the test solution correspond in position and colour to the spots in the chromatogram obtained with the reference drug solution.
(3) Evaporate 10 ml of the test solution, obtained in the test of Assay, to dryness, dissolve the residue in 2 ml of methanol as the test solution. Dissolve epimedoside CRS in methanol to prepare a solution containing 0.5 mg per ml as the reference solution. Carry out the method for thin layer chromatography (Appendix Ⅵ B), using silica HF_{254} mixed with sodium carboxymethylcellulose as the coating substance and a mixture of ethyl acetate, acetone, methanol and water (10 : 1 : 1.5 : 1) as the mobile phase. Apply separately 10 μl of each of the two solutions to the plate. After developing and removal of the plate, dry in air, examine under ultraviolet light at 254 nm. The spot in the chromatogram obtained with the test solution corresponds in position and colour to the spot in the chromatogram obtained with the reference solution.

Other requirements Comply with the general requirements for capsules (Appendix Ⅰ L).

Assay Carry out the method for high performance liquid chromatography (Appendix Ⅵ D).

Chromatographic system and system suitability Use octadecylsilane bonded silica gel as the stationary phase and a mixture of acetonitrile and water (30 : 70) as the mobile phase. As detector a spectrophotometer set at 270 nm. The number of theoretical plates of the column is not less than 1500, calculated with the reference to the peak of icariine.

Reference solution Dissolve a quantity of icariine CRS, accurately weighed, in methanol to prepare a solution containing 20 μg per ml as the reference solution.

Test solution Grind the content, obtained under the test of weight variation, to fine powder, weigh accurately 1 g in a 100 ml stopper conical flask, add accurately 50 ml of dilute ethanol TS, stopper tightly, and weigh. Ultrasonicate (power, 250 W; frequency, 33 kHz) for 1 hour, cool, weigh again, replenish the loss of weight with dilute ethanol TS, and shake well. Filter and use the successive filtrate as the test solution.

Procedure Inject accurately 20 μl of each of the reference solution and the test solution into the column, and calculate the content.
It contains not less than 0.30 mg of icariine ($C_{33}H_{40}O_{15}$) per capsule, referred to Herba Epimedii.

Action To reinforce the lower back and kidney, strengthen the tendons and bones and promote blood circulation to kill pain.

Indications Osteoarthritis due to deficiency in the liver and kidney and meridians obstructed by blood stasis with manifestations of swollen numb joints pain and immobilization.

Usage and dosage 5 capsules, 3 times a day.

Strength 0.35 g per capsule

Storage Preserve in tightly closed containers.

Kanggu Zengsheng Wan (抗骨增生丸)

Kanggu Zengsheng Pills

Ingredients Radix Rehmanniae Praeparata 210 g; Herba Cistanches (steamed) 140 g; Rhizoma Cibotii (Processed with salt) 140 g; Fructus Ligustri Lucidi (processed with

salt) 70 g; Herba Epimedii 140 g; Caulis Spatholobi 140 g; Semen Raphani (stir-baked) 70 g; Rhizoma Drynariae 140 g; Radix Achyranthis Bidentatae 140 g.

Procedure Pulverize 70 g of Rhizoma Cibotii, 140 g of Radix Rehmanniae Praeparata and 70 g of Herba Epimedii to fine powder. Decoct the remains of Radix Rehmanniae Praeparata and Herba Epimedii and the other six ingredients with water twice, combine the decoctions, filter, concentrate the filtrate to a thick extract, mix with the above fine powder, dry and pulverize to fine powder, sift, and mix well. To each 100 g of the powder add 20-30 g of refined honey and a quantity of water to make water-honeyed pills, coat with carbonized Radix Glycyrrhizae, polish and dry, alternatively, add 55-65 g of refined honey to make small honeyed pills or big honeyed pills.

Description Black concentrated water-honeyed pills, concentrated small honeyed pills or concentrated big honeyed pills; taste; sweet, slightly astringent.

Identification (1) Microscopical: Parenchyma greyish-brown to blackish-brown, cells mostly shrunken, containing brown nucleus-like mass. Scalariform tracheids pale yellow to golden yellow, pits arranged regularly. Epidermal cell of leaf with deeply sinuous walls.
(2) To 6 g add 25 ml of 70% acidic ethanol solution, reflux on a water bath for 15 minutes, filter, evaporate 5 ml of the filtrate on a water bath to dryness, dissolve the residue in 5% solution of sulfuric acid, filter, transfer 3 ml of the filtrate into 3 test tubes, 1 ml for each tube. Add 1-2 drops of potassium iodobismuthate TS to one tube, a red precipitate is produced. To the second tube add 1-2 drops of mercuric potassium iodide TS, a white precipitate is produced. Add 1-2 drops of silicowolframic acid TS to the third tube, a white precipitate is produced.
(3) Macerate 6 g in 10 ml of methanol for 2 hours and filter. To 1 ml of the filtrate add 3-4 drops of hydrochloric acid and a small amount of magnesium, heat on a boiling water bath for 3 minutes; a reddish-brown colour is produced.

Other requirements Comply with the general requirements for pills (Appendix Ⅰ A).

Action To reinforce the lower back and kidney, strengthen the tendons and bones and promote blood circulation to kill pain.

Indications Osteoarthritis due to deficiency in the *liver* and kidney and meridians obstructed by blood stasis with manifestations of swollen numb joints, pain and immobilization.

Usage and dosage 2.2 g of water-honeyed pills, 3 g of small honeyed pills or 1 big honeyed pill; 3 times a day.

Strength 3 g per big honeyed pill

Storage Preserve in tightly closed containers.

Kanlisha
(坎离砂)

Kanli Coarse Powder

Ingredients Radix Angelicae Sinensis 3.75 g; Rhizoma Chuanxiong 5.0 g; Radix Saposhnikoviae 5.0 g; Caulis Impatientis Balsaminae 5.0 g.

Procedure Pulverize the above four ingredients to coarse powder, add a quantity of Pulvis Ferri, wood powder, active carbon and sodium chloride mix well, make to 1000 g of powder.

Description A blackish-brown coarse powder; texture heavy.

Identification Place 1 pack of the content into a stopper conical flask, add 60 ml of ether, heat under reflux for 30 minutes, and filter. Evaporate the filtrate to 1 ml as the test solution. To 0.5 g each of Radix Angelicae Sinensis reference drug and Rhizoma Chuanxiong reference drug, add respectively 20 ml of ether to prepare two kinds of solutions in the same manner as the reference drug solutions. Carry out the method for thin layer chromatography (Appendix Ⅵ B), using silica H mixed with sodium carboxymethyl cellulose as the coating substance and a mixture of petroleum ether (60-90℃) and ethyl acetate (19 : 1) as the mobile phase. Apply separately 8 μl of the test solution and 4 μl of each of the reference drug solution to the plate. After developing and removal of the plate, dry in air. Examine under ultraviolet light at 365 nm, the major fluorescent spots in the chromatogram obtained with the test solution correspond in position and colour to the spots in chromatogram obtained with the reference drug solutions.

Heating effect To 2 packs, remove the outside packaging, oscollate for 10-15 minutes, put the side without hole complete together, insert a thermometer (0-100℃, graduated in ±1℃ subdivisions) and set the mercury bulb in the central part between the two packs, fix up with tape, cover with 3 towels, respective, place on a wooden desk. Examine the result every 30 minutes, the highest temperature should not less than 75℃.

Action To expel *wind* and *cold*, and promote blood circulation to kill pain.

Indications Impediment diseases due to *wind*, *cold* and *dampness* with manifestations of numbness of limbs, arthralgia, or cold pain in the stomach and abdomen.

Usage and dosage For external use. To shake the pack until it gets warm, and apply it to the affected part. 1 pack each time.

Precaution For external use only, never for per os; contraindicated for pregnant women.

Strength Each carton cylinder contains 62.5 g of the powder

Storage Preserve in tightly closed containers, protected from sunlight.

Keshangtong Chaji
(克伤痛搽剂)

Keshangtong Liniment

Ingredients Radix Angelicae Sinensis; Radix Chuanxiong; Flos Carthami; Flos Caryophylli; Rhizoma Zingiberis Recens; Camphor; Oleum Terebinthinae.

Procedure To Rhizoma Zingiberis Recens, cut into pieces, macerate with 70% ethanol for 48 hours, filter and reserve the filtrate for later use. Pulverize Radix Angelicae Sinensis, Radix Chuanxiong, Flos Carthami and Flos Caryophylli to coarse powder, then combine with the above residue of Rhizoma Zingiberis Recens; carry out the method for percolation described under liquid extracts and extracts (Appendix Ⅰ O), using 75% ethanol as solvent to macerate for 48 hours and then to take percolating. Collect the percolations and concentrate to a appropriate amount, filter; combine this filtrate with the above reserved filtrate. Dissolve Camphor and Oleum Terebinthinae in ethanol, add the filtrate and 70% ethanol to regular volume; mix thoroughly, seal. Allow to stand and filter.

Description A clear, reddish-brown colour liquid; odour,

aromatic.

Identification (1) Evaporate 30 ml of the liniment to dryness on a water bath, dissolve the residue in 30 ml of water by heating lightly. Allow standing to cool, then transfer to a separating funnel; extract with two 20-ml quantities of ether, combine ether extracts and evaporate to dryness; dissolve the residue in 1 ml of methanol as the test solution. Dissolve a quantity of ferulic acid CRS in methanol to prepare a solution containing 0.5 mg per ml as the reference solution. Carry out the method for thin layer chromatography (Appendix Ⅵ B), using silica gel G as the coating substance and a mixture of ether, chloroform and formic acid (10 : 50 : 1) as the mobile phase. Apply separately 10 μl of each of the test solution and the reference solution to the plate. After developing and removal of the plate, dry in air. Examine under ultraviolet light at 365 nm. The fluorescent spot in the chromatogram obtained with the test solution corresponds in position and colour to the spot obtained with the reference solution.
(2) Place 10 ml of the liniment, evaporate the ethanol on a water bath, extract the residue with 10 ml of ether, evaporate the extract to about 2 ml as the test solution. Dissolve a quantity of eugenol CRS in ether to prepare a solution containing 15 μl per ml as the reference solution. Carry out the method for thin layer chromatography (Appendix Ⅵ B), using silica gel G as the coating substance and a mixture of petroleum ether (60-90℃) and ethyl acetate (9 : 1) as the mobile phase. Apply separately 10 μl of each of the reference solution and the test solution to the plate. After developing and removal of the plate, dry in air. Spray with 5% vanillin in sulfuric acid, and heat at 105℃ to the spots clear. The spot in the chromatogram obtained with the test solution corresponds in position and colour to the spot obtained with the reference solution.

Ethanol content 60 per cent to 70 per cent (Appendix Ⅸ M).

Total solids Measure accurately 25 ml of the liniment in a evaporating dish, previously dried to constant weight, evaporate to dryness on a water bath. Dry the residue at 105℃ for 3 hours, allow to stand to cool in a desiccator for 30 minutes and weigh immediately. The residue is not less than 1.5 per cent.

Other requirements Comply with the general requirements for liniments (Appendix Ⅰ V).

Assay Carry out the method for gas chromatography (Appendix Ⅵ E).

Chromatographic system and system suitability Use 10% macrogol 20000 (PEG-20M) as the stationary phase. Column temperature gradient: initial temperature at 125℃, maintain 6 minutes; increase at 8℃ per minute to 175℃, then maintain 17 minutes. The number of theoretical plates of the column is not less than 2900, calculated with the reference to the peak of camphor.

Correction factor Dissolve a quantity of biphenyl in ethanol to prepare a solution containing 9 mg per ml as internal standard solution. Dissolve a quantity of camphor CRS and eugenol CRS in ethanol separately to prepare two kinds of solutions containing 10 mg of camphor and 6 mg of eugenol per ml as the reference solutions. Transfer accurately 1 ml of each of the above three kinds of solutions to a 10 ml volumetric flask, dilute with ethanol to volume, mix thoroughly. Inject accurately 1 μl of this solution into the column; calculate the correction factor for camphor and eugenol separately.

Procedure Place 5 ml of the liniment, measured accurately, to a 10 ml volumetric flask, add accurately 1 ml of the internal standard solution, dilute with 70% ethanol to volume and mix thoroughly. Inject accurately 1 μl of the solution into the column, and calculate the content.
It contains not less than 1.7 mg and no more than 2.3 mg of camphor ($C_{10}H_{16}O$) per ml; and not less than 0.45 mg of eugenol ($C_{10}H_{12}O_2$) per ml, referred to Flos Caryophylli.

Action To promote blood circulation to resolve stagnated blood and reduce swelling to kill pain.

Indications Acute soft tissue injury with manifestations of purpura and hematoma with pain.

Usage and dosage For external use, spread on the affected part and do rubbing until the skin became warm, 2-3 times a day.

Strength (1) 30 ml per bottle (2) 40 ml per bottle
(3) 100ml per bottle

Storage Preserve in tightly closed containers.

Kongxian Wan
(控涎丸)

Kongxian Pills

Ingredients Radix Kansui (processed with vinegar) 300 g; Radix Knoxiae 300 g; Semen Sinapis Albae 300 g.

Procedure Pulverize the above three ingredients to fine powder, sift, mix well, make pills with dilute rice paste prepared from 240 g of rice powder or yellow rice powder and water, and dry.

Description Dark brown pasted pills with pale yellow spots on the surface; taste, slightly pungent.

Identification Microscopical: Acondylose laticiferous tubes occurring in parenchyma. Pigment cells yellowish-brown or reddish-brown, oblong or tubular; needle crystals of calcium oxalate in bundles or scattered. Palisade cells of testa small, polygonal, in surface view, with thickened walls; subrectangle in lateral view, the lateral and inner walls thickened.

Other requirements Comply with the general requirements for pills (Appendix Ⅰ A).

Action To eliminate *phlegm* and expel morbid fluid.

Indications Dull pain in the chest aggravated by coughing and asthma, difficulty in expectoration of phlegm, scrofula, or subcutanous nodules due to accumulation of phlegm-fluid in the chest.

Usage and dosage 1-3 g, 1-2 times a day, to be taken with warm boiled water, date soup or rice soup.

Precaution Contraindicated for pregnant women; be cautious about debilitated patients.

Storage Preserve in well closed containers, protected from moisture.

Kouyanqing Keli
(口炎清颗粒)

Kouyanqing Granules

Ingredients Radix Asparagi; Radix Ophiopogonis; Radix Scrophulariae; Flos Lonicerae Japonicae; Radix et Rhizoma Glycyrrhizae.

Procedure Decoct the above five ingredients with water

twice, 2 hours for the first time, 1.5 hours for the second time. Combine the decoctions, and filter. Concentrate the filtrate to a thin extract with a relative density of 1.29 (80℃), add ethanol to a content of 50%, allow to stand over 12 hours. Separate the supernatant, filter, recover ethanol, and concentrate to a thick extract. Add a quantity of sucrose and dextrin, make granules, dry, and make to 1000 g granules; or add a quantity of soluble starch, dextrin, and aspartame, make granules, dry, and make to 300 g granules without sucrose.

Description Brownish-yellow to dark brown granules; taste, sweet or slightly sweet (granules without sucrose), slightly bitter.

Identification (1) To 1 pack of the granules, add 30 ml of methanol, ultrasonicate for 15 minutes, filter, evaporate the filtrate to dryness, dissolve the residue in 2 ml of methanol as the test solution. To 0.5 g of Radix et Rhizoma Glycyrrhizae reference drug, decoct with 50 ml of water for 30 minutes, allow to cool and filter. Add the same volume of dehydrated ethanol, mix well and centrifuge. Separate the supernatant, and evaporate to dryness, dissolve the residue in 2 ml of methanol as the reference drug solution. Carry out the method for thin layer chromatography (Appendix Ⅵ B), using silica gel G as the coating substance and a mixture of toluene, ethyl formate, and formic acid (15 : 8 : 1.5) as the mobile phase. Apply separately 4 μl of each of the test solution and the reference drug solution to the plate. After developing about 15 cm, remove the plate, dry in air. Examine under the ultraviolet light at 365 nm. The fluorescent spots in the chromatography obtained with the test solution correspond in position and colour to the spots in the chromatography obtained with the reference drug solution.

(2) To 2 g of Flos Lonicerae Japonicae reference drug, carry out the preparation of Radix et Rhizoma Glycyrrhizae reference drug solution as described under Identification (1) to prepare a solution as the reference drug solution. Carry out the method for thin layer chromatography (Appendix Ⅵ B), using silica gel G mixed with sodium carboxymethylcellulose as the coating substance and a mixture of butyl acetate, formic acid and water (7 : 2.5 : 2.5) as the mobile phase. Apply separately 2 μl of each of the test solution and the reference drug solution to the plate. After developing and removal of the plate, dry in air. Examine under the ultraviolet light at 365 nm. The fluorescent spots in the chromatography obtained with the test solution correspond in position and colour to the spots in the chromatography obtained with the reference drug solution.

Other requirements Comply to the general requirements for granules (Appendix Ⅰ C).

Assay Carry out the method for high performance liquid chromatography (Appendix Ⅵ D).

Chromatographic system and system suitability Use octadecylsilane bonded silica gel as the stationary phase and a mixture of acetonitrile and 0.4% solution of phosphoric acid (13 : 87) as the mobile phase. As detector a spectrophotometer set at 327 nm. The number of theoretical plates of the column is not less than 1000, calculated with the reference to the peak of chlorogenic acid.

Reference solution Weigh accurately a quantity of chlorogenic acid CRS in an amber volumetric flask, dissolve in 50% methanol to produce a solution containing 25 μg per ml as the reference solution.

Test solution Pulverize the granules, obtained under the test of weight variation, to fine powder, weigh accurately 1.5 g or 0.5 g (granules without sucrose) to a stopper conical flask, add accurately 50 ml of 50% methanol. Stopper tightly, allow to stand for 15 minutes, mix well, filter, and use the successive filtrate as the test solution.

Procedure Inject accurately 10 μl of each of the reference solution and the test solution into the column, and calculate the content.

It contains not less than 4.0 mg of chlorogenic acid ($C_{16}H_{18}O_9$) per pack, referred to Flos Lonicerae Japonicae.

Action To nourish *yin* to clear *heat*, and relieve *toxicity* and reduce swelling.

Indications Inflammation of the mouth due to flaming of *fire* from *yin* deficiency.

Usage and dosage 2 pack, 1-2 times a day.

Strength (1) 10 g per pack
(2) 3 g per pack (granules without sucrose)

Storage Preserve in tightly closed containers.

Langchuang Wan
(狼疮丸)

Langchuang Pills

Ingredients Flos Lonicerae Japonicae 53.6 g; Fructus Forsythiae 53.6 g; Herba Taraxaci 53.6 g; Rhizoma Coptidis 13.4 g; Radix Rehmanniae 53.6 g; Radix Et Rhizoma Rhei (stir-baked with wine) 20.1g; Radix Et Rhizoma Glycyrrhizae 13.4 g; Scolopendra (discarded head, tail and feet) 2.42 g; Radix Paeoniae Rubra 26.8 g; Radix Angelicae Sinensis 13.4 g; Radix et Rhizoma Salviae Miltiorrhizae 13.4 g; Radix Scrophulariae 53.6g; Semen Persicae (stir-baked) 26.8 g; Flos Carthami 20.1 g; Periostracum Cicadae 53.6 g; Bulbus Fritillariae Thunbergii 26.8 g.

Procedure Pulverize the above sixteen ingredients to fine power, sift and mix well. To each 100 g of power add 10-30 g of refined honey and a quantity of water to make water-honeyed pills and dry, coat with Radix Sanguisorbae (carbonized). Or add 90-110 g of refined honey to make small honeyed pills or big honeyed pills.

Description Black coated water-honeyed pills, with dark brown to blackish-brown core, or blackish-brown small honeyed pills or big honeyed pills; odour, slight; taste, pungent, astringent and slightly bitter.

Identification (1) Pulverize 5 g of water-honeyed pills; or triturate well 5 g of small honeyed pills or big honeyed pills with 4 g of kieselguhr. Ultrasonicate with 20 ml of ether for 5 minutes, allow to cool and filter. Evaporate the filtrate to dryness, and dissolve the residue in 1 ml of methanol as the test solution. Prepare a solution of 1 g of Radix Angelicae Sinensis reference drug and 20 ml of ether in the same manner as the reference drug solution. Carry out the method for thin layer chromatography (Appendix Ⅵ B), using silica gel G as the coating substance and a mixture of *n*-hexane and ethyl acetate (9 : 1) as the mobile phase. Apply separately 5 μl of the test solution and 2 μl of the reference drug solution to the plate. After developing and removal of the plate, dry in air. Examine under ultraviolet light at 365 nm, the fluorescent spots in the chromatogram obtained with the test solution correspond in position and colour to the spots in chromatogram obtained with the reference drug solution.

(2) Pulverize 5 g of water honeyed pills; or triturate well 5 g of small honeyed pills or big honeyed pills with 4 g of kieselguhr. Ultrasonicate with 30 ml of methanol for 20 minutes and filter. Evaporate the filtrate to dryness, and dissolve the residue in 2 ml of methanol as the test solution. Prepare a solution of 1 g of Fructus Forsythiae reference drug in the same manner as the reference drug solution. Carry out the method for thin layer chromatography (Appendix Ⅵ B), using silica gel G mixed with 0.1% solution of sodium hydroxide as the coating substance and a mixture of chloroform, ethyl acetate, methanol and formic acid (40 : 5 : 10 : 0.2) as the mobile phase. Apply separately 2 μl of each of the above solutions to the plate. After developing and removal of the plate, dry in air. Spray with 10% sulfuric acid in ethanol, and heat at 105℃ to the spots clear. The spots in the chromatogram obtained with the test solution correspond in position and colour to the spots in the chromatogram obtained with the reference drug solution.

(3) Evaporate the test solution obtained under Identification (2) to dryness, dissolve the residue in 20 ml of water, add 2 ml of hydrochloric acid and heat under reflux for 30 minutes. Cool, and extract with two 20-ml quantities of ether, combine the ether extracts, evaporate to dryness, and dissolve the residue in 1 ml of chloroform as the test solution. Ultrasonicate 0.1 g of the Radix et Rhizoma Rhei reference drug with 20 ml of methanol for 20 minutes and filter. Evaporate the filtrate to dryness, and dissolve the residue in 10 ml of water, add 2 ml of hydrochloric acid to prepare a solution in the same manner as the reference drug solution. Dissolve a quantity of emodin CRS and chrysophanol CRS in ethanol to prepare a mixture containing 1 mg of each per ml as the reference solution. Carry out the method for thin layer chromatography (Appendix Ⅵ B), using silica gel G as the coating substance and the upper layer of a mixture of petroleum ether (30-60℃), ethyl acetate and formic acid (15 : 5 : 1) as the mobile phase. Apply separately 4 μl of each of the above three solutions to the plate. After developing and removal of the plate, dry in air. Examine under ultraviolet light at 365 nm, the fluorescent spots in the chromatogram obtained with the test solution correspond in position and colour to the spots in chromatogram obtained with the reference drug solution and the reference solution.

Other requirements Comply with the general requirements for pills (Appendix Ⅰ A).

Assay Carry out the method for high performance liquid chromatography (Appendix Ⅵ D).

Chromatographic system and system suitability Use octadecylsilane bonded silica gel as the stationary phase and a mixture of acetonitrile, 0.05 mol/L solution of potassium dihydrogen phosphate (28 : 72) as the mobile phase. As detector a spectrophotometer set at 265 nm, maintain the column temperature at 35℃. The number of the theoretical plates of the column is not less than 3000, calculated with the reference to the peak of berberine hydrochloride.

Reference solution Dissolve a quantity of berberine hydrochloride CRS, accurately weighed, in methanol to prepare a solution containing 20 μg per ml.

Test solution Pulverize 0.5 g of water-honeyed pills; or triturate 5 g of small honeyed pills or big honeyed pills, obtained under the test of weight variation, and mix well. Weigh accurately, place to a stopper conical flask, add exactly 50 ml of mixture of hydrochloric acid and methanol (1 : 100), and weigh. Heat under reflux for 1 hour and allow to cool. Weigh again and replenish the lost weight with the above mixture, mix well and filter. Use the successive filtrate as the test solution.

Procedure Inject accurately 5 μl of the reference solution and 10 μl of the test solution into the column, and calculate the content.

It contains not less than 0.80 mg per gram of water-honeyed pills, 0.40 mg per gram of small honeyed pill, or 2.0 mg per big honeyed pill, of berberine hydrochioride ($C_{20}H_{18}ClNO_4$) referred to Rhizoma Coptidis.

Action To clear *heat* and *toxicity*, and cool blood and promote blood circulation.

Indications Systemic lupus erythematosus, or systemic sclerosis, or dermatomyositis, or panniculitis, or Behcet disease or connective tissue disease due to accumulated toxic-heat and stagnation of blood and *qi*.

Usage and dosage Water honey pill, 5.4 g each time, honey pill, 10 g each time, honey bolus, 2 big honeyed pills each time; During acute stage of systemic dermatitis glandularis erythematosa: double the dosage and 3 times a day.

Precaution Contraindicated for pregnant women.

Strength (1) 30 g per 100 water-honeyed pills
(2) 5 g per big honeyed pills

Storage Preserve in tightly closed containers.

Lemai Keli
(乐脉颗粒)

Lemai Granules

Ingredients Radix et Rhizoma Salviae Miltiorrhizae 499 g; Rhizoma Chuanxiong 249.5 g; Radix Paeoniae Rubra 249.5 g; Flos Carthami 249.5 g; Rhizoma Cyperi 124.75 g; Radix Aucklandiae 124.75 g; Fructus Crataegi 62.4 g.

Procedure Decoct the above seven ingredients with water for 3 times, 1 hour for each time, filter, concentrate the filtrate in a membrane rotating evaporator at a lower temperature (45-50℃) to a thin extract with a relative density of 1.10-1.30; mix with lactose on a interval flowing bed, dry, and make to 1000 g of granules.

Description Yellowish-brown to brown granules; taste, slightly bitter.

Identification (1) Shake 5 g with 30 ml of water, add 40 ml of ether and shake for 3 minutes and centrifuge. Separate the ether extract, add 1 g of anhydrous sodium sulfate, shake, filter, wash the residue with 10 ml of ether in two portions, combine the filtrate with the washings, evaporate to dryness, dissolve the residue in 1 ml of ether as the test solution. Dissolve tanshinone ⅡA CRS in ether to prepare a solution containing 0.7 mg per ml as the reference solution. Carry out the method for thin layer chromatography (Appendix Ⅵ B), using silica gel G as the coating substance and chloroform as the mobile phase. Apply separately 10-15 μl of each of above two solutions to the plate. After developing and removal of the plate, dry in air. The red spot in the chromatogram obtained with the test solution corresponds in position and colour to the spot in the chromatogram obtained with the reference solution.

(2) To 1 g of Rhizoma Chuanxiong reference drug add 30 ml of water, shake, extract with 40 ml of ether and shake strongly for 3 minutes and centrifuge. Separate the ether extract, add 1 g of anhydrous sodium sulfate, shake, filter, wash the residue with 10 ml of ether in two portions, combine the filtrate and the washings, evaporate to dryness, dissolve the residue in 1 ml of ether as the reference drug solution. Carry out the method for thin layer chromatography (Appendix Ⅵ B), using silica gel G as the coating substance and a mixture of ether and *n*-hexane (2 : 1) as the mobile phase. Apply separately 5 μl of each of the test solution obtained under Identification (1) and the above reference drug solution to the plate. After developing and removal of the plate, dry in air and examine under ultraviolet light at 365 nm. The fluorescence spots in the chromatogram obtained with the test solution correspond in position and colour to the spots in the chromatogram obtained with the reference drug solution.

(3) To 5 g of the granules add 30 ml of water, shake, extract with 40 ml of ether and shake for 3 minutes and centrifuge. Separate the ether extract, transfer to a separator, wash with 15 ml of a 4% solution of sodium hydroxide, shake strongly, separate the ether extract, add 1 g of anhydrous sodium sulfate, shake and filter. Wash the residue with 10 ml of ether in two portions, combine the filtrate and the washings, evaporate to dryness and dissolve the residue in 1 ml of ether as the test solution. Prepare a solution with 0.5g of Radix Aucklandiae reference drug in the same manner as the reference drug solution. Carry out the method for thin layer chromatography (Appendix Ⅵ B), using silica gel G as the coating substance and a mixture of ether and *n*-hexane (2 : 1) as the mobile phase. Apply separately 10 μl of the test solution and 5 μl of the reference drug solution to the plate. After developing and removal of the plate, dry in air. Spray with anisaldehyde TS, heat at 105℃ for 5 minutes. The bluish-purple spots in the chromatogram obtained with the test solution correspond in position and colour to the spots in the chromatogram obtained with the reference drug solution.

Other requirements Comply with the general requirements for granules (Appendix Ⅰ C).

Assay Carry out the method for high performance liquid chromatography (Appendix Ⅵ D).

Chromatographic system and system suitability Use octadecylsilane bonded silica gel as the stationary phase and a mixture of methanol, isopropanol, acetic acid and water (25 : 2 : 2 : 71) as the mobile phase. As detector a spectrophotometer set at 230 nm. The number of theoretical plates of the column is not less than 1000, calculated with reference to the peak of paeoniflorin.

Reference solution Dissolve paeoniflorin CRS, dried at 80℃ for 1 hour and weighed accurately, in 50% methanol to prepare a solution containing 0.1 mg per ml as the reference solution.

Test solution Weigh accurately 0.5 g, obtained in the test of weight variation and triturated to fine powder, dissolve with a small quantity of dilute ethanol TS, transfer to a 50 ml volumetric flask, wash with a quantity of dilute ethanol TS, and transfer the washings to the same flask, dilute with dilute ethanol TS to volume, ultrasonicate for 1 hour at 25±2℃, allow to stand, filter, use the successive filtrate as the test solution.

Procedure Inject accurately 5 μl of each of the reference solution and the test solution into the column and calculate the content.

It contains not less than 15 mg of paeoniflorin ($C_{23}H_{28}O_{11}$) per pack, referred to Radix Paeoniae Rubra.

Action To promote *qi* flow and promote blood circulation, and resolve stagnant blood to dredge meridians.

Indications Headache, dizziness, chest pain, palpitation due to stagnation of *qi* and blood; angina pectoris in coronary heart disease and multiple cerebral infarction with above symptoms.

Usage and dosage Taken after dissolved in boiled water. 1-2 packs, 3 times a day.

Strength 3 g per pack

Storage Preserve in tightly closed containers.

Liangfu Wan
(良附丸)

Liangfu Pills

Ingredients Rhizoma Alpiniae Officinarum 500 g; Rhizoma Cyperi (processed with vinegar) 500 g.

Procedure Pulverize the two ingredients to fine powder, sift and mix well, make pills with water and dry.

Description Brownish-yellow to yellowish-brown watered pills; odour, slightly aromatic; taste, pungent.

Identification (1) Microscopical: Starch granules clavet, 24-44 μm in length or longer; hilum pointed, short cleft or trichotomous. Secretory cells subrounded, containing pale yellowish-brown to reddish-brown masses, surrounded by

radially arranged cells; fibre bundles reddish-brown or yellowish-brown, slender, walls thickened.
(2) Pulverize 1 g of pills, add 10 ml of methanol, ultrasonicate for 10 minutes, allow to cool, and filter, use the filtrate as the test solution. Prepare a solution of 0.25 g of Rhizoma Alpiniae Officinarum reference drug in the same manner as the reference drug solution. Carry out the method for thin layer chromatography (Appendix VI B), using silica gel GF_{254} as the coating substance and a mixture of toluene, acetone and formic acid (5 : 1 : 0.1) as the mobile phase. Apply separately 5 μl of each of the above two solutions to the plate. After developing and removal of the plate, dry in air. Examine separately in daylight and under ultraviolet light at 254 nm. The spots in the chromatogram obtained with the test solution correspond in position and colour to the spots in the chromatogram obtained with the reference drug solution.

Other requirements Comply with the general requirements for pills (Appendix I A).

Action To warm the stomach and regulate *qi*.

Indications Epigastric pain and casting up of gastric acid, chest and abdominal fullness due to accumulation of *cold* and *qi* stagnation.

Usage and dosage 3-6 g, twice a day.

Storage Preserve in well closed containers, protected from moisture.

Lidan Paishi Pian
(利胆排石片)

Lidan Paishi Tablets

Ingredients Herba Lysimachiae 250 g; Herba Artemisiae Scopariae 250 g; Radix Scutellariae 75 g; Radix Aucklandiae 75 g; Radix Curcumae 75 g; Radix et Rhizoma Rhei 125 g; Semen Arecae 125 g; Fructus Aurantii Immaturus (stir-baked with bran) 50 g; Natrii Sulfas 25 g; Cortex Magnoliae Officinalis (processed with ginger) 50 g.

Procedure Pulverize Radix Aucklandiae, Radix et Rhizoma Rhei and Natrii Sulfas to fine powder. Decoct the other ingredients, filter, concentrate the filtrate to an appropriate amount, add the above powder and a quantity of excipients, mix well, make granules, make to 1000 tablets and coat with sugar or film.

Description Sugar-coated tablets or film-coated tablets with brown core; taste, bitter and salty.

Identification (1) Microscopical: Clusters of calcium oxalate 60-140 μm in diameter. Wood fibres long fusiform, 16-24 μm in diameter, with slightly thickened walls, showing transverse slit-shaped, crossed, V-shaped pit apertures. When observed on mounting in ethanol, irregular crystals almost colourless, with uneven edge, showing slender fissures and granules on the surface.
(2) Grind 5 tablets, removed the coats, add 20 ml of methanol, ultrasonicate for 15 minutes, and filter. Evaporate the filtrate to about 2 ml as the test solution. Prepare a solution of 0.5 g of Radix et Rhizoma Rhei reference drug and 20 ml of methanol in the same manner as the reference drug solution. Carry out the method for thin layer chromatography (Appendix VI B), using silica gel G as the coating substance and the upper layer of a mixture of petroleum ether (30-60℃), ethyl formate and formic acid (15 : 5 : 1) as the mobile phase. Apply separately 1 μl of each of the two solutions to the plate. After developing and removal of the plate, dry in air. Examine under ultraviolet light at 365 nm, the five orange-yellow fluorescent spots in the chromatogram obtained with the test solution correspond in position and colour to the spots in the chromatogram obtained with the reference drug solution. Expose to ammonia vapour and examine in sunlight, the colour of the spots turns to red.
(3) Grind 10 tablets, remove the coats, to fine powder, macerate with 20 ml of ether for 4 hours by constantly shaking, filter and expel ether. Dissolve the residue in 1 ml ethyl acetate as the test solution. Prepare a solution of 1 g of Radix Aucklandiae reference drug and 10 ml of ether in the same manner as the reference drug solution. Carry out the method for thin layer chromatography (Appendix VI B), using silica gel G as the coating substance, and a mixture of cyclohexane and acetone (10 : 3) as the mobile phase. Apply separately 5 μl of each of the two solutions to the plate. After developing and removal of the plate, dry in air. Spray with 5% vanillin in sulfuric acid and heat to the spots clear. The spots in the chromatogram obtained with the test solution correspond in position and colour to the spots in the chromatogram obtained with the reference drug solution.
(4) Grind 5 tables, remove the coats, to fine powder, add 20 ml of methanol, ultrasonicate for 20 minutes, and filter. Evaporate the filtrate to dryness, and dissolve the residue in 2 ml of methanol as the test solution. Dissolve a quantity of baicalin CRS in methanol to prepare a solution containing 1 mg per ml as the reference solution. Carry out the method for thin layer chromatography (Appendix VI B), using silica gel G mixed with sodium carboxymethylcellulose containing 4% solution of sodium acetate as the coating substance and a mixture of ethyl acetate, butanone, formic acid and water (5 : 3 : 1 : 1) as the mobile phase, pre-equilibrated the plate with the above mobile phase for 30 minutes. Apply separately 5 μl of each of the above two solutions to the plate. After developing and removal of the plate, dry in air. Spray with 5% ferric chloride in ethanol. The spot in the chromatogram obtained with the test solution corresponds in position and colour to the spot in the chromatogram obtained with the reference solution.
(5) Dissolve hesperidin CRS in methanol to prepare a saturated solution. Carry out the method for thin layer chromatography (Appendix VI B), using silica gel G containing 0.5% solution of sodium hydroxide as the coating substance and a mixture of ethyl acetate, methanol and water (100 : 17 : 13) as the mobile phase. Apply separately 5 μl of each of the reference solution and the test solution, obtained under Identification (4) to the plate. After developing about 8 cm and removal of the plate, dry in air, and then use the upper layer of a mixture of toluene, ethyl acetate, formic acid and water (20 : 10 : 1 : 1) as the mobile phase, after developing 8 cm and removal of the plate, dry in air. Spray with aluminum trichloride TS. Examine under ultraviolet light at 365 nm. The fluorescent spot in the chromatogram obtained with the test solution corresponds in position and colour to the spot in the chromatogram obtained with the reference solution.

Other requirements Comply with the general requirements for tablets (Appendix I D).

Assay Carry out the method for high performance liquid chromatography (Appendix VI D).

Chromatographic system and system suitability Use octadecylsilane bonded silica gel as the stationary phase and a mixture of methanol, water and phosphoric acid (47 : 53 : 0.2) as the mobile phase. As detector a spectrophotometer set at 280 nm. The number of the theoretical plates of the column is not less than 2000, calculated with the reference to the peak of baicalin.

Reference solution Weigh accurately a quantity of baicalin

CRS, dissolve in 70% ethanol to prepare a solution containing 20 μg per ml as the reference solution.

Test solution Weigh accurately 20 tablets, remove the coats, and triturate to fine powder. Weigh accurately 0.5 g in a stopper conical flask, add accurately 50 ml of 70% ethanol and weigh. Ultrasonicate (power 300 W, frequency 50 kHz) for 30 minutes, allow to cool, weigh again and replenish the lost weight with ethanol, mix well and filter. Measure accurately 5 ml of the successive filtrate in a 10 ml volumetric flask, dilute with 70% ethanol to volume, mix well and filter, use the successive filtrate as the test solution.

Procedure Inject accurately 10 μl of each of the reference solution and the test solution into the column, and calculate the content.

It contains not less than 2.0 mg of baicalin ($C_{21}H_{18}O_{11}$) per tablet, referred to Radix Scutellariae.

Action To clear *heat* and drain *dampness*, and promote bile flow and remove calculi.

Indications Hypochondriac pain and distention of the gallbladder due to retention of *damp-heat* and obstruction of *qi* of the *fu-organs*, with manifestations of distending pain in the hypochondriac region, fever, yellow urine and constipation; cholecystitis and cholelithiasis with above symptoms.

Usage and dosage 6-10 tablets for expelling calculi, 4-6 tablets for treating inflammation, twice a day.

Precaution Be cautious about debilitated patients and those with impaired liver function; it is forbidden to prescribe to pregnant women.

Storage Preserve in tightly closed containers.

Lingbao Huxin Dan
(灵宝护心丹)

Lingbao Huxin Pills

Ingredients Moschus; Venenum Bufonis; Calculus Bovis; Borneolum Syntheticum; Radix et Rhizoma Ginseng Rubra; Radix et Rhizoma Notoginseng; Succinum; Radix et Rhizoma Salviae Miltiorrhizae; Styrax.

Procedure Heat Radix et Rhizoma Salviae Miltiorrhizae under reflux with ethanol three times, 2 hours each, filter. Combine the filtrates, recover ethanol and concentrate to a quantity. Pulverize Radix et Rhizoma Ginseng Rubra, Radix et Rhizoma Notoginseng and Succinum to fine powder, mix with the extract of Radix et Rhizoma Salviae Miltiorrhizae and Venenum Bufonis, dry and pulverize to fine powder. Triturate Calculus Bovis, Moschus and Borneolum Syntheticum with the above fine powder, sift and mix well. Take the above fine powder and Styrax to make pills with water, dry and polish.

Description Reddish-brown concentrated watered pills. Odour, aromatic; taste, bitter, pungent and slightly numb.

Identification (1) Microscopical: Clusters of calcium oxalate 20-68 μm in diameter, with acute angles.

(2) Pulverize 25 pills to fine powder, add 3 ml of dehydrated ethanol, and continue to grind well and filter. To 1 ml of the filtrate, add about 0.3 g of antimony trichloride and 1 ml of chloroform, heat, a red colour is produced. Continue to heat, the solution turns rose-red or purple.

(3) Pulverize 0.5 g of the pills to fine powder, add 10 ml of water, extract with successive quantities of 20, 10 and 10 ml of ether. Combine the ether extracts, evaporate to dryness. Dissolve the residue in 2 ml of ethyl acetate as the test solution. Dissolve a quantity of a mixture of (±)-borneol and (±) isoborneol CRS in ethyl acetate to prepare a solution containing 3 mg per ml as the reference solution. Carry out the method for thin layer chromatography (Appendix Ⅵ B), using silica gel G mixed with sodium carboxymethylcellulose as the coating substance and a mixture of petroleum ether (60-90℃) and ethyl acetate (19 : 2) as the mobile phase. Apply separately 2-5 μl of each of the two solutions to the plate. After developing and removal of the plate, dry in air. Spray with 5% vanillin in sulfuric acid and heat at 105℃ to the spots clear. The spots in the chromatogram obtained with the test solution correspond in position and colour to the spots in the chromatogram obtained with the reference solution.

Other requirements Comply with the general requirements for pills (Appendix Ⅰ A).

Assay Triturate a quantity of pills to fine power. Weigh accurately 0.5 g, place to a stopper conical flask, and macerate with 4 ml of petroleum ether (60-90℃) for 1 hour. Filter, expel petroleum ether from the residue and the filter paper, transfer them into the same conical flask, add accurately 15 ml of the solution of glacial acetate acid and dehydrated ethanol (1 → 10), stopper tightly, weigh, macerate for 12 hours. Weigh again and replenish the lost weight with the above mixture, mix well and filter. Use the successive filtrate as the test solution. Dissolve a quantity of cholic acid CRS, accurately weighed, in the above mixture to prepare a solution containing 1 mg per ml as the reference solution. Carry out the method for thin layer chromatography (Appendix Ⅵ B), using silica gel G as the coating substance and a mixture of *n*-hexene, ethyl acetate, acetic acid and formic acid (6 : 32 : 1 : 1) as the mobile phase. Apply accurately 10 μl of the test solution, 2 μl and 4 μl of the reference solution alternatively, to the plate. After developing and removal of the plate, dry in air. Spray with 10% phosphomolybdic acid in dehydrated ethanol, and heat at 105℃ to the spots clear. Allow to cool, cover the plate with a piece of glass of the same size and fix up with tape. Carry out the method for thin layer chromatography (Appendix Ⅵ B, thin layer chromatographic scanning method), scan at the wavelength of λs=620 nm. Measure the integration values of the absorbance from the test solution and the reference solution, respectively, and calculate the content.

It contents not less than 2.5 mg of cholic acid ($C_{24}H_{40}O_5$) per gram, referred to Calculus Bovis.

Action To strengthen the heart and replenish *qi*, unblock *yang* to restore normal pulse-beat, induce resuscitation with aromatics, and promote blood circulation to kill pain.

Indications Chest impediment due to *qi* deficiency and blood stagnation, with manifestations of constriction in the chest, shortness of breath, precordial pain, knotted and intermittent pulse; bradycardiac sick sinus syndrome, angina pectoris and arrhythmia from coronary heart disease with above symptoms.

Usage and dosage 3-4 pills, 3-4 times a day. Taken after meals or follow doctor's advice.

Precaution It is forbidden to prescribe to pregnant women. Mild abdominal bloating and thirsty are seen in a few patients sometimes at the initial stage of peros, for which it is unnecessary to cease medication. Spontaneous remission of the symptoms will be found after continuous taking of it.

Strength 0.08 g per 10 pills

Storage Preserve in well closed containers, protected from

moisture.

Lingyang Ganmao Pian
(羚羊感冒片)

Lingyang Ganmao tablets

Ingredients Cornu Saigae Tataricae 3.4 g; Fructus Arctii 109 g; Semen Sojae Praeparatum 68 g; Flos Lonicerae Arctii 164 g; Herba Schizonepetae 82 g; Fructus Forsythiae 164 g; Herba Lophatheri 82 g; Radix Platycodi 109 g; Oleum Menthae Dementholatum 0.68 ml; Radix et Rhizoma Glycyrrhizae 68 g.

Procedure Pulverize Cornu Saigae Tataricae to fine powder. Pulverize Radix Platycodi and 82 g of Flos Lonicerae Arctii to fine powder and sift respectively, and triturate well with powder of Cornu Saigae Tataricae. Distil volatile oil from Herba Schizonepetae and Fructus Forsythiae, collect the water solution after distilation in a seperate container. Decoct Herba Lophatheri; Fructus Arctii, Radix et Rhizoma Glycyrrhizae, Semen Sojae Praeparatum and the above residue with water twice, 2 hours for each time, combine the decoctions and filter. Combine the filtrate and the above water solution and evaporate appropriately. Macerate the rest of Flos Lonicerae Arctii in warm water twice, 2 hours for each time, combine the liquid and filter. Evaporate the filtrate appropriately, mix with the above evaporated solution, continue to concentrate to a thick extract, add the fine powder of Cornu Saigae Tataricae, Radix Platycodi and Flos Lonicerae and a quantity of excipients, mix well, make granules, dry. Or dry by spraying the mixture of evaporated solution to dry, add the fine powder of Cornu Saigae Tataricae, Radix Platycodi and Flos Lonicerae and a quantity of excipients, mix well, make granules. Add the Oleum Menthae Dementholatum and the above volatile oil by spraying, mix well, make to 1000 tablets, coat with sugar or film.

Description Sugar coated or film coated tablets with yellowish brown to dark brown core. Odour, aromatic; taste, sweat.

Identification (1) Triturate 7 tablets, remove the coats, to fine powder, heat under reflux with 50 ml of water for 30 minutes, cool and filter, adjust the pH value of the filtrate to 2 with a solution of hydrochloric acid (1→2), extract with two 30-ml quantities of ether, combine the ether extracts, and evaporate to dryness. Dissolve the residue in 2 ml of ethanol, filter, use the filtrate as the test solution. Prepare a solution of 1 g of Fructus Forsythiae reference drug in the same manner as the reference drug solution. Carry out the method for thin layer chromatography (Appendix Ⅵ B), using silica gel G as the coating substance and a mixture of toluene, ethyl acetate and acetic acid (20 : 10 : 0.5) as the mobile phase. Apply separately 5-7 μl of the above two solutions to the plate. After developing and removal of the plate, dry in air. Spray with 10% sulfuric acid in ethanol and heat at 105°C to the spots clear. The spots in the chromatogram obtained with test solution correspond in position and colour to the spots in the chromatogram obtained with the reference drug solution.

(2) Triturate 10 tablets, remove the coats, to powder, heat under reflux with 50 ml of the mixture of 7% solution of sulfuric acid in ethanol and water (1 : 1) for 3 hours, cool and extract with two 20-ml quantities of chloroform, combine the chloroform extracts, wash with 30 ml of water, discard the washings. Dehydrate the chloroform extracts with anhydrous sodium sulphate, filter, evaporate the filtrate to dryness. Dissolve the residue in 1 ml of methanol as the test solution. Prepare a solution of 1 g of Radix Platycodi reference drug in the same manner as the reference drug solution. Carry out the method for thin layer chromatography (Appendix Ⅵ B), using silica gel G as the coating substance and a mixture of chloroform and ether (1 : 1) as the mobile phase. Apply separately 5-7 μl of the above two solutions to the plate. After developing and removal of the plate, dry in air. Spray with 10% sulfuric acid in ethanol and heat at 105°C to the spots clear. The spots in the chromatogram obtained with the test solution correspond in position and colour to the spots in the chromatogram obtained with the reference drug solution.

(3) Triturate 10 tablets, remove the coats, to powder, add 20 ml of ethanol, ultrasonicate for 30 minutes, filter, evaporate the filtrate to dryness, dissolve the residue in 15 ml of water, extract with three 15-ml quantities of *n*-butanol saturated with water, combine the *n*-butanol extracts, wash with two 15-ml of water saturated with *n*-butanol, evaporate the *n*-butanol extracts to dryness. Dissolve the residue in 1 ml of methanol, apply to a small column (1.0 cm in diameter) packed with neutral aluminium oxide (60-100 mesh, 2 g). Elute with 50 ml of methanol, collect the eluates, evaporate to dryness. Dissolve the residue in 2 ml of methanol as the test solution. To 1 g of Radix et Rhizoma Glycyrrhizae reference drug, carry out the method described under the preparation of the test solution, ending at the words "evaporate the *n*-butanol extracts to dryness", dissolve the residue in 1 ml of methanol as the reference drug solution. Carry out the method for thin layer chromatography (Appendix Ⅵ B), using silica gel G as the coating substance and a mixture of toluene, ethyl acetate and methanol (7 : 3 : 1) as the mobile phase. Apply separately 3-5 μl of the above two solutions to the plate. After developing and removal of the plate, dry in air. Examine under ultraviolet light at 365 nm, the fluoresent spots in the chromatogram obtained with the test solution correspond in position and colour to the spots in the chromatogram obtained with the reference drug solution.

Other requirements Comply with the general requirements for tablets (Appendix Ⅰ D).

Assay Carry out the method for high performance liquid chromatography (Appendix Ⅵ D).

chromatographic system and system suitability Use octadecylsilane bonded silica gel as the stationary phase and a mixture of acetonitrile and water (25 : 75) as the mobile phase. As detector a spectrophotometer set at 280 nm. The number of theoretical plates of the colunm is not less than 4000, calculated with reference to the peak of arctiin.

Reference solution Dissolve a quantity of arctiin CRS, accurately weighed, in methanol to prepare a solution containing 0.1 mg per ml as the reference solution.

Test solution Pulverize 10 tablets, remove the coats, to fine powder. Weigh accurately a quantity of powder (equivalent to the weight of 1 tabet) in a stopper conical flask, add accurately 20 ml of 50% methanol, stopper tightly, and weigh. Ultrasonicate for 20 minutes (power 250 W, frequency 50 kHz), stand to cool, and weigh again. Replenish the loss of the weight with 50% methanol, mix well, filter, use the successive filtrate as the test solution.

Procedure Inject accurately 10 μl of each of the reference solution and the test solution into the column and calculate the content.

It contains not less than 1.52 mg of arctiin ($C_{27}H_{34}O_{11}$) per tablet, referred to Fructus Arctii.

Action To clear *heat* and release the exterior.

Indications Influenza with manifestations of fever, aversion

to wind, headache, dizziness, coughing, constriction in the chest and swollen painful throat.

Usage and dosage 4-6 tablets, twice a day.

Strength (1) 0.32 g per film coated tablet
(2) 0.36 g per film coated tablet

Storage preserved in tightly closed containers.

Lingyang Qingfei Wan
(羚羊清肺丸)

Lingyang Qingfei Pills

Ingredients Bulbus Fritillariae Thunbergii 40 g; Cortex Mori (stir-baked with honey) 25 g; Radix Peucedani 25 g; Radix Ophiopogonis 25 g; Radix Asparagi 25 g; Radix Trichosanthis 50 g; Radix Rehmanniae 50 g; Radix Scrophulariae 50 g; Herba Dendrobii 100 g; Radix Platycodonis 50 g; Folium Eriobotryae (stir-baked with honey) 50 g; Semen Armeniacae Amarum (stir-baked) 25 g; Radix Tinosporae 25 g; Flos Lonicerae Japonicae 50 g; Folium Isatidis 25 g; Fructus Gardeniae 50 g; Radix Scutellariae 25 g; Radix Isatidis 25 g; Cortex Moutan 25 g; Herba Menthae 25 g; Radix et Rhizoma Glycyrrhizae 15 g; Radix et Rhizoma Rhei (Prepared) 25 g; Pericarpium Citri Reticulatae 30 g; Pulvis Cornus Saigae Tataricae 6 g.

Procedure Pulverize the above twenty three ingredients, except Pulvis Cornus Saigae Tataricae, to fine powder, sift. Triturate Pulvis Cornus Saigae Tataricae with the above powder, sift and mix well. To each 100 g of the powder add 140-160 g of refined honey to make big honeyed pills.

Description Black big honeyed pills; taste, slightly bitter.

Identification (1) Microscopical: Clusters of calcium oxalate large, 60-140 μm in diameter. Pollen grains subrounded, up to about 76 μm in diameter, extine with spinous sculptures and 3 germinal apertures. Fibres pale yellow, fusiform, with thickened walls and fine pit-canals. Stone cells yellowish-brown or colourless, subrectangular, subrounded or irregular, up to 94 μm in diameter, lumina relatively large. Subrounded cells surrounding fibres containing small rounded silica bodies, arranged in rows. Stone cells of testa yellow or brownish yellow, mostly broken, the whole, ones elongated polygonal, rectangular or irregular, with thickened walls and large rounded pits, lumina brownish-red.
(2) Triturate well 20 g of the pills with 10 g of kieselguhr. Ultrasonicate with 60 ml of *n*-butanol saturated with water for 20 minutes and filter. Evaporate the filtrate to dryness, and dissolve the residue in 2 ml of ethanol, add a quantity of neutral aluminium oxide, stir well on a water bath, dry. Apply to a column (1.0-1.5 cm in internal diameter) packed with neutral aluminium oxide (100-200 mesh, 3 g). Elute with 50 ml of methanol, collect the methanol eluate. Evaporate to dryness and dissolve the residue in 1 ml of ethanol as the test solution. Dissolve a quantity of geniposide CRS in ethanol to prepare a solution containing 2 mg per ml as the reference solution. Carry out the method for thin layer chromatography (Appendix VI B), using silica gel G as the coating substance and a mixture of ethyl acetate, acetone, formic acid and water (5 : 5 : 1 : 1) as the mobile phase. Apply separately 15 μl of the test solution and 2 μl of the reference solution to the plate. After developing and removal of the plate, dry in air. Spray with 5% vanillin in ethanol, and heat to the spots clear. The spot in the chromatogram obtained with the test solution corresponds in position and colour to the spot in the chromatogram obtained with the reference solution.
(3) Triturate well 12 g of the pills with 6 g of kieselguhr. Ultrasonicate with 50 ml of methanol for 20 minutes and filter. Evaporate the filtrate to dryness, dissolve the residue with 20 ml of water, add 2 ml of hydrochloric acid and heat under reflux for 30 minutes. Cool, and extract with two 25-ml quantities of chloroform, combine the chloroform extracts and evaporate to dryness, and dissolve the residue in 1 ml of chloroform as the test solution. Prepare a solution of 0.1 g of the Radix et Rhizoma Rhei reference drug with 15 ml of methanol in the same manner as the reference drug solution. Dissolve a quantity of emodin CRS in ethanol to prepare a solution containing 1 mg per ml as the reference solution. Carry out the method for thin layer chromatography (Appendix VI B), using silica gel G as the coating substance and the upper layer of a mixture of petroleum ether (30-60℃), ethyl formate and formic acid (15 : 5 : 1) as the mobile phase. Apply separately 10 μl of the test solution and 4 μl of each of the reference solution and the reference drug solution to the plate. After developing and removal of the plate, dry in air, expose to ammonia vapour for 2 minutes. The spots in the chromatogram obtained with the test solution correspond in position and colour to the spots in chromatogram obtained with the reference drug solution and the reference solution.

Other requirements Comply with the general requirements for pills (Appendix I A).

Assay Carry out the method for high performance liquid chromatography (Appendix VI D).

Chromatographic system and system suitability Use octadecylsilane bonded silica gel as the stationary phase and a mixture of methanol, water and phosphoric acid (20 : 80 : 0.1) as the mobile phase. As detector a spectrophotometer set at 327 nm, maintain the column temperature at 40℃. The number of the theoretical plates of the column is not less than 2500, calculated with the reference to the peak of chlorogenic acid.

Reference solution Dissolve a quantity of chlorogenic acid CRS in an amber volumetric flask, accurately weighed, in methanol to prepare a solution containing 30 μg per ml.

Test solution Triturate the pills, obtained under the test of weight variation. Weigh accurately 1 g, place to a stopper conical flask, add accurately 25 ml of 70% methanol and weigh. Heat under reflux for 30 minutes, allow to cool, weigh again and replenish the lost weight with 70% methanol, mix well and filter, use the successive filtrate as the test solution.

Procedure Inject accurately 10 μl of each of the reference solution and the test solution into the column, and calculate the content.
It contains not less than 2.0 mg of chlorogenic acid ($C_{16}H_{18}O_9$) per pill, referred to Flos Lonicerae Japonicae.

Action To clear the lung and ease the throat, and threat epidemics and relieve cough.

Indications Fever, dizziness, weakness of limbs, cough with much expectoration, swollen painful throat, epistaxis, hemoptysis and dry mouth and tongue due to extremely abundant *heat* in the lung and stomach and affliction from seasonal pathogenic factors.

Usage and dosage 1 pill, 3 times a day.

Strength 6 g per pill

Storage Preserve in tightly closed containers.

Liquor Leonuri
(益母草口服液, Yimucao Koufuye)

Motherwort Herb Mixture

Motherwort herb mixture is prepared from Herba Leonuri.

Procedure Decoct 500 g of Herba Leonuri with water for 3 times, 2 hours, 1.5 hours and 1 hour respectively, filter, combine the filtrates, and concentrate to about 250 ml. Allow to cool, add the same volume of ethanol, stir well, stand for 24 hours. Filter, recover ethanol in vacuum and concentrate to a thick extract. Dilute with water to 500 ml, refrigerate for 24 hours, filter, add an appropriate quantity of flavoring agents to the filtrate, adjust the total volume to 1000 ml with water, stir well, filter, pack and sterilize.

Description A clear, brownish-red liquid; taste, sweet, slightly bitter.

Identification Measure 10 ml of the mixture, add 50 ml of ethanol, stir and filter. Concentrate the filtrate to 5 ml, add 45 ml of dehydrated ethanol, stir, filter, concentrate the filtrate to dryness, and dissolve the residue in 0.5 ml of dehydrated ethanol as the test solution. Dissolve stachydrine hydrochloride CRS in dehydrated ethanol to prepare a solution containing 5 mg per ml as the reference solution. Carry out the method for thin layer chromatography (Appendix Ⅵ B), using silica gel G containing sodium carboxymethylcellulose as the coating substances and a mixture of *n*-butanol, hydrochloric acid and water (8 : 2 : 1) as the mobile phase. Apply separately 10 μl of each of the test solution and the reference solution to the plate. After developing and removal of the plate, dry in air. Spray with dilute Potassium Heptaiodobismuthate TS. The spot in the chromatogram obtained with the test solution corresponds in position and colour to the spot in the chromatogram obtained with the reference solution.

Relative density 1.01-1.03 (Appendix Ⅶ A).

pH value 5.0-6.0 (Appendix Ⅶ G).

Other requirements Comply with the general requirements for mixtures (Appendix Ⅰ J).

Assay ***Reference solution*** Weigh accurately 25 mg of stachydrine hydrochloride CRS, previously dried to constant weight at 105 ℃, place in a 25 ml volumetric flask, dissolve in 0.1 mol/L solution of hydrochloric acid, dilute to volume and mix well (containing 1 mg of stachydrine hydrochloride per ml).

Standard curve Transfer accurately 2.0, 4.0, 6.0 ml, and 8.0 ml of the reference solution to 25 ml beakers respectively, adjust the volume to 10 ml with 0.1 mol/L solution of hydrochloric acid. Add 0.5 g of active charcoal (dried at 140 ℃ for 4-5 hours) separately, heat 0.5 minute on a boiling water bath, and stir constantly. Filter to 25 ml volumetric flasks respectively, wash the beakers and filter funnels with 10 ml of 0.1 mol/L solution of hydrochloric acid in portions, combine the washings to the same flask. Measure 20 ml of 0.1 mol/L solution of hydrochloric acid in a 25 ml volumetric flask, used as blank solution. Add accurately 3 ml of freshly prepared 2% solution of ammonium reineckate to each flask, mix well, dilute with 0.1 mol/L solution of hydrochloric acid to volume and mix well. Allow to stand on an ice-water bath for 1 hour, filter through dry filter paper and use the successive filtrate. Carry out the method for ultraviolet spectrophotometry and colourimetry (Appendix Ⅴ A), measure the absorbance of the successive filtrate at 520nm, perform 0.1 mol/L solution of hydrochloric acid as blank. Subtract the absorbance of the reference solution from the absorbance of blank solution, plot the standard calibration curve, using difference of absorbance as ordinate and concentrate as abscissa.

Procedure Transfer accurately 10ml of the mixture, obtained in the test of content variation, to a 25 ml volumetric flask, dilute with 0.1 mol/L solution of hydrochloric acid to volume and mix well. Filter with dry filter paper, measure accurately 10 ml of the successive filtrate in a 25 ml beaker, carry out the same method described under the preparation of standard curve, beginning at the word "add 0.5 g of active charcoal,...", measure the absorbance. Subtract the absorbance of test solution from the absorbance of blank solution. Calculate the content of stachydrine hydrochloride from the standard curve.

It contains not less than 1.0 mg of alkaloids per ml, calculated as stachydrine hydrochloride ($C_7H_{13}NO_2 \cdot HCl$).

Action To promote blood circulation to regulate menstruation.

Indications Menstrual disorders and lochiorrhea after childbirth due to stagnation of blood with manifestations of hypomenorrhea, continuous dripping of menstrual blood postpartum subinvolution of the uterus with above symptoms.

Usage and dosage 10-20 ml, 3 times a day, or follow doctor's advice.

Precaution Contraindicated for pregnant women.

Strength 10 ml per phial

Storage Perverse in well closed containers.

Liquor Sarcandrae
(血康口服液, Xuekang Koufuye)

Xuekang Mixture

Xuekang Mixture is prepared from the extract of Herba Sarcandrae.

Procedure Boil the extract powder of Herba Sarcandrae with water, to dissolve, concentrate and cool. Add ethanol to a content of 70% of ethanol and stand for 48 hours. Recover ethanol from the supernatant liquid, add a quantity of water and filter. Mix the filtrate with a quantity of simple syrup and sodium benzoate, add water to a regulated volume, stir well and pack.

Description A clear, reddish-brown liquid; taste, bitter, astrigent and slightly sweet.

Identification (1) Heat gently 0.5 ml to dryness in a test tube, add a small quantity of zinc powder and 1 drop of a 0.1% solution of ammonium chloride, heat on a gentle fire to dryness. Cover the test tube mouth with a filter paper, moistened with a mixture solution of 5% *p*-dimethylaminobenzaldehyde and 20% trichloroacetic acid in benzene, continue heating gently, the evaporating vapour turn the filter paper to pink or purple colour.

(2) Extract 20 ml with two 20-ml quantities of ethyl acetate and evaporate the combined extracts to dryness. Dissolve the residue in 1 ml of methanol to prepare a solution as the test solution. To 2 g of Herba Sarcandrae reference drug add 50 ml of water, ultrasonicate for 30 minutes and filter. Extract the filtrate with two 25-ml quantities of ethyl acetate and evaporate the combined extracts to dryness. Dissolve the

residue in 1 ml of methanol to prepare a solution as the reference drug solution. Dissolve isofraxidin CRS in methanol to prepare a solution containing 0.5 mg per ml as the reference solution. Carry out the method for thin layer chromatography (Appendix Ⅵ B), using silica gel G mixed with sodium carboxymethylcellulose as the coating substance and a mixture of toluene, ethyl acetate and formic acid (9 : 4 : 1) as the mobile phase. Apply separately 4 μl of each of the three solutions to the plate. After developing and removal of the plate, dry in air and examine under ultraviolet light at 365 nm. The fluorescent spots in the chromatogram obtained with the test solution correspond in position and colour to the spots in the chromatograms obtained with the reference drug solution and the reference solution. Expose the plate to ammonia vapour for 10 minutes. Examine in daylight, the spot due to isofraxidin turns to yellowish-green.

Relative density Not less than 1.04 (Appendix Ⅷ A).

pH value 4.0-6.0 (Appendix Ⅷ G).

Other requirements Comply with the general requirements for mixtures (Appendix Ⅰ J).

Assay Carry out the method for high performance liquid chromatography (Appendix Ⅵ D).

Chromatographic system and system suitability Use octadecylsilane bonded silica gel as the stationary phase and a mixture of acetonitrile and 0.1% solution of phosphoric acid (20 : 80) as the mobile phase. As detector a spectrophotometer set at 344 nm. The number of theoretical plates of the column is not less than 1200, calculated with reference to the peak of isofraxidin.

Reference solution Dissolve a quantity of isofraxidin CRS, weighed accurately, in methanol to prepare a solution containing 4 μg per ml.

Test solution Extract 10 ml, measured accurately, with successive quantities of 10,10,10,10 and 5 ml of ethyl acetate in a separator, combine the extracts, transfer to a 50 ml volumetric flask, add ethyl acetate to volume and mix well. Measured accurately 3 ml of the solution, evaporate to dryness, dissolve the residue in methanol then transfer to a 25 ml volumetric flask, dilute to volume with methanol and shake well.

Procedure Accurately inject 20 μl of each of the reference solution and the test solution into the column, and calculate the content.

It contains not less than 0.90 mg of isofraxidin ($C_{11}H_{10}O_5$) per phial, referred to Herba Sarcandrae.

Action To promote blood circulation to resolve stagnated blood, reduce swelling and dissipate nodulation, and cool blood to stop hemorrhage.

Indications Purpura due to *heat* in blood; primary and secondary thrombocytopenic purpura with above symptoms.

Usage and dosage 10-20 ml, 3-4 times a day; appropriate reduction of the dosage for children. One month continously taking is permitted.

Precaution Mild nausea and somnolence in some patients after taking it will be spontaneously remitted if it is continuously taken.

Strength 10 ml per phial

Storage Preserve in tightly closed containers, stored in a cool place.

Liuhe Dingzhong Wan
(六合定中丸)

Liuhe Dingzhong Pills

Ingredients Herba Pogostemonis 16 g; Folium Perillae 16 g; Herba Moslae 16 g; Radix Aucklandiae 36 g; Lignum Santali Album 36 g; Cortex Magnoliae Officinalis (processed with ginger) 48 g; Fructus Aurantii (stir-baked) 48 g; Pericarpium Citri Reticulatae 48 g; Radix Platycodi 48 g; Radix et Rhizoma Glycyrrhizae 48 g; Poria 48 g; Fructus Chaenomelis 48 g; Semen Lablab Album (stir-baked) 16 g; Fructus Crataegi (stir-baked) 48 g; Massa Medicata Fermentata (stir-baked) 192 g; Fructus Hordei Germinatus (stir-baked) 192 g; Fructus Oryzae Germinatus (stir-baked) 192 g.

Procedure Pulverize the above seventeen ingredients to fine powder, sift and mix well. Make pills with water and dry.

Description Yellowish-brown watered pills; odour, slightly aromatic; taste, slightly sour and bitter.

Identification (1) Microscopical; Compound starch granules ovoid or subrounded, consisting of numerous polygonal components. Irregular branched masses colourless, dissolved in chloral hydrate solution TS; hyphae colourless or pale brown, 4-6 μm in diameter. Needles of calcium oxalate fine, scattered in mesophyll. Mesophyll containing small clusters of calcium oxalate of 4-8 μm in diameter. Parenchymatous cells containing prisms of calcium oxalate, crystal cells square or rectangular, with lignified and thickened walls, showing distinct striations. Prisms of calcium oxalate abundant in parenchyma. Prisms of calcium oxalate scattered in the fragments of mesophyll. Fibre bundles surrounded by parenchymatous cells containing prisms of calcium oxalate, forming crystal fibre. Wood fibres long fusiform, 16-24 μm in diameter, with slightly thickened walls and transversal cleft, crossed or V-shaped pit apertures. Epidermal cells arranged longitudinally, often with one long cell connected to two short cells, walls of long cells thickened, sinuous and lignified. Stone cells of pericarp pale purplish-red, red or yellowish-brown, subrounded or polygonal, up to 125 μm in diameter. Stone cells branched, with thickened and distinctly striated walls. Palisade cells of testa abundant, colourless, 26-213 μm long, 5-26 μm wide.

(2) Grind 15 g to fine powder, macerate in 40 ml of ether for 4 hours with frequently shaking, filter and evaporate the filtrate to dryness. Dissolve the residue in 1 ml of ethanol and use the supernatant as the test solution. Prepare a solution with 0.5 g of Radix Aucklandiae reference drug and 10 ml of ether in the same manner as the reference drug solution. Carry out the method for thin layer chromatography (Appendix Ⅵ B), using silica gel G as the coating substance, and a mixture of petroleum ether (60-90℃) and ethyl acetate (9 : 1) as the mobile phase. Apply separately 2-4 μl of the test solution and 2 μl of the reference drug solution to the plate. After developing and removal of the plate, dry in air. Spray with 1% vanillin in sulfuric acid and visualize under a current of hot air. A blue spot in the chromatogram obtained with test solution corresponds in position and colour to the spot in the chromatogram obtained with the reference drug solution.

(3) Grind 12 g to fine powder, ultrasonicate with 30 ml of methanol for 15 minutes, filter and evaporate the filtrate to dryness. Dissolve the residue in 5 ml of methanol, filter and use the filtrate as the test solution. Ultrasonicate 0.5 g of Pericarpium Citri Reticulatae reference drug with 5 ml of methanol for 15 minutes, filter and use the filtrate as the

reference drug solution. Carry out the method for thin layer chromatography (Appendix Ⅵ B), using silica gel G as the coating substance, and a mixture of *n*-hexane and ethyl acetate (2 : 3) as the mobile phase. Apply separately 2-5 μl of each of the two solutions to the plate. After developing and removal of the plate, dry in air and examine under ultraviolet light at 365 nm. The main fluorescent spots in the chromatogram obtained with the test solution correspond in position and colour to the main fluorescent spots in the chromatogram obtained with the reference drug solution.

(4) Grind 12 g to fine powder, heat under reflux with 30 ml of ethyl acetate for 30 minutes, cool and filter. Extract the filtrate with three 20-ml quantities of 2% solution of sodium hydroxide. Combine the alkaline solutions, adjust pH to 1-2 with hydrochloric acid, extract with three 20-ml quantities of chloroform. Combine the chloroform extracts, wash with water, dehydrate with anhydrous sodium sulfate and evaporate to dryness on a water bath at 80℃. Dissolve the residue in 1 ml of methanol and use the supernatant as the test solution. Dissolve magnolol CRS and honokiol CRS in methanol to produce a mixture containing 1 mg of each per ml as reference solution. Carry out the method for thin layer chromatography (Appendix Ⅵ B), using silica gel GF_{254} mixed with 1% solution of sodium hydroxide as the coating substance, and a mixture of benzene and ethyl acetate (6 : 1) as the mobile phase. Apply separately, in strip, to the plate 20 μl of the test solution and 5 μl of the reference solution. After developing and removal of the plate, dry in air and examine under ultraviolet light at 254 nm. The strips in the chromatogram obtained with the test solution correspond in position and colour to the strips in the chromatogram obtained with the reference solution.

Other requirements Comply with the general requirements for pills (Appendix Ⅰ A).

Action To clear *summer-heat* and *dampness*, and regulate the *middle-energizer* to promote digestion.

Indications Chills and fever, headache, constriction in the chest, nausea, vomiting, diarrhea with abdominal pain due to affliction from *summer-heat* and *dampness* with retention of undigested food.

Usage and dosage 3-6 g, 2-3 times a day.

Storage Preserve in well closed containers, protected from moisture.

Liuwei Anxiao San
(六味安消散)

Liuwei Anxiao Powder

Liuwei Anxiao powder is a prescription used by Mongolian and Tibetan Nationalities.

Ingredients Radix Inulae 50 g; Radix et Rhizoma Rhei 200 g; Rhizoma Kaempferiae 100 g; Cypsum Rubrum (calcined) 250 g; Fructus Chebulae 150 g; Trona 300 g.

Procedure Pulverize the above six ingredients to fine powder, sift and mix well.

Description A greyish-yellow or yellowish-brown powder; odour, aromatic; taste, bitter, astringent and slightly salty.

Identification (1) Microscopical: Starch granules spheroid, ellipsoidal or subtriangular, 10-30 μm in diameter; hila and striations faint. Clusters of calcium oxalate large, 60-140 μm in diameter. Parenchymatous cells colourless, oblong or elongated polyangular, containing fan-shaped inulin masses.

(2) To 0.1 g add 5 ml of dilute sulfuric acid TS, effervescence is produced.

(3) Ultrasonicate 1.5 g of the powder with 25 ml of methanol for 10 minutes, and filter. Concentrate the filtrate to 2-5 ml as the test solution. Dissolve a quantity of ethyl-*p*-methoxycinnamate CRS in methanol to prepare a solution containing 5 mg per ml as the reference solution. Carry out the method for thin layer chromatography (Appendix Ⅵ B), using silica gel GF_{254} as the coating substance and a mixture of *n*-hexene and ethyl acetate (18 : 1) as the mobile phase. Apply separately 5 μl of each of the above two solutions to the plate. After developing and removal of the plate, dry in air. Examine under ultraviolet light at 254 nm. The spot in the chromatogram obtained with the test solution corresponds in position and colour to the spot in the chromatogram obtained with the reference solution.

(4) Macerate 2.5 g of the powder in 20 ml of methanol for 1 hour, and filter. Evaporate the filtrate to dryness, dissolve the residue in 10 ml of water, add 1 ml of hydrochloric acid, heat under reflux on a water bath for 30 minutes, and cool immediately. Extract with two 20-ml quantities of ether, combine the ether extracts, evaporate to dryness. Disslove the residue in 1 ml of chloroform as the test solution. Prepare a solution of 0.1 g of Radix et Rhizoma Rhei reference drug in the same manner as the reference drug solution. Dissolve respectively a quantity of emodin CRS and chrysophanol CRS in ethanol to prepare two kinds of reference solutions each containing 1 mg per ml. Carry out the method for thin layer chromatography (Appendix Ⅵ B), using silica gel G mixed with sodium carboxymethyl cellulose as the coating substance and the upper layer of a mixture of petroleum ether (30-60℃), ethyl formate and formic acid (15 : 5 : 1) as the mobile phase. Apply separately 8 μl of each of the above four solutions to the plate. After developing and removal of the plate, dry in air. Examine under ultraviolet light at 365 nm, the fluorescent spots in the chromatogram obtained with the test solution correspond in positions and colour to the spots in chromatogram obtained with the reference solutions; and five orange fluorescent spots in the chromatogram obtained with the test solution correspond in position and colour to the spots in chromatogram obtained with the reference drug solution. Expose to ammonia vapour, examine in daylight, the spots become red.

Other requirements Comply with the general requirements for powders (Appendix Ⅰ B).

Assay Carry out the method for high performance liquid chromatography (Appendix Ⅵ D).

Chromatographic system and system suitability Use octadecylsilane bonded silica gel as the stationary phase and a mixture of methanol and 1% solution of phosphoric acid (85 : 15) as the mobile phase. As detector a spectrophotometer set at 254 nm. The number of the theoretical plates of the column is not less than 5000, calculated with the reference to the peak of emodin.

Reference solution Dissolve separately a quantity of emodin CRS and chrysophanol CRS, weigh accurately, in methanol to prepare two kinds of reference solutions, containing 2.5 μg of emodin per ml and 8 μg of chrysophanol per ml.

Test solution Weigh accurately 0.5 g of the powder, place to a stopper conical flask, add exactly 25 ml of methanol and weigh. Heat under reflux on a water bath for 30 minutes, and allow standing to cool. Weigh again and replenish the lost weight with methanol, mix well and filter. Measure accurately 5 ml of the successive filtrate to a conical flask, epeal the methanol, add 10 ml of 2.5 mol/L solution of sulfuric acid, ultrasonicate for 5 minutes, add 10 ml of the chloroform. Heat under reflux for 1 hour, cool, transfer to

a separator, wash the container with a small quantity of chloroform and transfer to the same separator, extract by shaking. Separate the chloroform solution for later use, extract the water layer with two 8-ml quantities of chloroform. Combine the chloroform extracts, dehydrate with anhydrous sodium sulphate, recover the solvent to dryness. Add accurately 10 ml of methanol and weigh. Heat slightly on a water bath, weigh again, replenish the lost weight with methanol. Mix well and filter, use the successive filtrate as the test solution.

Procedure Inject accurately 10 μl of each of the reference solution and the test solution into the column, and calculate the content.

It contains not less than 0.70 mg of the total amount of emodin ($C_{15}H_{10}O_5$) and chrysophanol ($C_{15}H_{10}O_4$) per gram, referred to Radix et Rhizoma Rhei.

Action To harmonize the stomach and invigorate the spleen, promote digestion to remove stagnancy and obstruction, and promote blood circulation to kill pain.

Indications Gastric distending pain, indigestion, constipation or dysmenorrhea due to disharmony between the spleen and stomach, and retention of food in the stomach.

Usage and dosage 1.5-3 g, 2-3 times a day.

Precaution Contraindicated for pregnant women.

Strength 18 g per pack

Storage Preserve in well closed containers, protected from moisture.

Liuwei Dihuang Keli (六味地黄颗粒)

Liuwei Dihuang Granules

Ingredients Radix Rehmanniae Praeparata 320g; Fructus corni (processed) 160g; Cortex Moutan 120g; Rhizoma Dioscoreae 160g; Poria 120g; Rhizoma Alismatis 120g.

Procedure Decoct Radix Rehmanniae Praeparata, Poria and Rhizoma Alismatis with water for 2 times, filter and concentrate to a thick extract with a relative density of 1.32-1.35 (80℃). Pulverize Fructus Corni, Cortex Moutan and Rhizoma Dioscoreae to fine powder, combine with the extract. Add a quantity of dextrin, solution of stevioside and 75% ethanol, make to 1000 g of granules and dry.

Description Brown granules; taste, slightly sweet, sour and slightly bitter; odour, specifically aromatic.

Identification Pulverize 5 g of granules, heat under reflux with 40 ml of ether for 1 hour, filter, expel ether, and dissolve the residue in 1 ml of acetone as the test solution. Dissolve paeonol CRS in acetone to produce a solution containing 1 mg per ml as the reference solution. Carry out the method for thin layer chromatography (Appendix Ⅵ B), using silica gel G as the coating substance and a mixture of cyclohexane and ethyl acetate (3 : 1) as the mobile phase. Apply separately 10 μl of each of the above two solutions to the plate. After developing and removal of the plate, dry in air, spray with 5% ferric chloride in ethanol acidified with hydrochloric acid and heat to the spots clear. The purplish-brown spot in the chromatogram obtained with the test solution corresponds in position and colour to the spot in the chromatogram obtained with the reference solution.

Other requirements Comply with the general requirements for granules (Appendix Ⅰ C).

Assay ***Cortex Moutan*** Weigh accurately 2 g of the powdered granules, obtained under the test of weight variation, distil by water steam distillation, collect 450 ml of distillate in a 500 ml of volumetric flask, and dilute with water to volume. Carry out the method for ultraviolet spectrophotometry and colourimetry (Appendix Ⅴ A), measure the absorbance at 274 nm, taking 862 as the value of A (1%, 1cm) and calculate.

It contains not less than 6.0 mg of paeonol ($C_9H_{10}O_3$) per pack, referred to Cortex Moutan.

Fructus Corni Dissolve 5 g of the powdered granules, obtained under the test of weight variation and accurately weighed, in 30 ml of water, filter, wash the residue with 30ml of water, dry the drug residue at room temperature to a loose powder and heat to dryness at 100℃. Heat under reflux the residue together with the filter paper with a quantity of ether in a Soxhlet's extractor for 4 hours. Recover ether and macerate the residue with two 15-ml quantities of petroleum ether (30-60℃) for about 2 minutes each time. Decant out petroleum ether, dissolve the residue in a mixture of dehydrate ethanol and chloroform (3 : 2) with warming. Transfer the solution quantitatively to a 5 ml volumetric flask, dilute to volume, and mix well as the test solution. Dissolve ursolic acid CRS, weighed accurately, in dehydrated ethanol to produce a solution containing 0.5 mg per ml as the reference solution. Carry out the method for thin layer chromatography (Appendix Ⅵ B), using silica gel G as the coating substance and a mixture of cyclohexane, chloroform, ethyl acetate and formic acid (20 : 5 : 8 : 0.1) as the mobile phase. Apply accurately 5 μl and 10 μl of the test solution, 4 μl and 8 μl of the reference solution separately to the plate. After developing and removal of the plate, dry in air, spray with 10% sulfuric acid in ethanol, heat at 110℃ for 5-7 minutes until spots are observed. Cover the thin layer plate with a same size glass, fixed with adhesive plaster. Carry out the method for thin layer chromatography (Appendix Ⅵ B, thin layer chromatographic scanning method), scan at the wavelength: λ_S = 520nm, λ_R = 700 nm. Measure the integration values of absorbance of the test solution and the reference solution, and calculate.

It contains not less than 1.2 mg of ursolic acid ($C_{30}H_{48}O_3$) per pack, referred to Fructus Corni.

Action To nourish *yin* to reinforce the kidney.

Indications Dizziness, tinnitus, weakness and aching in the lower back and knees, steaming of bone with hectic fever, night sweat, seminal emission or diabetes due to a deficiency of *kidney-yin*.

Usage and dosage 5g, twice a day, taken after dissolved in boiled water.

Strength 5g per pack

Storage Preserve in well closed containers, and store in cool and dry place.

Liuwei Dihuang Wan (六味地黄丸)

Liuwei Dihuang Pills

Ingredients Radix Rehmanniae praeparata 160 g; Fructus Corni (processed) 80 g; Cortex Moutan 60 g; Rhizoma Dioscoreae 80 g; Poria 60 g; Rhizoma Alismatis 60 g.

Procedure Pulverize the above six ingredients to fine powder, sift and mix well. To each 100 g of the powder add 35-50 g of refined honey and a quantity of water to make pills and dry; or add 80-110 g of refined honey to make small

honeyed pills or big honeyed pills.

Description Brownish-black water-honeyed pills, blackish-brown small honeyed pills or big honeyed pills; taste, sweet and sour.

Identification (1) Microscopical: Starch granules triangular-ovoid or oblong, 24-40 μm in diameter, hila short cleft or V-shaped. Irregular branched masses colourless, dissolved in chloral hydrate TS; hyphae colourless, 4-6 μm in diameter. Parenchyma greyish-brown to blackish-brown, cells mostly shrunken, and each containing a brown nucleus-like mass. Clusters of calcium oxalate occurring in colourless parenchymatous cells, sometimes several clusters arranged in rows. Epidermal cells of pericarp orange-yellow, polygonal in surface view, with somewhat beaded anticlinal walls. Parenchymatous cells subrounded, with elliptical pits, gathered into pit groups, anticlinal walls of the endodermis cells sinuous, thickened, lignified, with slender pit-canals.

(2) Pulverize 6 g of the water-honeyed pills, or triturate 9 g of the small honeyed pills or big honeyed pills with 4 g of kieselguhr and triturate well. Heat under reflux with 40 ml of ether at a low temperature for 1 hour, filter and expel ether. Dissolve the residue in 1 ml of acetone as the test solution. Dissolve paeonol CRS in acetone to prepare a solution containing 1 mg per ml, as the reference solution. Carry out the method for thin layer chromatography (Appendix Ⅵ B), using silica gel G as the coating substance and cyclohexane and ethyl acetate (3 : 1) as the mobile phase. Apply separately 10 μl of each of the two solutions to the plate. After developing and removal of the plate, dry in air, spray with 5% ferric chloride in ethanol acidified with hydrochloric acid and heat to the spots clear. The bluish-brown spot in the chromatogram obtained with the test solution corresponds in position and colour to the spot in the chromatogram obtained with the reference solution.

Other requirements Comply with the general requirements for pills (Appendix Ⅰ A).

Assay ***Fructus Corni*** Carry out the method for high performance liquid chromatography (Appendix Ⅵ D).

Chromatographic system and system suitability Use octadecylsilane bonded silica gel as the stationary phase and a mixture of tetrahydrofuran, acetonitrile, methanol and 0.05% solution of phosphoric acid (1 : 8 : 4 : 87) as the mobile phase. As detector a spectrophotometer set at 236 nm, maintain the column temperature at 40℃. The number of the theoretical plates of the column is not less than 4000, calculated with the reference to the peak of loganin.

Reference solution Dissolve a quantity of loganin CRS, accurately weighed, in 50% methanol to prepare a solution containing 20 μg per ml.

Test solution Pulverize 0.7 g of water-honeyed pills or small honeyed pills; or triturate 1 g of big honeyed pills, obtained under the test of weight variation, and mix well, weigh accurately, place to a stopper conical flask, add exactly 25 ml of 50% methanol, and weigh. Ultrasonicate (power 250 W, frequency 33 kHz) for 15 minutes, heat under reflux for 1 hour and cool. Weigh again and replenish the lost weight with 50% methanol, mix well and filter. Measure accurately 10 ml of the successive filtrate, apply to a column (1 cm in internal diameter) packed with neutral aluminium oxide (100-200 mesh, 4 g). Elute with 50 ml of 40% methanol, collect the eluate. Evaporate to dryness and dissolve the residue in a quantity of 50% methanol, transfer to a 10 ml volumetric flask, dilute with 50% methanol to volume, and mix well.

procedure Inject accurately 10 μl of the reference solution and 10 μl of the test solutions into the column, and calculate the content.

It contains not less than 0.70 mg per gram of water-honeyed pills, 0.50 mg per gram of small honeyed pills, or 4.5 mg per big honeyed pill, of loganin ($C_{17}H_{26}O_{10}$), referred to Fructus Corni.

Cortex Moutan Carry out the method for high performance liquid chromatography (Appendix Ⅵ D).

Chromatographic system and system suitability Use octadecylsilane bonded silica gel as the stationary phase and a mixture of methanol and water (70 : 30) as the mobile phase. As detector a spectrophotometer set at 274 nm. The number of the theoretical plates of the column is not less than 3500, calculated with the reference to the peak of paeonol.

Reference solution Dissolve a quantity of paeonol CRS, accurately weighed, in 50% methanol to prepare a solution containing 20 μg per ml.

Test solution Pulverize 0.3 g of water-honeyed pills or small honeyed pills; or triturate 0.4 g of big honeyed pills, obtained under the test of weight variation, into pieces, mix well, weigh accurately, place to a stopper conical flask, add exactly 50 ml of 50% methanol, stopper tightly, and weigh. Ultrasonicate (power, 250 W; frequency, 33 kHz) for 45 minutes, allow to cool. Weigh again and replenish the lost weight with 50% methanol, mix well and filter. Use the successive filtrate as the test solution.

Procedure Inject accurately 10 μl of the reference solution and 20 μl of the test solution into the column, and calculate the content.

It contains not less than 0.90 mg per gram of water-honeyed pills, 0.70 mg per gram of small honeyed pills, or 6.3 mg per big honeyed pill, of paeonol ($C_9H_{10}O_3$), referred to Cortex Moutan.

Action To nourish *yin* to reinforce the kidney.

Indications Dizziness, tinnitus, weakness and aching in the lower back and knees, bone-steaming with tidal fever, night sweat, seminal emission or diabetes due to a deficiency of *kidney-yin*.

Usage and dosage 6 g of water-honeyed pills, 9 g of small honeyed pills or 1 big honeyed pill, twice a day.

Strength 9 g per big honeyed pill

Storage Preserve in tightly closed containers.

Liuwei Muxiang San
(六味木香散)

Liuwei Muxiang Powder

Liuwei Muxiang Powder is a prescription used by Mongolian Nationality.

Ingredients Radix Aucklandiae 200 g; Fructus Gardeniae 150 g; Fructus Granati 100 g; Flos Rhododendri 100 g; Fructus Amomi Rotundus 70 g; Fructus Piperis Longi 70 g.

Procedure Pulverize the above six ingredients to fine powder, sift and mix well.

Description A yellow powder; odour, aromatic; taste, pungent and bitter.

Identification (1) Microscopical: Stone cells of testa yellow or pale brown, mostly broken, the whole ones elongated polygonal, rectangular or irregular, with thickened walls and big rounded pits, lumina brownish-red. Stone cells

colourless, elliptical or subrounded, thick-walled, with fine and dense pit-canals. Stone cells of endotesta yellowish-brown or brownish-red, subpolygonal in surface view, thick-walled, lumina containing silica bodies. Cells of testa reddish-brown, elongated polygonal, with beaded walls. Reticulate vessels 32-90 μm in diameter. Pollen grains in tetragonal tetrad, with 3 germinal apertures.

(2) To 1 g add 15 ml of ether, shake for 10 minutes and discard the ether solution. To the residue, expel ether, add 15 ml of ethyl acetate, heat under reflux on a water bath for 1 hour, and filter. Evaporate the filtrate to dryness, and dissolve the residue in 2 ml of ethanol as the test solution. Dissolve geniposide CRS in ethanol to prepare a solution containing 4 mg per ml as the reference solution. Carry out the method for thin layer chromatography (Appendix Ⅵ B), using silica gel G as the coating substance and a mixture of ethyl acetate, acetone, formic acid and water (10 : 7 : 2 : 0.5) as the mobile phase. Apply separately 5 μl of each of the two solutions to the plate. After developing and removal of the plate, dry in air. Spray with a 10% sulfuric acid in ethanol, and heat to the spots clear. The spot in the chromatogram obtained with the test solution corresponds in position and colour to the spot in the chromatogram obtained with the reference solution.

(3) To 0.5 g of each of Radix Aucklandiae reference drug and Fructus Piperis Longi reference drug, add separately 10 ml of ether, shake for 10 minutes. Discard the ether solution and expel the remained ether. To the residues, add 10 ml of ethyl acetate for each, heat under reflux on a water bath for 1 hour, and filter. Evaporate the filtrates to dryness and dissolve the residues in 2 ml of ethanol as the reference drug solutions. Dissolve piperine CRS in ethanol to produce a solution containing 1 mg per ml as the reference solution. Carry out the method for thin layer chromatography (Appendix Ⅵ B), using silica gel G as the coating substance and cyclohexane and acetone (10 : 3) as the mobile phase. Apply separately 5 μl of each of the above three solutions and the test solution obtained under Identification (2) to the plate. After developing and removal of the plate, dry in air. Spray with 10% sulfuric acid in ethanol, allow to dry in air, examine under ultraviolet light at 365 nm. The fluorescent spots in the chromatogram obtained with the test solution correspond in position and colour to the spots in the chromatogram obtained with Fructus Piperis Longi reference drug solution and piperine reference solution. Heat to the spots distinct, examine in daylight. The spots in the chromatogram obtained with the test solution correspond in position and colour to the spots in the chromatogram obtained with Radix Aucklandiae reference drug solution.

Other requirements Comply with the general requirements for powders (Appendix Ⅰ B).

Assay Place 2.5 g of the powder, weighed accurately, in a brown stopper flask, exactly add 25 ml of chloroform and 1 ml of concentrated ammonia TS, shake well and weigh. Allow to stand overnight, protected from light, weigh again, replenish the lost weight with chloroform and filter. Exactly measure 5 ml of the successive filtrate, evaporate to dryness on water bath at 60℃, dissolve the residue in dehydrated ethanol, transfer it to a brown volumetric flask, dilute to volume and mix well, used as the test solution. Dissolve piperine CRS in dehydrated ethanol, in a brown volumetric flask to prepare a reference solution containing 0.5 mg per ml. Carry out the method for thin layer chromatography (Appendix Ⅵ B), using silica gel G as the coating substance and a mixture of benzene, ethyl acetate and dehydrated methanol (8 : 2 : 0.5) as the mobile phase. Apply accurately 6 μl of the test solution and 2 μl and 4 μl of the reference solution to the plate. After developing and removal of the plate, dry in air. Carry out the method for thin layer chromatography (Appendix Ⅵ B, thin layer chromatographic scanning method), scan at the wavelength of λ_S = 335 nm, λ_R = 215 nm. Measure the integrated absorbance values of the test solution and reference solution, and calculate the content.

It contains not less than 2.2 mg of piperine ($C_{17}H_{19}NO_3$) per gram, referred to Fructus Piperis Longi.

Action To promote *qi* flow and remove stagnation to kill pain.

Indications Fullness and pain in stomach, gastric discomfort with acid regurgitation, bleeding, abdominal bloating and incontinously bowels movement due to *cold-heat* in complexity and *qi* stagnated in the *middle-energizer*.

Usage and dosage 2-3 g, 1-2 times a day.

Strength 15 g per pack

Storage Preserve in well closed containers, protected from moisture.

Liuying Wan (六应丸)

Liuying Pills

Ingredients Flos Caryophylli; Venenum Bufonis; Realgar; Calculus Bovis; Margarita; Borneolum Syntheticum.

Procedure Levigate Realgar to fine powder, pulverize the other five ingredients to fine powder, respectively, add a quantity of starch, mix well, make pills, dry and coat with ferriferros oxide.

Description Black small pills, lustrous, fracture deep yellow; taste, bitter, pungent and numb.

Identification (1) Pulverize 30 pills, extract, with three 15-ml quantities of chloroform and filter. Concentrate the filtrate to dryness, dissolve the residue in 0.5 ml of chloroform as the test solution. Dissolve separately eugenol CRS, a mixture of (±)-borneol and (±) isoborneol CRS in chloroform to prepare two solutions containing 1 μl per ml and 1 mg per ml respectively as the reference solutions. Carry out the method for thin layer chromatography (Appendix Ⅵ B), using silica gel G as the coating substance and a mixture of benzene and acetone (9 : 1) as the mobile phase. Apply separately 4 μl of each of the three solutions to the plate. After developing and removal of the plate, dry in air. Spray with 5% vanillin in sulfuric acid and heat to the spots distinct. The brown spot due to eugenol in the chromatogram obtained with the test solution corresponds in position and colour to the spot in the chromatogram obtained with the reference solution of eugenol; and the another spots due to (±)-borneol and (±)-isoborneol correspond in position and colour to the spots in the chromatogram obtained with the reference solution of (±)-borneol and (±)-isoborneol.

(2) Pulverize 30 pills, add 1 ml of chloroform, shake and stand for 1 hour. Use the supernatant as the test solution. Dissolve bufogenin CRS in chloroform to produce a solution containing 1 mg per ml as the reference solution. Carry out the method for thin layer chromatography (Appendix Ⅵ B), using silica gel G as the coating substance and a mixture of cyclohexane, chloroform and acetone (4 : 3 : 3) as the mobile phase. Apply separately 4 μl of each of the test solution and the reference solution to the plate. After developing in a chamber pre-equilibriated with mobile phase for 15 minutes and removal of the plate, dry in air. Spray

with 10% sulfuric acid in ethanol and heat to the spots clear. The bluish-green spot in the chromatogram obtained with the test solution corresponds in position and colour to the spot in the chromatogram obtained with the reference solution.

(3) Pulverize 40 pills, add 20 ml of chloroform, ultrasonicate for 30 minutes, and filter. Evaporate the filtrate to dryness, and dissolve the residue in 1 ml of ethanol as the test solution. Dissolve separately a quantity of cholic acid CRS and deoxycholic acid CRS in ethanol to prepare two solutions containing 2 mg per ml and 1 mg per ml respectively as the reference solutions. Carry out the method for thin layer chromatography (Appendix Ⅵ B), using silica gel G as the coating substance and a mixture of isooctane, ethyl acetate and glacial acetic acid (5 : 5 : 1) as the mobile phase. Apply separately 1 μl of each of the above three solutions to the plate. After developing and removal of the plate, dry in air. Spray with 10% sulfuric acid in ethanol, heat at 105℃ to spots clear. Examine in daylight, the spots in the chromatogram obtained with the test solutions correspond in position and colour to the spots in the chromatogram obtained with the reference solutions. Examine under ultraviolet light at 365 nm, the fluorescent spots with the test solution correspond in position and colour to the spots in the chromatogram obtained with the reference solutions.

Arsenic trioxide Pulverize a quantity of the pills, to 0.5 g, accurately weighed, add 25 ml of dilute hydrochloric acid TS, stir constantly for 30 minutes, filter, wash the residue with three 20-ml quantities of dilute hydrochloric acid TS by stirring for 10 minutes. Combine the filtrate and washings into a 100 ml volumetric flask, add dilute hydrochloric acid TS to volume, mix well. Measure accurately 10 ml into a 50 ml volumetric flask, dilute with water to volume and mix well. To 2 ml, accurately measured, add 5 ml of hydrochloric acid and 21 ml of water. Carry out the limit test for arsenic (Appendix Ⅸ F, method 1), any stain produced the test solution is not more intense than that produced by the standard arsenic solution.

Weight variation Weigh separately 10 portions, each of 5 pills and carry out the method for weight variations of pills (Appendix Ⅰ A, method 1). The result should comply with the requirements.

Other requirements Comply with the general requirements for pills (Appendix Ⅰ A).

Assay Carry out the method for high performance liquid chromatography (Appendix Ⅵ D).

Chromatographic system and system suitability Use octadecylsilane bonded silica gel as the stationary phase and a mixture of acetonitrile and 0.5% solution of potassium dihydrogen phosphate (50 : 50) (adjust pH value to 3.2 with phosphoric acid) as the mobile phase. As detector a spectrophotometer set at 296 nm. The number of the theoretical plates of the column is not less than 9000, calculated with the reference to the peak of cinobufagin.

Reference solution Dissolve separately a quantity of bufogenin CRS and cinobufagin CRS, weigh accurately, in methanol to prepare two kinds of reference solutions, containing 80 μg of bufogenin per ml and 50 μg of cinobufagin per ml.

Test solution Pulverize a quantity of the pills, to 0.3g, accurately weighed, add accurately 20 ml of methanol, heat under reflux for 1.5 hours, allow to cool. Weigh again and replenish the lost weight with the mobile phase, mix well and filter, use the successive filtrate as the test solution.

Procedure Inject accurately 10 μl of each of the reference solution and the test solutions into the column, and calculate the content.

It contains not less than 6.5 mg of the total amount of bufogenin ($C_{24}H_{32}O_4$) and cinobufagin ($C_{26}H_{34}O_6$) per gram referred to Venenum Bufonis.

Action To clear *heat* and *toxicity*, and reduce swelling and pain.

Indications Inflammation of the throat, tonsillitis due to abundant fire in the interior with manifestations of swollen painful throat, bitter taste in the mouth, dry throat, swollen reddened tonsil, or carbuncles and boils with swelling and hot pain, insect bites with swelling and pain; laryngopharyngitis and tonsillitis with above symptoms.

Usage and dosage 10 pills for adults, 5 pills for children, 2 pills for infants, 3 times a day, taken after meal; appropriate quantity mixed with cool boiled water or vinegar for topical application.

Strength 19 mg per 5 pills

Storage Preserve in tightly closed containers.

Liuyi San
(六一散)
Liuyi Powder

Ingredients Pulvis Talci 600 g; Radix et Rhizoma Glycyrrhizae 100 g.

Procedure Pulverize Radix et Rhizoma Glycyrrhizae to fine powder, mix well with Pulvis Talci and sift.

Description A pale yellowish-white powder; taste, characteristic sweet of Radix et Rhizoma Glycyrrhizae, unctuous to touch.

Identification (1) Microscopical: Irregular pieces colourless, with traces of exfoliation. Fibre bundles surrounded by parenchymatous cells containing prisms of calcium oxalate, forming crystal fibres.

(2) To 2 g of the powder add 1 ml of hydrochloric acid and 15 ml of chloroform, heat under reflux for 1 hour, allow to cool, and filter. Evaporate the filtrate to dryness, dissolve the residue in 1 ml of ethanol as the test solution. Dissolve glycyrrhetinic acid CRS in dehydrated ethanol to prepare a solution containing 1 mg per ml as the reference solution. Carry out the method for thin layer chromatography (Appendix Ⅵ B), using silica gel G as the coating substance and a mixture of petroleum ether (30-60℃), benzene, ethyl acetate and glacial acetic acid (10 : 20 : 7 : 0.5) as the mobile phase. Apply separately 5 μl of each of the two solutions to the plate. After developing and removal of the plate, dry in air, spray with 10% phosphomolybdic acid in ethanol, heat at 105 ℃ for about 5 minutes. The spot in the chromatogram obtained with the test solution corresponds in position and colour to the spot in the chromatogram obtained with the reference solution.

Other requirements Comply with the general requirements for powders (Appendix Ⅰ B).

Assay Carry out the method for high performance liquid chromatography (Appendix Ⅵ D).

Chromatographic system and system suitability Use octadecylsilane bonded silica gel as the stationary phase and a mixture of methanol and ammonia dihydrogen phosphate solution (Dissolve 1.725 g of ammonia dihydrogen phosphate in 300 ml of water, adjust pH value to 3.5 with phosphoric acid) (65 : 35) as the mobile phase. As detector

a spectrophotometer set at 250 nm. The number of the theoretical plates of the column is not less than 3000, calculated with the reference to the peak of glycyrrhizic acid.

Reference solution Weigh accurately 12 mg of ammonium glycyrrhizinate CRS, in a 50 ml of volumetric flask, dilute with the mobile phase to volume, and mix well (containing 0.24 mg per ml, 0.2351 mg calculated for glycyrrhizic acid).

Test solution Weigh accurately 1.5 g of the powder, add accurately 25 ml of the mobile phase, and weigh. Ultrasonicate (power, 250 W; frequency, 33 kHz) for 30 minutes, allow to cool. Weigh again and replenish the lost weight with the mobile phase, mix well and filter, use the successive filtrate as the test solution.

Procedure Inject accurately 20 μl of each of the reference solution and the test solution into the column, and calculate the content.

It contains not less than 2.8 mg of glycyrrhizic acid ($C_{42}H_{62}O_{16}$) per gram, referred to Radix et Rhizoma Glycyrrhizae.

Action To clear *summer-heat* and drain *dampness*.

Indications Fever, lassitude, thirst, diarrhea and oliguria with dark urine due to affliction from *summer-heat* and *dampness*; also used for prickly heat exteriorly.

Usage and dosage 6-9 g, 1-2 times a day, taken after mixing with liquid or making decoction with wrapping; appropriate quantity to be dabbed on the affected part externally.

Storage Preserve in well closed containers, protected from moisture.

Liyan Jiedu Keli
(利咽解毒颗粒)

Liyan Jiedu Granules

Ingredients Radix Isatidis; Flos Lonicerae Japonicae; Fructus Forsythiae; Herba Menthae; Fructus Arctii (stir-baked); Fructus Crataegi (charred); Radix Platycodonis; Folium Isatidis; Bombyx Batryticatus; Radix Scrophulariae; Radix Scutellariae; Radix Rehmanniae; Radix Trichosanthis; Radix et Rhizoma Rhei; Bulbus Fritillariae Thunbergii; Radix Ophiopogonis.

Procedure Distill volatile oil of Herba Menthae, the aqueous solution for further use. Decoct the drug residue and the other fifteen ingredients with water for 2 times, 1.5 hours for each. Combine the decoction and filter. Combine the filtrate and the above aqueous solution, concentrate to an appropriate amount. Add a quantity of sucrose and starch, make granules. Dry, add the volatile oil and mix thoroughly; or concentrate the combined solution to an appropriate amount, add a quantity of dextrin, make without sucrose granules, dry, spray the volatile oil and mix thoroughly.

Description Yellowish-brown to brown granules; taste, sweet and slightly bitter, or bitter (without sucrose).

Identification (1) To 5 g, or 3 g (without sucrose) of granules, add 20 ml of methanol, ultrasonicate for 30 minutes and filter. Evaporate the filtrate to dryness, dissolve the residue in 20 ml of water, add 2 ml of hydrochloric acid, and heat on a water bath for 30 minutes. Allow to cool, extract with two 20-ml quantities of ether, combine the extract, expel ether and dissolve the residue in 1 ml of ethyl acetate as the test solution. Prepare a solution of 0.1 g of Radix et Rhizoma Rhei reference drug in the same manner as the reference drug solution. Carry out the method for thin layer chromatography (Appendix Ⅵ B), using silica gel G as the coating substance and the upper layer of a mixture of petroleum ether (30-60℃), ethyl formate and formic acid (15 : 5 : 1) as the mobile phase. Apply separately 10 μl of each of the test solution and the reference solution to the plate. After developing and removal of the plate, dry in air and examine under the ultraviolet light at 365 nm. The five orange fluorescence spots in the chromatogram obtained with the test solution correspond in position and colour to the fluorescence spots in the chromatogram obtained with the reference drug solution. Expose the plate to ammonia vapour, the spots turn to red colour.

(2) Heat under reflux 15 g, or 4.5 g (without sucrose) of granules, in 40 ml of methanol for 1 hour, filter and evaporate the filtrate to dryness. Dissolve the residue in 15 ml of water, adjust pH value to 2 with dilute hydrochloride acid TS, extract with two 20-ml of ethyl acetate, combine the extracts and evaporate to dryness. Dissolve the residue in 0.5 ml of methanol as the test solution. Dissolve baicalin CRS in methanol to prepare a solution containing 1 mg per ml as the reference solution. Carry out the method for thin layer chromatography (Appendix Ⅵ B), using silica gel G as the coating substance and a mixture of ethyl acetate, butanone, formic acid and water (5 : 3 : 1 : 1) as the mobile phase. Apply separately 10 μl of each of the test solution and the reference solution to the plate. After developing and removal of the plate, dry in air. Spray with 1% ferric chloride in ethanol. The spot in the chromatogram obtained with the test solution corresponds in position and colour to that in the chromatogram obtained with the reference solution.

Other requirements Comply with the general requirements for granules (Appendix Ⅰ C).

Assay Carry out the method for high performance liquid chromatography (Appendix Ⅵ D).

Chromatographic system and system suitability Use octadecylsilane bonded silica gel as the stationary phase and a mixture of methanol, water and phosphoric acid (47 : 53 : 0.2) as the mobile phase. As detector a spectrophotometer set at 280 nm. The number of the theoretical plates of the column is not less than 3500, calculated with reference to the peak of baicalin.

Reference solution Dissolve a quantity of baicalin CRS, weighed accurately in methanol to prepare a solution containing 60 μg per ml as the reference solution.

Test solution Weigh accurately 4 g, or 1.2 g (without sucrose) of the granules, obtained under the test of weight variation and mixed thoroughly and triturated, in a stopper conical flask, add accurately 50 ml of 50% methanol, weigh and ultrasonicate (power 250 W, frequency 33 kHz) for 30 minutes, and allow to cool, weigh again and replenish the lost weight with the same solvent. Mix thoroughly, filter and use the successive filtrate as the test solution.

Procedure Inject accurately 10 μl of each of the reference solution and the test solution into the column, and calculate the content.

It contains not less than 12.0 mg of baicalin ($C_{21}H_{18}O_{11}$) per pack, referred to Radix Scutellariae.

Action To clear the lung and ease the throat, and relieve *toxicity* and subside fever.

Indications Dry and painful pharynx, red swollen tonsil,

swollen painful cheeks, fever and aversion to cold due to affliction from external *wind-heat*; acute tonsillitis, acute pharyngitis and mumps with above symptoms.

Usage and dosage Taken after dissolved in boiled water. 1 pack, 3-4 times a day.

Precaution Avoid pungent, spicy and too salty foods.

Strength (1) 20 g per pack (equivalent to 19 g of crude drugs) (2) 6 g per pack (without sucrose, equivalent to 19 g of crude drugs)

Storage Preserve in well closed containers.

Longdan Xiegan Wan (Damiwan) (龙胆泻肝丸，大蜜丸)

Longdan Xiegan Pills (Big Honeyed pills)

Ingredients Same as Longdan Xiegan Pills (Shuiwan).

Procedure Pulverize the above 10 ingredients to fine powder, sift and mix well. To each 100 g of powder add 160-170 g of refined honey to make big honeyed pills.

Description Yellowish-brown big honeyed pills; taste, bitter and slightly sweet.

Identification Comply with the test of Identification (1) as described under Longdan xiegan pills (shuiwan).

Other requirements Comply with the general requirements for pills (Appendix Ⅰ A).

Action To clear the liver and gallbladder and remove *damp-heat*.

Indications Dizziness, bloodshot eyes, tinnitus, poor hearing or deafness, swollen painful ears, hypochondriac pain, bitter taste in the mouth, deep-coloured urine and difficult painful urination, or morbid leukorrhea due to *damp-heat* in the liver and gallbladder.

Usage and dosage 1-2 pills, 2 times a day.

Precaution Be cautious about pregnant women.

Strength 6 g per pill

Storage Preserve in tightly closed containers.

Longdan Xiegan Wan (Shuiwan) (龙胆泻肝丸，水丸)

Longdan Xiegan Pills (Watered pills)

Ingredients Radix et Rhizoma Gentianae 120 g; Radix Bupleuri 120 g; Radix Scutellariae 60 g; Fructus Gardeniae (stir-baked) 60 g; Rhizoma Alismatis 120 g; Caulis Akebiae 60 g; Semen Plantaginis (stir-baked with salt) 60 g; Radix Angelicae Sinensis (stir-baked with wine) 60 g; Radix Rehmanniae 120 g; Radix et Rhizoma Glycyrrhizae Praeparata Cum Melle 60 g.

Procedure Pulverize the above ten ingredients to fine powder, sift and mix well. Make pills with water and dry.

Description Dark yellow watered pills; taste, bitter.

Identification (1) Microscopical: Fibre bundles surrounded by parenchymatous cells containing prisms of calcium oxalate, forming crystal fibres. Fibres pale yellow, fusiform, with thickened walls and fine pit-canals. Stone cells of testa yellow or brownish, mostly broken, the whole ones elongated polygonal, rectangular or irregular, with thickened walls and large rounded pits, lumina brownish-red. Parenchymatous cells subrounded, with elliptical pits gathered into pit groups the anticlinal walls of the endodermis cell sinuous, thickened, lignified, with slender pit-canals. Hypodermal cells of testa narrow and long in surface view, walls slightly sinuous, several cells arranged in a group and somewhat parqueted. Parenchyma greyish-brown to blackish-brown, cells mostly shrunken, and each containing a nucleus-like mass. Exodermal cells fusiform in surface view, each divided into several small cells by transversal walls. Vittae containing yellow or brownish-yellow strip secretion, 8-25 μm in diameter.

(2) Heat under reflux 14 g of the pills, in fine powder, with 20 ml of *n*-hexane on a water bath for 2 hours, filter and discard the filtrate. Heat under reflux the residue with 20 ml of acetone on a water bath for 30 minutes, filter and discard the filtrate. Macerate the residue in 20 ml of methanol for 12 hours and filter. Concentrate the filtrate to about 1 ml, apply to a column, (15 mm in inner diameter), packed with neutral aluminium oxide (120 mesh, 1 g) and elute with methanol until the eluate becomes colourless. Concentrate the eluate to 1 ml as the test solution. Dissolve gentiopicrin CRS in methanol to produce a solution containing 0.5 mg per ml as the reference solution. Carry out the method for thin layer chromatography (Appendix Ⅵ B), using silica gel GF_{254} as the coating substance and the lower layer of a mixture of chloroform, methanol and water (30 : 10 : 3) as the mobile phase. Apply separately 2 μl of each of the two solutions to the plate. After developing and removal of the plate, dry in air, and examine under ultraviolet light at 254 nm. The spot in the chromatogram obtained with the test solution corresponds in position and colour to the spot in the chromatogram obtained with the reference solution.

(3) Pulverize 7 g of the pills, add 100 ml of the ethanol, ultrasonicate for 30 minutes, and filter. Evaporate the filtrate to dryness, and dissolve the residue in 20 ml of water, wash with three 15-ml quantities of ether, discard the ether washings. Extract the water layer with three 20-ml quantities of *n*-butanol saturated with water, combine the *n*-butanol extracts. Evaporate the *n*-butanol extract to dryness, and dissolve the residue in 1 ml of ethanol, add a quantity of neutral aluminium oxide, stir well on a water bath, dry. Apply to a column (1.0-1.5 cm in internal diameter) packed with neutral aluminium oxide (100-200 mesh, 2 g). Elute with 50 ml of methanol, collect the methanol eluate. Evaporate to dryness and dissolve the residue in 1 ml of ethanol as the test solution. Dissolve a quantity of geniposide CRS in methanol to produce a solution containing 1 mg per ml as the reference solution. Carry out the method for thin layer chromatography (Appendix Ⅵ B), using silica gel G as the coating substance and a mixture of ethyl acetate, acetone, formic acid and water (5 : 5 : 1 : 1) as the mobile phase. Apply separately 5 μl of each of the above solutions to the plate. After developing and removal of the plate, dry in air. Spray with 10% sulfuric acid in ethanol, and heat at 110℃ to the spots clear. The spot in the chromatogram obtained with the test solution corresponds in position and colour to the spot in the chromatogram obtained with the reference solution.

Other requirements Comply with the general requirements for pills (Appendix Ⅰ A).

Assay Carry out the method for high performance liquid chromatography (Appendix Ⅵ D).

Chromatographic system and system suitability Use octadecylsilane bonded silica gel as the stationary phase and a mixture of methanol and water (23 : 77) as the mobile phase. As detector a spectrophotometer set at 270 nm,

maintain the column temperature at 40℃. The number of the theoretical plates of the column is not less than 2500, calculated with the reference to the peak of gentiopicrin.

Reference solution Dissolve a quantity of gentiopicrin CRS, accurately weighed, in methanol to prepare a solution containing 40 μg per ml.

Test solution Pulverize a quantity of granules to fine powder. Weigh accurately 1 g, place to a stopper conical flask and add accurately 25 ml of methanol, and weigh. Ultrasonicate (power 250 W, frequency 33 kHz) for 45 minutes, allow to cool. Weigh again and replenish the lost weight with methanol, mix well and filter, use the successive filtrate as the test solution.

Procedure Inject accurately 10 μl of the reference solution and 20 μl of the test solution into the column, and calculate the content.

It contains not less than 0.80 mg of gentiopicrin ($C_{16}H_{20}O_9$) per gram, referred to Radix et Rhizoma Gentianae.

Action To clear the liver and gallbladder and remove *damp-heat*.

Indications Dizziness, bloodshot eyes, tinnitus, poor hearing or deafness, swollen painful ears, hypochondriac pain, bitter taste in the mouth, deep-coloured urine and difficult painful urination, or morbid leukorrhea due to *damp-heat* in the liver and gallbladder.

Usage and dosage 3-6 g, twice a day.

Precaution Used with caution in pregnancy.

Storage Preserve in well closed containers, protected from moisture.

Longmu Zhuanggu Keli (龙牡壮骨颗粒)

Longmu Zhuanggu Granules

Ingredients Radix Codonopsis; Radix Astragali; Radix Ophiopogonis; Carapax et Plastrum Testudinis (processed with vinegar); Rhizoma Atractylodis Macrocephalae (baked); Rhizoma Dioscoreae; Fructus Schisandrae Chinensis (processed with vinegar); Os Draconis; Concha Ostreae (calcined); Poria; Fructus Jujubae; Radix et Rhizoma Glycyrrhizae; Calcium Lactate; Endothelium Corneum Gigeriae Galli (baked); Vitamine D_2; Calcium Gluconate.

Procedure Decoct Radix Codonopsis, Radix Astragali, Radix Ophiopogonis, Rhizoma Atractylodis Macrocephalae, Rhizoma Dioscoreae, Fructus Schisandrae Chinensis, Poria, Fructus Jujubae and Radix et Rhizoma Glycyrrhizae with water for three times, 2 hours for each time, combine the decoction, filter; decoct Carapax et Plastrum Testudinis, Os Draconis and Concha Ostreae with water for four times, 2 hours for each time, combine the decoction, filter. Combine all the filtrate, concentrate to a thin extract with a relative density of 1.32 (20℃). To the thin extract, add sucrose, powder of Endothelium Corneum Gigeriae Galli, Calcium Lactate, Calcium Gluconate and Vitamine D_2, mix thoroughly, make granules, dry and make to 1000 g.

Description Yellow or yellowish-brown granules; taste, sweet.

Identification (1) Triturate 3g, add 15 ml of water, then add a small amount of active carbon to decolourize, filter, adjust pH of the filtrate to acidity, add ammonium oxalate TS; a white precipitate is produced; centrifuge, the precipitate is insoluble in acetic acid, but soluble in hydrochloric acid.

(2) Triturate 30 g, add 100 ml of *n*-butanol, ultrasonicate for 1 hour, filter, wash the filtrate with three 35-ml quantities of 1% solution of sodium hydroxide. Discard the alkaline solution, continue to wash with water saturated with *n*-butanol to neutral. Discard the aqueous layer, evaporate the *n*-butanol extract to dryness on a water bath, dissolve the residue in 1 ml of methanol as the test solution. Dissolve astragaloside Ⅳ CRS in methanol to produce a solution containing 1 mg per ml as the reference solution. Carry out the method for thin layer chromatography (Appendix Ⅵ B), using silica gel G as the coating substance and the lower layer of a mixture of chloroform, ethyl acetate, methanol and water (10 : 20 : 11 : 5), stood at a temperature below 10℃, as the mobile phase. Apply separately 10μl of the test solution and 2μl of the reference solution to the plate. After developing and removal of the plate, dry in air. Spray with 10% sulfuric acid in ethanol, heat at 105℃ for about 5 minutes. The brown spot in the chromatogram obtained with the test solution corresponds in position and colour to the spot in the chromatogram obtained with the reference solution; examine under ultraviolet light at 365 nm, the fluorescence spots are shown.

(3) Triturate 10g, add 35 ml of petroleum ether (30-60℃), ultrasonicate for 30 minutes, filter, evaporate the filtrate to dryness, dissolve the residue in 10 ml of methanol as the test solution. Dissolve vitamin D_2 in methanol to produce a solution containing 0.01 mg per ml as the reference solution. Carry out the method for high performance liquid chromatography (Appendix Ⅵ D), using a column packed with octadecylsilane bonded silica gel as the stationary phase and methanol as the mobile phase, detect at the wavelength of 265 nm, inject separately 10μl of each of above two solutions into the column and measure; the retention time of principal peak in the chromatogram obtained with the test solution corresponds to that of the peak in the chromatogram obtained with the reference solution.

Other requirements Comply with the general requirements for granules (Appendix Ⅰ C), except solubility.

Assay ***Reference solution*** Weigh accurately 60 mg of calcium carbonate, dried to constant weight at 110℃, in a 100 ml volumetric flask, moisten with 10 ml of water, and add 5 ml of dilute hydrochloric acid TS to dissolve, dilute with water to volume and mix well. Measure accurately 25 ml in a 100 ml volumetric flask and dilute with water to volume and mix well. Transfer 1.0, 1.5, 2.0, 2.5, and 3.0 ml, accurately measured, to a 25 ml volumetric flasks separately, add separately 1 ml of lanthanum TS, dilute with water to volume and mix well.

Test solution Weigh accurately 0.5 g, obtained in the test of weight variation and triturated to fine powder, in a 100 ml volumetric flask, moisten with 10 ml of water, add 5 ml of hydrochloric acid to dissolve, dilute with water to volume and mix well. Filter, measure accurately 2 ml of the successive filtrate in a 25 ml volumetric flask, add 1 ml of lanthanum TS, dilute with water to volume and mix well.

Procedure Carry out the method for atomic absorption spectrophotometry (Appendix Ⅴ D, method I), measure separately the absorbance of above two solutions at 422.7 nm and calculate.

It contains not less than 45.0 mg of calcium (Ca) per pack.

Action To strengthen the muscles, tendons and bones, and harmonize the stomach and invigorate the spleen.

Indications Used for treatment and prevention of child rachitis and rickets; also for child profuse perspiration,

night-terrors, anorexia, dyspepsia, developmental retardation, etc.

Usage and dosage Taken after dissolved in boiled water, 5 g, for children younger than 2 years old; 7 g, for children between 2 and 7 years old; 10 g, for children older than 7 years; 3 times a day.

Strength 5 g per pack

Storage Preserve in tightly closed containers.

Longqing Pian
(癃清片)
Longqing Tablets

Ingredients Rhizoma Alismatis; Semen Plantaginis; Herba Patriniae; Flos Lonicerae Japonicae; Cortex Moutan; Herba Hedyotis Diffusae; Radix Paeoniae Rubra; Herba Agrimoniae; Rhizoma Coptidis; Cortex Phellodendri Chinensis.

Procedure Pulverize Rhizoma Alismatis to fine powder and sift. Decoct Herba Hedyotis Diffusae, Herba Agrimoniae, Flos Lonicerae Japonicae and Herba Patriniae with water twice, 1 hour for each time, combine the decoction, filter and concentrate the filtrate to a thin extract with a relative density of 1.25-1.30 (50℃). Heat under reflux the other five ingredients with 60% ethanol for 3 times, 3 hours for the first time, 2 hours for the second, and 1 hour for the third, combine the extract, filter and recover ethanol, concentrate to a thin extract with a relative density of 1.25-1.30 (50℃). Combine the above two thin extracts, add the fine powder, mix thoroughly, make granules, dry and make to tablets.

Description Brown tablets; odour, aromatic; taste, slightly bitter.

Identification (1) Microscopical: Parenchymatous cells subrounded, with many elliptical pits crowed into pitted area; anticlinal walls of endodermis cells sinuous, relatively thick, lignified, with sparse and minute pit-canals.
(2) Heat under reflux 8 tablets, triturated to fine powder, with 40 ml of methanol for 1 hour, filter and concentrate the filtrate to 5 ml as the test solution. Dissolve berberine hydrochloride CRS in methanol to prepare a solution containing 1 mg per ml as the reference solution. Carry out the method for thin layer chromatography (Appendix Ⅳ B), using silica gel G mixed with sodium carboxymethylcellulose as the coating substance and a mixture of benzene, ethyl acetate, methanol, isopropanol and concentrated ammonia TS (12 : 6 : 3 : 3 : 1) as the mobile phase, pre-equilibrated the chamber with ammonia vapour. Apply separately 2 μl of each of the above two solutions to the plate. After developing and removal of the plate, dry in air, examine under ultraviolet light at 365 nm. The fluorescent spot in the chromatogram obtained with the test solution corresponds in position and colour to the spot in the chromatogram obtained with the reference solution.
(3) Macerate 8 tablets, triturated to fine powder, in 10 ml of ether, ultrasonicate for 20 minutes, filter, expel the solvent and dissolve the residue in 2 ml of acetone as the test solution. Dissolve paeonol CRS in acetone to produce a solution containing 1 mg per ml as the reference solution. Carry out the method for thin layer chromatography (Appendix Ⅵ B), using silica gel G mixed with sodium carboxymethylcellulose as the coating substances and a mixture of cyclohexane and ethyl acetate (3 : 1) as the mobile phase. Apply separately 10 μl each of the above two solutions to the plate. After developing and removal of the plate, dry in air. Spray with 5% ferric chloride in ethanol acidified with hydrochloric acid, heat at 105℃ to the spots clear. The spot in the chromatogram obtained with the test solution corresponds in position and colour to the spot in the chromatogram obtained with the reference solution.
(4) Heat 16 tablets, triturated to fine powder, with 50 ml of water on a water bath for 30 minutes, filter, extract the filtrate with three 30-ml quantities of ethyl acetate, combine the extract, recover the solvent and concentrate to 2 ml as the test solution. Dissolve paeoniflorin CRS in ethanol to produce a solution containing 1 mg per ml as the reference solution. Carry out the method for thin layer chromatography (Appendix Ⅵ B), using silica gel G mixed with sodium carboxymethylcellulose as the coating substances and the lower layer of a mixture of chloroform, methanol and water (7 : 3 : 1) as the mobile phase. Apply separately 10 μl of each of the above two solutions to the plate. After developing and removal of the plate, dry in air. Spray with sulfuric acid in ethanol (1→2), heat at 105℃ to the spots clear. The spot in the chromatogram obtained with the test solution corresponds in position and colour to the spot in the chromatogram obtained with the reference solution.

Other requirements Comply with the general requirements for tablets (Appendix Ⅰ O).

Assay Carry out the method for high performance liquid chromatography (Appendix Ⅵ D).

Chromatographic system and system suitability Use octadecylsilane bonded silica gel as the stationary phase and a mixture of 0.05 mol/L solution of sodium dihydrogen phosphate (adjust pH value to 3 with phosphoric acid) and acetonitrile (70 : 30) as the mobile phase. As detector a spectrophotometer set at 270 nm. The number of theoretical plates of the column is not less than 4200, calculated with the reference to the peak of berberine hydrochloride.

Reference solution Dissolve a quantity of berberine hydrochloride CRS, weighed accurately, in dilute ethanol TS to prepare a solution containing 25 μg per ml as the reference solution.

Test solution Weigh accurately 20 tablets, triturate to fine powder, weigh accurately 100 mg of the fine powder in a stopper conical flask, add accurately 50 ml of dilute ethanol TS, weigh, ultrasonicate (power 250 W, frequency 33 kHz) for 30 minutes, allow to cool, weigh again and replenish the lost weight with dilute ethanol TS, mix thoroughly, filter. Use the successive filtrate as the test solution.

Procedure Inject accurately 10 μl of each of the reference solution and the test solution into the column and determine. It contains not less than 3.0 mg of berberine hydrochloride ($C_{20}H_{18}ClNO_4$) per tablet, referred to Rhizoma Coptidis and Cortex Phellodendri Chinensis.

Action To clear *heat* and relieve *toxicity*, and cool blood to relieve stranguria.

Indications Stranguria due to *damp-heat* in the *lower-energizer* with manifestation of frequency, urgency and pain in micturition, lower back pain, bearing-down feeling in the lower abdomen.

Usage and dosage 6 tablets, 2 times a day; 8 tablets, 3 times a day for serious patients.

Precaution Contraindicated for debilitated patients or patients with *stomach-cold*.

Strength 0.6 g per tablet

Storage Preserve in tightly closed containers.

Lusika Wan
(鹭鸶咯丸)

Lusika Pills

Ingredients Herba Ephedrae 12 g; Semen Armeniacae Amarum 60 g; Gypsum Fibrosum 60 g; Radix et Rhizoma Glycyrrhizae 12 g; Radix et Rhizoma Asari 6 g; Fructus Perillae (stir-baked) 60 g; Semen Sinapis (stir-baked) 12 g; Fructus Arctii (stir-baked) 30 g; Pericarpium Trichosanthis 60 g; Rhizoma Belamcandae 30 g; Indigo Naturalis 30 g; Concha Meretricis seu Cyclinae 60 g; Radix Trichosanthis 60 g; Fructus Gardeniae (stir-baked with ginger) 60 g; Calculus Bovis Artifactus 5 g.

Procedure Pulverize the above ingredients, except Calculus Bovis Artifactus, to fine powder. Triturate Calculus Bovis Artifactus with the above fine powder, sift and mix well. To each 100 g of the powder add 90-100 g of refined honey to make big honeyed pills.

Description Blackish-green big honeyed pills; odour, slight; taste, sweet and bitter.

Identification (1) Microscopical: Irregular plate crystals colourless, with straight striations. Bordered pitted vessels large, mostly broken, some bordered pits hexagonal or rhombic, closely arranged. Stone cells of pericarp subrounded or polygonal, 17-31 μm in diameter, wall-thickened, lumina containing prisms of calcium oxalate. Cells of testa subrounded, oblong or irregular, walls thickened reticulately, like flowerage striation. Irregular pieces or grains blue. Cylindrical crystals of calcium oxalate, up to 34 μm in diameter. Stomata characteristic, guard cells dumbbell-shaped in lateral view. Palisade cells of testa short fusiform in surface view and oblique rectangular in lateral view, walls relatively thickened, slightly lignified, and often adhered with brown endocarp cells containing prisms of calcium oxalate. Fibre bundles surrounded by parenchymatous cells containing prisms of calcium oxalate, forming crystal fibres.

(2) Heat under reflux 9 g of the pills, cut into pieces, with 20 ml of ethyl acetate on a water bath for 0.5 hour. Filter, evaporate the filtrate to dryness and dissolve the residue in 1 ml of chloroform as the test solution. Dissolve a quantity of indigotin CRS and indirubin CRS in chloroform to produce a mixture containing 1 mg of each per ml as the reference solution. Carry out the method for chromatography (Appendix Ⅵ B), using silica gel G as the coating substance and a mixture of benzene, chloroform and acetone (5 : 4 : 1) as the mobile phase. Apply separately 5 μl of each of the two solutions to the plate. After developing and removal of the plate, dry in air, the spots in the chromatogram obtained with the test solution correspond in position and colour to the spots in the chromatogram obtained with the reference solution.

(3) Triturate well 15 g of the pills with 7.5 g of kieselguhr. Heat under reflux with 30 ml of chloroform for 1 hour and filter. Evaporate the filtrate to dryness, dissolve the residue in 10 ml of ethanol as the test solution. Dissolve a quantity of arctiin CRS in ethanol to produce a solution containing 5 mg per ml as the reference solution. Carry out the method for thin layer chromatography (Appendix Ⅵ B), using silica gel GF_{254} as the coating substance and a mixture of chloroform and methanol (20 : 3) as the mobile phase. Apply separately 3 μl of the test solution and 2 μl of the reference solution to the plate. After developing and removal of the plate, dry in air. Examine under the ultraviolet light at 254 nm, the spot in the chromatogram obtained with the test solution corresponds in position and colour to the spot in the chromatogram obtained with the the reference solution.

(4) Triturate well 6 g of the pills with 3 g of kieselguhr. Macerate in 25 ml of ether for 1 hour and shake, filter. Discard the ether extract, evaporate the drug residue to dryness, add 25 ml of ethyl acetate, ultrasonicate for 30 minutes, allow to cool, filter, dissolve the residue in 1 ml of ethanol as the test solution. Prepare a solution of 0.5 g of the Frutus Gardeniae reference drug in the same manner as the reference drug solution. Dissolve a quantity of geniposide CRS in ethanol to prepare a solution containing 1 mg per ml as the reference solution. Carry out the method for thin layer chromatography (Appendix Ⅵ B), using silica gel G as the coating substance and a mixture of ethyl acetate, acetone, formic acid and water (12 : 10 : 1 : 1) as the mobile phase. Apply separately 5 μl of the test solution and 3 μl of each of the reference solution and the reference drug solution to the plate. After developing and removal of the plate, dry in air. Spray with 5% vanillin in ethanol, and heat at 105℃ to the spots clear. The spots in the chromatogram obtained with the test solution correspond in position and colour to the spots in the chromatogram obtained with the reference drug solution and the reference solution.

(5) Dissolve separately a quantity of cholic acid CRS and hyodeoxycholic acid CRS in ethanol to prepare two kinds of reference solutions containing 1 mg per ml. Carry out the method for thin layer chromatography (Appendix Ⅵ B), using silica gel G as the coating substance and a mixture of chloroform, ether and glacial acetic acid (2 : 2 : 1) as the mobile phase. Apply separately 1 μl of the test solution of Identification (4) and 3 μl of each of the reference solution to the plate. After developing and removal of the plate, dry in air. Spray with 10% sulfuric acid in ethanol, and heat at 105℃ to the spots clear. Examine under ultraviolet light at 365 nm. The fluorescent spots in the chromatogram obtained with the test solution correspond in position and colour to the spots in the chromatogram obtained with the reference solutions.

Other requirements Comply with the general requirements for pills (Appendix Ⅰ A).

Assay Carry out the method for high performance liquid chromatography (Appendix Ⅵ D)

Chromatographic system and system suitability Use octadecylsilane bonded silica gel as the stationary phase and a mixture of acetonitrile and water (15 : 85) as the mobile phase. As detector a spectrophotometer set at 238 nm. The number of the theoretical plates of the column is not less than 1500, calculated with the reference to the peak of geniposide.

Reference solution Dissolve a quantity of geniposide CRS, accurately weighed, in methanol to prepare a solution containing 30 μg per ml.

Test solution Triturate the pills, obtained under the test of weight variation. Weight accurately 0.5 g, place to a stopper conical flask and add accurately 50 ml of methanol, and weigh. Ultrasonicate (power, 250 W; frequency, 50 kHz) for 30 minutes, allow to cool. Weigh again and replenish the lost weight with methanol, mix well and filter, use the successive filtrate as the test solution.

Procedure Inject accurately 10 μl of the reference solution and 20 μl of the test solution into the column, and calculate the content.

It contains no less than 1.4 mg of geniposide ($C_{17}H_{24}O_{10}$) per pill, referred to Frutus Gardeniae

Action To disseminate the lung, resolve *phlegm* and stop coughing.

ɹughing or coughing due to phlegm with manifestations of paroxysmal dry throat and hoarseness; whooping ɹptoms.

pill, twice a day. Taken with decoction of pear ɹ. ɹled water.

Strength 1. 5 g per pill

Storage Preserve in tightly closed containers.

Maiwei Dihuang Wan
(麦味地黄丸)

Maiwei Dihuang Pills

Ingredients Radix Ophiopogonis 60 g; Fructus Schisandrae Chinensis 40 g; Radix Rehmanniae Praeparata 160 g; Fructus Corni (processed) 80 g; Cortex Moutan 60 g; Rhizoma Dioscoreae 80 g; Poria 60 g; Rhizoma Alismatis 60 g.

Procedure Pulverize the above eight ingredients to fine powder, sift and mix well. To each 100 g of the powder add 35-50 g of refined honey and a quantity of water, make water-honeyed pills and dry; alternatively, add 80-110 g of refined honey, to make small honeyed pills or big honeyed pills.

Description Brownish-black water-honeyed pills, blackish-brown small honeyed pills or big honeyed pills; taste, slightly sweet and sour.

Identification (1) Microscopical: Starch granules triangular-ovoid or oblong, 24-40 μm in diameter, hilum short cleft or V-shaped. Irregular branched masses colourless, dissolved in chloral hydrate TS; hyphae colourless or pale brown, 4-6 μm in diameter. Parenchyma greyish-brown to blackish-brown, cells mostly shrunken and each containing a brown nucleus-like mass. Needles of calcium oxalate in bundles or scattered, 24-50 μm long, about 3 μm in diameter. Clusters of calcium oxalate occurring in colourless parenchymatous cells, sometimes several in rows. Epidermal cells of pericarp orange yellow, subpolygonal in surface view, with beaded anticlinal walls. Stone cells of epidermis of testa pale yellowish-brown, subpolygonal in surface view, walls relatively thickened, with fine and dense pit-canals, lumina containing dark brown contents. Parenchymatous cells subrounded, with elliptical pits gathered into pit groups. Anticlinal walls of endodermal cells sinuous, relatively thickened, lignified, with sparse and fine pit-canals.

(2) Triturate well 9 g of small or big honeyed pills with 4 g of kieselguhr to powder, or pulverize 6 g of water honeyed pills to fine powder, heat under reflux with 40 ml of ether for 1 hour, filter and remove the ether. Dissolve the residue in 1 ml of acetone as the test solution. Dissolve paeonol CRS in acetone to produce a solution containing 1 mg per ml as the reference solution. Carry out the method for thin layer chromatography (Appendix Ⅵ B), using silica gel G as the coating substance and a mixture of cyclohexane and ethyl acetate (3 : 1) as the mobile phase. Apply separately to the plate 10 μl of each of the two solutions in strip. After developing and removal of the plate, dry in air, spray with 5% ferric chloride in ethanol acidified with hydrochloric acid, and heat to the spots clear. The bluish-brown band in the chromatogram obtained with the test solution corresponds in position and colour to the band in the chromatogram obtained with the reference solution.

(3) Dissolve ursolic acid CRS in ethyl acetate to produce a solution containing 1 mg per ml as the reference solution. Carry out the method for thin layer chromatography (Appendix Ⅵ B), using silica gel G as the coating substance and a mixture of toluene, ethyl acetate and glacial acetic acid (12 : 4 : 0.5) as the mobile phase. Apply separately to the plate 5 μl each of the test solution obtained under the test of Identification (2) and the reference solution. After developing and removal of the plate, dry in air, spray with 10% sulfuric acid in ethanol and heat at 105℃ for several minutes. The purplish-red spot in the chromatogram obtained with the test solution corresponds in position and colour to the spot in the chromatogram obtained with the reference solution.

(4) Dissolve deoxyschizandrin CRS in ethyl acetate to produce a solution containing 1 mg per ml as the reference solution. Carry out the method for thin layer chromatography (Appendix Ⅵ B), using silica gel GF_{254} as the coating substance and the upper layer of a mixture of petroleum ether (30-60℃), ethyl formate and formic acid (15 : 5 : 1) as the mobile phase. Apply separately to the plate 10 μl of the reference solution and 15 μl of the test solution obtained under the test of Identification (2). After developing and removal of the plate, dry in air, and examine under ultraviolet light at 254 nm. The spot in the chromatogram obtained with the test solution corresponds in position and colour to the spot in the chromatogram obtained with the reference solution.

Other requirements Comply with the general requirements for pills (Appendix Ⅰ A).

Assay ***Fructus Corni*** Carry out the method for high performance liquid chromatography (Appendix Ⅵ D).

Chromatographic system and system suitability Use octadecylsilane bonded silica gel as the stationary phase and a mixture of tetrahydrofuran, acetonitrile, methanol and 0.1% phosphoric acid (1 : 8 : 4 : 87) as the mobile phase. As detector a spectrophotometer set at 236 nm. Maintain the column temperature at 40℃. The number of theoretical plates of the column is not less than 4000, calculated with the reference to the peak of loganin.

Reference solution Dissolve a quantity of loganin CRS, accurately weighed, in 50% methanol to prepare a solution containing 40 μg per ml as the reference solution.

Test solution Grind the water-honeyed pills or small honeyed pills, weigh accurately 0.7 g, or cut the big honeyed pills, obtained under the test of weight variation, into pieces, weigh accurately 1 g, in a stopper conical flask, add accurately 25 ml of 50% methanol, and weigh. Ultrasonicate (power, 250 W; frequency, 33 kHz) for 15 minutes, heat under reflux for 1 hour, cool, weigh again, replenish the loss of weight with 50% methanol, shake well and filter. Apply accurately 10 ml of the successive filtrate to a neutral alumina column (100-200 mesh, 4 g, 1 cm in diameter), elute with 50 ml of 40% methanol, collect the eluates, and evaporate to dryness. Dissolve the residue in 50% methanol and transfer to a 5 ml volumetric flask, add 50% methanol to volume, and shake well. Filter and use the successive filtrate as the test solution.

Procedure Inject accurately 10 μl of each of the reference solution and the test solution into the column, respectively, and calculate the content.

It contains not less than 0.50 mg per gram of the water-honeyed pills, 0.35 mg per gram of the small honeyed pills, and 3.1 mg per big honeyed pill, of loganin ($C_{17}H_{26}O_{10}$), referred to Fructus Corni.

Cortex Moutan Carry out the method for high performance liquid chromatography (Appendix Ⅵ D).

Chromatographic system and system suitability Use

octadecylsilane bonded silica gel as the stationary phase and a mixture of methanol and water (70 : 30) as the mobile phase. As detector a spectrophotometer set at 274 nm. The number of theoretical plates of the column is not less than 3500, calculated with the reference to the peak of paeonol.

Reference solution Dissolve a quantity of paeonol CRS, accurately weighed, in methanol to prepare a solution containing 15 μg per ml as the reference solution.

Test solution Grind the water-honeyed pills or small honeyed pills, weigh accurately 0.4 g, or cut the big honeyed pills, obtained under the test of weight variation, into pieces, weigh accurately 0.5g, in a stopper conical flask, add accurately 50 ml of 50% methanol, stopper well, and weigh. Ultrasonicate (power, 250 W; frequency, 33 kHz) for 45 minutes, cool, weigh again, replenish the loss of weight with 50% methanol, and shake well. Filter and use the successive filtrate as the test solution.

Procedure Inject accurately 10 μl of the reference solution and 20 μl of the test solution into the column, respectively, and calculate the content.
It contains not less than 0.80 mg per gram of the water-honeyed pills, 0.60 mg per gram of the small honeyed pills, and 5.40 mg per big honeyed pill, of paeonol ($C_9H_{10}O_3$), referred to Cortex Moutan.

Action To nourish the kidney and lung.

Indications Tidal fever and night sweat, dry throat, or hemoptysis, dizziness, tinnitus, aching and weakness in the lower back and knees, and diabetes due to a *yin* deficiency of the kidney and the lung.

Usage and dosage 6 g of water-honeyed pills, 9 g of small honeyed pills or 1 big honeyed pill, twice a day.

Strength 9 g per big honeyed pill

Storage Preserve in tightly closed containers.

Maqianzi San
(马钱子散)

Maqianzi Powder

Ingredients Semen Strychni (scalded with sand), a quantity (equal to 8.0 g of strychnine); Pheretima (removed from mud and baked to brown) 93.5 g.

Procedure Pulverize separately the above two ingredients to fine powder, triturate together and sift.

Description Yellowish-brown powder; odour, slight; taste, bitter.

Identification To 1 g of the powder, add several drops of concentrated ammonia TS and 10 ml of chloroform, macerate for several hours, filter, evaporate 1 ml of the filtrate to dryness. Dissolve the residue in 1 ml of dilute hydrochloric acid TS, and add 1-2 drops of potassium iodobismuthate TS, a yellowish-brown precipitate is produced.

Other requirements Comply with the general requirements for powders (Appendix I B).

Assay To 0.5 g of the powder, obtained under the test of weight variation, weighed accurately, in a stopper conical flask, add 20 ml of chloroform and 1 ml of concentrated ammonia TS accurately, shake gently and weigh, allow to stand at the room temperature for 24 hours, weigh again, replenish the lost weight, shake thoroughly and filter, use the filtrate as the test solution. Dissolve strychnine CRS, weighed accurately, in chloroform to produce a solution containing 1 mg per ml as the reference solution. Carry out the method for thin layer chromatography (Appendix VI B), using silica gel GF_{254} as the coating substance and the upper layer of toluene, acetone, ethanol and concentrated ammonia TS (16 : 12 : 1 : 4) as the mobile phase. Apply accurately 8 μl of the test solution and 4 μl of the reference solution to the plate. After developing and removal of the plate, dry in air. Carry out the method for thin layer chromatography (thin layer chromatographic scanning method, Appendix VI B), scan at wavelength of $\lambda_S = 257$ nm and $\lambda_R = 300$ nm. Measure the integrated absorbance values both of the test solution and reference solution respectively. Calculate the content.
It contains 7.2-8.8 mg of strychnine ($C_{21}H_{22}N_2O_2$) per bag referred to semen strychni.

Action To expel *wind-dampness* and dreadge meridians.

Indications Impediment disease due to accumulation of *wind-dampness* with manifestations of painful joints, arms and lower back, and muscular atrophy of limbs.

Usage and dosage 0.2 g or 0.4 g if no side-effects observed; maximum dosage 0.6 g, appropriate reduction of the dosage for aged and delibitated patients, taken with yellow rice wine or boiling water at night.

Precaution Heavy dosage is forbidden as it contains poisonous ingredients. Genelralized sweating, itching and shivery may occur 1 hour after taking it. Consult physicians in serious cases. It is forbidden to prescribe to children under 13 years old, pregnant women, debilitated persons and patients with heart disease, severe tracheitis or simple hypertention. Avoid raw and cold foods.

Strength 0.6 g per bag

Storage Preserve in tightly closed containers.

Maren Runchang Wan
(麻仁润肠丸)

Maren Runchang Pills

Ingredients Fructus Cannabis 120 g; Semen Armeniacae Amarum (peeled and stir-baked) 60 g; Radix et Rhizoma Rhei 120 g; Radix Aucklandiae 60 g; Pericarpium Citri Reticulatae 120 g; Radix Paeoniae Alba 60 g.

Procedure Pulverize the above six ingredients to fine powder, sift and mix well. To each 100 g of the powder add 140-160 g of refined honey to make big honeyed pills.

Description Yellowish-brown big honeyed pills; odour, slightly aromatic; taste, bitter, slightly sweet.

Identification (1) Microscopical: Clusters of calcium oxalate large, 60-140 μm in diameter. Prisms of calcim oxalate numerous, occurring in parenchymatous cells. Clusters of calcium oxalate 18-32 μm in diameter, occurring in parenchymatous cells, often arranged in rows or several in one cell.
(2) Heat under reflux 6 g of the pills, cut into pieces, triturate with 6 g of kieselguhr, in 50 ml of methanol for 30 minutes. Filter and evaporate the filtrate to dryness, dissolve the residue in 20 ml of water, add 1 ml of hydrochloric acid, heat under reflux for 30 minutes. Allow to cool, extract with two 20-ml quantities of ether, combine the ether extracts, evaporate to dryness, dissolve the residue in 1 ml of ethyl acetate as the test solution. Prepare a solution of 0.5 g of Radix et Rhizoma Rhei reference drug and 20 ml of methanol in the same manner as the reference drug solution. Carry out the method for thin layer

chromatography (Appendix Ⅵ B), using silica gel H mixed with sodium carboxymethylcellulose as the coating substance and the upper layer of the mixture of petroleum ether (30-60℃), ethyl formate, and formic acid (15 : 5 : 1) as the mobile phase. Apply separately 1-2 μl of each of the two solutions to the plate. After developing and removal of the plate, dry in air, examine under ultraviolet light at 365 nm, the five orange fluorescent spots in the chromatogram obtained with the test solution correspond in position and colour to the spots in the chromatogram obtained with the reference drug solution; expose to ammonia vapour, the spots turn red.

(3) To 6 g of the pills, cut into pieces, triturate well with 6 g of kieselguhr, add 50 ml of ether, and heat under reflux for 30 minutes. Filter, and evaporate to 2 ml as the test solution. Prepare a solution with 0.5 g of Radix Aucklandiae reference drug and 20 ml of ether in the same manner as the reference drug solution. Carry out the method for thin layer chromatography (Appendix Ⅵ B), using silica gel G as the coating substance and a mixture of cyclohexane and acetone (10 : 3) as the mobile phase. Apply separately 2 μl of the test solution and 1μl of the reference drug solution to the plate. After developing and removing the plate, dry in air. Spray with 1% vanillin in sulfuric acid, and heat at 105℃ for several minutes. The spots in the chromatogram obtained with the test solution correspond in position and colour to the spots in the chromatogram obtained with the reference drug solution.

(4) To 6 g of the pills, cut into pieces and triturate well with 6 g of kieselguhr, add 50 ml of methanol, and heat under reflux for 30 minutes. Filter, evaporate the filtrate to dryness, and dissolve the residue in 2 ml of ethanol as the test solution. Dissolve hesperidin CRS in methanol to produce a saturation solution as the reference solution. Carry out the method for thin layer chromatography (Appendix Ⅵ B), using silica gel G mixed with 0.5% solution of sodium hydroxide as the coating substance and a mixture of ethyl acetate, butanone, formic acid, and water (5 : 3 : 3 : 1) as the mobile phase. Apply separately 1 μl of the test solution and 2 μl of the reference solution to the plate. After developing and removing the plate, dry in air. Spray with 1% aluminium trichloride in methanol, and examine under ultraviolet light at 365 nm. The fluorescent spot in the chromatogram obtained with the test solution corresponds in position and colour to the spot in the chromatogram obtained with the reference solution.

Other requirements Comply with the general requirements for pills (Appendix Ⅰ A).

Assay Carry out the method for high performance liquid chromatography (Appendix Ⅵ D).

Chromatographic system and system suitability Use octadecylsilane bonded silica gel as the stationary phase and a mixture of methanol and 0.1% solution of phosphoric acid (85 : 15) as the mobile phase. As detector a spectrophotometer set at 254 nm. The number of theoretical plates of the column is not less than 2000, calculated with the reference to the peak of emodin.

Reference solution Weigh accurately a quantity of emodin CRS and chrysophanol CRS, dissolve in methanol to produce a mixture containing 5 μg of emodin per ml and 10 μg of chrysophanol per ml as the reference solution.

Test solution Cut a quantity of pills, obtained under the test of weight variation, into pieces. Weigh accurately 1g, triturate well with 1.5 g of kieselguhr, transfer to a Soxhlet's extractor, add a quantity of ethanol TS, and heat under reflux to the extract colourless. Transfer the extractive solution into a 50 ml volumetric flask, dilute to volume with dilute ethanol TS, and shake well. Measure accurately 10 ml of the solution into a flask, and evaporate to nearly dryness on a water bath. Add 15 ml of a mixture of hydrochloric acid and 30% solution of methanol (1 : 10), heat on a water bath for 1 hour, and cool immediately. Extract the solution with four 15-ml quantities of chloroform by shaking, combine the chloroform solution, and recover to dryness. Dissolve the residue in a quantity of methanol, transfer to a 10 ml volumetric flask, dilute to volume, mix well, filter, and use the successive filtrate as the test solution.

Procedure Inject accurately 10 μl of each of the reference solution and the test solution into the column, respectively, and calculate the content.

It contains not less than 4.0 mg of total amount of emodin ($C_{15}H_{10}O_5$) and chrysophanol ($C_{15}H_{10}O_4$) per pill, referred to Radix et Rhizoma Rhei.

Action To moisten the intestines to relieve constipation.

Indications Fullness in the chest and abdomen and constipation due to *heat* accumulated in the intestines and stomach.

Usage and dosage 1-2 pills, twice a day.

Precaution Contraindicated for pregnant women.

Strength 6 g per pill

Storage Preserve in tightly closed containers.

Maren Wan
(麻仁丸)

Maren Pills

Ingredients Fructus Cannabis 200 g; Semen Armeniacae Amarum 100 g; Radix et Rhizoma Rhei 200 g; Fructus Aurantii Immaturus (stir-baked) 200 g; Cortex Magnoliae Officinalis (processed with ginger) 100 g; Radix Paeoniae Alba (stir-baked) 200 g.

Procedure Pulverize the above six ingredients, except Fructus Cannabis and Semen Armeniacae Amarum, to fine powder, then pulverize with Fructus Cannabis and Semen Armeniacae Amarum to fine powder, sift and mix well. To each 100 g of the powder add 30-40 g of refined honey and appropriate quantity of water, make water-honeyed pills and dry. Alternatively, add 90-110 g of refined honey to make small honeyed pills or big honeyed pills.

Description Yellowish-brown water-honeyed pills, small honeyed pills or big honeyed pills; taste, bitter.

Identification (1) Microscopical: Stone cells of pericarp pale yellow to reddish-brown, polygonal in surface view, walls thickened. Stone cells orange, conchoidal, walls relatively thickened, with distinct pits in the broad side. Clusters of calcium oxalate large, 60-140 μm in diameter. Clusters of calcium oxalate 18-32 μm in diameter, occurring in parenchymatous cells, frequently in rows or several clusters in one cell. Prisms of calcium oxalate abundant in parenchyma. Oil cells elliptical or subrounded, 50-80 μm in diameter, containing brownish-yellow oily contents.

(2) Pulverize 2.5 g of water-honeyed pills to fine powder; or triturate well 5 g of small honeyed pills or big honeyed pills, in pieces, with 3 g of kieselguhr. Add 10 ml of ether, and ultrasonicate for 10 minutes. Filter, and evaporate the filtrate to about 5 ml as the test solution. Prepare 1 ml of a solution with 0.5 g of Fructus Aurantii Immaturus reference drug in the same manner as the Fructus Aurantii Immaturus reference drug solution. To 0.1 g of Radix et Rhizoma Rhei reference drug, ultrasonicate with 20 ml of methanol for 15

minutes. Filter, evaporate 5 ml of the successive filtrate to dryness, and dissolve the residue in 10 ml of water. Add 1 ml of hydrochloric acid, heat on a water bath for 30 minutes, allow to cool, extract with two 20-ml quantities of ether, and combine the ether extracts and evaporate to dryness. Dissolve the residue in 1 ml of chloroform as the Radix et Rhizoma Rhei reference drug solution. Dissolve magnolol CRS in methanol to produce a solution containing 1 mg per ml as reference solution. Carry out the method for thin layer chromatography (Appendix Ⅵ B), using silica gel GF_{254} as the coating substance and the upper layer of the mixture of petroleum ether (30-60℃), ethyl formate, and formic acid (15 : 5 : 1) as the mobile phase. Apply separately 4 μl of each of the test solution and the two reference drug solutions, and 2 μl of the reference drug solution to the plate. After developing and removing the plate, and dry in the air. Examine under ultraviolet light at 365 nm, the main fluorescent spots in the chromatogram obtained with the test solution correspond in position and colour to the spots in the chromatogram obtained with the reference drug solutions; examine under ultraviolet light at 254 nm, the spots in the chromatogram obtained with the test solution correspond in position and colour to the spots in the chromatogram obtained with the reference drug solutions and the reference solution.

(3) Pulverize 2 g of water-honeyed pills to fine powder; or triturate well 4 g of small honeyed pills or big honeyed pills, in pieces, with 3 g of kieselguhr. Add 20 ml of ethanol, and ultrasonicate for 20 minutes. Filter, evaporate the filtrate to dryness, dissolve the residue in 20 ml of water, and extract with three 20-ml quantities of ether. Discard the ether solution, and extract the water solution with with three 20-ml quantities of *n*-butanol saturated with water. Combine the *n*-butanol solution, evaporate to dryness, and dissolve the residue in 1 ml of ethanol as the test solution. Dissolve paeoniflorin CRS in ethanol to produce a solution containing 1 mg per ml as reference solution. Carry out the method for thin layer chromatography (Appendix Ⅵ B), using silica gel G as the coating substance and chloroform, ethyl acetate, methanol, and formic acid (40 : 5 : 10 : 0.2) as the mobile phase. Apply separately 2 μl of each of the reference solution and the test solution to the plate. After developing and removing the plate, dry in air. Spray with 5% vanillin in sulfuric acid, heat to the spot clear. The spot in the chromatogram obtained with the test solution corresponds in position and colour to the spot in the chromatogram obtained with the reference solution.

Other requirements Comply with the general requirements for pills (Appendix Ⅰ A), except that the water-honeyed pills must disintegrate within two hours.

Assay Carry out the method for high performance liquid chromatographic (Appendix Ⅵ D).

Chromatographic system and system suitability Use octadecylsilane bonded silica gel as the stationary phase and a mixture of methanol and 0.1% solution of phosphoric acid (85 : 15) as the mobile phase. As detector a spectrophotometer set at 254 nm. The number of theoretical plates of the column is not less than 2000, calculated with the reference to the peak of emodin.

Reference solution Weigh accurately a quantity of emodin and chrysophanol CRS, dissolve in a mixture of ethyl acetate and dehydrated ethanol (1 : 2) to produce a mixture containing 10μg of emodin per ml and 50 μg of chrysophanol per ml as the reference solution.

Test solution Pulverize 20 g of water-honeyed pills or small honeyed pills to fine powder, or cut into pieces, mix well, and weigh accurately 0.8 g; or take a quantity of big honeyed pills, obtained under the test of weight variation, cut into pieces, mixed well, and weigh accurately 0.8 g. Transfer the pills into a Soxhlet's extractor, extract with a quantity of ethanol under reflux until the extract colourless, evaporate the extract to dryness on a water bath, dissolve the residue with 15 ml of a mixture of hydrochloric acid and 30% methanol (1 : 10), heat on a water bath for 50 minutes, and cool immediately. Extract the solution with five 15-ml quantities of chloroform by shaking, combine the chloroform solution, and recover to dryness. Dissolve the residue with a mixture of ethyl acetate and dehydrated ethanol (1 : 2), transfer to a 25 ml volumetric flask, dilute to volume, mix well and filter, and use the filtrate as the test solution.

Procedure Inject accurately 10 μl of each of the reference solution and the test solution into the column, respectively, and calculate the content.

It contains not less than 1.0 mg of total amount of emodin ($C_{15}H_{10}O_5$) and chrysophanol ($C_{15}H_{10}C_4$) per gram of the water honeyed pills, 0.50 mg per gram of the small honeyed pills, and 4.5 mg per big honeyed pill, referred to Radix and Rhizoma Rhei.

Action To moisten the intestines to relieve constipation.

Indications Constipation due to intestinal *heat* and consumption of *fluid* with manifestations of dry feces and abdominal fullness and discomfort.

Usage and dosage 6 g of water-honeyed pills, 9 g of small honeyed pills or 1 big honeyed pill, 1-2 times a day.

Strength 9 g per big honeyed pill

Storage Preserve in tightly closed containers.

Mayinglong Shexiang Zhichuang Gao (马应龙麝香痔疮膏)

Mayinglong Shexiang Zhichuang Ointments

Ingredients Moschus; Calculus Bovis Artifactus; Margarita; Calamina (calcined); Borax; Borneolum syntheticum; Succinum.

Procedure Pulverize the above seven ingredients to fine powder respectively, mix thoroughly; weigh 785 g of vaseline and 50 g of lanoline, heat and filter; cool to about 50℃, add the fine powders, stir well to a congealed fat state, make to 1000 g.

Description Pale greyish-yellow or pink ointments; odour, aromatic, followed by a sensation of cool.

Identification (1) Place 2g of ointments in a test tube with stopper, add 10ml of chloroform, dissolve the ointment base by shaking, allow to stand. Decant out the supernatant liquid, dry the residue, and observe. Microscopical: Irregular fragments colourless or pale green, semi-transparent, lustrous, and some showing very fine wavy striation.

(2) Heat 2g of ointments with 5ml of diluted hydrochloric acid on a water bath for 5 minutes, cool in ice water, filter. Add 6ml of 10% solution of sodium hydroxide to the filtrate, mix well and filter. To 1ml of filtrate, add 2ml of dilute hydrochloric acid and 2 drops of potassium ferrocyanide TS; a white precipitate is produced.

(3) Heat and melt 10g of ointments with 5ml of water on a water bath, stir well, cool, filter. Acidulate the filtrate with diluted hydrochloric acid, apply on a curcuma TP; a brownish-red spot is shown; allow it to dry in air, the colour deepens; moisten with ammonia TS, the spot becomes bluish-black immediately.

(4) Heat and melt 10g of ointments with 20ml of ethanol on a water bath. Stir for about 5 minutes, cool on an ice water bath for a while, remove and filter. Evaporate the filtrate to dryness on a water bath until no odour of borneol; dissolve the residue in 1ml of ethanol as the test solution. Dissolve cholic acid CRS in ethanol to produce a solution containing 0.5mg per ml as the reference solution. Carry out the method for thin layer chromatography (Appendix Ⅵ B), using silica gel G as the coating substance and a mixture of ethyl acetate, *n*-hexane, acetic acid, and methanol (32 : 6 : 1 : 1) as the mobile phase. Apply separately 10 μl of each of the test solution and the reference solution to the plate. After developing and removal of the plate, dry in air. Spray with 10% solution of phosphomolybdic acid in ethanol, heat at 110℃ for about 10 minutes. The spot in the chromatogram obtained with the test solution corresponds in position and colour to the spot in the chromatogram obtained with the reference solution.

Other requirements Comply with the general requirements for ointments (Appendix Ⅰ R).

Assay Carry out the method for gas chromatography (Appendix Ⅵ E).

Chromatographic system and system suitability Use 15% diethylene glycol succinate (DEGS) as the stationary phase, and maintain the column temperature at 105℃. Weigh 40 mg of a mixture of (±) bornel and (±) isoborneol CRS in a 10 ml volumetric flask, dissolve and dilute to volume with internal standard solution, and mix well as the system suitability test solution. Exactly inject 1μl of the solution into the column and measure. The number of theoretical plates of the column is not less than 2000, calculated with the reference to the peak of methyl salicylate. The resolution factor between peaks of (±) bornel, (±) isoborneol and the internal standard substance should comply with the related requirement.

Correction factor Weigh accurately a quantity of methyl salicylate CRS, dissolve in a mixture of cyclohexane and ethyl acetate (1 : 1) to produce a internal standard solution containing 3 mg per ml. Weigh accurately 20 mg of (±)-borneol CRS, place in a 10 ml volumetric flask, dissolve and dilute to volume with the internal standard solution, and shake well. Exactly inject 1 μl of the solution into the column, calculate the correction factor.

Procedure Weigh accurately 1 g of the ointments in a stopper conical flask, add accurately 10 ml of the internal standard solution, mix well and weigh, ultrasonicate for 15 minutes, cool, weigh again, and replenish the lost weight with a mixture of cyclohexane and ethyl acetate (1 : 1). Shake well, filter, and discard the initial filtrate. Inject accurately 1 μl of the solution into the column and calculate the content.

It contains not less than 19 mg of (±)-borneol ($C_{10}H_{18}O$) per gram, referred to Borneolum Syntheticum.

Action To clear *heat* and *dampness*, promote blood circulation to reduce swelling, and remove necrotic tissues and promote regeneration of tissues.

Indications Hemorrhoids and anal fissure due to retention of *damp-heat* with manifestations of hematochezia or pain, bearing-down feeling on bowels movement; also used for perianal eczema.

Usage and dosage For external use, spread on the affected part.

Precaution Be cautious about pregnant women or follow the doctor's order.

Storage Preserve in tightly closed containers.

Meihua Dianshe Wan
(梅花点舌丸)

Meihua Dianshe Pills

Ingredients Calculus Bovis 60 g; Margarita 90 g; Moschus 60 g; Venenum Bufonis (processed) 60 g; Pulvis Fel Ursi 30 g; Realgar 30 g; Cinnabaris 60 g; Borax 30 g; Semen Lepidii seu Descurainiae 30 g; Olibanum (processed) 30 g; Myrrha (processed) 30 g; Resina Draconis 30 g; Lignum Aquilariae Resinatum 30 g; Borneolum Syntheticum 30 g.

Procedure Pulverize or levigate Margarita to very fine powder; levigate Cinnabaris to very fine powder, and levigate Realgar to very fine powder; Pulverize Borax, Semen Lepidii, Olibanum, Myrrha, Resina Draconis and Lignum Aquilariae Resinatum to fine powder. Grind Moschus, Calculus Bovis, Venenum Bufonis, Pulvis Fel Ursi and Borneolum Syntheticum to fine powder, mix with the above powder (except Cinnabaris), sift. Make pills with water, dry at a lower temperature, coat with Cinnabaris powder and polish.

Description Red watered pills, with brownish-yellow to brown core; odour, aromatic; taste, bitter and numb.

Identification (1) Microscopical: Hypodermal cells of testa yellow, polygonal or long polygonal, walls slightly thickend. Walls of fibre tracheid slightly thickened, with bordered pits, pit apertures V-shaped or cross-shaped. Irregular fragments sanguine, the surrounding liquid turns from yellow to red gradually. Irregular fragments colourless or pale green, translucent, lustrous, some times fine dense sinuous striations visible. Amorphous masses pale yellowish-brown, embedded with fine prisms. Irregular fragments golden-yellow or orange-yellow, lustrous.

(2) Pulverize 3 g to fine power, and heat under reflux in 20 ml of methanol for 1 hours. Cool, filter, measure 10 ml of the filtrate, and evaporate to dryness. Dissolve the residue in 5 ml of 10% solution of sodium hydrate, heat at 120℃ for 2 hours, and cool. Add 10 ml of water, extract with two 20-ml quantities of ehtyl acetate, discard the solution of ethyl acetate, and acidify the water solution to pH 2-3 with hydrochloric acid . Extract with two 30-ml quantities of ether, combine the solution of ether, evaporate to dryness, and dissolve the residue in 1 ml of ethanol as the test solution. Dissolve cholic acid CRS, ursodeoxycholic acid CRS, and chenodeoxycholic acid CRS in ethanol to produce a mixture containing 1 mg of each per ml of each as the reference solution. Carry out the method for thin layer chromatography (Appendix Ⅵ B), using silica gel G as the coating substance and a mixture of isooctane-ethyl acetate-acetic acid (15 : 7 : 5) as the mobile phase. Apply separately 2 μl of each of the reference solution and the test solution to the plate. After developing and removing the plate, dry in air, Spray with the 10% solution of sulfuric acid in ethanol, heat at 105℃ for several minutes, and examine under ultraviolet light at 365 nm. The fluorescent spots in the chromatogram obtained with the test solution correspond in position and colour to the spots in the chromatogram obtained with the reference solution.

(3) Pulverize 3 g to fine power, add 10 ml of ether, well close, shake for 10 minutes and filter, and use the filtrate as the test solution Dissolve muscone CRS in ethanol to produce a reference solution containing 5 mg per ml. Carry out the method for thin layer chromatography (Appendix Ⅵ B), using silica gel G as the coating substance and a mixture of petroleum ether (60-90℃) and methylene chloride (2 : 3) as

the mobile phase. Apply separately to the plate 10 μl of the test solution and 2 μl of the reference solution. After developing and removing the plate, dry in air, and spray with dinitrophenylhydrazine TS. The spot in the chromatogram obtained with the test solution corresponds in position and colour to the spot in the chromatogram obtained with the reference solution.

(4) Pulverize 6 g to fine power, sublimation a small quantity of the powder, and dissolve the sublimates in 1 ml of dehydrated ethanol as the test solution. Weigh a quantity of a mixture of (±)-borneol and (±)-isoborneol CRS, dissolve in dehydrated ethanol to produce a reference solution containing 2 mg per ml. Carry out the method for thin layer chromatography (Appendix Ⅵ B), using silica gel G as the coating substance and a mixture of cyclohexane and ethyl acetate (17 : 3) as the mobile phase. Apply separately to the plate 3 μl of the test solution and 1 μl of the reference solution. After developing and removing the plate, dry in air. Spray with 1% vanillin in sulfuric acid, and heat at 105℃ to spots clear. The spot in the chromatogram obtained with the test solution corresponds in position and colour to the spot in the chromatogram obtained with the reference solution.

Other requirements Comply with the general requirements for pills (Appendix Ⅰ A).

Assay Carry out the method for high performance liquid chromatography (Appendix Ⅵ D).

Chromatographic system and system suitability Use octadecylsilane bonded silica gel as the stationary phase and a mixture of acetonitrile and water (65 : 35) as the mobile phase. As detector a spectrophotometer set at 296 nm. The number of theoretical plates of the column is not less than 1500, calculated with the reference to the peak of cinobufagin.

Reference solution Weigh accurately a quantity of cinobufagin CRS, dissolve in methanol to produce a reference solution containing 30 μg per ml.

Test solution Pulverize the pills obtained under the test of weight variation to fine powder, and weigh accurately 0.4 g to a 50 ml volumetric flask. Add 40 ml of methanol, ultrasonicate (power 250 W, frequency 50 kHz) for 30 minutes, cool, dilute to volume with methanol, shake well. Filter, and use the successive filtrate as the test solution.

Procedure Inject accurately 10 μl of each of the reference solution and the test solution into the column, respectively, and calculate the content.

It contains not less than 0.16 mg of cinobufagin per pill, referred to Venenum Bufonis.

Action To clear *heat* and *toxicity*, and reduce swelling and pain.

Indications Furuncles and carbuncles at the initial stage, swollen painful throat and gums, sores on the mouth and tongue due to abundant internal *toxic-fire*.

Usage and dosage 3 pills, 1-2 times a day; for external use, appropriate quantity to be dissolved in vinegar and applied topically.

Precaution Contraindicated for pregnant women

Strength 1 g per 10 pills

Storage Preserve in tightly closed containers.

Mengshi Guntan Wan
(礞石滚痰丸)

Mengshi Guntan Pills

Ingredients Lapis Micae Aureus (calcined) 40 g; Lignum Aquilariae Resinatum 20 g; Radix Scutellariae 320 g; Radix et Rhizoma Rhei (steamed) 320 g.

Procedure Pulverize the above four ingredients to fine powder, sift, mix well, make pills with water and dry.

Description Yellow to brown watered pills; taste, bitter.

Identification (1) Microscopical: Clusters of calcium oxalate large, 60-140 μm in diameter. Walls of fibre-tracheids slightly thickened, with bordered-pits, pit aperture V-shaped or cross-shaped. Bast fibres pale yellow, fusiform, walls thickened, with fine pit-canals. Subrectangular or irregular fragments pale yellowish-brown.

(2) Grind 0.5 g of the pills to fine powder, macerate in 20 ml of methanol for 1 hours, filter and evaporate the filtrate to dryness. Dissolve the residue in 10 ml of water, then add 1 ml of hydrochloride acid, heat under reflux for 30 minutes, allow to cool immediately, extract with two 20-ml quantities of ether. Combine the ether extracts, evaporate to dryness, dissolve the residue in 1 ml of chloroform as the test solution. Prepare a sloution of 0.1 g of Radix et Rhizoma Rhei reference drug in the same manner as the reference drug solution. Carry out the method for thin layer chromatography (Appendix Ⅵ B), using silica gel G as the coating substance, and the upper layer of petroleum ether (30-60℃), ethyl formate, and formic acid (15 : 5 : 1) as the mobile phase. Apply separately 10 μl each of the two solutions to the plate. After developing and removal of the plate, dry in air and examine under ultraviolet light at 365 nm. The orange fluorescent spots in the chromatogram obtained with the test solution correspond in position and colour to the spots in the chromatogram obtained with the reference drug solution. The spots turn red in daylight after exposing to ammonia vapour.

Other requirements Comply with the general requirements for pills (Appendix Ⅰ A).

Action To expel *phlegm* and *fire*.

Indications Mania and palpitation with fear due to *phlegm-fire* disturbing the mind, or coughing and asthma with expectoration of sticky sputum and constipation.

Usage and dosage 6-12 g, once a day.

Precaution Contraindicated for pregnant women.

Storage Preserve in well closed containers, protected from moisture.

Miaoji Wan
(妙济丸)

Miaoji Pills

Ingredients Auricularia auricula-judae (processed with vinegar) 300 g; Radix Angelicae Sinensis 32 g; Radix Paeoniae Alba (stir-baked with wine) 10 g; Rhizoma Chuanxiong 12 g; Fructus Chaenomelis 16 g; Cortex Eucommiae (stir-baked with salt) 20 g; Radix Dipsaci 32 g; Radix Cyathulae (steamed with wine) 32 g; Rhizoma Atractylodis 32 g; Fructus Foeniculi (stir-fried with salt) 8

g; Radix Aucklandiae 6 g; Flos Caryophylli 6 g; Fructus Eugeniae Caryophyllatae 6 g; Resina Olibani (processed) 8 g; Poria 50 g; Rhizoma Smilacis Glabrae 32 g; Carapax et Plastrum Testudinis (processed) 50 g.

Procedure Pulverize the above seventeen ingredients to fine powder, sift, mix well. To each 100 g of the powder add 200 g of refined honey and 16.6 g of butter (filtered after melting by heating) to make big honeyed pills.

Description Blackish-brown big honeyed pills; odour, characteristic; taste, slightly sweet, bitter and pungent.

Identification Microscopical: Irregularly branched masses colourless, dissolved in chloral hydrate TS; hyphae colourless or pale brown, 4-6 μm in diameter. Raphides of calcium oxalate 40-144 μm long, 5 μm in diameter. Needle crystals of calcium oxalate fine, 10-32 μm long, irregularly filling in parenchymatous cells. Clusters of calcium oxalate 18-32 μm in diameter, present in parenchymatous cells, often arranged in line or several clusters in one cell. Clusters of calcium oxalate fine, 7-11 μm in diameter, present in parenchymatous cells, often arranged in line. Sandy crystals of calcium oxalate present in parenchymatous cells. Rubber thread strip-shaped or twisted into masses, and granular on surface. Irregular masses greyish-yellow, with fine striations and holes on surface. Fragments of sporophores pale greyish-brown to dark brown, hyphae interlaced.

Other requirements Comply with the general requirements for pills (Appendix Ⅰ A).

Action To reinforce the liver and kidney, expel *dampness* and dredge meridians, and promote blood circulation to kill pain.

Indications Impediment disease due to deficiency in the liver and kidney and accumulation of *wind-damp* with manifestations of pain in the bones and joints, aching pain and weakness of the lower back and kness, and numbness and contracture of limbs.

Usage and dosage 1-2 pills, twice a day, taken with yellow rice wine.

Strength 6 g per pill

Storage Preserve in well closed containers.

Mingmu Dihuang Wan
(明目地黄丸)

Mingmu Dihuang Pills

Ingredients Radix Rehmanniae Praeparate 160 g; Fructus Corni (processed) 80 g; Cortex Moutan 60 g; Rhizoma Dioscoreae 80 g; Poria 60 g; Rhizoma Alismatis 60 g; Fructus Lycii 60 g; Flos Chrysanthemi 60 g; Radix Angelicae Sinensis 60 g; Radix Paeoniae Alba 60 g; Fructus Tribuli 60 g; Concha Haliotidis (calcined) 80 g.

Procedure Pulverize the above twelve ingredients to fine powder, sift and mix well. To each 100 g of powder add 35-50 g of refined honey and a quantity of water, make pills and dry. Alternatively, add 90-110 g of refined honey to make small honeyed pills or big honeyed pills.

Description Blackish-brown to black water-honeyed pills, black small honeyed pills or big honeyed pills; odour, slightly aromatic; taste, sweet, then bitter and astringent.

Identification (1) Microscopical: Starch granules triangular-ovoid or oblong, 24-40 μm in diameter, hila short-cleft or V shaped. Irregular branched masses colourless, dissolved in chloral hydrate TS; hyphae colourless or pale brown, 4-6 μm in diameter. Parenchyma greyish-brown to blackish-brown, cells mostly shrunken, and each containing a brown nucleus-like mass. Epidermal cells of pericarp orange-yellow, subpolygonal in surface view, with beaded anticlinal walls. Parenchymatous cells subrounded with elliptical pits gathered into pitted areas. Anticlinal walls of endodermal cells sinuous, relatively thickened, lignified, with sparse and fine pit-canals Stone cells of testa irregular polygonal in surface view, walls thickened and sinuous with well-defined striations. Pollen grains subrounded, 24-34 μm in diameter, extine spiny, 3-5 μm long, with 3 germinal pores. Fibres 15-35 μm in diameter, walls thickened and slightly lignified, with large rounded pits. Pericarp fibres lignified, with upper and lower layers in crisscross arrangment. Irregular masses dark grey, opaque, effervesces on adding acid.

(2) To 24 g of small honeyed pills or big honeyed pills, cut into pieces, or 18 g of water-honeyed pills, pulverized to powder; moisten with 10 ml of ether, and add 40 ml of petroleum ether (30-60℃), ultrasonicate for 15 minutes, allow to stand overnight, filter. Evaporate the filtrate to dryness, dissolve the residue in 2 ml of acetone as the test solution. Dissolve paeonol CRS in acetone to produce a solution containing 1 mg per ml as the reference solution. Carry out the method for thin layer chromatography (Appendix Ⅵ B), using silica gel G as the coating substance and a mixture of cyclohexane and ethyl acetate (3∶1) as the mobile phase. Apply separately 6 μl of the test solution and 4 μl of the reference solution to the plate. After developing and removal of the plate, dry in air, spray with 5% ferric chloride in ethanol acidified with hydrochloric acid. Heat at 105℃ for about 5 minutes. The spot in the chromatogram obtained with the test solution corresponds in position and colour to the spot in the chromatogram obtained with the reference solution.

(3) Grind well 6 g of the water-honeyed pills to pieces; or cut 9 g of the small honeyed pills or big honeyed pills into pieces, triturate well with 5 g of kieselguhr, dry in oven. Ultrasonicate with 30 ml of hexane for 15 minutes, filter and concentrate the filtrate to about 1 ml as the test solution. Prepare a solution of 1 g of Radix Angelicae Sinensis reference drug and 20 ml of hexane in the same manner as the reference drug solution. Carry out the method for thin layer chromatography (Appendix Ⅵ B), using silica gel G as the coating substance, and a mixture of *n*-hexane and ethyl acetate (9∶1) as the mobile phase. Apply separately 4 μl of each of the two solutions to the plate. After developing and removal of the plate, dry in air and examine under ultraviolet light at 365 nm. The fluorescent spots in the chromatogram obtained with the test solution correspond in position and colour to the fluorescent spots in the chromatogram obtained with the reference drug solution.

(4) Grind well 6 g of water-honeyed pills, or triturate 9 g of small honeyed pills or big honeyed pills, cut into pieces, with 4 g of kieselguhr. Ultrasonicate with 50 ml of ethanol for 20 minutes, filter, and evaporate the filtrate to dryness. Dissolve the residue in 20 ml of water and extract with three 20-ml quantities of *n*-butanol saturated with water by shaking. Combine the *n*-butanol solutions, evaporate to dryness, and dissolve the residue in 1 ml of ethanol as the test solution. Dissolve Paeoniflorin CRS in ethanol to produce a solution containing 1 mg per ml as the reference solution. Carry out the method for thin layer chromatography (Appendix Ⅵ B), using silica gel G as the coating substance and a mixture of chloroform, ethyl acetate, methanol and formic acid (40∶5∶10∶0.2) as the mobile phase. Apply separately to the plate 5 μl of each of the two solutions. After developing and removal of the plate, dry in air. Spray with a 5% solution of vanillin in sulfuric acid and heat at 105℃ to the spots clear. The spot in the chromatogram obtained with the test solution

corresponds in position and colour to the spot in the chromatogram obtained with the reference solution.

Other requirements Comply with the general requirements for pills (Appendix Ⅰ A).

Assay ***Fructus Corni*** Weigh accurately 18 g of small honeyed pills or big honeyed pills obtained under the test of weight variation, or 10 g of water-honeyed pills, cut into pieces and mixed well, add 50 ml of water, allow to stand for disintegration, filter, wash the residue with 80 ml of water and dry at room temperature to a loose powder, and heat at 100℃ to dryness. Place the residue along with the filter paper to a Soxhelt's extractor and heat under reflux with a quantity of ether for 4 hours. Recover the ether thoroughly and macerate the residue in two 20-ml quantities of petroleum ether (30-60℃) for about 2 minutes each. Decant the petroleum ether, dissolve the residue in a mixture of dehydrate ethanol and chloroform (3 : 2) by warming. Transfer accurately the solution to a 5 ml volumetric flask, dilute to volume with the same mixture solvent and shake well, used as the test solution. Dissolve a quantity of ursolic acid CRS in dehydrate ethanol to produce a reference solution containing 0.5 mg per ml. Carry out the method for thin layer chromatography (Appendix Ⅵ B), using silica gel G as the coating substance and a mixture of cyclohexane, chloroform, ethyl acetate and glacial acetic acid (20 : 5 : 8 : 0.5) as the mobile phase. Apply accurately 5 μl of test solution 2 μl and 5 μl of the reference solution to the plate, spotted alternatively. After developing and removal of the plate, dry in air. Spray with 10% sulfuric acid in ethanol, heat at 110℃ for 4-5 minutes to the spots distinct, and cool. Cover the plate with a same size glass and fix with tape. Carry out the method for thin layer chromatographic scanning (Appendix Ⅵ B), scan at the wavelength of $\lambda_S = 540$ nm, $\lambda_R = 700$ nm. Measure the integrated absorbance values of the test solution and reference solution, respectively, and calculate the content.

It contains not less than 90 μg per gram of the water-honeyed pills, 70 μg per gram of the small honeyed pills, 0.63 mg per big honeyed pill, of ursolic acid ($C_{30}H_{48}O_3$), referred to Fructus Corni.

Cortex Moutan Carry out the method for high performance liquid chromatography (Appendix Ⅵ D).

Chromatographic system and system suitability Use octadecylsilane bonded silica gel as the stationary phase and a mixture of methanol and water (70 : 30) as the mobile phase. As detector a spectrophotometer set at 274 nm. The number of theoretical plates of the column is not less than 3500, calculated with the reference to the peak of paeonol.

Reference solution Dissolve a quantity of paeonol CRS, accurately weighed, in methanol to prepare a solution containing 15 μg per ml as the reference solution.

Test solution Grind well the water-honeyed pills or small honeyed pills, or chip the big honeyed pills, obtained under the test of weight variation, into pieces, weigh accurately 0.5 g in a stoppered conical flask, add accurately 50 ml of 70% methanol, stopper well, and weigh. Ultrasonicate (power 250 W, frequency 33 kHz) for 45 minutes, cool, weigh again, replenish the loss of weight with 70% methanol, and shake well. Filter and use the successive filtrate as the test solution.

Procedure Inject accurately 10 μl of the reference solution and 20 μl of the test solution into the column, respectively, and calculate the content.

It contains not less than 0.50 mg per gram of the water-honeyed pills, 0.40 mg per gram of the small honeyed pills, 3.6 mg per big honeyed pill, of paeonol ($C_9H_{10}O_3$), referred to Cortex Moutan.

Radix Paeoniae Alba and Cortex Moutan Carry out the method for high performance liquid chromatography (Appendix Ⅵ D).

Chromatographic system and system suitability Use octadecylsilane bonded silica gel as the stationary phase and a mixture of acetonitrile and 0.1% phosphoric acid (14 : 86) as the mobile phase. As detector a spectrophotometer set at 230 nm. The number of theoretical plates of the column is not less than 4500, calculated with the reference to the peak of paeoniflorin.

Reference solution Dissolve a quantity of paeoniflorin CRS, accurately weighed, in methanol to produce a solution containing 50 μg per ml as the reference solution.

Test solution Measure accurately 25 ml the test solution obtained under the assay of Cortex Mudan, and evaporate to dryness. Dissolve the residue in 25 ml of water by warming, cool, extract with three 25-ml quantities of *n*-butanol saturated with water, combine the n-butanol extracts and evaporate to dryness. Dissolve the residue in methanol and transfer to a 5 ml volumetric flask, add methanol to volume, and shake well. Filter and use the successive filtrate as the test solution.

Procedure Inject accurately 10 μl of each of the reference solution and the test solution into the column, respectively, and calculate the content.

It contains not less than 0.80 mg per gram of the water-honeyed pills, 0.60 mg per gram of the small honeyed pills, 5.4 mg per big honeyed pill, of paeoniflorin ($C_{23}H_{28}O_{11}$), referred to Radix Paeoniae Alba and Cortex Moutan.

Action To nourish the kidney and liver, improve eyesight.

Indications Dryness of eyes, photophobia, blurred vision, and lacrimation irritated by the *wind* due to *yin* deficiency of the liver and the kidney.

Usage and dosage 6 g of water-honeyed pills, 9 g of small honeyed pills or 1 big honeyed pill, twice a day.

Strength 9 g per big honeyed pill

Storage Preserve in tightly closed containers.

Mugua Wan
(木瓜丸)
Mugua Pills

Ingredients Fructus Chaenomelis 80 g; Radix Angelicae Sinensis 80 g; Rhizoma Chuanxiong 80 g; Radix Angelicae Dahuricae 80 g; Radix Clematidis 80 g; Rhizoma Cibotii (processed) 40 g; Radix Achyranthis Bidentatae 160 g; Caulis Spatholobi 40 g; Caulis Piperis Kadsurae 80 g; Radix et Rhizoma Ginseng 40 g; Radix Aconiti Praeparata 40 g; Radix Aconiti Kusnezoffii Praeparata 40 g.

Procedure Pulverize Fructus Chaenomelis, Radix Clematidis, Caulis Spatholobi, Radix Achyranthis Bidentatae, Radix Aconiti Praeparata, Radix Aconiti Kusnezoffii Praeparata and Radix et Rhizoma Ginseng to fine powder, sift and mix well. Decoct the other five ingredients twice with water. Combine the decoctions and filter. Concentrate the filtrate, make pills with the above powder and dry. Coat with sugar and polish.

Description Sugar-coated concentrative watered pills, with yellowish-brown to blackish-brown core; taste, sour and bitter.

Identification (1) Microscopical: Sand crystals of calcium oxalate occurring in parenchymatous cells. Clusters of calcium oxalate 20-68 μm in diameter, with acute angles. Stone cells rectangular or subsquare, with slightly thickened walls. Stone cells rounded, oblong or subpolygonal, with thickened walls, and lumina containing orange-red or brown contents.
(2) Pulverize 5 g of the pills, removed the sugar coats, to fine powder, add 20 ml of ether, heat under reflux on a water bath for 30 minutes, cool, filter, evaporate the filtrate to dryness, dissolve the residue with 1 ml of ethyl acetate as the test solution. Prepare a solution of 0.5 g of Fructus Chaenomelis reference drug in the same manner as the reference drug solution. Carry out the method for thin layer chromatography (Appendix Ⅵ B), using silica gel G as the coating substance and a mixture of cyclohexane, acetone and ethly acetate (12 : 3 : 1) as the mobile phase. Apply separately to the plate 1-2 μl of the test solution and 1 μl of the reference drug solution. After developing and removal of the plate, dry in air, spray with a 10% solution of sulfuric acid in ethanol, and heat at 100℃ to the spot clear. The spots in the chromatogram obtained with the test solution correspond in position and colour to the spots in the chromatogram obtained with the reference drug solution, and then examine under ultraviolet light at 365 nm, the same spots, show the same colour of fluorescence.

Other requirements Comply with the general requirements for pills (Appendix Ⅰ A).

Action To expel *wind* and disperse *cold*, and eliminate *dampness* and dredge meridians.

Indications Impediment disease due to accumulation of *wind*, *cold* and *dampness* with manifestations of painful, swollen and immobilized joints, local aversion to *wind-cold*, numbness of limbs, and aching and weakness in the lower back and knees.

Usage and dosage 30 pills, twice a day.

Precaution Contraindicated for pregnant women.

Storage Preserve in tightly closed containers.

Muxiang Binglang Wan
(木香槟榔丸)

Muxiang Binglang Pills

Ingredients Radix Aucklandiae 50 g; Semen Arecae 50 g; Fructus Aurantii (stir-baked) 50 g; Pericarpium Citri Reticulatae 50 g; Pericarpium Citri Reticulatae Viride (processed with vinegar) 50 g; Rhizoma Cyperi (processed with vinegar) 150 g; Rhizoma Sparganii (processed with vinegar) 50 g; Rhizoma Curcumae (processed with vinegar) 50 g; Rhizoma Coptidis 50 g; Cortex Phellodendri Chinensis (stir-fried with wine) 150 g; Radix et Rhizoma Rhei 150 g; Semen Pharbitidis (stir-baked) 200 g; Natrii Sulfas 100 g.

Procedure Pulverize the above thirteen ingredients to fine powder, sift and mix well. Make pills with water and dry.

Description Greyish-brown watered pills; taste, bitter and slightly salty.

Identification (1) Microscopical: Wood fibres in bundles, long fus-iform, 16-24 μm in diameter, with slightly thickened walls and transverse cleft, crossed or V-shaped pit. Fibre bundles bright yellow, surrounded by cells containing prisms of calcium oxalate, forming crystal fibres, walls of crystal cells lignified and thickened. Fragments of endosperm cell colourless, with relatively thickened walls and numerous large subrounded pits. Prisms of calcium oxalate abundant in parenchyma. Clusters of calcium oxalate large, 60-140 μm in diameter. Secretory cells subrounded, containing yellowish-brown to reddish-brown secretion, surrounded by radially arranged cells. Palisade cells of testa pale brown or brown, 48-80 μm long.
(2) Macerate 0.8 g of the powder in 20 ml of methanol for 1 hour, filter and evaporate 5 ml of the filtrate to dryness. Dissolve the residue in 10 ml of water, add 1 ml of hydrochloric acid, heat on a water bath for 30 minutes, cool immediately and extract with two 20-ml quantities of ether. Combine the ether extracts and evaporate to dryness. Dissolve the residue in 1 ml of chloroform as the test solution. Prepare a solution of 0.1 g of Radix et Rhizoma Rhei reference drug in the same manner, as the reference drug solution. Carry out the method for thin layer chromatography (Appendix Ⅵ B), using silica gel H containing sodium carboxymethylcellulose as the coating substance and the upper layer of petroleum ether (30-60℃), ethyl formate, and formic acid (15 : 5 : 1) as the mobile phase. Apply separately to the plate 4 μl of each of the two solutions. After developing and removal of the plate, dry in air, and examine under ultraviolet light at 365 nm. The five orange fluorescent spots in the chromatogram obtained with the test solution correspond in position and colour to the spots in the chromatogram obtained with the reference drug solution. The spots turn red on exposing to ammonia vapour.
(3) Heat under reflux 1.2 g of the powder with 10 ml of methanol on a water bath for 15 minutes, filter and evaporate the filtrate to dryness. Dissolve the residue in 5 ml of methanol, as the test solution. Prepare a solution with 50 mg of Rhizoma Coptidis reference drug and 5 ml of methanol in the same manner as the reference drug solution. Dissolve berberine hydrochloride CRS in methanol to produce a solution containing 0.5 mg per ml as the reference solution. Carry out the method for thin layer chromatography (Appendix Ⅵ B), using silica gel G as the coating substance and a mixture of benzene, ethyl acetate, methanol, isopropanol, and concentrated ammonia TS (12 : 6 : 3 : 3 : 1) as the mobile phase. Apply separately to the plate 1 μl of each of the three solutions. After developing and removal of the plate, dry in air, and examine under ultraviolet light at 365 nm. The yellow fluorescent spot in the chromatogram obtained with the test solution correspond in position and colour to the spots in the chromatogram obtained with the reference drug solution and the reference solution.
(4) To 4 g of the powder, add 10 ml of water, then distil the volatile oils by steam. Collect about 100 ml of the distillate, carry out the method for spectrophotometry (Appendix Ⅴ A). The distillate exhibits a maximum absorbance at 253 nm.

Other requirements Comply with the general requirements for pills (Appendix Ⅰ A).

Action To promote *qi* flow to remove obstruction, and purge *heat* to relax bowels.

Indications Dysentery, tenesmus, distending pain in the abdomen, or constipation due to accumulation of *damp-heat*.

Usage and dosage 3-6 g, 2-3 times a day.

Precaution Contraindicated for pregnant women.

Storage Preserve in well closed containers, protected from moisture.

Muxiang Fenqi Wan
(木香分气丸)

Muxiang Fenqi Pills

Ingredients Radix Aucklandiae 192 g; Fructus Amomi 48 g; Flos Caryophylli 48 g; Lignum Santali Alba 48 g; Rhizoma Cyperi (stir-baked with vinegar) 384 g; Herba Pogostemonis 48 g; Pericarpium Citri Reticulatae 192 g; Cortex Magnoliae Officinalis (stir-baked with ginger juice) 384 g; Fructus Aurantii Immaturus 192 g; Semen Myristicae 48 g; Rhizoma Curcumae (stir-baked with vinegar) 384 g; Fructus Crataegi (stir-baked) 192 g; Rhizoma Atractylodis Macrocephalae (stir-baked with bran) 192 g; Radix et Rhizoma Nardostachyos 192 g; Semen Arecae 96 g; Radix et Rhizoma Glycirrhizae 192 g.

Procedure Pulverize the above 16 ingredients to fine powder, sift, mix well and make pills with water.

Description Yellowish-brown watered pills; odour, aromatic; taste, slightly pungent.

Identification (1) Microscopical: Stone cells branched, walls thickened, with distinct striations. Pericarp stone cells pale purplish-red, red or yellowish-brown, subrounded or polygonal, about 125 μm in diameter. Pieces of endosperm cell colourless, walls relatively thickened, with numerous large subrounded pits. Fibre bundles surrounded by parenchymatous cells containing prisms of calcium oxalate, forming crystal fibres.

(2) Pulverize 10 g to fine powder, add 20 ml of methanol, ultrasonicate for 5 minutes, filter, and use the filtrate as the test solution. Prepare a solution with 0.5 g of Radix Aucklandiae and 10 ml of methanol in the same manner as the reference drug solution. Carry out the method for thin layer chromatography (Appendix Ⅵ B), using silica gel G as the coating substance and a mixture of benzene and methanol (27 : 1) as the mobile phase. Apply separately to the plate 5 μl of each of the two solutions. After developing and removal of the plate, dry in air. Spray with 5% vanillin in sulfuric acid and heat to the spot clear. The spots in the chromatogram obtained with the test solution correspond in position and colour to the spots in the chromatogram obtained with the reference drug solution.

(3) Evaporate the test solution obtained in the test for Identification (2) to dryness, dissolve the residue in 20 ml of diluted hydrochloric acid, then extract with three 20-ml quantities of chloroform. Combine the chloroform extracts, extract with three 20-ml quantities of 2% solution of sodium hydroxide. Combine the sodium hydroxide extracts, adjust to pH 1-2 with dilute hydrochloric acid. Extract with three 20-ml quantities of chloroform. Combine the chloroform extracts, dehydrate the chloroform solution with anhydrous sodium sulphate, evaporate to dryness, and dissolve the residue in 1 ml of methanol as the test solution. Dissolve magnolol CRS and honokiol CRS in methanol to produce a mixture containing 1 mg of each per ml as the reference solution. Carry out the method for thinlayer chromatography (Appendix Ⅵ B), using silica gel G as the coating substance and a mixture of benzene and methanol (27 : 1) as the mobile phase. Apply separately to the plate 5 μl of each of the test solution and the reference solution. After developing and removal of the plate, dry in air. Spray with a 5% solution of vanillin in sulfuric acid and heat at 105℃ for several minutes. The spots in the chromatogram obtained with the test solution correspond in position and colour to the spots in the chromatogram obtained with the reference solution.

Other requirements Comply with the general requirements for pills (Appendix Ⅰ A).

Action To soothe the chest to eliminate fullness, and regulate flow of *qi* to stop vomiting.

Indications Epigastric stuffiness and oppression, distension of the hypochondria, epigastric pain, stomach distension, gastric upset, nausea and vomiting, belching and acid regurgitation.

Usage and dosage 6 g, twice, a day.

Precaution Be cautious about pregnant women.

Strength 6 g per 100 pills

Storage Preserve in tightly closed containers.

Naodesheng Pian
(脑得生片)

Naodesheng Tablets

Ingredients Radix et Rhizoma Notoginseng 78 g; Rhizoma Chuanxiong 78 g; Flos Carthami 91 g; Radix Puerariae Lobatae 261 g; Fructus Crataegi (removed from seeds) 157 g.

Procedure Pulverize Radix et Rhizoma Notoginseng and 130.5 g of Radix Puerariae Lobatae to fine powders respectively. Decoct the other three ingredients and the remained Radix Puerariae Lobatae with water twice, 1.5 hours for the first time, 1 hour for the second time, combine the decoctions, filter and concentrate the filtrate to a thin extract with a relative density of 1.22-1.25 (80℃). Add the above two powders, mix well, make granules, dry, make into 1000 tablets, and coat with sugar.

Description Sugar coated tablets with yellowish-brown core; taste, slightly bitter.

Identification (1) Microscopical: Fibers in bundles, surrounded by cells containing prisms of calcium exalate, forming crystal fibers, walls of crystal cells lignified and thickened. Fragments of resin canals containing yellow secretion.
(2) Take 2 tablets, removed sugar coats, pulverize, carry out the test of Identification (2) described in the monograph of Naodesheng Pills, the result should be the same.
(3) Take the test solution described under Assay as the test solution, carry out the test of Identification (3) described in the monograph of Naodesheng Pills, the result should be the same.

Other requirements Comply with the general requirements for tablets (Appendix Ⅰ D).

Assay Carry out the method for high performance liquid chromatography (Appendix Ⅵ D).

chromatographic system and system suitability Use octadecylsilane bonded silica gel as the stationary phase and acetonitrile as the mobile phase A, water as the mobile phase B, elute in gradient as the following. As detector a spectrophotometer set at 203 nm. The number of theoretical plates of the column is not less than 8000, calculated with the reference to the peak of ginsenoside Rg_1.

Time(min)	Mobile phase A (per cent V/V)	Mobile phase B (per cent V/V)
0-20	20→40	80→60
20-26	20	80

Reference solution Dissolve a quantity of each of ginsenoside Rb_1 CRS, ginsenoside Rg_1 CRS and notoginsenoside R_1 CRS, accurately weighed, in methanol to prepare a mixture containing 0.75 mg per ml for each of ginsenoside Rb_1 CRS and ginsenoside Rg_1 CRS, and 0.15 mg per ml for notoginsenoside R_1 CRS as the reference solution.

Test solution Take 20 tablets with sugar coating removed, weigh accurately, grind well, weigh accurately 1 g in a stopper conical flask, add accurately 50 ml of *n*-butanol saturated with water, stopper well, and weigh. Ultrasonicate (power 250 W, frequency 33 kHz) for 20 minutes, cool, weigh again, replenish the loss of weight with *n*-butanol saturated with water, shake well and filter. Measure accurately 25 ml of the successive filtrate in a separating funnel, and wash with ammonia TS for 2 times (15 ml, 10 ml). Evaporate the *n*-butanol solution to dryness, dissolve the residue in methanol, transfer to a 5 ml volumetric flask, add methanol to volume, and shake well. Filter and use the successive filtrate as the test solution.

Procedure Inject accurately 10 μl of each of the reference solution and the test solution into the column, respectively, and calculate the content.
It contains not less than 0.28 mg of notoginsenoside R_1 ($C_{47}H_{80}O_{18}$), 2.5 mg of the total amount of ginsenoside Rb_1 ($C_{54}H_{92}O_{23}$) and ginsenoside Rg_1 ($C_{42}H_{72}O_{14}$) per tablet, referred to Radix et Rhizoma Notoginseng.

Action To promote blood circulation to resolve stagnant blood, and dredge and activate meridians.

Indications Vertigo and stroke due to blockage of meridians by stagnated blood with manifestations of apraxia, dysphasia and dizziness; cerebral arteriosclerosis, ischemic stroke and sequelae of cerebral hemorrhage with above symptoms.

Usage and dosage 6 tablets, 3 times a day.

Storage Preserve in tightly closed containers.

Naodesheng Wan
(脑得生丸)

Naodesheng Pills

Ingredients Radix et Rhizoma Notoginseng 78 g; Rhizoma Chuanxiong 78 g; Flos Carthami 91 g; Radix Puerariae Lobatae 261 g; Fructus Crataegi (removed from seeds) 157 g.

Procedure Pulverize the above five ingredients to fine powder, sift and mix well. To each 100 g of the powder add 140-150 g of refined honey to make big honeyed pills.

Description Brown big honeyed pills; odour, slightly aromatic; taste, slightly sweet and sour.

Identification (1) Microscopical: Pollen grains rounded or elliptical, up to about 60 μm in diameter, with spinous extine and 3 germinal apertures. Fibres in bundles, surrounded by cells containing prisms of calcium oxalate, forming crystal fibres, walls of crystal cells lignified and thickened. Stone cells of pericarp pale purplish-red, red or yellowish-brown, subrounded or polygonal, up to 125 μm in diameter.
(2) Add 3 g of kieselguhr to 9 g of chopped sample, grind homogeneously, add 20 ml of a mixture of ethyl acetate-formic acid (9.5 : 0.5), heat under reflux on a water bath for 4 hours, filter, evaporate the filtrate to dryness, dissolve the residue in 2 ml of methanol, used as the test solution. Dissolve ferulic acid CRS in methanol to produce a solution containing 0.5 mg per ml as the reference solution. Carry out the method for thin layer chromatography (Appendix Ⅵ B), using silica gel G as the coating substance and a mixture of benzene, chloroform, glacial acetic acid (6 : 5 : 1) as the mobile phase. Apply separately 5-10 μl of the test solution and 2-4 μl of the reference solution to the plate. After developing and removal of the plate, dry in air, spray with fresh prepared a mixture of 1% solution of ferric chloride and 1% solution of potassium ferricyanide (1 : 1). The spot in the chromatogram obtained with the test solution corresponds in position and colour to the spot in the chromatogram obtained with the reference solution.
(3) Dissolve puerarin CRS in methanol to produce a solution containing 0.5 mg per ml, used as the reference solution. Carry out the method for thin layer chromatography (Appendix Ⅵ B), using silica gel G as the coating substance and the lower layer of a mixture of chloroform, ethyl acetate,

methanol, and water (15 : 40 : 22 : 10) stored below 10℃ for 12 hours as the mobile phase. Apply separately 5-10 μl of the test solution described in Assay and 2-4 μl of the reference solution to the plate. After developing and removal of the plate, dry in air, examine under ultraviolet light at 365 nm, the fluorescent spot in the chromatogram obtained with the test solution corresponds in position and colour to the spot in the chromatogram obtained with the reference solution.

Acid-insoluble ash Not more than 1.0 per cent (Appendix Ⅸ K).

Other requirements Comply with the general requirements for pills (Appendix Ⅰ A).

Assay Mix 2 g, in pieces, weighed accurately, with 2 g of kieselguhr and grind homogeneously, take it to Soxhlet's extractor and add an appropriate quantity of ether, heat under reflux on a water bath for 2 hours, discard the ether extract, after removing the ether in the filter paper cartridge case, put it in the Soxhlet's extractor again, add an appropriate quantity of methanol, allow to stand overnight, heat under reflux on a water bath until the solution colourless, remove the methanol and evaporate to dryness. Dissolve the residue in 30 ml of water, transfer it to a separating funnel, extract by shaking with *n*-butanol saturated with water for 5 times (25, 20, 20, 10, 10 ml), wash the combined extract with three 25-ml quantities of water saturated with *n*-butanol, discard the washings, evaporate the *n*-butanolic solution in vacuum to dryness, dissolve the residue in methanol and transfer to a 5 ml volumetric flask, dilute to volume, shake well, used as the test solution. Dissolve ginsenoside Rg_1 CRS in methanol to produce a solution containing 0.5 mg per ml as the reference solution. Carry out the method for thin layer chromatography (Appendix Ⅵ B), using high performance silica gel as the coating substance and the lower layer of a mixture of chloroform, ethyl acetate, methanol, and water (15 : 40 : 22 : 10) stored below 5-10℃ for 12 hours as the mobile phase. Apply accurately 2-4 μl of the test solution, 2 μl and 4 μl of the reference solution to the plate alternatively. After developing and removal of the plate, dry in air. Spray with 10% sulfuric acid in ethanol, heat at 110℃ until the colour of the spot distinct, cover the plate with a same size glass, fix the edge with tape. Carry out the method for thin layer chromatography (thin layer chromatographic scanning method, Appendix Ⅵ B), scan at the wavelength of $\lambda_s = 525$ nm and $\lambda_R = 700$ nm, measure the integration value of the absorbance of the test solution and the reference solution respectively, calculate the content.
It contains not less than 6.0 mg of ginsenoside Rg_1 ($C_{42}H_{72}O_{14}$) per pill, referred to Radix et Rhizoma Notoginseng.

Action To promote blood circulation to resolve stagnated blood, and dredge and activate meridians.

Indications Vertigo and stroke due to blockage of meridians by stagnated blood with manifestations of apraxia, dysphasia and dizziness; cerebral arteriosclerosis, ischemic stroke and sequelae of cerebral hemorrhage with above symptoms.

Usage and dosage 9 g, 3 times a day.

Strength 9 g per pill

Storage Preserve in tightly closed containers.

Naolejing
(脑乐静)

Naolejing Syrup

Ingredients Extractum Glycyrrhizae 35.4 g; Fructus Jujubae 125 g; Fructus Tritici 416 g.

Procedure To Extractum Glycyrrhizae add a quantity of water, heat to dissolve, filter, concentrate the filtrate to an appropriate volume. Decoct Fructus Jujubae with water twice, each for 2 hours, combine the decoctions, filter, concentrate the filtrate to a thin extract with a relative density of 1.10 (80℃), allow to cool, add an equal quantity of ethanol, stir well, allow to stand for 24 hours. Boil Fructus Tritici with water for 10 minutes, macerate at a temperature of 70-80℃ twice, each for 2 hours, combine the macerates and filter, concentrate the filtrate to a thin extract with a relative density of 1.10 (80℃), add an equal quantity of ethanol, stir well, allow to stand for 24 hours. Combine the supernatants of the above Fructus Jujubae and Fructus Tritici liquids, filter, recover ethanol, and concentrate to a thin extract with a relative density of 1.05-1.10 (80℃), add 750 g of sucrose, the above concentrated solution of Extractum Glycyrrhizae and a quantity of sodium benzoate, boil to dissolve, filter, add water and make to 1000 ml, stir well.

Description A plae brown glutinous liquid; odour, slight; taste, sweet.

Identification (1) Measure 5 ml of the syrup, add 15 ml of water, mix well. Extract with three 20-ml quantities of *n*-butanol saturated with water. Combine the *n*-butanol extracts, wash with three 10-ml quantities of water. Evaporate the *n*-butanol solution to dryness, dissolve the residue in 1 ml of methanol as the test solution. Heat under reflux 0.2 g of Radix et Rhizoma Glycyrrhizae reference drug in 20 ml of water for 1 hour, filter and treat the filtrate in the same manner as the reference drug solution. Dissolve ammonium glycyrrhizinate CRS in methanol to produce a solution containing 0.5 mg per ml as the reference solution. Carry out the method for thin layer chromatography (Appendix Ⅵ B), using silica gel G as the coating substance mixed with 1% solution of sodium hydroxide and a mixture of ethyl acetate, formic acid, glacial acetic acid, and water (15 : 1 : 1 : 2) as the mobile phase. Apply separately 5 μl of each of the three solutions to the plate. After developing and removal of the plate, dry in air, spray with 10% sulfuric acid in ethanol, heat at 105℃ to the spots clear. Examine under ultraviolet light at 365 nm, the fluorescent spots in the chromatogram obtained with the test solution correspond in position and colour to the spots in the chromatogram obtained with the reference drug solution; the orange fluorescent spot in the chromatogram obtained with the test solution corresponds in position and colour to the spot in the chromatogram obtained with the reference solution.
(2) Measure 20 ml of the syrup, extract with 50 ml of ether, and concentrate the extract to 1 ml as the test solution. Decoct 1 g of Fructus Jujubae reference drug with 100 ml of water for 1 hour. Filter, evaporate to 20 ml, and extract with 50 ml of ether, and concentrate the extract to 1 ml as the reference drug solution. Carry out the method for thin layer chromatography (Appendix Ⅵ B), using silica gel GF_{254} as the coating substance and ethyl acetate as the mobile phase. Apply separately 5 μl of each of the reference drug solution and the test solution to the plate. After developing and removing the plate, dry in air. Heat at 105℃ to spots

clear, and examine under ultraviolet light at 254 nm. The fluorescent spots in the chromatogram obtained with the test solution correspond in position and colour to the fluorescent spots in the chromatogram obtained with the reference drug solution.

Relative density Not less than 1.27 (Appendix Ⅶ A).

Other requirements Comply with the general requirements for syrups (Appendix Ⅰ H).

Assay Carry out the method for high performance liquid chromatography (Appendix Ⅵ D).

Chromatographic system and system suitability Use octadecylsilane bonded silica gel as the stationary phase and a mixture of acetonitrile and 2.5% solution of acetic acid (35 : 65) as the mobile phase. As detector a spectrophotometer set at 254 nm. The number of theoretical plates of the column is not less than 2000, calculated with the reference to the peak of glycyrrhizinic acid.

Reference solution Weigh accurately a quantity of ammonium glycyrrhizinate CRS, and dissolve in dilute ethanol TS to produce a solution containing 40 μg per ml as reference solution (correspond to 39 μg of glycyrrhizinic acid per ml).

Test solution Measure 10 ml of the syrup, accurately weighed, in a 50 ml volumetric flask, dilute to volume with dilute ethanol TS, shake well, and filter. Discard the initial filtrate, measure accurately 1 ml of the filtrate, in a 10 ml volumetric flask, dilute to volume with dilute ethanol TS, shake well and filter, and use the filtrate as the test solution.

Procedure Inject accurately 10 μl of each of the reference solution and the test solution into the column, respectively, and calculate the content.
It contains not less than 1.0 mg of glycyrrhizic acid ($C_{42}H_{62}O_{16}$) per gram, referred to Extractum Glycyrrhizae.

Action To nourish the heart to anchor the mind.

Indication Depression, hyperarousal, insomnia and restless due to malnourishment of the heart.

Usage and dosage 30 ml, 3 times a day; appropriate reduction of the dosage for children.

Storage Preserve in tightly closed containers.

Naoliqing Wan
(脑立清丸)

Naoliqing Pills

Ingredients Magnetitum 200 g; Haematitum 350 g; Concha Margaritifera 100 g; Rhizoma Pinelliae (processed with alum) 200 g; Saccharomyces Cerevisiae Fermentata 200 g; Saccharomyces Cerevisiae Fermentata (stir-baked) 200 g, Radix Achyranthis Bidentatae 200 g; Mentholum 50 g; Borneolum Syntheticum 50 g; Fel Suillus Liquidum 350 g (or Pulvis Fellis Suis 50 g).

Procedure Pulverize Magnetitum, Haematitum, Concha Margaritifera, Rhizoma Pinelliae (processed with alum), Radix Achyranthis Bidentatae, Saccharomyces Cerevisiae Fermentata and Saccharomyces Cerevisiae Fermentata (stir-baked) to fine powders respectively, sift, take out 100 g of Haematitum powder for coating. Grind Mentholum and Borneolum Syntheticum to fine powder, triturate with the above powders, sift. Boil Fel Suillus Liquidum with a quantity of water, filter, use the bile solution to make pills; or grind Mentholum and Borneolum Syntheticum to fine powder, triturate with the above powders and Pulvis Fel suillus well, sift and make pills with water. Coat with the remained Haematitum powder, dry at 40℃.

Description Dark brown watered pills; odour, aromatic; taste, slightly bitter.

Identification (1) Place 0.6 g, finely powdered, in a stopper centrifugal tube, add 4 ml of 6 mol/L of solution of hydrochloric acid, shake, and centrifuge for 5 minutes at 3000 round per minute. To 2 drops of the supernatant, add 2 drops of ammonium thiocyanate TS, the solution turns to blood red; to 0.5 ml of the supernatant, add 1-2 drops of potassium ferrocyanide TS, a blue precipitate is produced; add 0.5-1 ml of 25% solution of sodium hydroxide, the precipitate turns to brown.
(2) Pulverize 3 g to fine powder, heat under reflux in 20 ml of ethanol for 40 minutes, and filter. To 10 ml of the filtrate, add 1 ml of hydrochloric acid, and heat under reflux on a water bath for 1 hour. Concentrate the extract to about 5 ml, add 10 ml of water, and extract with two 20-ml quantities of petroleum ether (60-90℃). Combine the petroleum ether extracts, evaporate to dryness, and dissolve the residue in 1 ml of ethanol as the test solution. Dissolve a quantity of oleanolic acid CRS in ethanol to produce a reference solution containing 1 mg per ml. Carry out the method for thin layer chromatography (Appendix Ⅵ B), using silica gel G as the coating substance and a mixture of chloroform and methanol (40 : 1) as the mobile phase. Apply separately 5 μl of each of the reference solution and the test solution to the plate. After developing and removing the plate, dry in air. Spray with 10% sulfuric acid in ethanol, heat at 105℃ to the spots clear. The spot in the chromatogram obtained with the test solution corresponds in position and colour to the spot in the chromatogram obtained with the reference solution.
(3) Pulverize 1 g to fine powder, add 10 ml of 10% solution of sodium hydroxide, and heat at 120℃ for 4 hours. Cool, add 20 ml of water and filter, adjust the filtrate to pH 2-3 with hydrochloric acid, shake, and extract with with three 20-ml quantities of ethyl acetate. Combine the ethyl acetate solution, evaporate to dryness, dissolve the residue in 2 ml of ethanol as the test solution. Dissolve Hyodeoxycholic acid CRS in ethanol to produce a reference solution containing 1 mg per ml. Carry out the method for thin layer chromatography (Appendix Ⅵ B), using silica gel G as the coating substance and the upper layer of a mixture of isooctane, ether, *n*-butanol, acetic acid and water (10 : 5 : 3 : 5 : 1) as the mobile phase. Apply separately 2 μl of each of the reference solution and the test solution to the plate. After developing and removing the plate, dry in air. Spray with 10% sulfuric acid in ethanol, and heat at 105℃ to the spots clear. The spot in the chromatogram obtained with the test solution corresponds in position and colour to the spot in the chromatogram obtained with the reference solution.

Other requirements Comply with the general requirements for pills (Appendix Ⅰ A).

Assay Carry out the method for gas chromatography (Appendix Ⅵ E).

Chromatographic system and system suitability Use 10% polyethylene glycol (PEG)-20 M as the stationary phase, maintain the column temperature at 120℃. The number of theoretical plates of the column is not less than 1900, calculated with the reference to the peak of (±)-borneol. The resolution of the (±)-borneol peak with the internal standard peak must be larger than 2.

Correction factor Weigh accurately a quantity of methylsalicylate, and dissolve in ethanol to produce a internal standard solution containing 0.13 mg per ml. Weigh

accurately 8 mg of (±) -borneol CRS, place in a 100 ml volumetric flask, dissolve and dilute to volume with the internal standard solution, and shake well. Inject 2 μl of the solution into the column, calculate the correction factor.

Procedure Pulverize 30 pills to fine powder, weigh accurately 1 g of the powder in a stopper conical flask, add accurately 25 ml of the internal standard solution, well close. Ultrasonicate (power, 250 W; frequence, 50 kHz) for 30 minutes, cool, Shake well, filter, and discard the initial filtrate. Inject 2 μl of the solution into the column, and calculate the content.
It contains not less than 0.22 mg of (±)-borneol ($C_{10}H_{18}O$) per pill, referred to Borneolum Syntheticum.

Action To pacify the liver to restrain hyperactivity of *yang*, and induce resuscitation and anchor the mind.

Indications Dizziness, tinnitus, bitter taste in the mouth, restlessness and insomnia due to hyperactivity of *liver-yang*; hypertension with above symptoms.

Usage and dosage 10 pills, twice a day.

Precaution Contraindicated for pregnant women and debilitated persons in a *deficiency-cold* condition.

Strength 1.1 g per 10 pills

Storage Perserve in tightly closed containers.

Niuhuang Baolong Wan
(牛黄抱龙丸)

Niuhuang Baolong Pills

Ingredients Calculus Bovis Artifactus 8 g; Arisaema cum Bile 200 g; Concretio Silicea Bambusae 70 g; Poria 100 g; Succinum 50 g; Moschus 4 g; Scorpio 30 g; Bombyx Batryticatus (stir-baked) 60 g; Realgar 50 g; Cinnabaris 30 g.

Procedure Levigate Cinnabaris and Realgar to very fine powder. Pulverize Arisaema cum Bile, Concretio Silicea Bambusae, Poria, Succinum, Scorpio and Bombyx Batryticatus to fine powder. Triturate Moschus and Calculus Bovis Artifactus with the above powder, sift and mix well. To each 100 g of powder add 90-100 g of refined honey to make big ho neyed pills.

Description Yellowish-brown to reddish-brown big honeyed pills; odour, slightly aromatic; taste, slightly bitter.

Identification Microscopical: Irregular branched masses colourless, dissolved in chloral hydrate TS; hyphae colourless or pale brown, 4-6 μm in diameter. Fragments of body walls pale yellow to yellow, with reticulate striations and rounded alveoli, sometimes showing brown seta. Fragments of body walls colourless, with minute hyphae on the surface. Irregular pieces pale yellowish-green or brownish-yellow, transparent or translucent. Irregular pieces golden-yellow or orange-yellow, lustrous. Irregular minute granules dark brownish-red, lustrous, with dark black edge.

Other requirements Comply with the general requirements for pills (Appendix Ⅰ A).

Action To clear *heat* and relieve convulsion, and expel *wind* and resolve *phlegm*.

Indications Child convulsion due to excessive *wind-phlegm* with manifestations of high fever, coma and convulsion.

Usage and dosage 1 pill, 1-2 times a day; appropriate reduction of the dosage for children under one year of age.

Strength 1.5 g per pill

Storage Preserve in tightly closed containers.

Niuhuang Jiangya Jiaonang
(牛黄降压胶囊)

Niuhuang jiangya Capsules

Ingredients Cornu Saigae Tataricae; Margarita; Pulvis Cornus Bubali Concentratus; Calculus Bovis Artifactus; Borneolum Syntheticum; Radix Paeoniae Alba; Radix Codonopsis; Radix Astragali; Semen Cassiae; Rhizoma Chuanxiong; Extractum Scutellariae Siccus; Radix et Rhizoma Nardostachyos; Herb Menthae; Radix Curcumae.

Procedure Levigate or Pulverize Margarita and Cornu Saigae Tataricae separately to very fine powder, Pulverize the other nine ingredients into fine powder except Calculus Bovis Artifactus, Borneolum Syntheticum, Pulvis Cornus Bubali Concentratus. Grind Calculus Bovis Artifactus, Borneolum Syntheticum, and Pulvis Cornus Bubali Concentratus to fine powder, and mix well with above powders, sift, mix thoroughly, pack into capsules.

Description Capsules containing grayish-yellow powder; odour, slightly aromatic; taste, slightly sweet and bitter, with cool sensation.

Identification (1) To 1 g of the content, add 30 ml of chloroform, ultrasonicate for 30 minutes, filter, and use the filtrate as the test solution. Dissolve a mixture of (±) borneol and (±) isoborneol CRS in chloroform to produce a solution containing 0.2 mg per ml as the reference solution. Carry out the method for thin layer chromatography (Appendix Ⅵ B), using silica gel G as the coating substance and a mixture of cyclohexane and ethyl acetate (9 : 1) as the mobile phase. Apply separately 2 μl of each of the above two solutions to the plate. After developing and removal of the plate, dry in air, spray with 5% phosphomolybdic acid in ethanol, and heat at 105℃ to the spots clear. The spots in the chromatogram obtained with the test solution correspond in position and colour to the spots in the chromatogram obtained with the reference solution.
(2) To 1 g of the content, add 30 ml of methanol, ultrasonicate for 30 minutes, filter, and concentrate the filtrate to 2 ml as the test solution. Dissolve cholic acid CRS in methanol to produce a solution containing 1 mg per ml as the reference solution. Carry out the method for thin layer chromatography (Appendix Ⅵ B), using silica gel G as the coating substance and a mixture of isooctane, butyl ether, and glacial acetic acid (8 : 5 : 5) as the mobile phase. Apply separately 6 μl of the test solution and 2 μl of the reference solution to the plate. After developing and removal of the plate, dry in air. Spray with 10% phosphomolybdic acid in ethanol, and heat at 105℃ to the spots clear. The spot in the chromatogram obtained with the test solution corresponds in position and colour to the spot in the chromatogram obtained with the reference solution.
(3) To 5 g of the content, add 30 ml of ether, ultrasonicate for 15 minutes. Add a quality of carbon active, stir thoroughly to make the solution almost colourless and filter. Evaporate the filtrate to dryness, and dissolve the residue in 0.5 ml of ethyl acetate as the test solution. To 1 g of Rhizoma Chuanxiong reference drug, add 20 ml of ether, ultrasonicate for 15 minutes, and filter. Evaporate the filtrate to dryness, and dissolve the residue in 1 ml of ethyl acetate as the reference drug solution. Carry out the method for thin layer chromatography (Appendix Ⅵ B), using silica gel G as the coating substance and a mixture of cyclohexane

and ethyl acetate (9 : 1) as the mobile phase. Apply separately to the plate 6-10 μl of the test solution and 2 μl of the reference drug solution. After developing and removal of the plate, dry in air, and examine under ultraviolet light at 365 nm. The fluorescent spots in the chromatogram obtained with the test solution correspond in position and colour to the spots in the chromatogram obtained with the reference drug solution.

(4) To 5 g of the content, add 50 ml of water, heat under reflux for 20 minutes, and cool. Centrifuge for few minutes, and extract the supernatant with two 20-ml quantities of ethyl acetate. Discard the ethyl acetate extracts, and extract the water solution with three 20-ml quantities of *n*-butanol saturated with water, combine the *n*-butanolic extracts, wash with two 20-ml quantities of ammonia TS, discard the ammonia solutions, evaporate the butanol solution to dryness, dissolve the residue in 1 ml of methanol as the test solution. Dissolve Astragaloside IV CRS in ethanol to produce a solution containing 0.5 mg per ml as the reference solution. Carry out the method for thin layer chromatography (Appendix Ⅵ B), using silica gel G as the coating substance and the lower layer of a mixture of chloroform, methanol, and water (13 : 6 : 2) (keep under 10℃ overnight) as the mobile phase. Apply separately to the plate 6-10 μl of the test solution and 2 μl of the reference solution. After developing and removal of the plate, dry in air, spray with 10% sulfuric acid in ethanol, and heat at 105℃ to visualize clearly. The spot in the chromatogram obtained with the test solution corresponds in position and colour to the spot in the chromatogram obtained with the reference solution.

Other requirements Comply with the general requirements for capsules (Appendix Ⅰ L).

Assay ***Radix Paeoniae Alba*** Carry out the method for high performance liquid chromatography (Appendix Ⅵ D).

Chromatographic system and system suitability Use octadecylsilane bonded silica gel as the stationary phase, and a mixture of acetonitrile and water (15 : 85) as the mobile phase. As detector a spectrophotometer set at 230 nm. The number of theoretical plates of the column is not less than 3000, calculated with the reference to the peak of paeoniflorin.

Reference solution Weigh accurately a quantity of paeoniflorin CRS, dissolve with dilute ethanol TS, to produce a solution containing 0.1 mg per ml.

Test solution Weigh accurately 1 g of the content obtained under the test of weight variation, pulverize to fine powder, place in a stopper conical flask, add accurately 50 ml of water, closely stopper and weigh. Ultrasonicate for 45 minutes (power, 250 W; frequency, 33 kHz), cool, weigh again, replenish the loss weight with water, stir well and centrifuge (3000 rpm). Apply 10 ml of the supernatant to a packed with polyamide column 15 mm in internal diameter (3 g) and elute with water, collect 60 ml of the elute. Evaporate the eluate on a water bath to dryness, dissolve the residue in dilute ethanol TS, transfer to a 10 ml volumetric flask and add dilute ethanol TS to volume, mix well and filter, use the successive filtrate as the test solution.

Procedure Inject accurately 5 μl of each of the reference solution and the test solution into the column respectively and measure.

It contains not less than 0.60 mg of paeoniflorin ($C_{23}H_{28}O_{11}$) per capsule, referred to Radix Paeoniae Alba.

Extractum scutellariae siccus Carry out the method for high performance liquid chromatography (Appendix Ⅵ D).

Chromatographic system and system suitability Use octadecylsilane bonded silica gel as the stationary phase, and a mixture of methanol, water, and glacial acetic acid (50 : 50 : 1) as the mobile phase. As detector a spectrophotometer set at 280 nm. The number of theoretical plates of the column is not less than 4000, calculated with the reference to the peak of baicalin.

Reference solution Weigh accurately a quantity of baicalin CRS, dissolve in dilute ethanol, to produce a solution containing 60 μg per ml.

Test solution Weigh accurately 0.5 g of the content obtained under the test of weight variation, pulverized to fine powder, in a stopper conical flask. Add accurately 50 ml of dilute ethanol TS, weigh. Heat under reflux for 30 minutes, cool, weigh again, replenish the loss weight with dilute ethanol TS, and stir well. Transfer accurately 5 ml of the solution to a 100 ml volumetric flask and add dilute ethanol to volume, mix well and filter, and use the successive filtrate as the test solution.

Procedure Inject accurately 10 μl of each of the reference solution and the test solution into the column respectively and measure.

It contains not less than 38 mg of baicalin ($C_{21}H_{18}O_{11}$) per capsule, referred to Extractum Scutellariae siccus.

Action To clear the heart and resolve *phlegm*, and pacify the liver and anchor the mind.

Indications Dizziness, headache, insomnia and restlessness due to hyperactivity of *heart-fire* and *liver-fire* and excessive *phlegm-heat*; hypertension with above symptoms.

Usage and dosage 2-4 capsules, once a day.

Precaution Contraindicated for diarrhea patients.

Strength 0.4 g per capsule

Storage Preserve in tightly closed containers.

Niuhuang Jiangya Wan (牛黄降压丸)

Niuhuang Jiangya Pills

Ingredients Cornu Saigae Tataricae; Margarita; Pulvis Cornus Bubali Concentratus; Calculus Bovis Artifactus; Borneolum Syntheticum; Radix Paeoniae Alba; Radix Codonopsis; Radix Astragali; Semen Cassiae; Rhizoma Chuanxiong; Extractum Scutellariae Siccus; Radix et Rhizoma Nardostachyos; Herba Menthae; Radix Curcumae.

Procedure Levigate or pulverize Margarita to very fine powder, file Cornu Saigae Tataricae to fine powder, pulverize Radix Paeoniae Alba, Radix Codonopsis, Radix Astragali, Semen Cassiae; Rhizoma Chuanxiong, Extractum Scutellariae Siccus, Radix et Rhizoma Nardostachyos, Herba Menthae and Radix Curcumae to fine powder. Grind well Calculus Bovis Artifactus, Borneolum Syntheticum, Pulvis Cornus Bubali Concentratus, and triturate with the above powders, sift and mix well. To each 100 g of the powder add 65-75 g of refined honey to make small honeyed pills, or add 100-120 g of refined honey to make big honeyed pills.

Description Yellowish-brown big honeyed pills or small honeyed pills; odour, slightly aromatic; taste, slightly sweet, bitter, and cool.

Identification (1) Triturate well 2 g, in pieces, with 2 g of kieselguhr, add 30 ml of chloroform, ultrasonicate for 30 minutes and filter. Use 2 ml of the filtrate as the test solution. Dissolve a mixture of (±) borneol and (±)

isobornel CRS in chloroform to produce a solution containing 0.2 mg per ml as the reference solution. Carry out the method for thin layer chromatography (Appendix Ⅵ B), using silica gel G as the coating substance and a mixture of cyclohexane and ethyl acetate (17 : 1) as the mobile phase. Apply separately to the plate 1-2 μl of each of the two solutions. After developing and removal of the plate, dry in air, spray with 5% phosphomolybdic acid in ethanol and heat at 105 ℃ to the spots clear. The blue spots in the chromatogram obtained with the test solution correspond in position and colour to the spots in the chromatogram obtained with the reference solution.

(2) Triturate well 2 g of the pills, in pieces, with 2 g of kiselguhr, ultrasonicate it in 30 ml of chloroform for 30 mintues and filter. Evaporate the filtrate to about 2 ml as the test solution. Dissolve cholic acid CRS in methanol to produce a reference solution containing 1 mg per ml. Carry out the method for thin layer chromatography (Appendix Ⅵ B), using silica gel G as the coating substance, and a mixture of isooctane, ethyl acetate, and glacial acetic acid (8 : 5 : 5) as the mobile phase. Apply separately 6 μl of the test solution and 2 μl of the reference solution to the plate. After developing and removal of the plate, dry in air, spray with 10% phosphomolybdic acid in ethanol, heat at 105℃ to the spots clear minutes. The spot in the chromatogram obtained with the test solution corresponds in position and colour to the spot in the chromatogram obtained with the reference solution.

(3) Triturate well 5 g of the pills, in pieces, with 2 g of kieselguhr, add 30 ml of ether, ultrasonicate for 15 minutes, and filter. Evaporate the filtrate to dryness, and dissolve the residue in 1 ml of ethyl acetate as the test solution. Prepare a solution of 1 g of Rhizoma Chuanxiong reference drug and 20 ml of ether in the same manner as the reference drug solution. Carry out the method for thin layer chromatography (Appendix Ⅵ B), using silica gel G as the coating substance and a mixture of cyclohexane and ethyl acetate (9 : 1) as the mobile phase. Apply separately to the plate 6-10 μl of the test solution and 2 μl of the reference drug solution. After developing and removing the plate, dry in air. Examine under ultraviolet light at 365 nm. The fluorescent spots in the chromatogram obtained with the test solution correspond in position and colour to the spots in the chromatogram obtained with the reference drug solution.

(4) Triturate well 5 g of the pills, in pieces, with 2 g of kieselguhr, add 50 ml of water, and heat under reflux for 20 minutes. Cool, centrifuge, and separate the supernatant. Extract the supernatant with three 20-ml quantities of *n*-butanol saturated with water, combine the *n*-butanol extract, and extract with two 20-ml quantities of ammonia TS. Discard the solution of ammonia, and evaporate the solution of *n*-butanol to dryness. Dissolve the residue in 1 ml of methanol, and use the supernatant as the test solution. Dissolve astragaloside Ⅳ CRS in methanol to produce a reference solution containing 0.5 mg per ml. Carry out the method for thin layer chromatography (Appendix Ⅵ B), using silica gel G as the coating substance and the lower layer of a mixture of chloroform, methanol, and water (13 : 6 : 2) standing below 10℃ over night as the mobile phase. Apply separately 6-10 μl of the test solution and 2 μl of the reference solution to the plate. After developing and removing the plate, dry in the air. Spray with the 10% sulfuric acid in ethanol, heat at 105℃ to the spots clear. The spot in the chromatogram obtained with the test solution corresponds in position and colour to the spot in the chromatogram obtained with the reference solution.

Other requirements Comply with the general requirements for pills (Appendix Ⅰ A).

Assay ***Radix Paeoniae Alba*** Carry out the method for high performance liquid chromatography (Appendix Ⅵ D).

Chromatographic system and system suitability Use octadecylsilane bonded silica gel as the stationary phase and a mixture of acetonitrile and water (15 : 85) as the mobile phase. As detector a spectrophotometer set at 230 nm, The number of theoretical plates of the column is not less than 3000, calculated with the reference of the peak of paeoniflorin.

Reference solution Weigh accurately a quantity of paeoniflorin CRS, dissolve in dilute ethanol TS to produce a reference solution containing 0.1 mg per ml.

Test solution Cut a quantity of the small or big honeyed pills to pieces. Place 2 g, accurately weighed, in a stopper conical flask, add exactly 50 ml of water, ultrasonicate for 45 minutes and centrifuge at 3000 rpm. Apply exactly 10 ml of the supernatant to a column (15 mm in inner diameter), packed with 3 g of dry polyamide, using water as the eluent. Collect 60 ml of the eluates, evaporate it to dryness on a water bath, dissolve the residue in dilute ethanol TS, transfer to a 10 ml volumetric flask, dilute to volume, shake well.

Procedure Exactly inject 5 μl of each of the reference solution and the test solution into the column, respectively, determine and calculate the content.

It contains not less than 0.70 mg of paeoniflorin ($C_{23}H_{28}O_{11}$) per gram for small honeyed pills, and 1.12 mg for each big honeyed pill, referred to Radix Paeoniae Alba.

Extractum Scutellariae Siccus Carry out the method for high performance liquid chromatography (Appendix Ⅵ D).

Chromatographic system and system suitability Use octadecylsilane bonded silica gel as the stationary phase and a mixture of methanol, water, and acetic acid (40 : 60 : 1) as the mobile phase. As detector a spectrophotometer set at 280 nm. The number of theoretical plates of the column is not less than 4000, calculated with the reference to the peak of baicalin.

Reference solution Weigh accurately a quantity of baicalin CRS, dissolve in dilute ethanol TS to produce a reference solution containing 60 μg per ml.

Test solution Weigh accurately about 1 g of the small or big honeyed pills, in pieces, and add accurately 50 ml of the dilute ethanol. Weigh, heat under reflux for 30 minutes, cool, weigh again, replenish the lost weight with dilute ethanol TS. Filter, and measure accurately 5 ml of the successive filtrate, in a 100 ml volumetric flask. Dilute to volume with dilute ethanol TS, shake well, and use the solution as the test solution.

Procedure Inject accurately 10 μl of each of the reference solution and the test solution into the column, respectively, and calculate the content.

It contains not less than 55 mg of baicalin ($C_{21}H_{18}O_{11}$) per gram for small honeyed pills, and 70 mg for each big honeyed pills, referred to Extractum Scutellariae Siccus.

Action To clear the heart and resolve *phlegm*, and pacify the liver and anchor the mind.

Indications Dizziness, headache, insomnia, restlessness due to blazing of *heart-fire* and *liver-fire*, and excessive *phlegm-heat*; hypertension with above symptoms.

Usage and dosage 20-40 small honeyed pills, once a day; or 1-2 big honeyed pills, once a day.

Precaution Contraindicated for diarrhea patients.

Strength (1) 1.3 g per 20 small honeyed pills
(2) 1.6 g per big honeyed pill

Storage Preserve in tightly closed containers.

Niuhuang Jiedu Pian (牛黄解毒片)

Niuhuang Jiedu Tablets

Ingredients Calculus Bovis Artifactus 5 g; Realgar 50 g; Gypsum Fibrosum 200 g; Radix et Rhizoma Rhei 200 g; Radix Scutellariae 150 g; Radix Platycodi 100 g; Borneolum Syntheticum 25 g; Radix et Rhizoma Glycyrrhizae 50 g.

Procedure Levigate Realgar to very fine powder, pulverize Radix et Rhizoma Rhei to fine powder and triturate Calculus Bovis Artifactus and Borneolum Syntheticum to fine powder. Decoct the other four ingredients with water twice, two hours for each. Combine the decoctions and filter. Evaporate the filtrate to a thick extract, add the powder of Radix et Rhizoma Rhei and Realgar, make granules and dry. Add the powders of Calculus Bovis and Borneolum Syntheticum, mix well, make to 1000 tablets (big tablets) or 1500 tablets (small tablets); or coat the tablets with sugar or film.

Description Tablets or coated tablets with brownish-yellow core; odour, aromatic of borneol; taste, slightly bitter and pungent.

Identification (1) Microscopical: Clusters of calcium oxalate large, 60-140 μm in diameter. Irregular pieces golden-yellow or orange-yellow, lustrous.

(2) Triturate 1 tablet to fine powder and carry out micro-sublimation. To the white sublimate obtained add 1-2 drops of freshly prepared 1% vanillin solution in sulfuric acid, a rose-red colour is produced gradually on the edge of liquid drop.

(3) Grind 2 tablets to fine powder with 10 ml of chloroform and filter. Evaporate the filtrate to dryness, dissolve the residue in 0.5 ml of ethanol as the test solution. Carry out the test for Identification (2) described under Niuhuang Jiedu Pills, beginning at the words "Dissolve cholic acid CRS...". It complies with the same result.

(4) Grind 1 tablet to fine powder, ultrasonicate with 20 ml of methanol for 15 minutes and filter. Evaporate 10 ml of the filtrate to dryness, dissolve the residue in 10 ml of water, add 1 ml of hydrochloric acid, heat under reflux for 30 minutes, allow to cool, extract with two 20-ml quantities of ether. Combine the ether extracts, evaporate to dryness, dissolve the residue in 2 ml of chloroform as the test solution. Prepare a reference drug solution in the same manner of 0.1 g of Radix et Rhizoma Rhei reference drug. Dissolve emodin CRS in methanol to produce a reference solution containing 1 mg per ml. Carry out the method for thin layer chromatography (Appendix Ⅵ B), using silica gel H mixed with sodium carboxymethylcellulose solution as the coating substance, and the upper layer of a mixture of petroleum ether (30-60℃), ethyl formate, and formic acid (15 : 5 : 1) as the mobile phase. Apply separately 4 μl of each of the three solutions to the plate. After developing and removal of the plate, dry in air, examine under ultraviolet light at 365 nm. The five orange yellow fluorescent spots in the chromatogram obtained with the test solution correspond in position and colour to the spots in the chromatogram obtained with the reference drug solution. The orange yellow fluorescent spot in the chromatogram obtained with test solution corresponds in position and colour to the spot in the chromatogram obtained with the reference solution. The spots turn red on exposure to ammonia vapour.

(5) Grind 4 tablets to fine powder, ultrasonicate with 30 ml of ether for 15 minutes, filter and discard the ether extract. Expel the ether from the residue on a water bath, ultrasonicate the residue with 30 ml of methanol for 15 minutes, filter, evaporate the filtrate to dryness, dissolve the residue in 20 ml of water by heating, add dropwise hydrochloric acid to adjust to pH 2-3, extract with 30 ml of ethyl acetate. Evaporate the ethyl acetate extract to dryness, dissolve the residue in 1 ml of methanol as the test solution. Dissolve baicalin CRS in methanol to produce a reference solution containing 1 mg per ml. Carry out the method for thin layer chromatography (Appendix Ⅵ B), using silica gel G mixed with sodium carboxymethylcellulose containing 4% solution of sodium acetate as the coating substance, and a mixture of ethyl acetate, butanone, formic acid, and water (5 : 3 : 1 : 1) as the mobile phase. Apply separately 5 μl of each of the two solutions to the plate. After developing and removal of the plate, dry in air, spray with 1% ferric chloride in ethanol. The spot in the chromatogram obtained with the test solution corresponds in position and colour to the spot in the chromatogram obtained with the reference solution.

Arsenic trioxide Grind 4 tablets, removed the coating for coating tablets, to fine powder. Weigh accurately 1.52 g of the powder, add 20 ml of dilute hydrochloric acid TS, and stirring frequently for 1 hour. Filter, and wash the residue with two 10-ml quantities of dilute hydrochloric acid TS. Stir for 10 minutes, combine the washings with the filtrate to a 500 ml volumetric flask, dilute to volume with water, and shake well. Measure accurately 2 ml of the solution, carry out the method for the limit test for arsenic (Appendix Ⅸ F, method 1), any stain produced is not more intense than that produced by standard arsenic solution.

Other requirements Comply with the general requirements for tablets (Appendix Ⅰ D).

Assay Carry out the method for high performance liquid chromatography (Appendix Ⅵ D).

Chromatographic system and system suitability Use octadecylsilane bonded silica gel as the stationary phase and a mixture of methanol, water, and phosphoric acid (45 : 55 : 0.2) as the mobile phase. As detector a spectrophotometer set at 315 nm, The number of theoretical plates of the column is not less than 3000, calculated with the reference of the peak of baicalin.

Reference solution Weigh accurately a quantity of baicalin CRS, dissolve it in methanol to produce a reference solution containing 30 μg per ml.

Test solution Grind 20 tablets, weighed accurately, removed the coating for coating tablets, to fine powder. To 0.6 g, weighed accurately, add 30 ml of 70% ethanol, ultrasonicate (powder, 250 W; frequence, 33 kHz) for 20 minutes, allow to cool and filter. Transfer the filtrate to a 100 ml of volumetric flask, wash the container and residue with small quantity of 70% ethanol in portions, combine the washings to the same volumetric flask, dilute to volume with 70% ethanol and shake well. Measure accurately 2 ml of the solution to a 10 ml volumetric flask, dilute to volume with 70% ethanol and shake well.

Procedure Exactly inject 5 μl of the test solution and 10 μl of the reference solution into the column, respectively, determine and calculate the content.

It contains not less than 3.0 mg of baicalin ($C_{21}H_{18}O_{11}$) per small tablet, or 4.5 mg per big tablet, referred to Radix Scutellariae.

Action To clear *heat* and *toxicity*.

Indications Swollen painful throat, swollen painful gums, sores on the mouth and tongue or swollen bloodshot eyes with pain due to hyperactivity of interior *heat*.

Usage and dosage 2 big tablets or 3 small tablets, 2-3 times a day.

Precaution Contraindicated for pregnant women.

Storage Preserve in tightly closed containers.

Niuhuang Jiedu Wan
(牛黄解毒丸)

Niuhuang Jiedu Pills

Ingredients Calculus Bovis Artifactus 5 g; Realgar 50 g; Gypsum Fibrosum 200 g; Radix et Rhizoma Rhei 200 g; Radix Scutellariae 150 g; Radix Platycodi 100 g; Borneolum Syntheticum 25 g; Radix et Rhizoma Glycyrrhizae 50 g.

Procedure Levigate Realgar to very fine powder, pulverize Gypsum Fibrosum, Radix et Rhizoma Rhei, Radix Scutellariae, Radix Platycodi and Radix et Rhizoma Glycyrrhizae to fine powder. Triturate Borneolum Syntheticum and Calculus Bovis Artifactus with the above fine powders, sift and mix well. To each 100 g of the powder add 100-110 g of refined honey to make big honeyed pills.

Description Brownish-yellow big honeyed pills; odour, aromatic and characteristic of Borneolum Syntheticum; taste, slightly sweet, then bitter and pungent.

Identification (1) Microscopical: Fibres pale yellow, fusiform, with thickened walls and minute pit-canals. Fibre bundles surrounded by parenchymatous cells containing prisms of calcium oxalate, forming crystal fibres. Clusters of calcium oxalate large, 60-140 μm in diameter. Anastomosing laticiferous tubes 14-25 μm in diameter, containing pale yellow granular contents. Irregular pieces golden-yellow or orange-yellow, lustrous. Irregular plate crystals colourless, with straight striations.

(2) To 3 g of the pill, in pieces, triturate well with 2 g of kieselguhr, ultrasonicate with 15 ml of chloroform for 20 minutes, filter and keep the residue for later use. Evaporate the filtrate to dryness, dissolve the residue in 0.5 ml of ethanol as the test solution. Dissolve cholic acid CRS in ethanol to produce a solution containing 1 mg per ml as the reference solution. Carry out the method for thin layer chromatography (Appendix Ⅵ B), using silica gel G as the coating substance and the upper layer of a mixture of *n*-hexane, ethyl acetate, methanol, and acetic acid, (20 : 25 : 3 : 2) as the mobile phase. Apply separately 5 μl each of the two solutions to the plate. After developing and removal of the plate, dry in air, spray with 10% sulfuric acid in ethanol, heat at 105 ℃ for about 10 minutes, and examine under ultraviolet light at 365 nm. The fluorescent spot in the chromatogram obtained with the test solution corresponds in position and colour to the spot in the chromatogram obtained with the reference solution.

(3) Dissolve a mixture of (±)-borneol and (±) isoborneol CRS in dehydrated ethanol to produce a reference solution containing 1 mg per ml. Carry out the method for thin layer chromatography (Appendix Ⅵ B), using silica gel G as the coating substance, and a mixture of cyclohexane and ethyl acetate (17 : 3) as the mobile phase. Apply separately 2 μl of each of the test solution obtained under the test of Identification (2) and the above reference solution to the plate. After developing and removal of the plate, dry in air, spray with 5% vanillin in sulfuric acid and heat to the spots distinct. The spots in the chromatogram obtained with the test solution correspond in position and colour to the spots in the chromatogram obtained with the reference solution.

(4) Expel the solution from the residue obtained under the test of Identification (2), ultrasonicate it with 30 ml of methanol for 20 minutes and filter. Evaporate 5 ml of the filtrate to dryness (evaporate the spare filtrate to dryness for later use), dissolve the residue in 10 ml of water and 1 ml of hydrochloride acid, heat on a water bath for 30 minutes, cool immediately, extract with four 10-ml quantities of ether by shaking. Combine the ether extracts, evaporate to dryness, dissolve the residue in 1 ml of ethyl acetate as the test solution. Prepare a solution of 0.1 g of Radix et Rhizoma Rhei reference drug and 20 ml of methanol in the same manner as the reference drug solution. Carry out the method for thin layer chromatography (Appendix Ⅵ B), using silica gel H mixed with sodium carboxy-methylcellulose as the coating substance, and the upper layer of a mixture of petroleum ether (30-60℃), ethyl formate and formic acid (15 : 5 : 1) as the mobile phase. Apply separately 3 μl of each of the two solutions to the plate. After developing and removal of the plate, dry in air, examine under ultraviolet light at 365 nm. Five orange fluorescent spots in the chromatogram obtained with the test solution correspond in position and colour to the spots in the chromatogram obtained with the reference drug solution. The spots turn red in daylight on exposure to ammonia vapour.

(5) Dissolve the residue, obtained under the test of Identification (4), in a quantity of ethanol, apply it to a column packed with polyamide (14-30 meshes), elute firstly with 125 ml of water, discard the eluate, then continuously elute with 50 ml of 85% ethanol, collect the eluates, evaporate to dryness on a water bath. Dissolve the residue in 2 ml of dehydrated ethanol as the test solution. Dissolve baicalin CRS in dehydrated ethanol to produce a reference solution containing 1 mg per ml. Carry out the method for thin layer chromatography (Appendix Ⅵ B), using silica gel G mixed with sodium carboxymethylcellulose containing 4% solution of sodium acetate as the coating substance, and a mixture of ethyl acetate, butanone, formic acid and water (5 : 3 : 1 : 1) as the mobile phase. Apply separately 6 μl of the test solution and 3 μl of the reference solution to the plate. After developing and removal of the plate, dry in air, spray with 1% ferric chloride in ethanol. The spot in the chromatogram obtained with the test solution corresponds in position and colour to the spot in the chromatogram obtained with the reference solution.

Arsenic trioxide Cut a quantity of the pills to pieces, weigh accurately 2.9 g, add 20 ml of dilute hydrochloric acid TS, stirring frequently for 40 minutes, and filter. Wash the residue with two 10-ml quantities of dilute hydrochloric acid TS, and stir for 10 minutes. Combine the washings with the filtrate to a 500 ml volumetric flask, dilute to volume with water and shake well. Measure accurately 2 ml of the solution, add 5 ml of hydrochloric acid and 21 ml of water, carry out the method for the limit test for arsenic (Appendix Ⅸ F, method 1), any stain produced is not more intense than that produced by standard arsenic solution.

Other requirements Comply with the general requirements for pills (Appendix Ⅰ A).

Assay Carry out the method for high performance liquid chromatography (Appendix Ⅵ D).

Chromatographic system and system suitability Use octadecylsilane bonded silica gel as the stationary phase and a mixture of methanol, water and phosphoric acid (45 : 55 : 0.2) as the mobile phase. As detector a spectrophotometer set at 315 nm. The number of theoretical plates of the column is not less than 3000, calculated with the reference of the peak of baicalin.

Reference solution Weigh accurately a quantity of baicalin CRS, dissolve in methanol to produce a reference solution containing 30 μg per ml.

night-terrors, anorexia, dyspepsia, developmental retardation, etc.

Usage and dosage Taken after dissolved in boiled wat g, for children younger than 2 years old; 7 g, for between 2 and 7 years old; 10 g, for children old years; 3 times a day.

Strength 5 g per pack

Storage Preserve in tightly closed contair

Longqing Pian
(瘰清片)

Longqing Tablets

Ingredients Rhizoma Patriniae; Flos Herba Hedyotis Agrimoniae; Chinensis.

Procedure sift. Flos and two

ngredients Scorpio 120 g; Bombyx Batryticatus (processed) 120 g; Calculus Bovis Artifactus 24 g; Cinnabaris 160 g; Borneolum Syntheticum 20 g; Rhizoma Coptidis 160 g; Arisaema cum Bile 80 g; Rhizoma Gastrodiae 160 g; Radix et Rhizoma Glycyrrhizae 80 g.

Procedure Levigate Cinnabaris to very fine powder. Pulverize Scorpio, Bombyx Batryticatus, Rhizoma Coptidis, Arisaema cum Bile, Rhizoma Gastrodiae and Radix et Rhizoma Glycyrrhizae to fine powder. Triturate Calculus Bovis Artifactus and Borneolum Syntheticum with the above powder, sift and mix well.

Description A brownish-red powder; odour, aromatic; taste, pungent, cool and bitter.

Identification (1) Microscopical: Fragments of body wall pale yellow to yellow, with reticulate striations and rounded alveoli, sometimes showing brown seta. Fragments of body wall colourless, with minute hyphae. Sclerenchymatous cells polygonal or elongated polygonal, 70-180 μm in diameter, with slightly lignified, thickened walls and distinct pits. Fibre bundles bright yellow, walls slight thickened, with distinct pits, surrounded by parenchymatous cells containing prisms of calcium oxalate, forming crystal fibres. Irregular and minute granules deep brownish-red, lustrous, with dark black edge.

(2) Take 0.6 g of the powder, rinse with water untill a small quantity of dark red precipitate is obtained. Carry out the test of Identification (2) as described under Cinnabaris, using the precipitate, the same reaction is produced.

(3) Ultrasonicate 0.6 g of the powder, in 5 ml of ethanol for 20 minutes, filter and use the filtrate as the test solution. Dissolve cholic acid CRS in ethanol to produce a solution containing 2 mg per ml as the reference solution. Carry out the method for chromatography (Appendix Ⅵ B), using silica gel G as the coating substance and the upper layer of a mixture of *n*-hexane, ethyl acetate, acetic acid, and

2 : 3) as the mobile phase. Apply
h of the test solution and 1 μl of the
ıe plate. After developing and removal
ir. Spray with 10% sulfuric acid in
105℃ for several minutes. Examine
ht at 365 nm, the fluorescent spot in
ıed with the test solution corresponds
to the spot in the chromatogram
ce solution.
Coptidis reference drug, add 10 ml
solution in the same manner as
for Identification (3) as the
arry out the method for thin layer
ς Ⅵ B), using silica gel G as the
xture of benzene, ethyl acetate,
concentrated ammonia TS (12 :
phase. Apply separately 1 μl of
der the test of Identification (3)
ıg solution to the plate. After
ıe plate, dry in air. Examine
65 nm, the yellow fluorescent
ıtained with the test solution
colour to the spots in the
e reference drug solution.
add 25 ml of chloroform,
nd filter. Keep the residue
ate to dryness, and dissolve
he test solution. Dissolve a
...col and (±)-isoborneol CRS in
...ated ethanol to produce a reference solution containing 1 mg per ml. Carry out the method for thin layer chromatography (Appendix Ⅵ B), using silica gel G as the coating substance and a mixture of cyclohexane and ethyl acetate (17 : 3) as the mobile phase. Apply separately 4 μl of the test solution and 2 μl of the reference solution to the plate. After developing and removing the plate, dry in air. Spray with the vanillin in sulfuric acid TS, heat at 105℃ to the spots clear. The spot in the chromatogram obtained with the test solution corresponds in position and colour to the spot in the chromatogram obtained with the reference solution.

(6) To the residue, obtained under the Identification (5), add 25 ml of *n*-butanol saturated with water, and ultrasonicate for 30 minutes and filter. Evaporate the filtrate to dryness, stir well with a small quantity of neutral aluminium oxide. Heat to dryness and apply to a column (1-1.5 cm in diameter) packed with neutral aluminium oxide (100-200 meshs, 4 g). Elute with 25 ml of 10% ethanol, collect the eluates, evaporate to dryness, and dissolve the residue in 1 ml of methanol as the test solution. Dissolve gastrodin CRS in dehydrated ethanol to produce a reference solution containing 1 mg per ml. Carry out the method for thin layer chromatography (Appendix Ⅵ B), using silica gel G as the coating substance and a mixture of cyclohexane-methanol (7 : 3) as the mobile phase. Apply separately 8 μl of the test solution and 2 μl of the reference solution to the plate. After developing and removing the plate, dry in air. Spray with 10% sulfuric acid in ethanol, and heat at 105℃ to the spots clear. The spot in the chromatogram obtained with the test solution corresponds in position and colour to the spot in the chromatogram obtained with the reference solution.

Other requirements Complies with the general requirements for powders (Appendix Ⅰ B).

Assay Carry out the method for high performance liquid chromatography (Appendix Ⅵ D).

Chromatographic system and system suitability Use octadecylsilane bonded silica gel as the stationary phase and a mixture of acetonitrile and water (50 : 50) (containing 0.34

g of potassium dihydrogen phosphate and 0.17 g of sodium dodecylsulphonate per 100 ml) as the mobile phase. As detector a spectrophotometer set at 346 nm. The number of theoretical plates of the column is not less than 6000, calculated with the reference to the peak of berberine hydrochloride.

Reference solution Weigh accurately a quantity of berberine hydrochloride CRS, dissolve in a mixture of hydrochloric acid and methanol (1 : 100) to produce a reference solution containing 20 μg per ml.

Test solution Weigh accurately about 0.5 g of the powder, mixed well, place in a stopper conical flask, add accurately 50 ml of a mixture of hydrochloric acid and methanol (1 : 100), weigh. Heat under reflux on a water bath at 60℃ for 15 minutes Ultrasonicate (power 250 W, frequency 50 kHz) for 30 minutes, cool, weigh again, and replenish the lost weight with a mixture of hydrochloric acid and methanol (1 : 100). Shake well, filter, and use the successive filtrate as the test solution.

Procedure Inject accurately 10 μl of each of the reference solution and the test solution into the column, respectively, and calculate the content.

It contains not less than 6.0 mg of berberine hydrochloride ($C_{20}H_{18}ClNO_4$) per gram, referred to Rhizoma Coptidis.

Action To clear *heat* and relieve *toxicity*, and arrest spasm and convulsion.

Indications Child convulsion, high fever, tic of hands and feet, excessive *phlegm*, coma and delirium.

Usage and dosage 0.6-0.9 g, 2-3 times a day; appropriate reduction of the dosage for children under 3 years of age.

Strength 0.6 g per bottle

Storage Preserve in tightly closed containers.

Niuhuang Qingxin Wan (牛黄清心丸)

Niuhuang Qingxin Pills

Ingredients Calculus Bovis 25.7 g; Radix Angelicae Sinensis 45 g; Rhizoma Chuanxiong 39 g; Radix et Rhizoma Glycyrrhizae 150 g; Rhizoma Dioscoreae 210 g; Radix Scutellariae 45 g; Semen Armeniacae Amarum (stir-baked) 37.5 g; Semen Sojae Germinatum 57 g; Fructus Jujubae (cored) 90 g; Rhizoma Atractylodis Macrocephalae (stir-baked) 75 g; Poria 48 g; Radix Platycodi 39 g; Radix Saposhnikoviae 45 g; Radix Bupleuri 39 g; Colla Corii Asini 51 g; Rhizoma Zingiberis 25 g; Radix Paeoniae Alba 75 g; Radix et Rhizoma Ginseng 75 g; Massa Medicata Fermentata (stir-baked) 75 g; Cortex Cinnamomi 54 g; Radix Ophiopogonis 44 g; Radix Ampelopsis 22.5 g; Pollen Typhae (stir-baked) 7.5 g; Moschus 6.4 g; Borneolum Syntheticum 16.1 g; Pulvis Cornus Bubali Concentratus 28.5 g; Cornu Saigae Tataricae 28.4 g; Cinnabaris 69.7 g; Realgar 24 g.

Procedure Levigate Cinnabaris and Realgar to very fine powder respectively. File Cornu Saigae Tataricae to fine powder. Pulverize the other ingredients, except Calculus Bovis, Moschus, Borneolum Syntheticum and Pulvis Cornus Bubali Concentratus to fine powder. Triturate Calculus Bovis, Moschus, Borneolum Syntheticum and Pulvis Cornus Bubali Concentratus with the above powders, sift and mix well. To each 100 g of the powder add 90-110 g of refined honey to make big honeyed pills or add water and amount of refined honey to make water-honeyed pills.

Description Reddish-brown big honeyed pills or water-honeyed pills; odour, aromatic; taste, slightly sweet.

Identification (1) Microscopical: Irregular branched masses colourless, dissolved in chloral hydrate solution; hyphae colourless or pale brown, 4-6 μm in diameter. Clusters of calcium oxalate 18-32 μm in diameter, occurring in parenchymatous cells, often arranged in rows or several clusters in one cell. Needles of calcium oxalate fine, 10-32 μm long, irregularly filling in parenchymatous cells. Raphides of calcium oxalate 24-50 μm long, present in subrounded or elliptical mucilage cells. Fibre bundles surrounded by parenchymatous cells containing prisms of calcium oxalate, forming crystal fibres. Fibres pale yellow, fusiform, with thickened walls and fine pit-canals. Anastomosing laticiferous tubes 14-25 μm in diameter, containing yellowish granular contents. Stone cells orange, conchoidal, with relatively thickened walls, showing distinct pits at the broader side. Epidermal cells of pericarp yellowish-brown to reddish-brown, subpolygonal in surface view; cuticle thickened up to 10 μm in sectional view. Paraside cells of testa pale yellow, 45-80 μm long. Pollen grains yellow, subrounded or ellipsoidal, about 30 μm in diameter, extine with minute warty protuberances. Irregular small granules dark brownish-red, lustrous, dark black edged. Irregular pieces golden-yellow or orange yellow, lustrous. Irregular pieces greyish-white or pale greyish-yellow, slightly lustrous, surface with pigment granules and irregular longitudinal fissures.

(2) Triturate well 3 g of the big honeyed pills with 2 g of kiselguhr or pulverize 2 g of water-honeyed pills, add 30 ml of chloroform, ultrasonicate for 30 minutes and filter. Evaporate the filtrate to dryness, dissolve the residue in 1 ml of ethanol as the test solution. Dissolve cholic acid CRS in ethanol to produce a solution containing 2 mg per ml as the reference solution. Carry out the method for thin layer chromatography (Appendix Ⅵ B), using silica gel G as the coating substance and a mixture of isooctane, ethyl acetate, and glacial acetic acid (15 : 7 : 5) as the mobile phase. Apply separately 2 μl of each of the two solutions to the plate. After developing and removal of the plate, dry in air, spray with 10% sulfuric acid in ethanol, heat at 105 ℃ to the spots clear and examine under ultraviolet light at 365 nm. The fluorescent spot in the chromatogram obtained with the test solution corresponds in position and colour to the spot in the chromatogram obtained with the reference solution.

(3) Triturate well 6 g of the big honeyed pills, in pieces, with 3 g of kieselguhr; or pulverize 2 g of the water-honeyed pills to fine powder. Add 30 ml of ether, and ultrasonicate for 10 minutes and filter. Expel the ether from the residue, add 30 ml of ethanol, and ultrasonicate for 30 minutes. Filter, evaporate the filtrate to dryness, and dissolve the residue in 15 ml of water by heating gently. Adjust to pH1-2 with hydrochloric acid, and extract with two 20-ml quantities of ethyl acetate. Combine the ethyl acetate extract, evaporate to dryness, and dissolve the residue in 1 ml of methanol as the test solution. Dissolve baicalein CRS in methanol to produce a reference solution containing 1 mg per ml. Carry out the method for thin layer chromatography (Appendix Ⅵ B), using silica gel G as the coating substance and a mixture of ethyl acetate-butanone, formic acid, and water (5 : 3 : 1 : 1) as the mobile phase. Apply separately 4-6 μl of each of the reference solution and the test solution to the plate. After developing and removing the plate, dry in air. Spray with 2% ferric chloride in ethanol. The spot in the chromatogram obtained with the test solution corresponds in position and colour to the spot in the chromatogram obtained with the reference solution.

(4) Triturate well 15 g of the big honeyed pills, in pieces, with 7g of kieselguhr; or pulverize 8 g of the water-honeyed

pills to fine powder. Add 50 ml of chloroform, ultrasonicate for 30 minutes, and filter. Discard the chloroform extract, and expel the ether from the residue. Add 50ml of *n*-butanol saturated with water to the residue, and ultrasonicate for 40 minutes. Filter, wash the filtrate with three times quantity of ammonia TS. Separate the layer of *n*-butanol, evaporate to dryness, and dissolve in 1 ml of methanol as the test solution. Dissolve ginsenoside Rb_1 CRS, ginsenoside Re CRS, and ginsenoside Rg 1 CRS in methanol to produce a mixture containing 1 mg of each per ml as the reference solution. Carry out the method for thin layer chromatography (Appendix Ⅵ B), using silica gel G as the coating substance and a mixture of chloroform, methanol, and water (65 : 35 : 10) standing below 10 ℃ over 12 hous as the mobile phase. Apply separately 4-6 μl of each of the reference solution and the test solution to the plate. After developing and removing the plate, dry in air. Spray with 10% sulfuric acid in ethanol. Heat at 105 ℃ to the spots clear. The spots in the chromatogram obtained with the test solution correspond in position and colour to the spots in the chromatogram obtained with the reference solution.

(5) Triturate well 12 g of the big honeyed pills, in pieces, with 6 g of kieselguhr; or pulverize 8 g of the water-honeyed pills to fine powder. Add 30 ml of ether, and heat under reflux for 30 minutes and filter. Evaporate the filtrate to dryness, and dissolve the residue in 1 ml of ethyl acetate as the test solution. Prepare a solution of 0.5 g of Radix Angelicae Sinensis reference drug and 20 ml of ether in the same manner as the reference drug solution. Carry out the method for thin layer chromatography (Appendix Ⅵ B), using silica gel G as the coating substance and a mixture of *n*-hexane-ethyl acetate (9 : 1) as the mobile phase. Apply separately 6-10μl of each of the reference drug solution and the test solution to the plate. After developing and removal of the plate, dry in air. Examine under ultraviolet light at 365 nm. The fluorescent spots in the chromatogram obtained with the test solution correspond in position and colour to the spots in the chromatogram obtained with the reference drug solution.

Other requirements Comply with the general requirements for pills (Appendix Ⅰ A).

Action To clear the heart and resolve *phlegm*, and relieve convulsion and expel *wind*.

Indications Dizziness, excessive *phlegm*, coma, aphasia, convulsion and epilepsy due to *wind-phlegm* obstructing the orifices.

Usage and dosage 1 big honeyed pill, or 1.5 g of the water-honeyed pills, once a day.

Precaution Be cautious about pregnant women.

Strength (1) 1.5 g per 20 pills for water-honeyed pills
(2) 3 g per big honeyed pill

Storage Preserve in tightly closed containers.

Niuhuang Shangqing Jiaonang (牛黄上清胶囊)

Niuhuang Shangqing Capsules

Ingredients Calculus Bovis Artifactus 2.9 g; Herba Menthae 44.1 g; Flos Chrysanthemi 58.5 g; Flos Schizonepetae 23.5 g; Radix Angelicae Dahuricai 23.5 g; Rhizoma Chuanxiong 23.5 g; Fructus Gardeniae 73.5 g; Rhizoma Coptidis 23.5 g; Cortex Phellodendri Chinensis 14.7 g; Radix Scutellariae 73.5g; Radix et Rhizoma Rhei 117.7 g; Fructus Forsythiae 73.5 g; Radix Paeoniae Rubra 23.5 g; Radix Angelicae Sinensis 73.5 g; Radix Rehmanniae 94.1 g; Radix Platycodonis 23.5 g; Radix et Rhizoma Glycyrrhizae 14.7 g; Gypsum Fibrosum 117.7 g; Borneolum Syntheticum 14.7 g.

Procedure Pulverize Radix et Rhizoma Rhei, Borneolum Syntheticum, Calculus Bovis Artifactus to fine power respectively, and sift for later use. Distill volatile oil of Herba Menthae, Flos Schizonepetae, Radix Angelicae Dahuricai, Rhizoma Chuanxiong, Flos Chrysanthemi, and Fructus Forsythiae, and collect aqueous extract solution in another container for later use. Decoct the drug residue and Fructus Gardeniae and other eight ingredients with water twice, 1.5 hours for each time. Combine the decoctions, filter, mix the filtrate and the above aqueous extract solution and concentrate to a thick extract with a relative density of 1.32-1.36 (55℃), add the powder of Radix et Rhizoma Rhei, dry at 80℃, pulverize to fine powder and sift. Pulverize Calculus Bovis Artifactus and Borneolum Syntheticum with the above powder. Spray with the volatile oil dissloved in ethanol, mix thoroughly, sift and make to 1000 capsules.

Description Capsules containing brownish-yellow to dark brown powder; odour, aromatic; taste, slightly bitter.

Identification (1) To 1.2 g of the content, add 20 ml of chloroform, ultrasonicate for 20 minutes, filter and use the filtrate as the test solution. Dissolve a mixture of (±)-borneol and (±)-isoborneol CRS in chloroform to produce a solution containing 0.4 mg per ml as the reference solution. Carry out the method for thin layer chromatography (Appendix Ⅵ B), using silica gel G as the coating substance and a mixture of toluene and ethyl acetate (17 : 1) as the mobile phase. Apply separately 10 μl of each of the above two solutions to the plate. After developing and removal of the plate, dry in air. Spray with 10% phosphomolybdic acid in ethanol, and heat at 105℃ to the spots clear. The blue spots in the chromatogram obtained with the test solution correspond in position and colour to the spots in the chromatogram obtained with the reference solution.

(2) Evaporate the remainder test solution under Identification (1), and dissolve the residue in 1 ml of ethanol as the test solution. Dissolve cholic acid CRS and hyodeoxycholic acid CRS in ethanol to produce a solution containing 2 mg per ml of each as the reference solution. Carry out the method for thin layer chromatography (Appendix Ⅵ B), using silica gel G as the coating substance and a mixture of isooctane, ethyl acetate and glacial acetic acid (15 : 7 : 5) as the mobile phase. Apply separately 2 μl of each of the above two solutions to the plate. After developing and removal of the plate, dry in air. Spray with 10% sulfuric acid in ethanol, and heat at 105 ℃ to the spots clearly. The spots in the chromatogram obtained with the test solution correspond in position and colour to the spots in the chromatogram obtained with the reference solution.

(3) To 0.9 g of the content, add 10 ml of methanol, ultrasonicate for 20 minutes, filter and use the filtrate as the test solution. Prepare a solution of 0.2 g of Rhizoma Coptidis reference drug in the same manner as the reference drug solution. Dissolve Berberine hydrochloride CRS in methanol to produce a solution containing 1 mg per ml as the reference solution. Carry out the method for thin layer chromatography (Appendix Ⅵ B), using silica gel G as the coating substance and a mixture of toluene, ethyl acetate, isopropanol, methanol and concentrated ammonia TS (12 : 6 : 3 : 3 : 1) as the mobile phase. Apply separately 5 μl of the test solution and 2 μl of each of the reference drug solution and the reference solution to the plate. After developing in a chamber pre-equilibrated with ammonia vapor for few minutes and removal of the plate, dry in air, and examine under ultraviolet light at 365 nm. The fluorescent

spots in the chromatogram obtained with the test solution correspond in position and colour to the spots in the chromatogram obtained with the reference drug solution and the reference solution.

(4) To 4.5 g of the content, add 50 ml of ethanol, heat under reflux for 30 minutes, filter and evaporate the filtrate to dryness. Dissolve the residue in 10 ml of water, and extract with two 20-ml and one 10-ml quantities of n-butanol saturated by water, combine the n-butanol extracts, and wash with 20 ml of water saturated by n-butanol. Evaporate the n-butanol extracts to dryness, and dissolve the residue in 4 ml ethanol. Apply the methanol solution to a column (10-15 mm in internal diameter) packed with neutral aluminum oxide (100-200 mesh, 3 g) and elute with 100 ml of ethanol. Collect the eluate, evaporate eluate on a water bath to dryness, and dissolve the residue in 2 ml of ethanol as the test solution. Dissolve geniposide CRS in ethanol to produce a solution containing 4 mg per ml as the reference solution. Carry out the method for thin layer chromatography (Appendix Ⅵ B), using silica gel G mixed with sodium carboxymethylcellulose as the coating substance, and a mixture of chloroform and methanol (3 : 1) as the mobile phase. Apply separately 5 μl of each of the above two solutions to the plate. After developing and removal of the plate, dry in air. Spray with 10% sulfuric acid in ethanol, and heat at 105℃ to the spots clear. The spot in the chromatogram obtained with the test solution corresponds in position and colour to the spot in the chromatogram obtained with the reference solution.

Other requirements Comply with the general requirements for capsules (Appendix Ⅰ L).

Assay ***Radix et Rhizoma Rhei*** Carry out the method for high performance liquid chromatography (Appendix Ⅵ D).

Chromatographic system and system suitability Use octadecylsilane bonded silica gel as the stationary phase, and a mixture of methanol and 0.1% solution of phosphoric acid (90 : 10) as the mobile phase. As detector a spectrophotometer set at 254 nm. The number of theoretical plates of the column is not less than 3000, calculated with the reference to the peak of emodin.

Reference solution Weigh accurately a quantity of emodin CRS, dissolve in methanol, to produce a solution containing 20 μg per ml.

Test solution Weigh accurately 0.3 g of the content obtained under the test of weight variation, pulverized to fine powder, in a ground-bottom flask. Add a quantity of 2.5 mol/L solution of sulfuric acid and heat under reflux for 2 hours, cool. Extract with 20 ml of chloroform under reflux for 1 hour and repeat the process for 3 times, combine the chloroform extracts and wash with 40 ml of water. Evaporate the chloroform extract on a water bath to dryness, and dissolve the residue in methanol. Transfer to a 25 ml volumetric flask, dilute with methanol to volume, mix well, and filter, and use the successive filtrate as the test solution.

Procedure Inject accurately 20 μl of each of the reference solution and the test solution into the column respectively and measure.

It contains not less than 0.22 mg of emodin ($C_{15}H_{10}O_5$) per capsule, referred to Radix et Rhizoma Rhei.

Borneolum Syntheticum Carry out the method for gas chromatography (Appendix Ⅵ E).

Chromatographic system and system suitability Use 10% polyethylene glycol (PEG)-20 M as the stationary phase and maintain the column temperature at 140 ℃. The number of theoretical plates of the column is not less than 4000, calculated with the reference of the peak of (±)-borneol.

Correction factor Dissolve a quantity of methyl salicylate, accurately weighed, in ethyl acetate to produce a solution containing 2 mg per ml as internal standard solution. Dissolve 20 mg of (±)-borneol CRS, accurately weighed, in a 10 ml volumetric flask and dilute with the internal standard solution to volume, and mix well. Inject 1 μl of the solution into column, calculate the correction factor.

Procedure Weigh accurately 0.5 g of the content, obtained under the test of packing variation, pulverized to fine powder, in a stopper conical flask, add accurately 10 ml of the internal standard solution, weigh. Ultrasonicate for 15 minutes (power, 300 W; frequency, 25 kHz), cool, weigh again, replenish the loss weight with ethyl acetate, stir well and filter. Discard the initial fitrate, and use the successive filtrate as the test solution. Inject 1 μl of the test solution into the column and calculate the contents.

It contains not less than 6.2 mg of (±)-borneol ($C_{10}H_{18}O$) per capsule, referred to Borneolum Syntheticum.

Action To clear *heat* and purge *fire*, and disperse *wind* and kill pain.

Indications Headache, dizziness, bloodshot eyes, tinnitus, sore throat, sores on the mouth and tongue, or swollen painful gums and constipation due to abundant *heat* in the interior and upward attacking by *wind-fire*.

Usage and dosage 3 capsules, twice a day.

Precaution Be cautious about pregnant women.

Strength 0.3 g per capsule

Storage Preserve in tightly closed containers.

Niuhuang Shangqing Wan (牛黄上清丸)

Niuhuang Shangqing Pills

Ingredients Calculus Bovis Artifactus 2 g; Herba Menthae 30 g; Flos Chrysanthemi 40 g; Spica Schizonepetae 16 g; Radix Angelicae Dahuricae 16 g; Rhizoma Chuanxiong 16 g; Fructus Gardeniae 50 g; Rhizoma Coptidis 16 g; Cortex Phellodendri Chinensis 10 g; Radix Scutellariae 50 g; Radix et Rhizoma Rhei 80 g; Fructus Forsythiae 50 g; Radix Paeoniae Rubra 16 g; Radix Angelicae Sinensis 50 g; Radix Rehmanniae 64 g; Radix Platycodonis 16 g; Radix et Rhizoma Glycyrrhizae 10 g; Gypsum Fibrosum 80 g; Borneolum Syntheticum 10 g.

Procedure Pulverize the above ingredients, except Calculus Bovis Artifactus and Borneolum Syntheticum, to fine powder. Triturate Calculus Bovis Artifactus and Borneolum Syntheticum with the fine powder mentioned above, sift and mix well. To each 100 g of the powder add 120-130 g of refined honey to make big honeyed pills; or make watered pills with 4% refined honey and water.

Description Reddish-brown to blackish-brown big honeyed pills or brownish-yellow watered pills; odour, aromatic; taste, bitter.

Identification (1) Microscopical: Fibre bundles bright yellow, with slightly thickened walls and distinct pits. Fibres pale yellow, fusiform, with thickened walls and minute pit-canals. Fibre bundles surrounded by parenchymatous cells containing prisms of calcium oxalate, forming crystal fibres. Fibres of endocarp short fusiform, the upper and lower layers crisscrossly arranged. Stone cells bright yellow, branched, with thickened walls and distinct striations. Stone cells of testa yellow or pale brown, mostly broken, the whole ones

long polygonal, rectangular or irregular, with thickened walls and big rounded pits, lumina brownish-red. Parenchyma greyish-brown to blackish-brown, cells mostly shrunken, each containing a brown nucleus-like mass. Clusters of calcium oxalate large, 60-140 μm in diameter. Pollen grains subrounded, 24-34 μm in diameter, extine with spinules of 3-5 μm long, and 3 germinal apertures. Glandular scales with a 8-celled head, oblate, up to 90 μm in diameter, and a unicellular short stalk. Irregular plate crystals colourless, with straight striations.

(2) Cut 3 g of the big honeyed pills into pieces, or pulverize 2 g of the watered pills to fine powder, add 50 ml of methanol, ultrasonicate for 20 minutes, filter and evaporate 5 ml of the filtrate to dryness and keep the other filtrate for latter use. Dissolve the residue in 10 ml of water, add 1 ml of hydrochloric acid, heat on a water bath for 30 minutes, cool immediately and extract with two 10-ml quantities of ether. Combine the ether extracts and evaporate to dryness. Dissolve the residue in 1 ml of ethyl acetate as the test solution. Prepare a solution of 0.1 g of Radix et Rhizoma Rhei reference drug in the same manner as the reference drug solution. Carry out the method for thin layer chromatography (Appendix Ⅵ B), using silica gel H mixed with sodium carboxymethylcellulose as the coating substance and the upper layer of a mixture of petroleum ether (30-60℃), ethyl formate, and formic acid (15 : 5 : 1) as the mobile phase. Apply separately 2 μl of each of the two solutions to the plate. After developing and removal of the plate, dry in air, and examine under ultraviolet light at 365 nm. The five orange fluorescent spots in the chromatogram obtained with the test solution correspond in position and colour to the spots in the chromatogram obtained with the reference drug solution. Exposure to ammonia vapour and examine under sunlight, the colour of the spots turns red.

(3) Use the methanolic extract obtained under Identification (2) as the test solution. Prepare of solution with 0.1 g of Rhizoma Coptidis reference drug and 10 ml of methanol in the same manner as the reference drug solution. Dissolve berberine hydrochloride CRS in methanol to produce a solution containing 1 mg per ml as reference solution. Carry out the method for thin layer chromatography (Appendix Ⅵ B), using silica gel G as the coating substance and a mixture of benzene, ethyl acetate, methanol, isopropanol, and concentrated ammonia TS (12 : 6 : 3 : 3 : 1) as the mobile phase. Apply separately 3-5 μl of the test solution and 1-2 μl of each of the reference drug solution and the reference solution to the plate. After developing in a chamber pre-equilibration with ammonia vapour and removal of the plate, dry in air, and examine under ultraviolet light at 365 nm. The yellow fluorescent spots in the chromatogram obtained with the test solution correspond in position and colour to the spots in the chromatogram obtained with reference drug solution; and one yellow fluroescent spot corresponds in position and colour to the spot in the chromatogram obtained with the reference solution.

(4) Cut 12 g of the big honeyed pills into pieces; or pulverize 1 g of the watered pills to fine powder; add 30 ml of ether, heat under reflux for 30 minutes, and filter. Evaporate the filtrate to dryness, and dissolve the residue in 1 ml of ethyl acetate as the test solution. Prepare a solution with 0.1 g of Radix Angelicae Sinensis reference drug and 20 ml of ether in the same manner as the reference drug solution. Carry out the method for thin layer chromatography (Appendix Ⅵ B), using silica gel G as the coating substance and a mixture of *n*-hexane and ethyl acetate (9 : 1) as the mobile phase. Apply separately 2-10 μl of each of the reference drug solution and the test solution to the plate. After developing and removial the palte, dry in air. Examine under ultraviolet light at 365 nm. The fluorescent spots in the chromatogram obtained with the test solution correspond in position and colour to the spots in the chromatogram obtained with the reference drug solution.

Other requirements Comply with the general requirements for pills (Appendix Ⅰ A).

Assay Carry out the method for high performance liquid chromatography (Appendix Ⅵ D).

Chromatographic system and system suitability Use octadecylsilane bonded silica gel as the stationary phase and a mixture of methanol, water and phosphoric acid (40 : 60 : 0.2) as the mobile phase. As detector a spectrophotometer set at 280 nm. The number of theoretical plates of the column is not less than 2500, calculated with the reference to the peak of baicalin.

Reference solution Weigh accurately a quantity of baicalin CRS, dissolve it in methanol to produce a reference solution containing 60 μg per ml.

Test solution Cut a quantity of the big honeyed pills to pieces, to 1 g, accurately weigh, add exactly 50 ml of dilute ethanol TS and weigh; or pulverize a quantity of the watered pills to fine powder, weight accurately 1 g of the powder, add exactly 100 ml of dilute ethanol TS and weight, ultrasonicate for 30 minutes, heat under reflux for 3 hours, cool, weigh again, replenish the loss weight with each ethanol. Allow to stand and use the supernatant as the test solution.

Procedure Exactly inject 5 μl of each of the reference solution and test solution into the column, respectively, determine and calculate the content.

It contains not less than 15 mg of baicalin ($C_{21}H_{18}O_{11}$) per big honeyed pill, and 3.5 mg per germ for watered pills, referred to Radix Scutellariae.

Action To clear *heat* and purge *fire*, and disperse *wind* and kill pain.

Indications Headache, dizziness, bloodshot eyes, tinnitus, sore throat, or sores on the mouth and tongue, swollen painful gums and constipation due to abundant *heat* in the interior and upward attacking by *wind-fire*.

Usage and dosage 1 big honeyed pill or 3 g watered pills, twice a day.

Precaution Be cautious about pregnant women.

Strength (1) 3 g per 16 watered pills
(2) 6 g per big honeyed pill

Storage Preserve in tightly closed containers.

Niuhuang Xiaoyan Pian (牛黄消炎片)

Niuhuang Xiaoyan Tablets

Ingredients Calculus Bovis Artifactus 4.8 g; Concha Margaritifera Usta 9.6 g; Venenum Bufonis 2.9 g; Indigo Naturalis 3.8 g; Radix Trichosanthis 9.6 g; Radix et Rhizoma Rhei 9.6 g; Realgar 9.6 g.

Procedure Levigate Realgar to very fine powder. Pulverize Concha Margaritifera Usta to very fine powder, pulverize Radix et Rhizoma Rhei and Radix Trichosanthis to fine powder, grind Indigo Naturalis to fine powder. Triturate Venenum Bufonis with alcohol to a paste, mix well with the above powders and a quantity of adjuvant, make granules, and dry. Grind Calculus Bovis Artifactus to fine powder, add it to the above granules, mix well, make to 1000 tablets, and coat with sugar or film.

Description Sugar coated or film coated tablets with yellowish-

browm core; taste, bitter, with numb and acrid feelings.

Identification (1) Microscopical: Stone cells yellowish-green, rectangular, elliptical, subsquare, polygonal or fusiform, 27-72 μm in diameter, wall relatively thickened, with fine and dense pits. Clusters of calcium oxalate large, 60-140 μm in diameter. Irregular pieces or granules blue. Irregular pieces golden-yellow or orange-yellow, lustrous.
(2) Grind 10 tablets, removal of coat, to fine powder, shake with 5 ml of methanol for 30 minutes, filter and use the filtrate as the test solution. Prepare a solution of 0.3 g of Radix et Rhizoma Rhei reference drug in the same manner as the reference drug solution. Dissolve indirubin CRS in chloroform to prepare a solution containing 0.2 mg per ml as the reference solution. Carry out the method for thin layer chromatography (Appendix VI B), using silica gel G as the coating substance and a mixture of petroleum ether (30-60℃), ethyl formate and formic acid (15 : 5 : 1) as the mobile phase. Apply separately 5-7 μl of each of the three solutions to the plate. After developing and removal of the plate, dry in air. The spot in the chromatogram obtained with the test solution corresponds in position and colour to the spot in the chromatogram obtained with the indirubin reference solution. Examine under ultraviolet light at 365 nm, the fluorescent spots in chromatogram obtained with the test solution correspond in position and colour to the fluorescent spots in the chromatogram obtained with the Radix et Rhizoma Rhei reference drug solution.
(3) Dissolve cholic acid CRS in ethanol to prepare a solution containing 0.5 mg per ml as the reference solution. Carry out the method for thin layer chromatography (Appendix VI B), using silica gel G as the coating substance and a mixture of isooctane, ethyl acetate and glacial acetic acid (15 : 7 : 5) as the mobile phase. Apply separately 5 μl of each of the test solution obtained under Identification test (1) and the reference solution to the plate. After developing and removal of the plate, and dry in air. Spray with 10% sulfuric acid in ethanol, heat at 105 ℃ to the spost clear, and examine under ultraviolet light at 365 nm. The fluorescent spot in chromatogram obtained with the test solution corresponds in position and colour to the fluorescent spot in the chromatogram obtained with the reference solution.

Other requirements Comply with the general requirements for pills (Appendix I D).

Assay Carry out the method for high performance liquid chromatography (Appendix VI D).

Chromatographic system and system suitability Use octadecylsilane bonded silica gel as the stationary phase and a mixture of acetonitrile and 0.5% potassium dihydrogen phosphate (adjust to pH 3.2 with phosphoric acid) (50 : 50) as the mobile phase. As detector a spectrophotometer set at 296 nm. The number of theoretical plates of the column is not less than 4000, calculated with reference to the peak of cinobufagin.

Reference solution Dissolve a quantity of cinobufagin CRS and bufogenin CRS, accurately weighed, in methanol to produce a mixture solution containing 50 μg each per ml as the reference solution.

Test solution Weigh accurately 20 tablets, with coating removed, grind to fine powder, weigh accurately a quantity, equal to 10 tablets, in a stopper conical flask, add accurately 25 ml of methanol, stopper tightly, weigh, shake well, allow to stand overnight, ultrasonicate (power 250 W, frequency 50 kHz) for 20 minutes, cool, weigh again, replenish the loss of weight with methanol, shake well, filter and use the successive filtrate as the test solution.

Procedure Inject accurately 10 μl of each of the reference solution and the test solution into the column, repectively, and calculate the content.
It contains not less than 0.10 mg of the total amount of cinobufagin ($C_{26}H_{34}O_6$) and bufogenin ($C_{24}H_{32}O_4$) per tablet, referred to Venenum Bufonis.

Action To clear *heat* and *toxicity*, reduce swelling and pain.

Indications Sore throat, furuncles and carbuncles due to accumulated *heat* in the interior.

Usage and dosage 1 tablet, 3 times a day, appropriate reduction of the dosage for children. For external use, ground to powder and applied topically.

Precaution Contraindicated for pregnant women.

Storage Preserve in tightly closed containers.

Niuhuang Zhenjing Wan
(牛黄镇惊丸)

Niuhuang Zhenjing Pills

Ingredients Calculus Bovis 80 g; Scorpio 300 g; Bombyx Batryticatus (stir-baked) 100 g; Margarita 100 g; Moschus 40 g; Cinnabaris 100 g; Realgar 100 g; Rhizoma Gastrodiae 200 g; Ramulus Uncariae cum Uncis 100 g; Radix Saposhnikoviae 200 g; Succinum 60 g; Arisaema cum Bile 100 g; Rhizoma Typhonii (processed) 100 g; Rhizoma Pinelliae (processed) 100 g; Concretio Silicea Bambusae 100 g; Borneolum Syntheticum 40 g; Herba Menthae 100 g; Radix et Rhizoma Glycyrrhizae 400 g.

Procedure Levigate Realgar, Cinnabaris and Margarita to very fine powder separately. Pulverize Scor-pio, Bombyx Batryticatus, Rhizoma Gastrodiae, Ramulus Uncariae cum Uncis, Radix Saposhnikoviae, Succinum, Arisaema cum Bile, Rhizoma Typhonii, Rhizoma Pinelliae, Concretio Silicea Bambusae, Herba Menthae and Radix et Rhizoma Glycyrrhizae to fine powder. Triturate Calculus Bovis, Moschus and Borneolum Syntheticum with the above powders, sift and mix well. To each 100 g of the powder add 35-50 g of refined honey and a quantity of water to make pills and dry at a lower temperature; alternatively, add 110-140 g of refined honey to make small honeyed pills or big honeyed pills.

Description Yellowish-brown water-honeyed pills, small honeyed pills or big honeyed pills; odour, slightly aromatic; taste, sweet, slightly cool and bitter.

Identification (1) Microscopical: Sclerenchymatous cells polygonal or elongated polygonal, 70-180 μm in diameter, with slightly lignified and relatively thickened walls, and distinct pits. Vittae containing golden-yellow secretion, about 30 μm in diameter. Sand crystals of calcium oxalate occurring in parenchymatous cells, sometimes crystal cells connected in rows. Fibre bundles surrounded by parenchymatous cells containing prisms of calcium oxalate, forming crystal fibres. Glandular scales with a 8-celled head, oblate, up to 90 μm in diameter, and a unicellular short stalk. Irregular pieces colourless or pale green, translucent, lustrous, sometimes with fine and dense sinuous striations. Irregular pieces pale yellowish-green or brownish-yellow, transparent or translucent. Irregular pieces golden-yellow or orange-yellow, lustrous. Irregular minute granules dark brownish-red, lustrous, with dark black edge. Fragments of body walls colourless, with minute hyphae. Fragments of body walls pale yellow to yellow, with reticulate striations and rounded alveoli, sometimes showing brown setae.
(2) Grind well 8 g of small honeyed pills or big honeyed

pills, cut into pieces, with 5 g of kieselguhr, or pulverize 5 g of the water-honeyed pills, add 25 ml of chloroform, ultrasonicate for 30 minutes, filter and keep the residue for latter use. Evaporate filtrate to dryness, and dissolve the residue in 1 ml of ethyl acetate as the test solution. Dissolve a mixture of (±)-borneol and (±)-isoborneol CRS in ethyl acetate to produce a solution containing 1 mg per ml as the reference solution. Carry out the method for thin layer chromatography (Appendix Ⅵ B), using silica gel G mixed with sodium carboxymethylcellulose as the coating substance and a mixture of cyclohexane and ethyl acetate (17 : 3) as the mobile phase. Apply separately 4 μl of each of the two solutions to the plate. After developing and removal of the plate, dry in air. Spray with 5% vanillin in sulfuric acid. The spot in the chromatogram obtained with the test solution corresponds in position and colour to the spot in the chromatogram obtained with the reference solution.

(3) Expel solvent remained in the residue, obtained under the test for Identification (2), add 50 ml of 7% sulfuric acid in 45% ethanol, heat under reflux for 1 hour, cool, and filter. Evaporate the ethanol from the filtrate, extract under shaking with three 10-ml quantities of petroleum ether (30-60℃), combine the petroleum ether extracts, and evaporate to dryness. Dissolve the residue in 0.5 ml of dehydrated ethanol as the test solution. Dissolve glycyrrhetinic acid in dehydrated ethanol to produce a solution containing 1 mg per ml as the reference solution. Carry out the method for thin layer chromatography (Appendix Ⅵ B), using silica gel GF_{254} mixed with sodium carboxymethylcellulose as the coating substance and a mixture of petroleum ether (60-90℃), benzene, ethyl acetate, and glacial acetic acid (10 : 20 : 7 : 0.5) as the mobile phase. Apply separately 5 μl of each of the two solutions to the plate. After developing and removal of the plate, dry in air. Examine under ultraviolet light at 254 nm. The spot in the chromatogram obtained with the test solution corresponds in position and colour to the spot in the chromatogram obtained with the reference solution.

Other requirements Comply with the general requirements for pills (Appendix Ⅰ A).

Action To relieve convulsion and anchor the mind, and expel *wind* and eliminate *phlegm*.

Indications Child convulsion with manifestations of convulsion, high fever, lockjaw and restlessness.

Usage and dosage 1 g of water-honeyed pills, 1.5 g of small honeyed pills or 1 big honeyed pill, 1-3 times a day; appropriate reduction of the dosage for children under 3 years of age.

Strength 1.5 g per big honeyed pill

Storage Preserve in tightly closed containers.

Niuhuang Zhibao Wan
(牛黄至宝丸)

Niuhuang Zhibao Pills

Ingredients Fructus Forsythiae 120 g; Fructus Gardeniae 120 g; Radix et Rhizoma Rhei 60 g; Natrii Sulfas 60 g; Gypsum Fibrosum 60 g; Herba Artemisiae Annuae 60 g; Pericarpium Citri Reticulatae 60 g; Radix Aucklandiae 45 g; Herba Pogostemonis 75 g; Calculus Bovis Artifactus 5 g; Borneolum Syntheticum 10 g; Realgar 15 g.

Procedure Levigate Realgar to very fine powder; grind Calculus Bovis Artifactus and Borneolum Syntheticum to fine powder respectively. Pulverize the other nine ingredients to fine powder, triturate with the powders of Calculus Bovis Artifactus, Borneolum Syntheticum, and Realgar, sift, and mix well. To 100 g of the powder add 145-150 g of refined honey to make big honeyed pills.

Description Pale brownish-yellow big honeyed pills; odour, slightly aromatic; taste, bitter and pungent.

Identification (1) Microscopical: Prisms of calcium oxalate clustered in parenchyma. Clusters of calcium oxalate large, 60-140 μm in diameter. Nonglandular hairs 1 ~ 6-celled, walls warted. Irregular species golden-yellow or orange-yellow, lustrous. Fibres of endocarp with the up and low layers arranged in crisscross, fibres short fusiform. Stone cells of testa yellow or pale brown, mostly broken, the whole ones long polygonal, rectangular or irregular, walls thickened, with large rounded pits, lumina brownish-red.

(2) Cut 6 g to pieces, ultrasonicate with 25 ml of chloroform for 30 minutes, filter, evaporate the filtrate to dryness, and dissolve the residue in 1 ml of methanol as the test solution. Dissolve Cholic acid CRS in methanol to prepare a solution containing 0.5 mg per ml as the reference solution. Carry out the method for thin layer chromatography (Appendix Ⅵ B), using silica gel G as the coating substance and the upper layer of a mixture of hexane, ethyl acetate, methanol, and acetic acid (20 : 25 : 3 : 2) as the mobile phase. Apply separately 10 μl of the test solution and 2 μl of the reference solution to the plate. After developing and removal of the plate, spray with 10% sulfuric acid in ethanol, heat at 105 ℃ for 10 minutes, and examine under ultraviolet light at 365 nm. The fluorescent spot in chromatogram obtained with the test solution corresponds in position and colour to the fluorescent spot in the chromatogram obtained with the reference solution.

(3) Take 0.2 g of Radix et Rhizoma Rhei, ultrasonicate with 20 ml of chloroform for 30 minutes, filter, evaporate the filtrate to dryness, and dissolve the residue in 1 ml of methanol as the reference drug solution. Dissolve emodin CRS and chrysophanol CRS in methanol to produce a solution containing 1 mg of each per ml as the reference solution. Carry out the method for thin layer chromatography (Appendix Ⅵ B), using silica gel G mixed with sodium carboxymethylcellulose as the coating substance and the upper layer of a mixture of hexane, ethyl acetate and formic acid (30 : 10 : 0.5) as the mobile phase. Apply separately 5 μl of each of the test solution obtained under Identification test (2), the reference drug solution and the reference solution to the plate. After developing and removal of the plate, examine under ultraviolet light at 365 nm. The orange-yellow fluorescent spots in chromatogram obtained with the test solution correspond in position and colour to the spots in the chromatograms obtained with the reference drug solution and the reference solution. Expose the plate to ammonia vapour, the colour of the spots turn red.

(4) Take 0.5 g of Radix Aucklandia reference drug, shake with 20 ml of ether for 15 minutes, filter, evaporate the filtrate to 4 ml, and use it as the reference drug solution. Carry out the method for thin layer chromatography (Appendix Ⅵ B), using silica gel G as the coating substance and a mixture of chloroform and cyclohexane (5 : 1) as the mobile phase. Apply separately to the plate 2 μl of each of the test solution obtained under Identification test (2) and the reference drug solution. After developing and removal of the plate, spray with 5% vanillin in sulfuric acid, heat at 105℃ for about 5 minutes. The spots in chromatogram obtained with the test solution correspond in position and colour to the spots in the chromatogram obtained with the reference drug solution.

Other requirements Comply with the general requirements for pills (Appendix Ⅰ A).

Assay Carry out the method for high performance liquid chromatography (Appendix Ⅵ D).

Chromatographic system and system suitability Use octadecylsilane bonded silica gel as the stationary phase and a mixture of acetonitrile, water and phosphoric acid (14 : 86 : 0.05) as the mobile phase. As detector a spectrophotometer set at 239 nm. Maintain the column temperature at 40℃. The number of theoretical plates of the column is not less than 4000, calculated with the reference to the peak of geniposide.

Reference solution Dissolve a quantity of geniposide CRS, accurately weighed, in methanol to prepare a solution containing 20 μg per ml as the reference solution.

Test solution Cut the pills, obtained under the test of weight variation, into pieces, weigh accurately 3 g, add accurately 3 g of kieselguhr, and triturate well. Weigh accurately 1 g of the powder in a stopper conical flask, add accurately 50 ml of methanol, stopper tightly and weigh. Ultrasonicate (power 100 W, frequency 40 kHz) for 30 minutes, cool, weigh again, replenish the loss of weight with methanol, and shake well. Filter and use the successive filtrate as the test solution.

Procedure Inject accurately 10 μl of each of the reference solution and the test solution into the column, respectively, and calculate the content.
It contains not less than 8.0 mg of geniposide ($C_{17}H_{24}O_{10}$) per pill, referred to Fructus Gardeniae.

Action To clear *heat* and *toxicity*, and purge *fire* and relax bowels.

Indications Headache, dizziness, bloodshot eyes, tinnitus, dry mouth and throat and constipation due to accumulated *heat* in the stomach and intestines.

Usage and dosage 1-2 pills, twice a day.

Precaution Contraindicated for pregnant women.

Strength 6 g per pill

Storage Preserve in tightly closed containers.

Nuanqi Gao
(暖脐膏)

Nuanqi Plaster

Ingredients Radix Angelicae Sinensis 80 g; Radix Angelicae Dahuricae 80 g; Radix Linderae 80 g; Fructus Foeniculi 80 g; Fructus Anisi Stellati 80 g; Radix Aucklandiae 40 g; Rhizoma Cyperi 80 g; Olibanum 20 g; Fructus Caryophylli 20 g; Myrrha 20 g; Cortex Cinnamomi 20 g; Lignum Aquilariae Resinatum 20 g; Moschus 3 g.

Procedure Pulverize Olibanum, Fructus Caryophylli, Myrrha, Cortex Cinnamomi, and Lignum Aquilariae Resinatum to fine powder, triturate with Moschus, sift, mix well. Break Radix Angelicae Sinensis and other 6 ingredients, deep-fry with 4800 g of edible vegetable oil, discard the residue, filter, concentrate the oily filtrate until it condenses to pills on dripping. Add 1500-2100 g of Plumbi Oxydum Flavum to the above oil, stir well to make plaster, and soak the plaster in water. Melt the plaster by gentle heat, add the above powder, stir-well, divide and spread on paper or cloth.

Description A black plaster spread on paper or cloth.

Other requirements Complies with the general requirements for plasters (Appendix Ⅰ P).

Action To warm the interior to disperse *cold*, and promote *qi* flow to kill pain.

Indications Cold pain in the lower abdomen, fullness in the stomach and abdomen and loose stools due to accumulation of *cold* and stagnation of *qi*.

Usage and dosage Soften the plaster by heat and stick it over the umbilicus.

Precaution Contraindicated for pregnant women.

Strength Net weight per piece (1) 3 g (2) 15 g (3) 30 g

Storage Preserve in well closed containers, stored in a cool, shady and dry place.

Nüjin Wan
(女金丸)

Nüjin Pills

Ingredients Radix Angelicae Sinensis 140 g; Radix Paeoniae Alba 70 g; Rhizoma Chuanxiong 70 g; Radix Rehmanniae Praeparata 70 g; Radix Codonopsis 55 g; Rhizoma Atractylodis Macrocephalae (stir-baked) 70 g; Poria 70 g; Radix et Rhizoma Glycyrrhizae 70 g; Cortex Cinnamomi 70 g; Herba Leonuri 200 g; Cortex Moutan 70 g; Myrrha (processed) 70 g; Rhizoma Corydalis (processed with vinegar) 70 g; Rhizoma et Radix Ligustici 70 g; Radix Angelicae Dahuricae 70 g; Radix Scutellariae 70 g; Radix et Rhizoma Cynanchi Atrati 70 g; Rhizoma Cyperi (processed with vinegar) 150 g; Fructus Amomi 50 g; Pericarpium Citri Reticulatae 140 g; Halloysitum Rubrum (calcined) 70 g; Cornu Cervi Degelatinatum 150 g; Colla Corii Asini 70 g.

Procedure Pulverize the above twenty-three ingredients to fine powder, sift and mix well. To each 100 g of the powder add 35-50 g of refined honey and a quantity water to make water-honeyed pills; alternatively, add 120-150 g of refined honey to make big honeyed pills.

Description Brown to blackish-brown big honeyed pills; odour, aromatic; taste, sweet and slightly bitter.

Identification (1) Microscopical: Compound starch granules consisting of 8-12 components. Gelatinized starch masses pale yellow. Irregularly branched masses colourless, dissolved in chloral hydrate TS, hyphae colourless or pale brown, 4-6 μm in diameter. Irregular transparent pieces slight yellow, with rounded pits and minute pores, and secreted oily droplets dissolved on long standing. Cork cells yellowish-brown, with slight sinuous thin walls overlapped in many layers. Cork cells reddish to slight purple, with slightly thickened walls. Needle crystals of calcium oxalate fine, 10-32 μm long, irregularly filling in parenchymatous cells. Prisms of calcium oxalate abundant in parenchyma. Stone cells subrounded or subrectangular, walls thin on one side. Sclerenchymatous cells of endotesta yellowish-brown or brownish-red, subpolygonal in surface view, with thickened walls, lumina containing silica bodies. Fibre bundles surrounded by parenchymatous cells containing prisms of calcium oxalate, forming crystal fibers. Bast fibres pale yellow, fusiform, with thickened walls and minute pit-canals. Fibres in bundles, dark brown or reddish-brown, with thickened walls. Parenchyma greyish-brown to blackish-brown, cells mostly shrunken, and each containing a brown nucleus-like mass. Parenchymatous cells spindle-shaped, with slightly thickened walls and very fine oblique crisscross striations. Irregular pieces translucent, strongly refractive on edge, with short fine striations, small openings and fine slits.
(2) Triturate well 2 big honeyed pills (or 10 g of water-honeyed pills) with 8 g of kieselguhr, grind and mix well, add 50 ml of ether, reflux for 1 hour, and filter. Wash the residue with 20 ml of ether, Keep the residue for later use,

and combine the filtrates. Evaporate the ether at a lower temperature, and dissolve the residue in 1 ml of ethanol as the test solution. Dissolve paeonol CRS in ethanol to produce a solution containing 2 mg per ml as the reference solution. Carry out the method for thin layer chromatography (Appendix Ⅵ B), using silica gel G as the coating substance and cyclohexane and ethyl acetate (3 : 1) as the mobile phase. Apply separately 15 μl of the test solution and 5 μl of the reference solution to the plate. After developing and removal of the plate, dry in air. Spray with 2% ferric chloride in ethanol acidified by hydrochloric acid, and heat to the spots clear. The spot in the chromatogram obtained with the test solution corresponds in position and colour to the spot in the chromatogram obtained with the reference solution.

(3) Dissolve cinnamaldehyde CRS in ethanol to produce a solution containing 2 μl per ml as the reference solution. Carry out the method for thin layer chromatography (Appendix Ⅵ B), using silica gel G as the coating substance and benzene as the mobile phase. Apply separately 5 μl of the test solution obtained under the test of Identification (2) and 2 μl of the reference solution to the plate. After developing and removal of the plate, dry in air. Spray with a solution of alcohdic dinitrophenyldrazine TS. The spot in the chromatogram obtained with the test solution corresponds in position and colour to the spot in the chromatogram obtained with the reference solution.

(4) Add 50 ml of methanol to the residue, evaporating the ether, obtained under the test of Identification (2), ultrasonicate for 30 minutes, filter, evaporate the filtrate to dryness, add a quantity of water, transfer to a colume (1.5 cm in internal diameter, 20 cm long), packed with D101 largeporous absorbent resin (successively pre-eluted with 50 ml of acetone, ethanol and water respectively), elute with 80 ml of water, evaporate the eluate to dryness, dissolve the residue in 2 ml of methanol and filter, using the filtrate as the test solution. Dissolve baicalin CRS in methanol to produce a solution containing 1 mg per ml as the reference solution. Carry out the method for thin layer chromatography (Appendix Ⅵ B), using silica gel G as the coating substance and *n*-butanol, glacial acetic acid, and water (7 : 1 : 2) as the mobile phase. Apply separately to the plate 4 μl of each of the two solutions. After developing and removal of the plate, dry in air. Spray with 2% ferric chloride in ethanol. The spot in the chromatogram obtained with the test solution corresponds in position and colour to the spot in the chromatogram obtained with the reference solution.

Other requirements Comply with the general requirements for pills (Appendix Ⅰ A).

Action To replenish *qi* and nourish blood, regulate the flow of *qi* and promote blood circulation to kill pain.

Indications Menstrual disorders due to a deficiency and stagnation of *qi* and blood, with manifestations of preceded or delayed menstrual cycle, menorrhagia, lassitude, persistent dribbling of menstrual blood and dysmenorrhea.

Usage and dosage 5 g of the water-honeyed pills, or 1 big honeyed pill, twice a day.

Precaution Be cautious about pregnant women.

Strength 9 g per big honeyed pill

Storage Preserve in tightly closed containers.

Paishi Keli
(排石颗粒)

Paishi Granules

Ingredients Herba Glechomae; Semen Plantaginis (stir-baked with salt water); Caulis Aristolochiae Manshuriensis; Radix Cynanchi Paniculati; Folium Pyrrosiae; Herba Dianthi; Caulis Lonicerae; Talcum; Semen Abutili; Radix et Rhizoma Glycyrrhizae.

Procedure Decoct 156 g of Herba Glechomae with water for 2 times, 3 hours and 2 hours respectively, combine the decoctions, filter and concentrate the filtrate to a thick extract with a relative density of 1.20 (50℃). Decoct the surplus Herba Glechomae and other nine ingredients with water for 2 times, 3 hours for the first time and 2 hours for the second, combine the decoctions, filter, concentrate the filtrate to a *thin* extract with a relative density of 1.24 (50℃), stand to cool, add a quantity of ethanol and stand. To the supernatant, recover ethanol and concentrate to a thick extract with a relative density of 1.20 (50℃). Mix thoroughly the above two extracts, dry by spraying, add a quantity of sucrose, make 1000 g granulas; or add a quantity of sucrose and other excipient, make 1000 g granulas; or add a quantity of dextrin, make granules and dry, make 250 g (without sucrose).

Description Yellowish-brown or brown granules; odour, slight; taste, sweet, slightly bitter; or grey or greyish-brown granules; taste, slightly sweet and slightly bitter (without sucrose granules).

Identification Pulverize 1 bag of the granules, add 50 ml of ethyl acetate, ultrasonicate for 30 minutes, filter, evaporate the filtrate to dryness and dissolve the residue with 0.5 ml of ethanol as the test solution. Dissolve ursolic acid CRS in dehydrated ethanol to produce a solution containing 0.5 mg per ml as the reference solution. Carry out the method for thin layer chromatography (Appendix Ⅵ B), using silica gel G as the coating substance and a mixture of toluene, ethyl acetate, and formic acid (24 : 10 : 1) as the mobile phase. Apply separately to the plate 5 μl of each of the above two solutions. After developing and removal of the plate, dry in air. Spray with 10% solution of sulfuric acid in ethanol, heat at 105℃ to visualize clearly. The spot in the chromatogram obtained with the test solution corresponds in position and colour to the spot in the chromatogram obtained with the reference solution.

Other requirements Comply with the general requirements for granules (Appendix Ⅰ C).

Assay *Reference solution* Weigh accurately 20 mg of rutin CRS, previously dried to constant weight at 120℃, in a 100 ml volumetric flask, dissolve in 50% methanol by shaking, dilute to the volume and mix well (containing 0.2 mg of dehydrated rutin per ml).

Standard calibration Measure accurately 1, 2, 3, 4 ml and 5 ml of the reference solution in 10 ml volumetric flasks separately, add 5 ml of 50% methanol and 0.3 ml of 5% sodium nitrite solution respectively, mix well, stand for 6 minutes. Add 0.3 ml of 10% solution of aluminum nitrate, mix well, stand for 6 minutes, add 4 ml of sodium hydroxide TS, dilute with 50% methanol to the volume and mix well. Carry out the method for ultraviolet spectrophtometry and colourimetry (Appendix Ⅴ A), measure the absorbency at the wavelength of 510 nm, perform the same reagents as the blank. Plot calibration curve, using absorbency as

ordinate and concentration as abscissa.

Procedure Weigh accurately 5 g or 1 g (without sucrose), obtained under the test of packing variation and pulverized to fine powder, in a stopper conical flask, add accurately 100 ml of methanol, stopper and weigh. Ultrasonicate (power, 250 W; frequency, 33 kHz) for 20 minutes, allow to cool, weigh and replenish the lost weight with methanol, shake thoroughly and filter. Measure accurately 25 ml of the successive filtrate in a 50 ml volumetric flask, dilute with water to the volume and mix well. Measure accurately 2 ml in a 10 ml volumetric flask, carry out the method described under the preparation of standard calibration, beginning at the word "add 5 ml of 50% methanol,...", measure accurately 2 ml of the filtrate in a 10 ml volumetric flask, dilute with 50% methanol to the volume and mix well as the blank. Measure the absorbance and read out the weight of dehydrated rutin in the test solution from standard calibration curve and calculate.

It contains not less than 0.12 g of total flavone per bag. calculated as dehydrated rutin ($C_{27}H_{30}O_{16}$).

Action To clear *heat* and induce urination, and relieve stranguria and remove stones.

Indications Urolithic stranguria due to *damp-heat* in the *lower-energizer* with manifestations of lumbar and abdomenal pain, and dysuria or sometimes hematuria; stones in the urinary system with above symptoms.

Usage and dosage To be taken after dissolving in boiled water. 1 bag, 3 times a day, or follow doctor's advice.

Strength (1) 20 g per bag
(2) 5 g per bag (without sucrose)

Storage Preserve in well closed containers.

Pilulae Olei Rhododendri Daurici (满山红油胶丸, Manshanhongyou Jiaowan)

Daurian Rhododendron Oil Soft Capsules

Daurian Rhododendron Oil Soft Capsules are prepared from Oleum Rhododendri Daurici with a quantity of diluent.

Description Yellowish-brown soft capsules. Odour, characteristic and aromatic.

Identification (1) Steam distill a quantity of the capsules (equivalent to 1 ml of Oleum Rhododendri Daurici), the volatile oil complies with tests for Identification described under Oleum Rhododendri Daurici.

(2) Dissolve 0.5 g of the content in 25 ml of *n*-hexane, transfer 5 ml of the solution to a column (1 cm in diameter) packed with silica gel (120-150 meshs, packed with *n*-hexane, and apply 3 g of anhydrous sodium sulfate on the top of the silica gel). Elute firstly with 50 ml of *n*-hexane, discard the eluate, then elute with 50 ml mixture of *n*-hexane and ethyl acetate (50 : 1), and collect the eluate as the test solution. Dissolve farrerol CRS in *n*-hexane to produce a solution containing 0.5 mg per ml as the reference solution. Carry out the method for thin layer chromatography (Appendix Ⅵ B), using silica gel G as the coating substance and a mixture of *n*-hexane and ethyl acetate (14 : 1) as the mobile phase. Apply separately 10 μl of each of the reference solution and the test solution to the plate. After developing and removing the plate, dry in air. Spray with vanillin in sulfuric acid TS, heat at 105℃ to the spots clear. The spot in the chromatography obtained with the test solution corresponds in position and colour to the spot in the chromatography obtained with the reference solution.

Other requirements Comply with the general requirements for capsules (Appendix Ⅰ L).

Assay Carry out the method for determination of volatile oil (Appendix Ⅹ D, method 1), using 40 capsules, weigh accurately calculate the content of volatile oil with 0.940 as the relative density.

It contains not less than 90.0 per cent and not more than 110.0 per cent of the labelled amount of daurian rhododendron oil.

Action To stop coughing and expel *phlegm*.

Indications Coughing with expectoration of white *phlegm* due to invasion of the lung by *cold* and *phlegm*; acute and chronic bronchitis with above symptoms.

Usage and dosage 0.05-0.1 g, 2-3 times a day.

Strength (1) 0.05 g
(2) 0.1 g of Oleum Rhododendri Daurici per capsule

Storage Preserve in tightly closed containers.

Pilulae Siegesbeckiae (豨莶丸, Xixian Wan)

Siegesbeckia Pills

Siegesbeckia Pills are the honeyed pills prepared from Herba Siegesbeckiae.

Procedure Cut 1000 g of Herba Siegesbeckiae into pieces. Decoct 500 g of wide stems with water twice, each for 2 hours. Combine the decoctions and filter, concentrate the filtrate to a thick decoction. Infuse the other 500 g with 1000 g of yellow rice wine in a jar, stoppered well, heat on a water bath until the wine is absorbed completely and take out. Mix with the above thick decoction, dry, pulverize to fine powder, sift and mix thoroughly. To each 100 g of the powder, add 170-200 g of refined honey to make big honeyed pills.

Description Black big honeyed pills; odour, slight; taste, sweet, slightly bitter.

Other requirements Comply with the general requirments for pills (Appendix Ⅰ A).

Action To clear *heat* and eliminate *dampness*, and disperse *wind* and kill pain.

Indications Obstruction of *qi* and blood with pain due to retention of *wind-dampness*, and *heat* in meridians with manifestations of numbness of limbs, aching and weakness of the lower back and knees, weakness of tendons and bones and joint pain; hemiplegia, rubella, and sores due to *dampness*.

Usage and dosage 1 pill, 2-3 times a day.

Strength 9 g per pill

Storage Preserve in well closed containers.

Pinggan Shuluo Wan (平肝舒络丸)

Pinggan Shuluo Pills

Ingredients Radix Bupleuri 45 g; Pericarpium Citri Reticulatae Viride (stir-baked with vinegar) 30 g; Pericarpium Citri

Reticulatae 45 g; Fructus Citri Sarcodactylis 45 g; Radix Linderae 45 g; Rhizoma Cyperi (stir-baked with vinegar) 45 g; Radix Aucklandiae 45 g; Lignum Santali Albi 45 g; Flos Caryophylli 30 g; Lignum Aquilariae Resinatum 150 g; Herba Pogostemonis 45 g; Fructus Amomi 45 g; Fructus Amomi Rotundus 45 g; Cortex Magnoliae Officinalis (stir-baked with ginger juice) 45 g; Fructus Aurantii (removed from pulp and stir-baked with bran) 45 g; Rhizoma et Radix Notopterygii 45 g; Radix Angelicae Dahuricae 45 g; Radix Smilacis Sieboldi (stir-baked with wine) 45 g; Herba Asari 45 g; Fructus Chaenomelis 45 g; Radix Saposhnikoviae 45 g; Ramulus Uncariae cum Uncis 45 g; Bombyx Batryticatus (stir-baked with barn) 45 g; Arisaema cum Bile (stir-baked with wine) 75 g; Concretio Silicea Bambusae 30 g; Herba Taxilli 45 g; Radix Polygoni Multiflori (stir-baked with decoction of black soybean) 45 g; Radix Achyranthis Bidentatae 45 g; Radix Chuanxiong 30 g; Radix Rehmanniae Praeparata 45 g; Carapax et Plastrum Testudinis (scalded with sand and quenched with vinegar) 45 g; Rhizoma Corydalis (stir-baked with vinegar) 45 g; Olibanum (stir-baked with vinegar) 45 g; Myrrha (stir-baked with vinegar) 45 g; Rhizoma Bletillae 45 g; Radix Ginseng 45 g; Rhizoma Atractylodis Macrocephalae (stir-baked with bran) 45 g; Poria 45 g; Cortex Cinnamomi 30 g; Rhizoma Coptidis 45 g; Borneolum Syntheticum 45 g; Cinnabaris 150 g; Cornu Saigae Tataricae Powder 15 g.

Procedure Levigate Cinnabaris to very fine powder; triturate Borneolum Syntheticum to fine powder; pulverize the other ingredients, except Cornu Saigae Tataricae powder, to fine powder. Mix and triturate with the above powders, sift and mix thoroughly. To each 100 g of the powder add 140-160 g of refined honey to make big honeyed pills.

Description Brownish-red big honeyed pills; odour, cool and aromatic; taste, bitter and pungent.

Identification (1) Grind well 2 pills, cut into pieces, with 12 g of kieselguhr, add 50 ml of ether, heat under reflux for 30 minutes, and filter. Concentrate the filtrate to 1 ml as the test solution. Prepare a solution with 1 g Rhizoma Chuanxiong reference drug and 20 ml of ether as the reference drug solution in the same manner. Carry out the method for thin layer chromatography (Appendix Ⅵ B), using silica gel G as the coating substance and a mixture of *n*-hexane and ethyl acetate (9 : 1) as the mobile phase. Apply separately 5 μl of the test solution and 1-2 μl of the reference drug solution to the plate. After developing and removal of the plate, dry it in air. Examine under ultraviolet light (365 nm), the fluorescent spots in the chromatogram obtained with the test solution correspond in position and colour to the spots in the chromatogram obtained with the reference drug solution. (2) Expel the solvent remained in the drug residue, obtained in the test for Identification (1), add 40 ml of ethanol, heat under reflux for 30 minutes, and filter. Evaporate the filtrate to dryness, and dissolve the residue in 3 ml of methanol as the test solution. Prepare a solution of 0.1 g of Rhizoma Coptidis reference drug as the reference drug solution in the same manner. Carry out the method for thin layer chromatography (Appendix Ⅵ B), using silica gel G as the coating substance and a mixture of *n*-butanol, glacial acetic acid, and water (7 : 1 : 2) as the mobile phase. Apply separately 5 μl of the test solution and 1 μl of the reference drug solution to the plate. After developing and removal of the plate, dry in air. Examine under ultraviolet light at 365 nm, the fluorescent spots in the chromatogram obtained with the test solution correspond in position and colour to the spots in the chromatogram obtained with the reference drug solution.

Other requirements Comply with the general requirements for pills (Appendix Ⅰ A).

Action To pacify the *liver* and dredge meridians, and promote blood circulation and expel *wind*.

Indications Stuffiness and pain in the chest and hypochondria, scurrying pain over the shoulder and back, numb hands and feet or muscular contracture due to stagnation of *liver-qi* and block of meridians.

Usage and dosage 1 pill, 2 times a day, taken with warm yellow wine or boiled water.

Strength 6 g per pill

Storage Preserve in tightly closed containers.

Qianbai Biyan Pian
(千柏鼻炎片)

Qianbai Biyan Tablets

Ingredients Herba Senecionis Scandentis 2424 g; Herba Selaginellae 404 g; Rhizoma et Radix Notopterygii 16 g; Semen Cassiae 242 g; Herba Ephedrae 81 g; Rhizoma Chuanxiong 8 g; Radix Angelicae Dahuricae 8 g.

Procedure Pulverize Rhizoma et Radix Notopterygii, Rhizoma Chuanxiong and Radix Angelicae Dahuricae to fine powder. Decoct the other 4 ingredients with water twice, combine the decoctions, filter and concentrate to a thick extract. Add the above fine powder of Rhizoma et Radix Notopterygii and Rhizoma Chuanxiong, mix thoroughly, dry, pulverize to fine power, make granules, press into 1000 tablets and coat with sugar.

Description Sugar coated tablets with brownish-black core; taste, bitter.

Identification (1) To 20 tablets, removed the sugar coats and grind finely, add 35 ml of ethanol, heat under reflux for 1 hour, and filter. Evaporate 15 ml of the filtrate to dryness, and dissolve in 2 ml of ethanol as the test solution. To 25 g of Herba Senecionis Scandentis reference drug, decoct with water for 1 hour, and filter. Concentrate the filtrate, add 40 ml of ethanol to produce a solution as the reference drug solution in the same manner. Carry out the method for thin layer chromatography (Appendix Ⅵ B), using silica gel G as the coating substance and a mixture of toluene, ethyl acetate and formic acid (5∶4∶1) as the mobile phase. Apply separately to the plate 3 μl of each of the two solutions. After developing and removal of the plate, dry in air. Spray with ferric chloride TS. The spots in the chromatogram obtained with the test solution correspond in position and colour to the spots in the chromatogram obtained with the reference drug solution.

(2) To the remainder solution of ethanol, obtained under the Identification (1), evaporate to dryness, dissolve the residue in 10 ml of water, add 1 ml of hydrochloric acid, heat for 30 minutes, and cool immediately. Extract with two 20-ml quantities of ether, combine the ether extracts, and evaporate to dryness. Dissolve the residue in 1 ml of chloroform as the test solution. To 1 g of the Semen Cassiae reference drug, decoct with water for 1 hour, and filter. Evaporate the solution to dryness, and dissolve the residue in 10 ml of methanol. Prepare a solution in the same manner as the reference drug solution. Dissolve chrysophanol CRS in methanol to produce a reference solution containing 1 mg per ml. Carry out the method for thin layer chromatography (Appendix Ⅵ B), using silica gel H mixed with sodium carboxymethylcellulose as the coating substance and a mixture of petroleum ether (30-60 ℃), ethyl formate, and formic acid (15∶5∶1) as the mobile phase. Apply separately 10 μl of the test solution and 2 μl of each of the reference drug and reference solutions to the plate. After developing and removing the plate, dry in the air, and examine under ultraviolet light at 365 nm. The fluorescent spots in the chromatography obtained with the test solution correspond in position and colour to the spots in the chromatography obtained with the reference drug and the reference solution.

(3) To 20 tablets, removed the sugar coats and ground finely, add 1 ml of concentrated ammonia TS and 20 ml of chloroform, heat under reflux on a water bath for 1 hour, and filter. Evaporate the filtrate to dryness, and dissolve the residue in 1 ml of methanol as the test solution. Prepare a solution with 1 g of Herba Ephedrae reference drug in the same manner as the reference drug solution. Dissolve ephedrin hydrochloride CRS in methanol to produce a reference solution containing 1 mg per ml. Carry out the method for thin layer chromatography (Appendix Ⅵ B), using silica gel G as the coating substance and a mixture of chloroform, methanol, and concentrated ammonia TS (20∶5∶0.5) as the mobile phase. Apply separately to the plate 5-10 μl of the test solution, 5 μl of the reference drug solution, and 2 μl of the reference solution. After developing and removing the plate, dry in the air. Spray with the ninhydrin TS, and heat at 105℃ to the spots clear. The red spot in the chromatography obtained with the test solution corresponds in position and colour to the spots in the chromatography obtained with the reference drug solution and the reference solution.

Other requirements Comply with the general requirements for tablets (Appendix Ⅰ D).

Action To clear *heat* and *toxicity*, promote blood circulation and expel *wind*, disseminate *lung-qi* and free the orifices.

Indications Stuffy nose, itching nose, yellow-thick nasal discharge or hyposmia due to invasion of the *lung* by *wind-heat*, which transforms into *fire*, hampering normal flow of *qi* and blood; acute and chronic rhinitis, acute and chronic sinusitis with above symptoms.

Usage and dosage 3-4 tablets, 3 times a day.

Storage Preserve in tightly closed containers.

Qiangyang Baoshen Wan
(强阳保肾丸)

Qiangyang Baoshen Pills

Ingredients Herba Epimedii (proccessed) 36 g; Actinolitum (calcined and stir-baked with wine) 36 g; Herba Cistanches (processed with wine) 36 g; Semen Trigonellae (stir-baked with salt water) 48 g; Fructus Psoraleae (stir-baked with salt water) 48 g; Fructus Schisandrae Chinensis (processed with vinegar) 42 g; Semen Astragali Complanati 36 g; Fructus Cnidii 36 g; Fructus Rubi 48 g; Semen Allii Tuberosi 42 g; Semen Euryales (stir-baked with bran) 60 g; Cortex Cinnamomi 24 g; Fructus Foeniculi (stir-baked with salt water) 30 g; Poria 36 g; Radix Polygalae (processed with Radix Glycyrrhizae) 36 g.

Procedure Pulverize the above fifteen ingredients to fine powder, sift and mix thoroughly, make pills with water and dry. To each 1000 g of the pills coat with 111 g of talc powder for the inner layer and a mixture of 28 g of Cinnabaris powder and 111 g of talc powder for the outer layer, polish, and dry.

Description Pink and lustrous watered pills with greyish-black core; taste, slightly bitter.

Identification Microscopical: Irregular branched masses colourless, dissolved in chloral hydrate TS; hyphae colourless or pale brown, 4-6 μm in diameter. Starch granules mostly compound, subspheroidal, composed of numerous components, components minute, subpolygonal or polygonal, 1-5 μm in diameter. Palisade cells of testa pale brown or reddish-brown, subpolygonal in surface view, walls slightly thickened; lumina containing reddish-brown contents. Stone cells of epidermis of testa pale yellowish-brown, polygonal in surface view, walls thickened, with fine and dense pit-canals, lumina containing dark brown

contents. Non-glandular hairs unicellular, with thickened and lignified walls, scars stone cell in shape. Fibres single, long fusiform, 24-50 μm in diameter, with thickened and lignified walls.

Other requirements Comply with the general requirements for pills (Appendix I A).

Action To reinforce the kidney to support *yang*.

Indications Aching and weakness of the lower back and legs, lassitude, impotence and seminal emission due to a deficiency of *kidney-yang*.

Usage and dosage 6 g, 2 times a day.

Strength 6 g per 100 pills

Storage Preserve in well closed containers, protected from moisture.

Qianjin Zhidai Wan (Damiwan) (千金止带丸，大蜜丸)

Qianjin Zhidai Pills (big honeyed pills)

Ingredients Identical with Qianjin Zhidai Pills (Watered Pills).

Procedure Pulverize the above 17 ingredients to fine powder, sift and mix thoroughly. To each 100 g of the powder add 140-160 g of refined honey to make big honeyed pills.

Description Blackish-brown big honeyed pills. Odour, slightly aromatic; taste, sweet, astringent and slightly bitter.

Identification Comply with Identification test (1) as described under Qianjin Zhidai Wan (shuiwan).

Other requirements Comply with the general requirements for pills (Appendix I A).

Action To invigorate the spleen and kidney, and regulate menstruation and cure leukorrhagia.

Indications Menstrual disorders and morbid leukorrhea due to deficiency in the spleen and kidney, with manifestations of irregular menstrual cycles, menorrhagia or metrostaxis with pale red menstrual blood without clots, or leukorrhagia with thin white vaginal discharge, aching and weakness of the lower back and knees.

Usage and dosage 1 pill, 2 times a day.

Strength 9 g per pill

Storage Preserve in tightly closed containers.

Qianjin Zhidai Wan (Shuiwan) (千金止带丸，水丸)

Qianjin Zhidai Pills (Watered pills)

Ingredients Radix Codonopsis 50 g; Rhizoma Atractylodis Macrocephalae (stir-baked) 50 g; Radix Angelicae Sinensis 100 g; Radix Paeoniae Alba 50 g; Rhizoma Chuanxiong 100 g; Rhizoma Cyperi (processed with vinegar) 200 g; Radix Aucklandiae 50 g; Fructus Amomi 50 g; Fructus Foeniculi (stir-baked with salt) 50 g; Rhizoma Corydalis (processed with vinegar) 50 g; Cortex Eucommiae (stir-baked with salt) 50 g; Radix Dipsaci 50 g; Fructus Psoraleae (stir-baked with salt) 50 g; Flos Celosiae Cristatae 200 g; Indigo Naturalis 50 g; Cortex Ailanthi (stir-baked) 200 g; Concha Ostreae (calcined) 50 g.

Procedure Pulverize the above seventeen ingredients to fine powder, sift and mix thoroughly. Make pills with water and dry.

Description Greyish-black watered pills; odour, slightly aromatic; taste, astringent and slightly bitter.

Identification (1) Microscopical: Anastomosing laticiferous tubes 12-15 μm in diameter, containing minute granules. Secretory cells subrounded, containing pale yellowish-brown to reddish-brown secretion, surrounded by radially arranged cells. Palisade cells of testa pale brown or brownish-red, subpolygonal in surface view, with slightly thickened walls, lumina containing reddish-brown contents. Needle crystals of calcium oxalate fine, 10-32 μm long, irregularly filling in parenchymatous cells. Rubber threads strip-shaped or twisted into masses with granular surface. Stone cells subrounded or subpolygonal, lumina containing prisms of calcium oxalate. Sclerenchymatous cells of endotesta yellowish-brown or brownish-red, subpolygonal in surface view, with thickened walls, lumina containing silica bodies. Fragments of sclerenchyma greenish-yellow, cells subpolygonal or slightly elongated, with somewhat sinuous and sometimes beaded walls, showing minute and dense pits. Pollen grains spheroidal, up to about 37 μm in diameter, extine with minute warts and diffuse pores. Irregular pieces or granules blue in colour.

(2) Triturate well 10 g, add 100 ml of methanol, macerate warmly for 1 hour, shake constantly, and filter. Recover the filtrate to dryness, dissolve the residue in 30 ml of water, extract with three 30-ml quantities of ether with shaking, and discard the ether solution. Extract the water solution with three 30-ml quantities of *n*-butanol saturated with water. Combine the *n*-butanol extracts, wash with two 30-ml quantities of water saturated with *n*-butanol, and discard the water solution. Recover the *n*-butanol extracts to dryness, dissolve the residue in about 1 ml of ethanol, add a quantity of alumina, mix thoroughly on a water bath, dry, and apply to a column packed with neutral alumina (200-300-mesh, 1 g, 10-15 mm in diameter), and elute with 60 ml of methanol. Collect the eluate and recover it to dryness. Dissolve the residue in 1 ml of methanol as the test solution. Dissolve paeoniflorin CRS in ethanol to produce a solution containing about 2 mg per ml as the reference solution. Carry out the method for thin layer chromatography (Appendix VI B), using silica gel G as the coating substance and a mixture of chloroform, ethyl acetate, methanol, and formic acid (40∶5∶10∶0.2) as the mobile phase. Apply separately to the plate 4 μl of the test solution and 2 μl of the reference solution. After developing and removal of the plate, dry in air. Spray with 5% vanillin in sulfuric acid, and heat to visualize clearly. The spot in the chromatogram obtained with the test solution corresponds in position and colour to the spot in the chromatogram obtained with the reference solution.

(3) Triturate well 4 g, add 30 ml of methanol, ultrasonicate for 20 minutes, and filter. Evaporate the filtrate to dryness, dissolve the residue in 2 ml of ethyl acetate, and apply to a column (10-15 mm in diameter) packed with neutral alumina (100-200 mesh, 3 g). Elute with 10 ml of ethyl acetate, collect the eluate and evaporate to dryness, and dissolve the residue in 1 ml of ethyl acetate as the test solution. Dissolve psoralen, isopsoralen CRS, indirubin CRS, and indigotin CRS in chloroform to produce a mixture containing 1 mg of each per ml as the reference solution. Carry out the method for thin layer chromatography (Appendix VI B), using silica gel G as the coating substance and a mixture of n-hexane and ethyl acetate (4∶1) as the mobile phase. Apply separately to the plate 5 μl of the test solution, 2 μl of the reference drug solution, and 1 μl of the

reference solutions. After developing and removing the plate, dry in the air. The spots in the chromatogram obtained with the test solution correspond in position and colour to the spots of indirubin, and indigotin CRS in the chromatogram obtained with the reference solution; spray with 10% potassium hydroxide in methanol and examine under ultraviolet light at 365 nm, the fluorescent spots in the chromatogram obtained with the test solution correspond in position and colour to the spots of psoralen, isopsoralen CRS in chromatogram obtained with the reference solution.

Other requirements Comply with the general requirements for pills (Appendix Ⅰ A).

Assay Carry out the method for high performance liquid chromatography (Appendix Ⅵ D).

Chromatographic system and system suitability Use octadecylsilane bonded silica gel as the stationary phase and a mixture of acetonitrile and water (12∶88) as the mobile phase. As detector a spectrophotometer set at 230 nm. Maintain the column temperature at 40℃. The number of theoretical plates of the column is not less than 3000, calculated with the reference to the peak of paeoniflorin.

Reference solution Weigh accurately a quantity of paeoniflorin CRS, dissolve in methanol to produce the reference solution containing 20 μg per ml.

Test solution Pulverize the pills to fine powder, weigh accurately about 1 g in a stoppered conical flask, add accurately 25 ml of 30% ethanol solution, stopper, and weigh accurately. Ultrasonicate (power 100 W, frequency 40 kHz) for 30 minutes, cool, weigh accurately again, and replenish the lost weight with 30% solution of methanol. Mix well, filter with microporous film (0.45 μm), and use successive filtrate as the test solution.

Procedures Inject accurately 10 μl of the reference solution and 15 μl of the test solution into the column, respectively, and calculate the content.
It contains not less than 0.3 mg of paeoniflorin ($C_{23}H_{28}O_{11}$) per gram, referred to Radix Paeoniae Alba.

Action To invigorate the spleen and kidney, and regulate menstruation and cure leukorrhagia.

Indications Menstrual disorders and morbid leukorrhea due to deficiency in the spleen and kidney, with manifestations of irregular menstrual cycles, menorrhagia or metrostaxis with pale red menstrual blood without clots, or leukorrhagia with thin white vaginal discharge, aching and weakness of the lower back and knees.

Usage and dosage 6-9 g, 2-3 times a day.

Storage Preserve in well closed containers, protected from moisture.

Qianlieshu Wan
(前列舒丸)

Qianlieshu Pills

Ingredients Radix Rehmanniae Praeparata; Semen Coicis; Semen Benincasae; Fructus Corni; Rhizoma Dioscoreae; Cortex Moutan; Rhizoma Atractylodis; Semen Persicae; Rhizoma Alismatis; Poria; Ramulus Cinnamomi; Radix Aconiti Lateralis Praeparata; Semen Allii Tuberosi; Herba Epimedii; Radix et Rhizoma Glycyrrhizae.

Procedure Pulverize the above fifteen ingredients to fine powder, sift and mix thoroughly. To each 100 g of the powder, add 35-45 g of refined honey and a quantity of water to make water-honeyed pills and dry; or add 110-130 g of refined honey to make big honeyed pills.

Description Brownish-black water-honeyed pills or big honeyed pills; odour, slightly; taste, sweet and sour.

Identification (1) Microscopical: Irregular branched masses colourless, dissolved in chloral hydrate TS, hyphae colourless or pale brown, 4-6 μm in diameter. Starch granules deltoidovoid or oblong, 24-40 μm in diameter, hilum shortly cleft or V-shaped. Parenchyma greyish-brown to blackish-brown, cells mostly shrunken, each containing a brown nucleus-like mass. Clusters of calcium oxalate occurring in colourless parenchymatous cells, sometimes several crystal cells in one row. Epidermal cells of pericarp orange-yellow, subpolygonal in surface view, with beaded anticlinal walls. Parenchymatous cells subrounded, with elliptical pits gathered into pitted areas. Anticlinal walls of endodermal cells sinuous, relatively thickened, lignified, with sparse and fine pit-canals.
(2) Distill by steaming 10 g of the pills, collect 20 ml of the distillate. To 2 ml of the distillate, add a small quantity of a mixed powder of 1 portion of 2,6-dichloroquinone chlorimide and 32 portions of sodium tetraphenylborate, shake for 4-6 minutes, the solution shows a blue colour.
(3) To 10 g of the pills add 30 ml of water, stand for disintegration, and filter. Wash the residue with 20 ml of water, dry at room temperature, then heat to dryness at 100℃. Heat under reflux the residue in 50 ml of ethanol for 2 hours, filter, and concentrate the filtrate to 5 ml as the test solution. Dissolve ursolic acid CRS in dehydrated ethanol to produce a solution containing 0.5 mg per ml as the reference solution. Carry out the method for thin layer chromatography (Appendix Ⅵ B), using silica gel G as the coating substance and a mixture of cyclohexane, chloroform and ethyl acetate (20∶5∶7) as the mobile phase. Apply 10 μl of the test solution and 5 μl of the reference solution separately to the plate. After developing and removal of the plate, dry in air, spray with a mixture of acetic anhydride and sulfuric acid (9∶1), heat at 105℃ for about 5 minutes, take out immediately. The spot in the chromatogram obtained with the test solution corresponds in position and colour to the spot in the chromatogram obtained with the reference solution.

Other requirements Comply with the general requirements for pills (Appendix Ⅰ A).

Assay Grind well water-honeyed pills, or cut big honeyed pills, obtained under the test of weight variation, into pieces, weigh accurately 2 g, steam distill, collect 450 ml of the distillate in a 500 ml volumetric flask, and dilute with water to volume. Carry out the method for ultraviolet spectrophtometry and colourimetry (Appendix Ⅴ A), measure the absorbance at 274 nm, calculate, taking 862 as the value of A (1%, 1 cm).
It contains not less than 0.35 mg per gram of water-honeyed pills, 3.2 mg per big honeyed pill, of paeonol ($C_9H_{10}O_3$), referred to Cortex Moutan.

Action To support healthy *qi* to restore normal physiological functions, and invigorate the kidney to induce urination.

Indications Stranguria syndrome due to deficiency in the kidney, with manifestations of frequent, urgent urination and urine dribbling after urination; chronic prostatitis and hyperplasia of prostate with above symptoms.

Usage and dosage 6-12 g of water-honeyed pills, 1-2 big honeyed pills, 3 times a day, or follow doctor's advice.

Precaution Contraindicated for patients with retention of urine.

Strength 1.3 g per 10 water-honeyed pills, 9 g per big honeyed pills

Storage Preserve in tightly closed containers.

Qibao Meiran Keli
(七宝美髯颗粒)

Qibao Meiran Granules

Ingredients Radix Polygoni Multiflori Praeparata 128 g; Radix Angelicae Sinensis 32 g; Fructus Psoraleae (stir-baked with Semen Sesami Nigrum) 16 g; Fructus Lycii (steamed with wine) 32 g; Semen Cuscutae (stir-baked) 32 g; Poria 32 g; Radix Achyranthis Bidentatae (steamed with wine) 32 g.

Procedure Pulverize Semen Cuscutae to a coarse powder, carry out the method for percolation described under liquid extracts and extracts (Appendix Ⅰ O), using 60% ethanol as solvent to percolate, recover ethanol from the percolation and concentrate to a quantity; Decoct the other 6 ingredients with water twice, 3 hours for the first time and 2 hours for the second, combine the decoctions and stand. Separate the supernatant and concentrate to a quantity, add the above extract of Semen Cuscutae and stir thoroughly, concentrate to a thin extract with a relative density of 1.13-1.14 (measured by mixing with same quantity of water at 20℃). Take 1 portion of the liquid extract, 4.5 portions of powdered sucrose and 0.5 portion of dextrin, make to granules and dry, make 1000 g of granules.

Description Yellowish-brown granules; taste, sweet, slightly bitter and astringent.

Identification (1) To 10 g, finely powdered, add 20 ml of ethyl acetate and 0.5 ml of hydrochloric acid, ultrasonicate for 20 minutes, and filter. Evaporate the filtrate to dryness, and dissolve the residue in 0.5 ml of ethyl acetate as the test solution. Prepare a solution with 0.1 g of Radix polygoni Multiflori reference drug as the reference drug solution in the same manner. Dissolve emodin CRS in methanol to produce a solution containing 1 mg per ml as the reference solution. Carry out the method for thin layer chromatography (Appendix Ⅵ B), using silica gel G as the coating substance and the upper layer of toluene, ethyl acetate and formic acid (20∶2∶1) as the mobile phase. Apply separately 10 μl of the test solution, 2 μl of the reference drug solution and 1 μl of the reference solution to the plate. After developing and removal of the plate, dry in air, expose to ammonia vapour to the spots clear. The spots in the chromatogram obtained with the test solution correspond in position and colour to the spots in the chromatogram obtained with the reference drug solution and reference solution.

(2) Dissolve separately psoralen CRS and isopsoralen CRS in ethyl acetate to produce two solutions containing 2 mg per ml as the reference solutions. Carry out the method for thin layer chromatography (Appendix Ⅵ B), using silica gel G as the coating substance and a mixture of *n*-hexane and ethyl acetate (4∶1) as the mobile phase. Apply separately 5 μl of the test solution obtained under Identification test (2) and 1 μl of each of the above two reference solutions to the plate. After developing and removal of the plate, dry in air, spray with 10% potassium hydroxide in methanol, examine under ultraviolet light at 365 nm. The fluorescent spots in the chromatogram obtained with the test solution correspond in position and colour to the spots in the chromatogram obtained with the reference solutions.

(3) To 8 g of the granules, finely powdered, dissolve in 40 ml of water, extract by shaking with two 30-ml quantities of chloroform, combine the chloroform, evaporate to dryness, and dissolve the residue in 1 ml of methanol as the test solution. To 1 g of Fructus Lycii reference drug, decoct with 20 ml of water for 10 minutes, filter, and extract the filtrate with two 30-ml quantities of chloroform. Combine the chloroform extracts, evaporate to dryness, and dissolve the residue in 1 ml of methanol as the reference drug solution. Carry out the method for thin layer chromatography (Appendix Ⅵ B), using silica gel G as the coating substance and a mixture of toluene, ethyl acetate, and formic acid (15∶5∶2) as the mobile phase. Apply separately 5 μl of each of the reference drug solution and the test solution to the plate. After developing and removing the plate, dry in air. Examine under ultraviolet light at 365 nm. The fluorescent spot in the chromatography obtained with the test solution corresponds in position and colour to the spot in the chromatography obtained with the reference solution.

Other requirements Comply with the general requirements for medical granules (Appendix Ⅰ C).

Assay Carry out the method for high performance liquid chromatography (Appendix Ⅵ D).

Chromatographic system and system suitability Use octadecylsilane bonded silica gel as the stationary phase and a mixture of acetonitrile and water (18∶82) as the mobile phase. As detector a spectrophotometer set at 320 nm. The number of theoretical plates of the column is not less than 2000, calculated with the reference to the peak of 2,3,5,4′-tetrahydroxystilbene-2-*O*-β-D-glucoside.

Reference solution Weigh accurately a quantity of 2,3,5,4′-tetrahydroxystilbene-2-*O*-β-D-glucoside CRS, dissolve in methanol to produce the reference solution containing 30 μg per ml.

Test solution Pulverize the granules, obtained under the test of weight variation, to fine powder, weigh accurately 3 g, add accurately 25 ml of methanol, and weigh accurately. Heat under reflux for 30 minutes, cool, and weigh again. Supplement the methanol due to evaporating, mix well, filter, and use the filtrate as the test solution.

Procedure Inject accurately 10 μl of each of the reference solution and the test solution into the column, respectively, and calculate the content.

It contains not less than 1.5 mg of 2,3,5,4′-tetrahydroxystilbene-2-*O*-β-D-glucoside ($C_{20}H_{22}O_9$) per pack, referred to Radix Polygoni Multiflori Preparata.

Action To nourish the liver and kidney.

Indications Premature graying hair, seminal emission, premature ejaculation, dizziness and tinnitus, aching pain in the back and lower back due to deficiency in the liver and kidney.

Usage and dosage 8 g, 2 times a day, taken with boiled water.

Strength 8 g per pack

Storage Preserve in tightly closed containers.

Qiju Dihuang Wan
(杞菊地黄丸)

Qiju Dihuang Pills

Ingredients Fructus Lycii 40 g; Flos Chrysanthemi 40 g; Radix Rehmanniae Praeparata 160 g; Fructus Corni (processed) 80 g; Cortex Moutan 60 g; Rhizoma Dios-

coreae 80 g; Poria 60 g; Rhizoma Alismatis 60 g.

Procedure Pulverize the above eight ingredients to fine powder, sift and mix well. To each 100 g of the powder, add 35-50 g of refined honey and a quantity of water to make water-honeyed pills and dry; or add 80-110 g of refined honey to make small honeyed pills or big honeyed pills.

Description Brownish-black water-honeyed pills, blackish-brown small honeyed pills or big honeyed pills; taste, sweet and slightly sour.

Identification (1) Microscopical: Starch granules triangular-ovoid or oblong, 24-40 μm in diameter, hilum short cleft or V-shaped. Irregular branched masses colourless, dissolved in chloral hydrate TS; hyphae colourless or pale brown, 4-6 μm in diameter. Parenchyma greyish-brown to blackish-brown, cells mostly shrunken, and each containing a brown nucleus-like mass. Clusters of calcium oxalate occurring in colourless parenchymatous cells, sometimes several in rows. Epidermal cells of pericarp orange-yellow, subpolygonal in surface view, with beaded anticlinal walls. Parenchymatous cells subrounded, with elliptical pits gathered into pit groups. Anticlinal walls of endodermis cells sinuous, relatively thickened lignified with sparse and fine pit-canals. Stone cells of testa irregular subpolygonal in surface view, walls thickened, sinuous, striations well-defined. Pollen grains subrounded, 24-34 μm in diameter, extine with spinules of 3-5 μm long, and 3 germinal apertures.

(2) Triturate well 9 g of small or big honeyed pills, cut into pieces, with 4 g of kieselguhr; or grind 6 g of water-honeyed pill, and heat under reflux with 40 ml of ether for 1 hour, filter and expel ether from the filtrate. Dissolve the residue in 1 ml of acetone as the test solution. Dissolve paeonol CRS in acetone to produce a solution containing 1 mg per ml as the reference solution. Carry out the method for thin layer chromatography (Appendix Ⅵ B), using silica gel G as the coating substance and a mixture of cyclohexane and ethyl acetate (3∶1) as the mobile phase. Apply separately to the plate 10 μl of each of the two solutions in strip. After developing and removal of the plate, dry in air, spray with a 5% solution of ferric chloride in ethanol acidified by hydrochloric acid, and heat to the strips clear. The bluish-brown strip in the chromatogram obtained with the test solution corresponds in position and colour to the strip in the chromatogram obtained with the reference solution.

(3) Dissolve ursolic acid CRS in ethyl acetate to produce a solution containing 1 mg per ml as the reference solution. Carry out the method for thin layer chromatography (Appendix Ⅵ B), using silica gel G as the coating substance and a mixture of toluene, ethyl acetate and glacial acetic acid (24∶8∶1) as the mobile phase. Apply separately 5 μl of each of the test solution obtained under Identification test (2) and the reference solution to the plate. After developing and removal of the plate, dry in air, spray with 10% sulfuric acid in ethanol and heat at 105℃ for several minutes. The purplish-red spot in the chromatogram obtained with the test solution corresponds in position and colour to the spot in the chromatogram obtained with the reference solution.

(4) Grind well 9 g of water-honeyed pills; or cut 14 g of small or big honeyed pills to pieces. Add 100 ml of water, heat under reflux for 30 minutes, cool, centrifuge, and separate the supernatant. Extract with 50 ml of ethyl acetate by shaking, separate the ethyl acetate layer and evaporate to dryness. Dissolve the residue in 1 ml of methanol as the test solution. To 0.5 g of Fructus Lycii reference drug, add 50 ml of water, heat under reflux for 30 minutes, allow to cool, and centrifuge. Separate the supernatant, extract with 30 ml of ethyl acetate by shaking, separate the ethyl acetate layer and evaporate to dryness. Dissolve the residue in 1 ml of methanol as the reference drug solution. Carry out the method for thin layer chromatography (Appendix Ⅵ B), using silica gel G as the coating substance and the upper layer of a mixture of toluene, ethyl acetate and formic acid (15∶2∶1) as the mobile phase. Apply separately 10 μl of each of the two solutions to the plate. After developing and removal of the plate, dry in air, and examine under ultraviolet light at 365 nm. The fluorescent spots in the chromatogram obtained with the test solution correspond in position and colour to the spots in the chromatogram obtained with the reference drug solution.

Other requirements Comply with the general requirements for pills (Appendix Ⅰ A).

Assay ***Fructus Corni*** Carry out the method for high performance liquid chromatography (Appendix Ⅵ D).

Chromatographic system and system suitability Use octadecylsilane bonded silica gel as the stationary phase and a mixture of acetonitrile, methanol and 0.1% phosphoric acid (10∶5∶85) as the mobile phase. As detector a spectrophotometer set at 236 nm. The number of theoretical plates of the column is not less than 4000, calculated with the reference to the peak of loganin.

Reference solution Weigh accurately a quantity of loganin CRS, dissolve in 50% methanol to prepare a solution containing 40 μg per ml as the reference solution.

Test solution Pulverize the water-honeyed pills or small honeyed pills, or cut the big honeyed pills, obtained under the test of weight variation, into pieces, weigh accurately 1 g in a stopper conical flask, add accurately 25 ml of 50% methanol, stopper tightly and weigh. Heat under reflux for 1 hour, cool, weigh again, replenish the loss of weight with 50% methanol, shake well and filter. Apply accurately 10 ml of successive filtrate to a neutral alumina column (100-200 mesh, 4 g, 1 cm in diameter), elute with 50 ml of 40% methanol, collect the eluates, and evaporate to dryness. Dissolve the residue in 50% methanol and transfer accurately to a 5 ml volumetric flask, add 50% methanol to volume, and shake well. Filter and use the successive filtrate as the test solution.

Procedure Inject accurately 10 μl of each of the reference solution and the test solution into the column, respectively, and calculate the content.

It contains not less than 0.42 mg per gram of the water-honeyed pills, 0.30 mg per gram of the small honeyed pills, 2.7 mg per big honeyed pill, of loganin ($C_{17}H_{26}O_{10}$), referred to Fructus Corni.

Cortex Moutan Carry out the method for high performance liquid chromatography (Appendix Ⅵ D).

Chromatographic system and system suitability Use octadecylsilane bonded silica gel as the stationary phase and a mixture of methanol and water (70∶30) as the mobile phase. As detector a spectrophotometer set at 274 nm. The number of theoretical plates of the column is not less than 3500, calculated with the reference to the peak of paeonol.

Reference solution Weigh accurately a quantity of paeonol CRS, dissolve in 50% methanol to prepare a solution containing 40 μg per ml as the reference solution.

Test solution Pulverize the water-honeyed pills or small honeyed pills, or cut the big honeyed pills, obtained under the test of weight variation, into pieces, weigh accurately 0.5 g in a stopper conical flask, add accurately 50 ml of 70% methanol, stopper tightly and weigh. Ultrasonicate (power, 250 W; frequency, 33 kHz) for 45 minutes, cool, weigh again, replenish the loss of weight with 70% methanol, and shake well. Filter and use the successive filtrate as the test solution.

Procedure Inject accurately 10 μl of the reference solution and 20 μl of the test solution into the column, respectively, and calculate the content.
It contains not less than 0.80 mg per gram of the water-honeyed pills, 0.60 mg per gram of the small honeyed pills, 5.4 mg per big honeyed pill, of paeonol ($C_9H_{10}O_3$), referred to Cortex Moutan.

Action To nourish the kidney and liver.

Indications Dizziness, tinnitus, photophobia, dacryorrhea irritated by wind and blurred vision due to *yin* deficiency in the liver and kidney.

Usage and dosage 6 g of water-honeyed pills, 9 g of small honeyed pills or 1 big honeyed pill, twice a day.

Strength 9 g per big honeyed pill

Storage Preserve in tightly closed containers.

Qili San
(七厘散)

Qili Powder

Ingredients Sanguis Draconis 500 g; Olibanum (processed) 75 g; Myrrha (processed) 75 g; Flos Carthami 75 g; Catechu 120 g; Borneolum Syntheticum 6 g; Moschus 6 g; Cinnabaris 60 g.

Procedure Levigate Cinnabaris to very fine powder. Pulverize Sanguis Draconis, Olibanum, Myrrha, Flos Carthami and Catechu to fine powder. Triturate Moschus and Borneolum Syntheticum with the above powders, sift and mix thoroughly.

Description Vermilion to purplish-red powder or loose masses; odour, aromatic; taste, pungent, bitter and with cooling sensation.

Identification (1) Microscopical: Irregular pieces sanguineous, arounded with bright yellow liquid and turning gradually to red. Irregular masses colourless or pale yellow, with plenty of minute granules scattered on surface and around, dissolved on long standing Fragments of corolla yellow, with reddish-brown or yellowish-brown long tubular secretory cells. Pollen grains round or ellipsoidal, about 60 μm in diameter, extine with spinules and 3 germinal apertures. Irregular minute granules dark brownish-red, lustrous, and with dark black edges.
(2) To 0.2 g add 2 ml of ethanol, shake and filter. Place 5 drops of the filtrate on a white porcelain dish, add 3 drops of 1% hydrochloric acid solution and 2 ml of 0.5% solution of *p*-dimethyl amino benzaldehyde in ethanol. Heat on a water bath, a purple or purplish-red colour is produced around the solution.
(3) To 0.2 g add 5 ml of ether, stopper closely, shake for 10 minutes, filter and use the filtrate as the test solution. Prepare a solution with 0.1 g of Sanguis Draconis reference drug in the same manner as the reference drug solution. Carry out the method for thin layer chromatography (Appendix Ⅵ B), using silica gel G as the coating substance and a mixture of chloroform and methanol (19∶1) as the mobile phase. Apply separately to the plate 10 μl of each of the two solutions. After developing and removal of the plate, dry in air. The two spots in the chromatogram obtained with the test solution correspond in position and colour to the spots in the chromatogram obtained with the reference drug solution.

Other requirements Comply with the general requirements for powders (Appendix Ⅰ B).

Extractives To about 2 g, accurately weighed, carry out the hot extraction method under the determination of ethanol soluble extractives (Appendix Ⅹ A), using ethanol as the solvent. It contains not less than 60% of extractive.

Assay Carry out the method for high performance liquid chromatography (Appendix Ⅵ D).

Chromatographic system and system suitability Use octadecylsilane bonded silica gel as the stationary phase and a mixture of acetonitrile, 0.05 mol/L solution of sodium dihydrogen phosphate (50∶50) as the mobile phase. As detector a spectrophotometer set at 440 nm. Maintain the temperature of the column at 40℃. The number of theoretical plates of the column is not less than 4000, calculated with the reference to the peak of dracorhodin.

Reference solution Weigh accurately 9 mg of dracorhodin perchlorate CRS in a 50 ml amber volumetric flask, dissolve and dilute with 3% solution of phosphoric acid in methanol to volume and shake well. Measure accurately 1 ml to a 5 ml amber volumetric flask, dilute with methanol to the volume and shake well (containing 26 μg of dracorhodin per ml) (each mg of dracorhodin perchlorate is equivalent to 0.726 mg of dracorhodin).

Test solution Weigh accurately 0.10-0.15 g of the powder, obtained under the test of packing variation and ground to fine powder, in a 15 ml test tube with stopper, add accurately 10 ml of 3% solution of phosphoric acid in methanol, stopper well, shake for 3 minutes and filter. Measure accurately 1 ml of the successive filtrate in a 5 ml amber volumetric flask, dilute with methanol to volume and shake well.

Procedure Inject accurately 10 μl of each of the reference solution and the test solution into the column, respectively, and calculate the content.
It contains not less than 5.5 mg of dracorhodin ($C_{17}H_{14}O_3$) per gram, referred to Sanguis Draconis.

Action To resolve stagnant blood to reduce swelling, and kill pain and arrest bleeding.

Indications Injuries from fall or stumble, bruise and pain and traumatic hemorrhage.

Usage and dosage 1-1.5 g, 1-3 times a day; or mixed with liquid and applied topically.

Precaution Contraindicated for pregnant women.

Strength (1) 1.5 g (2) 3 g per bottle

Storage Preserve in tightly closed containers, store in a cool place.

Qinbaohong Zhike Pian
(芩暴红止咳片)

Qinbaohong Zhike Tablets

Ingredients Folium Rhododendri Daurici 1050 g; Cortex Syringae Amurensis 1050 g; Radix Scutellariae 500 g.

Procedure Decoct Radix Scutellariae with water for three times, 2 hours for the first time, and 1 hour each for the second and third time. Filter the decoction, combine the filtrate and concentrate to a thin extract of relative density of 1.03-1.08 (80℃). Adjust to pH 1.0-2.0 with dilute hydrochloric acid, keep warm at 80℃ for one hour, and stand for 24 hours. Filter, wash the precipitate to pH 4.0 with ethanol, continue wash to pH 7.0 with water, dry at low temperature, and grind. Distil volatile oil of Folium Rhododendri Daurici, keep water solution for further use.

Decoct the residue with water for two times, 2 hours for each, filter, and combine the filtrate. Decoct Cortex Syringae Amurensis with water for three times, 2 hours for the first time, 1 hour each for the second and third time, and filter. Combine the filtrate, mix with the extract of Folium Rhododendri Daurici, and concentrate to a quantity. Dry in vacuum at low temperature, grind, add the above extract of Radix Scutellariae and a quantity of adjuvant, make granules, and dry. Mix thoroughly volatile oil of Folium Rhododendri Daurici with a quantity of calcium carbonate, then mix thoroughly with the above granules, compress into 1000 tablets, and coat with sugar or film.

Description Sugar or film coats tablets with brown colour cores; taste bitter and astringent.

Identification (1) Pulverize 8 film coats tablets or sugar coats tablets, removed sugar coats for sugar coat tablets, add 20 ml of ether, and shake for 15 minutes. Take the ether solution, evaporate to dryness, dissolve the residue in 30 ml of 40% ethanol, by heating on a water bath for three times, and filter in warm. Combine the filtrate, evaporate to dryness, and dissolve the residue with 1 ml of methanol as the test solution. Prepare a solution with 1 g of Folium Rhododendri Daurici reference drug in the same manner as the reference drug solution. Carry out the method for thin layer chromatography (Appendix Ⅵ B), using silica gel G as the coating substance and a mixture of toluene, ethyl acetate and formic acid (7∶2∶0.5) as the mobile phase. Apply separately 2 μl of the above two solutions to the plate. After developing and removal of the plate, dry in air, spray with alumium chloride TS and examine under ultraviolet light at 365 nm. The fluorescent spots in the chromatogram obtained with the test solution correspond in position and colour to the spots in the chromatogram obtained with the reference drug solution.
(2) Expel the ether solvent of the residue obtained under Identification (1). To 1 g, add 3 ml of 75% ethanol, filter, and use the filtrate as the test solution. Dissolve a quantity of baicalin CRS in 75% ethanol to produce a solution containing 1 mg per ml as the reference solution. Carry out the method for thin layer chromatography (Appendix Ⅵ B), using acetic acid as the mobile phase. Apply separately 2 μl of each of the above two solutions to a polyamide membrane. After developing and removal of the membrane, dry in air, and examine under ultraviolet light at 365 nm. The fluorescent spot in the chromatogram obtained with the test solution corresponds in position and colour to the spot in the chromatogram obtained with the reference solution.
(3) Pulverize 5 film coats tablets or sugar coats tablets, removed sugar coats for sugar coat tablets, add 20 ml of methanol, and ultrasonicate for 20 minutes. Filter, evaporate the filtrate, dissolve the residue with 40% methanol, apply to a neutral alumina oxide column (100-200 mesh, 10 g, 1 cm in diameter), and elute with 50 ml of 40% methanol. Collect the eluate, evaporate to dryness, and dissolve the residue in 2 ml of methanol as the test solution. Dissolve a quantity of syringoside CRS in methanol to produce a solution containing 1 mg per ml as the reference solution. Carry out the method for thin layer chromatography (Appendix Ⅵ B), using silica gel G as the coating substance and a mixture of chloroform, methanol and water (5∶1∶0.1) as the mobile phase. Apply separately 5 μl of the above two solutions to the plate. After developing and removal of the plate, dry it in air, spray with 10% solution of sulfuric acid in ethanol, and heat at 105℃ to spot distinct. The spot in the chromatogram obtained with the test solution corresponds in position and colour to the spot in the chromatogram obtained with the reference solution.

Assay Carry out the method for high performance liquid chromatography (Appendix Ⅵ D).

Chromatographic system and system suitability Use octadecylsilane bonded silica gel as the stationary phase and a mixture of methanol, water and glacial acetic acid (45∶55∶1) as the mobile phase. As detector a spectrophotometer set at 276 nm. The number of theoretical plates of the column is not less than 2000, calculated with the reference to the peak of baicalin.

Reference solution Dissolve a quantity of baicalin CRS, weighed accurately, in 50% methanol to produce a solution containing 0.1 mg of baicalin per ml.

Test solution Pulverize 10 tablets, removed coats and weighed accurately, to fine powder, weigh a quantity (equivalent to the weight of 1 tablet) in a stopper conical flask, add accurately 100 ml of 50% methanol, stopper, weigh, ultrasonicate (power 200 W, frequency 40 kHz) for 10 minutes, allow to cool, weigh again, replenish the lost weight with 50% methanol, and mix thoroughly. Filter, and use the filtrate as the test solution.

Procedure Inject accurately 10 μl of each of the reference solution and the test solution into the column, determine and calculate.
It contains not less than 13.0 mg of baicalin ($C_{21}H_{18}O_{11}$) per tablet, referred to Radix Scutellariae.

Action To clear *heat* and resolve *phlegm*, and relieve coughing and asthma.

Indications Coughing with copious phlegm due to *phlegm-heat* retained in the lung; acute bronchitis and sudden attack by chronic bronchitis with above symptoms.

Usage and dosage 3-4 tablets, 3 times a day.

Strength 0.4 g per film coated tablet

Storage Preserve in tightly closed container.

Qing'e Wan (青娥丸)

Qing'e Pills

Ingredients Cortex Eucommiae (stir-baked with salt) 480 g; Fructus Psoraleae (stir-baked with salt) 240 g; Semen Juglandis (stir-baked) 150 g; Bulbus Allii 120 g.

Procedure Steam Bulbus Allii, dry and pulverize with Cortex Eucommiae and Fructus Psoraleae to fine powder, and sift. Triturate Semen Juglandis with the above powders, sift and mix thoroughly. To each 100 g of the powder, add 20-30 g of refined honey and a quantity of water, make water-honeyed pills and dry; or add 50-70 g of refined honey to make big honeyed pills.

Description Brown to blackish-brown water-honeyed or big honeyed pills; odour, slightly aromatic; taste, bitter, sweet and pungent.

Identification Microscopical: Rubber threads striped or twisted like a mass with granular surface. Testa palisade cells pale brown or reddish-brown, subpolygonal in surface view, wall slightly thickened, lumina containing reddish-brown substance. Epidermal cells of testa polygonal, sometimes oblate stomata visible, about 66 μm wide, guard cells broad reniform; fatty oil drops numerous.

Other requirements Comply with the general requirements for pills (Appendix Ⅰ A), except that disintegration time for water-honeyed pills should be within 2 hours.

Action To reinforce the kidney and strengthen the back.

Indications Lower back pain due to deficiency in the kidney,

accompanied with difficulty in sitting and weakness in knees.

Usage and dosage 6-9 g of water-honeyed pills or 1 big honeyed pill, 2-3 times a day.

Strength 9 g per big honeyed pill

Storage Preserve in tightly closed containers.

Qingfei Xiaoyan Wan (清肺消炎丸)

Qingfei xiaoyan Pills

Ingredients Herba Ephedrae; Gypsum Fibrosum; Pheretima; Fructus Arctii; Semen Lepidii seu Descurainiae; Calculus Bovis, Artifactus; Semen Armeniacae Amarum (stir-baked); Cornu Saigae Tataricae.

Procedure Grind Cornu Saigae Tataricae to ultra fine powder and pulverize the other ingredients except Calculus Bovis Artifactus to fine powder. Triturate with Cornu Saigae Tatariae and Calculus Bovis Artifactus powders, mix well and sift. To each 100 g of the powder add 60-80 g of refined honey and a quantity of water to make water-honeyed pills.

Description Brown water-honeyed pills; odour, stinking; taste, slightly pungent and bitter.

Identification (1) Microscopical: Stomata Characteristic, guard cells dumbbell-like in lateral view; fibers with fine crystals. Irregular plate crystals colourless with straight striations. Stone cells orange, conchoid-shaped, walls relatively thickened, pits at the broader end well-marked. Muscle fibers colourless to pale brown, undulant or crisscrossing arranged vertically. Endepidermal cells of testa yellow, polygonal or elongated polygonal, walls slightly thickened.

(2) Cut 20 pills into pieces, add 2 ml of dilute hydrochloric acid, stand for 30 minutes to dissolve, filter, the filtrate yields the reactions characteristic of calcium salt and sulfate (Appendix Ⅳ).

(3) Cut 20 pills into pieces, add 4 ml of chloroform, stir well, stand for 1 hour, use the supernatant as the test solution. Dissolve cholic acid CRS in dehydrated ethanol to produce a solution containing 2 mg per ml as the reference solution. Carry out the method for thin layer chromatography (Appendix Ⅵ B), using silica gel G as the coating substance and a mixture of chloroform, ether and glacial acetic acid (2∶2∶1) as the mobile phase. Apply separately to the plate 1 μl of each of the above two solutions. After developing and removal of the plate, dry in air. Spray with 10% sulfuric acid in ethanol, heat at 105℃ to the spots clear, examine under ultraviolet light at 365 nm. The fluorescent spot in the chromatogram obtained with the test solution corresponds in position and colour to the spot in the chromatogram obtained with the reference solution.

(4) Grind 10 g of the pills into powder, add 20 ml of chloroform and 3 ml of hydrochloric acid, heat under reflux for 1 hour, filter, and evaporate the filtrate to dryness. To the residue add 15 ml of ethyl acetate and 0.5 g of active carbon, heat to boil, filter, concentrate the filtrate to 1 ml and use it as the test solution. Prepare a solution with 0.5 g of Fructus Arctii reference drug in the same manner as the reference drug solution. Carry out the method for thin layer chromatography (Appendix Ⅵ B), using silica gel G as the coating substance and a mixture of petroleum ether (30-60℃), toluene, ether acetic, and glacial acetic acid (10∶20∶7∶0.5) as the mobile phase. Apply separately 6-10 μl of each of the two solutions to the plate. After developing and removal of the plate, dry in air. Spray with 5% ferric chloride in ethanol (acidified with hydrochloric acid), heat at 105℃ to the spots clear, The spots in the chromatogram obtained with the test solution correspond in position and colour to the spots in the chromatogram obtained with the reference drug solution.

Other requirements Comply with the general requirements for pills (Appendix Ⅰ A).

Assay Weigh accurately 3 g, in pieces, macerate with 10 ml of 2% alkaline methanol solution for 30 minutes, ultrasonicate for 10 minutes, centrifuge (3600 rpm) and separate the supernatant. Repeat the above operation for 3 times, combine the supernatants, and evaporate to dryness. Dissolve the residue in 30 ml of saturated sodium chloride solution, adjust to pH 9 with concentrated ammonium TS. Extract with five 20-ml quantities of ether, by shaking, combine the extracts, concentrate the ether extract to nearly dryness. Dissolve the residue with a quantity of methanol, filter to a 10 ml volumetric flask, dilute with methanol to volume and mix well as the test solution. Dissolve ephedrine hydrochloride, weighed accurately, in methanol to produce a solution containing 0.14 mg per ml as the reference solution. Carry out the method for thin layer chromatography (Appendix Ⅵ B), using a procoated high performance silica gel plate as the stationary phase and a mixture of chloroform, methanol and concentrated ammonium TS (20∶3.5∶0.6) as the mobile phase. Apply accurately to the plate 4 μl of the test solution, 2 μl and 4 μl of the reference solution separately. After developing and removal of the plate, dry in air. Spray with 0.2% ninhydrine in ethanol, heat at 105℃ to the spots clear, and stand for 30 minutes. Carry out the method for thin layer chromatography (Appendix Ⅵ B, thin layer chromatographic scanning method), scan at the wavelength: $\lambda_S = 490$ nm, $\lambda_R = 440$ nm. Measure the integration value of absorbance of the test solution and the reference solution and calculate.

It contains not less than 0.10 mg of ephedrine hydrochloride ($C_{10}H_{15}NO \cdot HCl$) per gram, referred to Herba Ephedrae.

Action To clear the lung and resolve *phlegm*, and relieve coughing and asthma.

Indications Stagnation of *phlegm-heat* in the lung, coughing with shortness of breath and expectoration of yellow, sticky *phlegm*, distending pain in the chest and hypochondria; upper respiratory tract infection, acute bronchitis, acute attack of chronic bronchitis and pulmonary infection with above symptoms.

Usage and dosage 10 pills for infants within 1 year old, 20 pills for children from 1 to 3 years old, 30 pills for children from 3 to 6 years old, 40 pills for children from 6 to 12 years old, 60 pills for children over 12 years old and adults, 3 times a day.

Precaution Be cautious with patients with cough due to exterior *wind-cold* and cardiac insufficiency.

Strength 8 g per 60 pills

Storage Preserve in tightly closed containers.

Qingfei Yihuo Wan (清肺抑火丸)

Qingfei Yihuo Pills

Ingredients Radix Scutellariae 140 g; Fructus Gardeniae 80 g; Rhizoma Anemarrhenae 60 g; Bulbus Fritillariae

Thunbergii 90 g; Cortex Phellodendri 40 g; Radix Sophorae Flavescentis 60 g; Radix Platycodonis 80 g; Radix Peucedani 40 g; Radix Trichosanthis 80 g; Radix et Rhizoma Rhei 120 g.

Procedure Pulverize the above ten ingredients to fine powder, sift, mix thoroughly, make pills with water and dry; or to each 100 g of the powder add 130-150 g of refined honey to make big honeyed pills.

Description Pale yellow to yellowish-brown watered pills, or brown big honeyed pills; odour, slight; taste, bitter.

Identification (1) Microscopical: Starch granules ovoid, 35-48 μm in diameter, hilum pointed, V-shaped or hoof-shaped, situated at the smaller end, striations fine and dense. Phloem fibres pale yellow, fusiform, walls thickened, with fine pit-canals. Fibre bundles bright yellow, surrounded by cells containing prisms of calcium oxalate, forming crystal fibres; walls of crystal cells lignified and thickened. Fibre bundles colourless, surrounded by cells containing prisms of calcium oxalate, forming crystal fibres. Needle crystals of calcium oxalate in bundles or scattered, 26-110 μm long. Clusters of calcium oxalate large, 60-140 μm in diameter. Bordered pitted vessels large, frequently broken, some bordered pits hexangular or rhombic, closely arranged. Anastomosing laticiferous tubes 14-25 μm in diameter, containing pale yellow granules. Stone cells of testa yellow or pale brown, mostly broken, when whole, long-polygonal, rectangular or irregular, walls thickened, with big rounded pits, lumina brownish-red.

(2) Pulverize 2 g of the watered pills to powder; or triturate well 3 g of the big honeyed pills, in pieces, with a quantity of kieselguhr. Add 20 ml of methanol, ultrasonicate for 30 minutes, cool, filter, and evaporate the filtrate to dryness. Dissolve the residue in 2 ml of methanol as the test solution. Dissolve baicalin CRS in methanol to produce a solution containing 1 mg per ml as the reference solution. Carry out the method for thin layer chromatography (Appendix Ⅵ B), using silica gel G mixed with 4% sodium acetate in sodium carboxymethylcellulose solution as the coating substance and a mixture of ethyl acetate, butanone, and formic acid (5∶3∶1∶1) as the mobile phase. Apply separately 5 μl of each of the reference solution and the test solution to the plate. After developing and removal of the plate, dry in air, spray with 1% ferric chloride in ethanol. A dark green spot in the chromatogram obtained with the test solution corresponds in position and colour to the spot in the chromatogram obtained with the reference solution.

(3) Pulverize 6 g of the watered pills to powder; or triturate well 9 g of the big honeyed pills, in pieces, with a quantity of kieselguhr. Add 30 ml of methanol, ultrasonicate for 20 minutes, cool, filter, and evaporate the filtrate to 10 ml. Apply to a small column (1.5 cm in diameter) packed with neutral aluminium oxide (100-200 mesh, 5 g), elute with 30 ml of methanol, collect the eluates, and evaporate to dryness. Dissolve the residue in 5 ml of methanol as the test solution. Dissolve geniposide CRS in ethanol to produce a solution containing 4 mg per ml as the reference solution. Carry out the method for thin layer chromatography (Appendix Ⅵ B), using silica gel G as the coating substance and a mixture of ethyl acetate, acetone, formic acid, and water (5∶5∶1∶1) as the mobile phase. Apply separately 5 μl of each of the reference solution and the test solution to the plate. After developing and removal of the plate, dry in air. Spray with sulfuric acid solution in methanol (5→10), heat at 110℃ to the spots clear. The spot in the chromatogram obtained with the test solution corresponds in position and colour to the spot in chromatogram obtained with the reference solution.

(4) Pulverize 2 g of the watered pills to powder, add 3 ml of concentrated ammonia TS and 20 ml of chloroform; or triturate well 3 g of the big honeyed pills, in pieces, with a quantity of kieselguhr, add 5 ml of concentrated ammonia TS and 40 ml of chloroform. Heat under reflux for 1 hour, cool, filter, and wash the filtrate with two 20-ml quantities of 1% sodium hydroxide solution. Separate the chloroform layer and evaporate to dryness. Dissolve the residue in 2 ml of methanol as the test solution. Dissolve berberine hydrochloride CRS in methanol to produce a solution containing 0.5 mg per ml as the reference solution. Carry out the method for thin layer chromatography (Appendix Ⅵ B), using silica gel G as the coating substance and a mixture of toluene, ethyl acetate, isopropanol, methanol, and concentrated ammonia TS (12∶6∶3∶3∶1) as the mobile phase. Apply separately 2 μl of each of the reference solution and the test solution to the plate. After developing in a chamber pre-equilibrated with concentrated ammonia vapour, remove the plate and dry in air. Examine under ultraviolet light at 365 nm. The fluorescent spot in the chromatogram obtained with the test solution corresponds in position and colour to the spot in chromatogram obtained with the reference solution.

(5) Pulverize 6 g of the watered pills to powder, add 2 ml of concentrated ammonia TS and 30 ml of chloroform; or triturate well 9 g of the big honeyed pills, in pieces, with a quantity of kieselguhr, add 6 ml of concentrated ammonia TS and 50 ml of chloroform. Allow to stand overnight, filter, evaporate the filtrate to dryness, and dissolve the residue in 2 ml of chloroform as the test solution. Dissolve matrine CRS in methanol to produce a solution containing 0.5 mg per ml as the reference solution. Carry out the method for thin layer chromatography (Appendix Ⅵ B), using silica gel G as the coating substance and a mixture of toluene, acetone, ethyl acetate, and concentrated ammonia TS (2∶3∶4∶0.2) as the mobile phase. Apply separately 2 μl of each of the reference solution and the test solution to the plate. After developing and removal of the plate, dry in air. Spray with dilute potassium iodobismuthate TS. The spot in the chromatogram obtained with the test solution corresponds in position and colour to the spot in chromatogram obtained with the reference solution.

(6) Pulverize 2 g of the watered pills to powder; or triturate well 3 g of the big honeyed pills, in pieces, with a quantity of kieselguhr. Add 20 ml of methanol, macerate for 1 hour. Ultrasonicate for 15 minutes, cool, and filter. Evaporate 5 ml of the filtrate to dryness, dissolve the residue in 10 ml of water. Add 1 ml of hydrochloric acid, heat under reflux for 30 minutes, and cool immediately. Extract with two 20-ml quantities of ether, combine the ether extracts, and evaporate to dryness. Dissolve the residue in 2 ml of methanol as the test solution. Prepare a solution with 0.1 g of Radix et Rhizoma Rhei reference drug in the same manner as the reference drug solution. Carry out the method for thin layer chromatography (Appendix Ⅵ B), using silica gel G as the coating substance and the upper layer of a mixture of petroleum ether (60-90℃), ethyl formate, and formic acid (15∶5∶1) as the mobile phase. Apply separately 2 μl of each of the reference drug solution and the test solution to the plate. After developing and removal of the plate, dry in air. Examine under ultraviolet light at 365 nm. Five orange fluorescent spots in the chromatogram obtained with the test solution correspond in position and colour to the spots in chromatogram obtained with the reference drug solution; expose the plate to concentrated ammonia vapour and examine in sunlight, the spots turn to red.

Other requirements Comply with the general requirements for pills (Appendix Ⅰ A).

Assay Carry out the method for high performance liquid chromatography (Appendix Ⅵ D).

Chromatographic system and system suitability Use octadecylsilane bonded silica gel as the stationary phase and a mixture of methanol, water, and phosphoric acid (38∶62∶0.3) as the mobile phase. As detector a spectrophotometer set at 280 nm. The number of theoretical plates of the column is not less than 2000, calculated with the reference to the peak of baicalin.

Reference solution Weigh accurately a quantity of baicalin, dissolve in 70% methanol to produce the reference solution containing 20 μg per ml.

Test solution Pulverize the watered pills to powder, weigh accurately 0.5 g; or weigh accurately 0.5 g of the big honeyed pills, obtained under the test of weight variation, cut into pieces, and triturate well with a quantity of kieselguhr. Transfer to a 250 ml round-bottomed flask, add accurately 100 ml of 70% methanol and weigh. Heat under reflux for 3 hours, cool, and weigh again. Replenish the loss of weight with 70% methanot, mix well and filter, use the filtrate as the test solution.

Procedure Inject accurately 10 μl of each of the reference solution and the test solution into the column, respectively, and calculate the content.
It contains not less than 4.5 mg of baicalin ($C_{21}H_{18}O_{11}$) per gram for watered pills, 50.0 mg for each big honeyed pills, referred to Radix Scutellariae.

Action To remove *heat* from the lung, relieve cough, resolve *phlegm* and relax bowels.

Indications *Heat* in the lung marked by cough with yellowish sticky *phlegm*, dryness of the mouth, sore throat and constipation.

Usage and dosage 6 g of watered pills, 1 big honeyed pill, 2-3 times a day.

Precaution Be cautious about pregnant women.

Strength 9 g per big honeyed pill

Storage Preserve in tightly closed containers.

Qingguo Wan
(青果丸)

Qingguo Pills

Ingredients Fructus Canarii 100 g; Flos Lonicerae Japonicae 100 g; Radix Scutellariae 100 g; Rhizoma Menispermi 100 g; Radix Ophiopogonis 100 g; Radix Scrophulariae 100 g; Radix Paeoniae Alba 100 g; Radix Platycodonis 100 g.

Procedure Pulverize the above eight ingredients to fine powder, sift and mix thoroughly. To each 100 g of the powder add 40-50 g of refined honey and a quantity of water to make water-honeyed pills, dry, coat with corn protein, dry in air; or to each 100 g of the powder add 110-130 g of refined honey to make big honeyed pills.

Description Blackish-brown water-honeyed pills or big honeyed pills; taste, slightly bitter.

Identification (1) Microscopical: Stone cells of endocarp pale yellow or almost colourless, walls thick, pit-canals and pits distinct, containing yellowish-brown masses. Pollen grains subrounded, up to about 76 μm in diameter, external walls with spinules and 3 germinal apertures. Phloem fibres pale yellow, fusiform, walls thick, pit-canals fine. Stone cells yellowish-brown or colourless, subrectangular, subrounded or irregular, striations obvious, up to about 94 μm in diameter. Clusters of calcium oxalate 18-32 μm in diameter, occurring in parenchymatous cells, often arranged in rows or several in one cell.
(2) To 60 water-honeyed pills or 1 big honeyed pill, cut into pieces, add 40 ml of methanol, ultrasonicate for 40 minutes, filter, evaporate the filtrate to dryness. Dissolve the residue in 20 ml of water, apply to a column of macroporous resin D101 (2 cm in internal diameter, 15 cm long), elute with 50 ml of water, discard the aqueous solution, and elute again with 50 ml of 20% ethanol, 40 ml of 40% ethanol successively, collect the eluate separately. Evaporate the eluate of 20% ethanol to dryness. Dissolve the residue in 1 ml of methanol as the test solution. Dissolve chlorogenic acid CRS in methanol to produce a solution containing 1 mg per ml as the reference solution. Carry out the method for thin layer chromatography (Appendix Ⅵ B), using silica gel G mixed with sodium carboxymethylcellulose prepared with 4% solution of sodium acetate as the coating substance and the upper layer of the mixture of butyl acetate, formic acid and water (2∶1∶1) as the mobile phase. Apply separately 5 μl of each of the two solutions to the plate. After developing and removal of the plate, dry in air, and examine under ultraviolet light at 365 nm. The fluorescent spot in the chromatogram obtained with the test solution corresponds in position and colour to the spot in the chromatogram obtained with the reference solution.
(3) Evaporate the eluate of 40% ethanol obtained under Identification test (2) to dryness. Dissolve the residue in 5 ml of methanol as the test solution. Dissolve paeoniflorin CRS in ethanol to produce a solution containing 1 mg per ml as the reference solution. Carry out the method for thin layer chromatography (Appendix Ⅵ B), using silica gel G as the coating substance and a mixture of chloroform, ethyl acetate, methanol and formic acid (40∶5∶10∶0.2) as the mobile phase. Apply separately 5 μl of each of the two solutions to the plate. After developing and removal of the plate, dry in air. Spray with a 5% solution of vanillin in sulfuric acid and heat at 105℃ to the spots clear. The spot in the chromatogram obtained with the test solution corresponds in position and colour to the spot in the chromatogram obtained with the reference solution.
(4) Dissolve baicalin CRS in methanol to produce a solution containing 1 mg per ml as the reference solution. Carry out the method for thin layer chromatography (Appendix Ⅵ B), using silica gel G mixed with carboxymethylcellulose sodium prepared with a 4% solution of sodium acetate as the coating substance and a mixture of ethyl acetate, butanone, formic acid and water (5∶3∶1∶1) as the mobile phase. Apply separately in strips 10 μl of the test solution obtained under Identification test (3) and the above reference solution to the plate. After developing and removal of the plate, dry in air. Spray with 5% ferric chloride in ethanol acidified with hydrochloric acid. The spot in the chromatogram obtained with the test solution corresponds in position and colour to the spot in the chromatogram obtained with the reference solution.
(5) Pulverize 3 g of the water-honeyed pills to powder; or triturate well 1 big honeyed pill, in pieces, with 2 g of kieselguhr. Add 4 ml of concentrated ammonia TS, mix well, and allow to stand for 1 hour. Add 25 ml of chloroform, heat under reflux for 1 hour, cool, and filter. Separate the chloroform layer, evaporate to dryness, and dissolve the residue in 1 ml of ethanol as the test solution. Prepare a solution with 1 g of Rhizoma Menispermi reference drug and 4 ml of concentrated ammonia TS in the same manner as the reference drug solution. Carry out the method for thin layer chromatography (Appendix Ⅵ B), using silica gel G as the coating substance and the mixture of chloroform, acetone, methanol, and ammonia TS (20∶3∶2∶0.1) as the mobile phase. Apply separately 4 μl of the

test solution and 2 μl of the reference drug solution to the plate. After developing and removing the plate, dry in air. Spray with dilute potassium iodobismuthate TS, and heat at 105℃ to the spots clear. The spots in the chromatogram obtained with the test solution correspond in position and colour to the spots in the chromatogram obtained with the reference drug solution.

(6) Pulverize 5 g of the water-honeyed pills to powder; or triturate well 2 g of big honeyed pill, in pieces, with 2 g of kieselguhr. Triturate with 30 ml of water, and transfer to a conical flask. Add 1 ml of hydrochloric acid, heat under reflux on a water bath for 1 hour, cool, and filter. Extract the filtrate by shaking with two 20-ml quantities of chloroform, combine the chloroform extracts, and wash with 30 ml of water. Separate the chloroform layer, and dehydrate with a quantity of anhydrous sodium sulfate. Filter and evaporate the filtrate to dryness, and dissolve the residue in 1 ml of methanol as the test solution. Prepare a solution with 1 g of Radix Ophiopogonis reference drug and 30 ml of water in the same manner as the reference drug solution. Carry out the method for thin layer chromatography (Appendix Ⅵ B), using silica gel G as the coating substance and a mixture of chloroform and acetone (4∶1) as the mobile phase. Apply separately 4 μl of the test solution and 2 μl of the reference drug solution to the plate. After developing and removal of the plate, dry in air. Spray with 10% sulfuric acid in ethanol, and heat at 105℃ to the spots clear. The spots in the chromatogram obtained with the test solution correspond in position and colour to the spots in the chromatogram obtained with the reference drug solution.

(7) Pulverize 3 g of the water-honeyed pills to powder; or triturate well 1 big honeyed pill, in pieces, with 2 g of kieselguhr. Add 20 ml of *n*-butanol saturated with water, ultrasonicate for 30 minutes, and filter. Evaporate the filtrate to dryness, dissolve the residue in 1 ml of methanol, add 2 g of neutral aluminium oxide, stir well on a water bath, and dry. Apply to a small column (1-1.5 cm in diameter) packed with neutral aluminium oxide (100-200 mesh, 4 g,), and elute with 50 ml of methanol. Collect the eluates, evaporate to dryness, and dissolve the residue in 1 ml of methanol as the test solution. Prepare a solution with 1 g of Radix Scrophulariae reference drug and 20 ml of *n*-butanol saturated with water in the same manner as the reference drug solution. Carry out the method for thin layer chromatography (Appendix Ⅵ B), using silica gel G as the coating substance and a mixture of chloroform, methanol, and water (5∶1∶0.1) as the mobile phase. Apply separately 4 μl of each of the reference drug solution and the test solution to the plate. After developing and removal of the plate, dry in air. Spray with 10% vanillin in sulfuric acid, heat at 105℃ to the spots clear. The spots in the chromatogram obtained with the test solution correspond in position and colour to the spots in the chromatogram obtained with the reference drug solution.

Other requirements Comply with the general requirements for pills (Appendix Ⅰ A).

Assay Carry out the method for high performance liquid chromatography (Appendix Ⅵ D).

Chromatographic system and system suitability Use octadecylsilane bonded silica gel as the stationary phase and a mixture of methanol-water-phosphoric acid (47∶53∶0.2) as the mobile phase. As detector a spectrophotometer set at 280 nm. The number of theoretical plates of the column is not less than 2500, calculated with the reference to the peak of baicalin.

Reference solution Weigh accurately a quantity of baicalin, dissolve in methanol to produce the reference solution containing 0.1 mg per ml.

Test solution Pulverize 2 g of the weter-honeyed pills to powder, weigh accurately 1 g; or cut a quantity of big honeyed pills, obtained under the test of weight variation, into pieces, weigh accurately 1 g, and triturate well with 0.5 g of kieselguhr. Add 40 ml of 70% ethanol, heat under reflux for 2 hours, cool, and filter. Wash the container and residue with a quantity of 70% ethanol. Combine the washings and the filtrate to a 100 ml volumetric flask, dilute to volume with 70% ethanol, mix well, filter, and use the successive filtrate as the test solution.

procedures Inject accurately 5 μl of each of the reference solution and the test solution into the column, respectively, and calculate the content.

It contains not less than 6.0 mg of baicalin ($C_{21}H_{18}O_{11}$) per gram for water-honeged pills, 25.0 mg for per big honeyed pill, referred to Radix Scutellariae.

Action To clear *heat* to relieve sore throat, and reduce swelling and relieve pain.

Indications Reddened, swollen throat, aphonia, hoarseness, dry mouth and tongue, or dry cough with expectoration of scanty *phlegm* due to accumulation of heat in the lung and stomach.

Usage and dosage 8 g of water-honeyed pills, or 2 big honeyed pills, 2 times a day.

Precaution Avoid pungent and spicy food.

Strength 1 g per 10 water-honeyed pills; 6 g per big honeyed pill

Storage Preserve in tightly closed containers.

Qinghou Liyan Keli
(清喉利咽颗粒)

Qinghou Liyan Granules

Ingredients Radix Scutellariae; Fructus Terminaliae Immaturus; Radix Platycodonis; Caulis Bambusae in Taenia; Semen Sterculiae Lychnophorae; Exocarpium Citri Rubrum; Fructus Aurantii; Folium Mori; Rhizoma Cyperi (processed with vinegar); Fructus Perillae; Caulis Perillae; Lignum Aquilariae Resinatum; Mentholum.

Procedure Distill volatile oil from Lignum Aquilariae Resinatum, and filter the aqueous liquid of distillation. Macerate warmly Semen Sterculiae Lychnophorae with water and filter. Decoct the other ingredients, except mentholum, with water and filter. Combine the above filtrates, stand, filter and concentrate to a thick extract. To the thick extract add a quantity of sucrose and make granules, dry, sift, add mentholum and volatile oil of Lignum Aquilariae Resinatum, make 1155 g of granules; or dry the thick extract, add a quantity of lactose and aspartame, make granules. Dry, sift, add mentholum and volatile oil of Lignum Aquilariae Resinatum, sift and mix thoroughly, make 578 g granules.

Description Yellowish-brown granules; odour, aromatic; taste, sweet and slightly bitter.

Identification (1) To 5 g of the granules or 2.5 g of the granules (with lactose), pulverize to fine powder. Add 20 ml of acetone, ultrasonicate for 10 minutes and filter, and evaporate the filtrate to 2 ml as the test solution. Weigh 1 g of Fructus Chebulae Immaturus reference drug, add 10 ml of acetone, ultrasonicate for 10 minutes, filter, and use the filtrate as the reference drug solution. Carry out the method for thin layer chromatography (Appendix Ⅵ B), using silica

gel G as the coating substance and a mixture of chloroform, ethyl acetate, acetone and glacial acetic acid (5∶2∶2∶1) as the mobile phase. Apply separately 5 μl of each of the reference drug solution and the test solution to the plate. After developing and removal of the plate, dry in air. Spray with ammoniated silver nitrate TS, and heat at 105℃ to the spots clear. The spots in the chromatogram obtained with the test solution correspond in position and colour to the spots in the chromatogram obtained with the reference drug solution.

(2) To 20 g of the granules or 10 g of the granules (with lactose), pulverize to fine powder. Add 40 ml of ethyl acetate, heat under reflux for 30 minutes, filter, and concentrate the filtrate to 1 ml as the test solution. Dissolve naringin CRS in ethyl acetate to produce a solution containing 0.5 mg per ml as the reference solution. Carry out the method for thin layer chromatography (Appendix Ⅵ B), using silica gel G as the coating substance and a mixture of ethyl acetate, butanone, formic acid, and water (5∶3∶1∶1) as the mobile phase. Apply separately 5 μl of each of the reference solution and the test solution to the plate. After developing and removal of the plate, dry in air. Spray with 10% aluminium trichloride in ethanol, heat at 105℃ for several minutes, and examine under ultraviolet light at 365 nm. The fluorescent spot in the chromatogram obtained with the test solution correspond in position and colour to the spot in chromatogram obtained with the reference solution.

Other requirements Comply with the general requirements for granules (Appendix Ⅰ C).

Assay Carry out the method for high performance liquid chromatography (Appendix Ⅵ D).

Chromatographic system and system suitability Use octadecylsilane bonded silica gel as the stationary phase and a mixture of methanol, water and glacial acetic acid (34∶66∶1) as the mobile phase. As detector a spectrophotometer set at 283 nm. The number of theoretical plates of the column is not less than 3650, calculated with the reference to the peak of baicalin.

Reference solution Weigh accurately a quantity of baicalin CRS, dissolve with dilute ethanol to produce a solution containing 50 μg per ml as the reference solution.

Test solution Weigh accurately 1 g or 0.5 g (with lactose), obtained in the test of packing variation and pulverized to fine powder, in a 50 ml stopper conical flask, add accurately 20 ml of water, weigh, dissolve by heating, allow to cool, weigh again, replenish the loss of weight with water, mix well. Add accurately 20 ml of ethanol, mix well, stand overnight and filter with a microporous film (0.45 μm), Use the successive filtrate as the test solution.

Procedure Inject accurately 10 μl of each of the reference solution and the test solution to the column and determine. It contains not less than 13.0 mg of baicalin ($C_{21}H_{18}O_{11}$) per pack, referred to Radix Scutellariae.

Action To clear *heat* to relieve the sore throat, soothe the chest and moisten the throat, and protect the vocal cord.

Indications Dry throat and hoarseness due to affliction from external *wind-heat*, acute and chronic pharyngitis or tonsillitis with above symptoms.

Usage and dosage Taken after dissolving in boiled water. 1 bag, 2-3 times a day.

Strength (1) 5 g per bag (lactose granules)
(2) 10 g per pack

Storage Preserve in well closed containers.

Qinghouyan Heji (清喉咽合剂)

Qinghouyan Mixture

Ingredients Radix Rehmanniae 180 g; Radix Ophiopogonis 160 g; Radix Scrophulariae 260 g; Fructus Forsythiae 315 g; Radix Scutellariae 315 g.

Procedure Pulverize the above five ingredients to coarse powder. Carry out the method for percolation as described under extracts and liquid extracts (Appendix Ⅰ O), macerate with 57% ethanol for 24 hours, then percolate slowly at a speed of 1 ml per minute, collect about 6000 ml of percolate, recover ethanol in vacuum and concentrate to about 1400 ml, add 800 ml of water, boil for 30 minutes, allow to stand for 48 hours, filter. Wash the residue with a small quantity of water, combine the washing with the filtrate and concentrate to about 1000 ml in vacuum. Add 3 g of sodium benzoate, stir, allow to stand for 24 hours, filter, add water to 1000 ml and mix well.

Description A brown clear liquid; taste, bitter.

Identification (1) To 1 ml add 25 ml of methanol, ultrasonicate for 20 minutes, filter and evaporate the filtrate to dryness. Dissolve the residue in 4 ml of methanol as the test solution. Dissolve baicalin CRS in methanol to produce a solution containing 1 mg per ml as the reference solution. Carry out the method for thin layer chromatography (Appendix Ⅵ B), using silica gel G as the coating substance and a mixture of acetate, butanone, formic acid, and water (5∶3∶1∶1) as the mobile phase. Apply separately 5 μl of each of the reference solution and the test solution to the plate. After developing and removing the plate, dry in air, and spray with 1% solution of ferric chloride. A dark-green spot in the chromatogram obtained with the test solution corresponds in position and colour to the spot in chromatogram obtained with the reference solution.

(2) Extract 10 ml with three 10-ml quantities of chloroform, combine the extracts, and evaporate to dryness. Dissolve the residue in 2 ml of methanol as the test solution. Dissolve forsythin CRS in methanol to produce a solution containing 2 mg per ml as the reference solution. Carry out the method for thin layer chromatography (Appendix Ⅵ B), using silica gel G as the coating substance and a mixture of benzene, acetone, ethyl acetate, formic acid, and water (7∶8∶5∶1∶1) as the mobile phase. Apply separately 2 μl of each of the reference solution and the test solution to the plate. After developing and removing the plate, dry in air. Spray with vanillin in sulfuric acid TS, and heat at 105℃ to the spots clear. The spot in the chromatogram obtained with the test solution corresponds in position and colour to the spot in chromatogram obtained with the reference solution.

(3) Extract 1 ml with two 10-ml quantities of ethyl acetate, and discard the ethyl acetate extracts. Extract again with two 10-ml quantities of *n*-butanol saturated with water, combine the *n*-butanol extracts, evaporate to dryness, and dissolve the residue in 1 ml of methanol as the test solution. To 1 g of the Radix Scrophulariae reference drug, add 20 ml of *n*-butanol saturated with water, ultrasonicate for 30 minutes and filter, evaporate the filtrate to dryness, and dissolve the residue in 2 ml of methanol as the reference drug solution. Carry out the method for thin layer chromatography (Appendix Ⅵ B), using silica gel G as the coating substance and a mixture of chloroform and methanol (13∶2) as the mobile phase. Apply separately 2 μl of each

of the reference drug solution and the test solution to the plate. After developing and removing the plate, dry in air. Spray with the vanillin in sulfuric acid TS, and heat at 105℃ to the spots clear. The spots in the chromatogram obtained with the test solution correspond in position and colour to the spots in chromatogram obtained with the reference drug solution.

Relative density 1.02-1.10 (Appendix Ⅶ A).

pH value 4.0-6.0 (Appendix Ⅶ G).

Other requirements Complies with the general requirements for mixture (Appendix Ⅰ J).

Assay Carry out the method for high performance liquid chromatography (Appendix Ⅵ D).

Chromatographic system and system suitability Use octadecylsilane bonded silica gel as the stationary phase and a mixture of methanol and 0.2% solution of phosphoric acid (28∶72) as the mobile phase. As detector a spectrophotometer set at 278 nm. The number of theoretical plates of the column is not less than 5000, calculated with the reference to the peak of baicalin.

Reference solution Weigh accurately a quantity of baicalin, dissolve in methanol to produce the reference solution containing 0.2 mg per ml.

Test solution Weigh accurately 1.2 g of the mixture to a 50 ml volumetric flask, add a quantity of methanol, ultrasonicate (power 135 W, frequency 59 kHz) for 20 minutes, allow to cool, dilute to volume with methanol, and shake well. Measure accurately 10 ml to a 25 ml volumetric flask, dilute to volume with methanol and mix well. Filter and use the successive filtrate as the test solution.

It contains not less than 14 mg of baicalin ($C_{21}H_{18}O_{11}$) per ml, referred to Radix Scutellariae.

Action To nourish *yin* and clear the lung, and relieve sore throat and remove toxic materials.

Indications Swelling and sore throat, dry throat, swelling of tonsil due to *dry-heat* from *yin* deficiency and internal *toxic-heat* stagnation.

Usage and dosage 20 ml for the first time, and then 10-15 ml, 4 times a day; appropriate reduction of the dosage for children.

Strength (1) 100 ml per bottle (2) 150 ml per bottle

Storage Preserve in tightly closed containers, stored in a cool place.

Qinghuozhimai Pian
(清火栀麦片)

Qinghuozhimai Tablets

Ingredients Herba Andrographis 800 g; Fructus Gardeniae 100 g; Radix Ophiopogonis 100 g.

Procedure Pulverize 140 g of Herba Andrographis and Fructus Gardeniae to fine powder, sift. Decoct the remainder of Herba Andrographis and Radix Ophiopogonis with water twice, 2 hours for each time, combine the decoction, filter and concentrate the filtrate to a thick extract with a relative density of 1.30-1.40. Stir thoroughly with the fine powder, a quantity of excipient, make granules, make into 1000 tablets and coat with sugar.

Description Sugar coated tablets with brownish-green or yellowish-brown to dark brown colour core; taste very bitter.

Identification (1) Pulverize 10 tablets, removed the sugar coats, to fine powder, add 30 ml of petroleum ether (60-90℃), heat under reflux for 30 minutes, discard the petroleum ether, evaporate the residue to dryness, then heat under reflux with 30 ml of dehydrated ethanol for 30 minutes, filter, evaporate the filtrate to dryness, dissolve the residue in 2 ml of dehydrated ethanol as the test solution. Dissolve andrographolide CRS in dehydrated ethanol to produce a solution containing 3 mg per ml as the reference solution. Carry out the method for thin layer chromatography (Appendix Ⅵ B,) using silica gel GF_{254} as the coating substance, and a mixture of chloroform, ethyl acetate and dehydrated ethanol (9∶6∶1) as the mobile phase. Apply separately 5 μl of the reference solution and 1-4 μl of the test solutions to the plate. After developing and removal of the plate, dry in air. Examine under ultraviolet light at 254 nm. The fluorescent spot in the chromatogram obtained with the test solution corresponds in position and colour to the spot in the chromatogram obtained with the reference solution.

(2) Dissolve geniposide CRS in methanol to produce a solution containing 4 mg per ml as the reference solution. Carry out the method for thin layer chromatography (Appendix Ⅵ B), using silica gel G as the coating substance, and a mixture of chloroform and methanol (3∶1) as the mobile phase. Apply separately 5 μl of the reference solution and 2 μl of the test solutions obtained under Identification test (1) to the plate. After developing and removal of the plate, dry in air. Spray with a sulfuric acid solution (1→10), heat at 105℃ to the spot clear. The spot in the chromatogram obtained with the test solution corresponds in position and colour to the spot in the chromatogram obtained with and the reference solution.

(3) Pulverize 5 tablets, removed the sugar coats, to fine powder, add 20 ml of 3.6% hydrochloric acid solution, heat under reflux for 1 hour, cool and filter, extract the filtrate with two 10-ml of chloroform, combine the chloroform extracts, evaporate to dryness, dissolve the residue in 2 ml of dehydrated ethanol as the test solution. Decoct 0.5 g of Radix Ophiopogonis reference drug with water for 1 hour, filter, concentrate the filtrate to a thick extract. Prepare a solution in the same manner as the reference drug solution. Carry out the method for thin layer chromatography (Appendix Ⅵ B), using silica gel GF_{254} as the coating substance, and a mixture of chloroform and acetone (4∶1) as the mobile phase. Apply separately 5 μl of each of the above two solutions to the plate. After developing and removal of the plate, dry in air. Examine under ultraviolet light at 254 nm. The fluorescent spots in the chromatogram obtained with the test solution correspond in position and colour to the spots in the chromatogram obtained with the reference drug solution.

Other requirements Comply with the general requirements for tablets (Appendix Ⅰ D).

Assay ***Herba Andrographis*** Carry out the method for high performance liquid chromatography (Appendix Ⅵ D).

Chromatographic system and system suitability Use Octadecylsilane bonded silica gel as the stationary phase and a mixture of methanol and water (55∶45) as the mobile phase. As detector a spectrophotometer set at 230 nm for andrographolide and 250 nm for dehydroandrographolide. The number of theoretical plates of the column is not less than 2000, calculated with the reference to the peak of andrographolide and dehydroandrographolide separately.

Reference solution Dissolve a quantity of andrographolide CRS and dehydroandrographolide CRS, weigh accurately, in

methanol to produce a mixture containing 20 μg of each per ml as the reference solution.

Test solution Take 20 tablets, removed sugar coats, pulverize to fine powder. Weigh accurately 0.3 g of the powder in a 50 ml volumetric flask, add a quantity of methanol, ultrasonicate (power 250 W, frequency 50 kHz) for 30 minutes, cool. Dilute with methanol to the volume, shake well and filter, use the successive filtrate as the test solution.

procedure Inject accurately 10 μl of the reference solution and the test solution into the column, and calculate the content.

It contains not less than 1.0 mg of the total amount of andrographolide ($C_{20}H_{30}O_5$) and dehydroandrographolide ($C_{20}H_{28}O_4$) per tablet, referred to Herba Andrographis.

Fructus Gardeniae Carry out the method for high performance liquid chromatography (Appendix Ⅵ D).

Chromatographic system and system suitability Use Octadecylsilane bonded silica gel as the stationary phase and a mixture of acetonitrile and water (15 : 85) as the mobile phase. As detector a spectrophotometer set at 238 nm. The number of theoretical plates of the column is not less than 2000, calculated with the reference to the peak of Geniposide.

Reference solution Dissolve a quantity of geniposide CRS, accurately weighed, in ethanol to produce a solution containing 30 μg per ml.

Test solution AS the test solution obtained under Assay of Herba Andrographis

procedure Inject accurately 10 μl of the reference solution and the test solution into the column, and calculate the content.

It contains not less than 1.2 mg of Geniposide ($C_{17}H_{24}O_{10}$) per tablet, referred to Fructus Gardeniae.

Action To clear *heat* and *toxicity*, and cool blood and reduce swelling.

Indications Swollen painful throat, or fever, or toothache or bloodshot eyes due to extremely abundant *heat* in the lung and stomach.

Usage and dosage 2 tablets, 2 times a day.

Storage Preserve in tightly closed containers.

Qingkailing Koufuye (清开灵口服液)

Qingkailing Mixture

Ingredients Cholic acid; Pulvis Concha Margaritifera; Hyodeoxycholic acid; Fructus Gardeniae; Pulvis Cornu Bubali; Radix Isatidis; Baicalin; Flos Lonicerae Japonicae.

Procedure Grind Cornu Bubali to fine powder. Decoct Radix Isatidis, Fructus Gardeniae and Flos Lonicerae Japonicae with water for 2 times, 1 hour for each time, combine the decoctions, filter, concentrate to a thin extract with a relative density of 1.15-1.20 (50℃), stand to cool, add a quantity of ethanol, stand, filter, recover ethanol, add a quantity of water and stand. Hydrolyze Cornu Bubali powder and Concha Margaritifera with a quantity of acid, filter and adjust to pH 4 with 15% solution of calcium hydroxide. Filter, concentrate the filtrate to a thin extract with a relative density of 1.05-1.10 (50℃), allow to cool, add a quantity of ethanol, stand, filter, recover ethanol, add a quantity of water and stand. Dissolve cholic acid, and hyodeoxycholic acid with a quantity of ethanol. Combine the above extracts and hydrolyzate, mix well and add to ethanol solution of cholic acid and hyodeoxycholic acid. Add a quantity of ethanol, stand and filter. Recover ethanol, add a quantity of water, stand, add baicalin, dissolve by adjusting pH, add an appropriate quantity of flavoring agents, dilute to 1000 ml with water, and adjust to pH 7.2-7.5 with sodium hydroxide. Stir thoroughly, stand, and filter.

Description A clear, brownish-red liquid; taste, sweet and slightly bitter.

Identification (1) Evaporate 5 ml to dryness, dissolve the residue in 1 ml of ethanol as the test solution. Dissolve cholic acid CRS and hyodeoxycholic acid CRS in ethanol to produce a mixture solution containing 1 mg of each per ml as the reference solution. Carry out the method for thin layer chromatography (Appendix Ⅵ B), using silica gel G as the coating substance and the upper layer of a mixture of *n*-hexane, ethyl acetate, acetic acid, and methanol (20 : 25 : 4 : 6) as the mobile phase. Apply separately 10 μl of each of the above two solutions to the plate. After developing and removal of the plate, dry in air. Spray with 5% sulfuric acid in ethanol, heat at 105℃ to the spots clear. The spots in the chromatogram obtained with the test solution correspond in position and colour to the spots in the chromatogram obtained with the reference solution.

(2) Concentrate 10 ml to 2 ml, apply to a column of macroporous resin D101 (1 cm in internal diameter and 10 cm long), wash with 100 ml of water, and discard the washing. Elute with 50 ml of 70% ethanol, collect the eluate, evaporate to dryness, and dissolve the residue in 1 ml of methanol as the test solution. Dissolve geniposide CRS in ethanol to produce a solution containing 1 mg per ml as the reference solution. Carry out the method for thin layer chromatography (Appendix Ⅳ B), using silica gel G as the coating substance and a mixture of ethyl acetate, acetone, formic acid and water (5 : 5 : 1 : 1) as the mobile phase. Apply separately to the plate 5 μl of each of the above two solutions. After developing and removal of the plate, dry in air. Spray with 10% sulfuric acid in ethanol, heat at 105℃ to spots clear. The spot in the chromatogram obtained with the test solution corresponds in position and colour to the spot in the chromatogram obtained with the reference solution.

Relative density Not less than 1.02 (Appendix Ⅶ A).

pH value 6.0-7.8 (Appendix Ⅶ G).

Other requirements Complies with the general requirements for mixtures (Appendix Ⅰ J).

Assay ***Baicalin*** Carry out the method for high performance liquid chromatography (Appendix Ⅵ D).

Chromatographic system and system suitability Use octadecylsilane bonded silica gel as the stationary phase and a mixture of methanol, tetrahydrofuran and 0.055% phosphoric acid (4 : 1 : 6) as the mobile phase. As detector a spectrophotometer set at 278 nm. The number of theoretical plates of the column is not less than 4500, calculated with the reference to the peak of baicalin.

Reference solution Weigh accurately a quantity of baicalin CRS, dissolve in 70% ethanol to produce a reference solution containing 30 μg per ml.

Test solution Measure accurately 1 ml, in a centrifugal tube, add a drop of 6 mol/L hydrochloric acid solution, mix well, centrifuge at 4000 rpm and discard the supernatant. Add a quantity of 70% ethanol to precipitate, dissolve on a 70℃ water bath by shaking, transfer to a 50 ml volumetric flask, allow to cool, dilute with 70% ethanol to volume and mix well. Measure accurately 1 ml in a 5 ml volumetric

flask, dilute with 70% ethanol to volume and mix well.

Procedure Inject accurately 10 μl of each of the reference solution and the test solution into the column, respectively, and determine.
It contains not less than 3.5 mg of baicalin ($C_{21}H_{18}O_{11}$) per ml.

Total nitrogen content Measure accurately 3 ml, place in a 250 ml Kjeldahl flask, add 0.5 g of a mixture of potassium sulfate (or anhydrous sodium sulfate) and cupric sulfate (10:1) and 5 ml of sulfuric acid, heat until the solution nearly colourless. Allow to cool, transfer to a 25 ml volumetric flask, dilute with water to volume and mix well. Measure accurately 5 ml, carry out the method for determination of nitrogen (Appendix Ⅸ L, method 2) and determine.
It contains not less than 2.2 mg and not more than 3.0 mg of nitrogen per ml.

Action To clear *heat* to relieve *toxicity*, and tranquilize and anchor the mind.

Indications Persistent high fever, restlessness, swollen painful throat, crimson tongue, yellow fur and rapid pulse due to affliction from external *wind-heat* and seasonal pathogenic factor; upper respiratory tract infection, viral influenza, acute suppurative tonsillitis, acute pharyngitis, acute bronchitis and high fever with above symptoms.

Usage and dosage 20-30 ml, 2 times a day. Appropriate reduction of dosage for children.

Precaution Be cautious about diarrhea patients due to chronic disease and debility.

Strength 10 ml per phial

Storage Preserve in tightly closed containers, protected from light.

Attached The standard of baicalin is included in the monograph of Qinkailin Injection.

Qingkailing Zhusheye (清开灵注射液)

Qingkailing Injection

Ingredients Cholic acid; Pulvis Concha Margaritifera; Hyodeoxycholic acid; Fructus Gardeniae; Pulvis Cornu Bubali; Radix Isatidis; Baicalin; Flos Lonicerae Japonicae.

Procedure Decoct Radix Isatidis with water for 2 times, 30 minutes for each time, combine the decoctions and filter. Concentrate the filtrate to 200 ml, add ethanol to a content of 60% ethanol, store in low temperature, filter, recover the ethanol, add a quantity of water and store in low temperature for later use. Decoct Fructus Gardeniae with water for 2 times, 1 hour for the first time and 0.5 hour for the second time, combine the decoctions and filter. Concentrate the filtrate to 25 ml, add ethanol to a content of 60% ethanol, store in low temperature, filer, recover the ethanol, add a quantity of water and store in low temperature for later use. Decoct Flos Lonicerae Japonicae with water for 2 times, 30 minutes for each time, combine the decoctions and filter. Concentrate the filtrate to 60 ml, add ethanol to a content of 75% ethanol, filter, adjust to pH 8.0, store in low temperature, recover the ethanol, add ethanol to a content of 85% ethanol, store in low temperature, filter, add a quantity of water and store in low temperature for later use. Hydrolyze Pulvis Cornu Bubali with a quantity of barium hydroxide solution and hydrolyze Pulvis Concha Margaritifera with a quantity of sulfuric acid for 7-9 hours, and filter, combine the filtrate, adjust to pH 3.5-4.0, filter, add ethanol to a content of 60% ethanol, store in low temperature, filter, recover the ethanol, add a quantity of water and store in low temperature for later use. Combine Fructus Gardeniae extract, Radix Isatidis extract, Cornu Bubali hydrolyzate and Concha Margaritifera hydrolyzate, add to the solution of Cholic acid and Hyodeoxycholic acid in 75% ethanol, mix well, add ethanol to a content of 75% ethanol, adjust to pH 7.0, store in low temperature, filter, recover the ethanol, add a quantity of water and store in low temperature for later use. Dissolve baicalin in water for injection, adjust to pH 7.5, add Flos Lonicerae Japonicae extract, mix well. Combine with the above solution, mix well, add water for injection to 1000 ml, processing with active charcoal, store in low temperature, filter, pack and sterilize.

Description A clear, brownish-yellow or brownish-red liquid.

Identification (1) Evaporate 10 ml of the injection to dryness on a water bath, allow to cool, dissolve the residue in 1 ml of ethanol and use the supernatant as the test solution. Dissolve a quantity of geniposide CRS in ethanol to prepare a solution containing 4 mg per ml as the reference solution. Carry out the method for thin layer chromatography (Appendix Ⅵ B), using silica G as the coating substance and a mixture of ethyl acetate, acetone, formic acid and water (5:5:1:1) as the mobile phase. Apply separately 5 μl of each of the above two solutions to the plate. After developing and removal of the plate, dry in air. Spray with 10% sulfuric acid in ethanol, and heat at 105℃ to clear. The spot in the chromatogram obtained with the test solution corresponds in position and colour to the spot in the chromatogram obtained with the reference solution.
(2) Mix well 1 ml with 2 ml of ethanol as the test solution. Dissolve a quantity of cholic acid CRS and hyodeoxycholic acid CRS in ethanol to prepare a mixture containing 1 mg of each per ml as the reference solution. Carry out the method for thin layer chromatography (Appendix Ⅵ B), using silica gel G as the coating substance and a mixture of isooctane, ethyl acetate and glacial acetic acid (15:7:5) as the mobile phase. Apply separately 5 μl of each of the above two solutions to the plate. After developing and removal of the plate, dry in air. Spray with 10% sulfuric acid in ethanol, and heat at 105℃ to spots clear. The spot in the chromatogram obtained with the test solution corresponds in position and colour to the spot in the chromatogram obtained with the reference solution.
(3) Dissolve a quantity of baicalin CRS in 70% ethanol to prepare solution containing 1 mg per ml as the reference solution. Carry out the method for thin layer chromatography (Appendix Ⅵ B), using polyamide membrane as the coating substance and acetic acid as the mobile phase. Apply separately 2 μl of each of the reference solution and the test solution obtained under Identification (2) to the film. After developing and removal of the membrane, dry in air. Spray with 1% ferric chloride in ethanol. The spot in the chromatogram obtained with the test solution corresponds in position and colour to the spot in the chromatogram obtained with the reference solution.

pH value 6.8-7.5 (Appendix Ⅶ A).

Materials about injection Complies with the general requirement for Determination of Materials about Injection (Appendix Ⅸ S), except oxalate.

Oxalate Measure 5 ml in a centrifugal tube, add 6 drops of 6 mol/L hydrochloric acid, mix well, centrifuge. Filter the supernatant, measure 2 ml of the filtrate, adjust the pH value to 5-6, add 2-3 drops of 3% solution of calcium chloride and allow to sand for 10 minutes. No precipitate

should be observed.

Heavy metals Measure accurately 1 ml in a crucible, evaporate to dryness. Ignite slowly to complete charred, allow to cool, carry out the limit test for heavy metal (Appendix Ⅸ E, method 1), not more than 10 ppm.

Undue toxicity Complies with the test for undue toxicity (Appendix Ⅺ C, Volume 2), using 0.5 ml per mice by intravenous administration.

Pyrogens Complies with the test for pyrogens (Appendix Ⅻ A), using 5 ml per kilogram of the rabbit's weight.

Haemolysis and agglutination *Preparation of 2% red blood cell, RBC, suspension* Measure a quantity of blood of rabbit, transfer it into a conical flask with glass beads, shake for 10 minutes, discard the fibrinogen, and collect the defibrin blood. To the defibrin blood, add 10 times volume of saline, shake well and centrifuge to remove supernatant. Wash the pellet with saline for 2 or 3 times until the supernatant becomes transparent, and then prepare the 2% RBC suspension with saline.

Procedure Add the 2% RBC suspension and saline into 6 tubes according to the behind proportions, shake well, and keep it in 37℃ for 30 minutes. Then add the injection according to the behind proportions, shake well, and keep them in 37℃ for 2 hours.

No. of tubes	1	2	3	4	5	6
2% RBC suspension/ml	2.5	2.5	2.5	2.5	2.5	2.5
Saline /ml	2.0	2.1	2.2	2.3	2.4	2.5
Injection /ml	0.5	0.4	0.3	0.2	0.1	0.0

Examine the result every 15 minutes during the first hour and once for the second hour. Haemolysis and agglutination must not appear in the No. 3 tube within 2 hours.

Other requirements Complies with the general requirements for injections (Appendix Ⅰ U).

Assay ***Total nitrogen content*** Measure accurately 0.5 ml of injection, carry out the method for the determination of Nitrogen (Appendix Ⅸ L, method 2).
It contains not less than 2.2 mg and not more than 3.0 mg of nitrogen (N) per ml.

Cholic acid Carry out the method for high performance liquid chromatography (Appendix Ⅵ D).

Chromatographic system and system suitability Use octadecylsilane bonded silica gel as the stationary phase and a mixture of acetonitrile, water and phosphoric acid (35∶65∶0.1) as the mobile phase. As detector a spectrophotometer set at 192 nm, maintain the column temperature at 40℃. The number of the theoretical plates of the column is not less than 5000, calculated with the reference to the peak of cholic acid.

Reference solution Dissolve a quantity of cholic acid CRS, accurately weighed, in 60% solution of acetonitrile to prepare a solution containing 1.0 mg per ml.

Test solution Measure accurately 10 ml, add 0.5 ml of dilute hydrochloric acid TS, extract with successive quantities of 20 ml, 20 ml, 15 ml and 15 ml of ethyl acetate. Combine the ethyl acetate extracts, and recover ethyl acetate to dryness. Dissolve the residue in 60% acetonitrile and transfer to a 25 ml volumetric flask, dilute with 60% acetonitrile to volume, and mix well. Filter and use the successive filtrate as the test solution.

Procedure Inject accurately 10 μl of each of the reference solution and the test solution into the column, and calculate the content.
It contains not less than 1.50 mg and not more than 3.25 mg of cholic acid ($C_{24}H_{40}O_5$) per ml.

Fructus Gardeniae Carry out the method for high performance liquid chromatography (Appendix Ⅵ D).

Chromatographic system and system suitability Use octadecylsilane bonded silica gel as the stationary phase and a mixture of acetonitrile and water (10∶90) as the mobile phase. As detector a spectrophotometer set at 238 nm. The number of the theoretical plates of the column is not less than 3000, calculated with the reference to the peak of geniposide.

Reference solution Dissolve a quantity of geniposide CRS, accurately weighed, in methanol to prepare a solution containing 30 μg per ml.

Test solution Measure accurately 20 ml, place to a stopper conical flask, add accurately 1 ml of a solution of phosphoric acid (1→3), mix well. Allow to stand for 1 hour at 2-10℃, remove the conical flask, allow to room temperature. Centrifuge at 3000 rpm for 20 minutes. Measure accurately 5 ml of the supernatant to a 50 ml volumetric flask, dilute with methanol to volume, and mix well. Filter and use the successive filtrate as the test solution.

Procedure Inject accurately 10 μl of each of the reference solution and the test solution into the column, and calculate the content.
It contains not less than 0.10 mg of geniposide ($C_{17}H_{24}O_{10}$) per ml, referred to Fructus Gardeniae.

Baicalin Carry out the method for high performance liquid chromatography (Appendix Ⅵ D).

Chromatographic system and system suitability Use octadecylsilane bonded silica gel as the stationary phase and a mixture of methanol, water and phosphoric acid (47∶53∶0.2) as the mobile phase. As detector a spectrophotometer set at 276 nm. The number of the theoretical plates of the column is not less than 3000, calculated with the reference to the peak of baicalin.

Reference solution Weigh accurately a quantity of baicalin CRS in a 100 ml volumetric flask, add a quantity of 70% ethanol to dissolve, add 1 ml of the the solution of mobile phase, dilute with 70% ethanol to volume, and mix well (containing 50 μg of baicalin per ml).

Test solution Measure accurately 1 ml, place in a 100 ml volumetric flask, dilute with 70% ethanol to volume, and mix well. Filter and use the successive filtrate as the test solution.

Procedure Inject accurately 10 μl of each of the reference solution and the test solution into the column, and calculate the content.
It contains not less than 3.5 mg and not more than 5.5 mg of baicalin ($C_{21}H_{18}O_{11}$) per ml.

Action To clear *heat* to relieve *toxicity*, resolve *phlegm*, and dredge meridians and resuscitate.

Indications Febrile disease, coma, hemiplegia in stroke and delirium; acute hepatitis, upper respiratory tract infection, pneumonia, cerebral thrombosis and cerebral hemorrhage with above symptoms.

Usage and dosage Intramuscular injection, 2-4 ml a day. Intervenous drop infusion for severe case, 20-40 ml a day, used after diluted by 10% amylaceum injection 200 ml or sodium chloride injection 100 ml.

Precaution
(1) Be cautious about those who have chills and fever in an

exterior syndrome or a history of drug allergy.
(2) Cease medication immediately when there occurs allergic reaction, and handle the case with desensitization.
(3) When cloudiness or sedimentation is seen, it cannot be used. If cloudiness occurs when it is diluted with 10% glucose or sodium hydride injection, it cannot be used too.
(4) Compatibility : Up to now it has been confirmed that it is incompatible with Gentamicin, Benzylpenicillin G potassium, Epinephrine, Metaraminol, Erythromycin, Dopamine, Lobeline, Mephentermine sulfate.
(5) It should be used within 4 hours after it is diluted.
(6) Infusion speed : Slow the dropping speed. For children it is proper to give 20-40 drops per minute and for adults 40-60 drops per minute.
(7) Use it according to the description of the "Usage and Dosage". It can be diluted with 5% glucose injection or sodium chloride injection in proportion of 10 ml Qingkailing: 100 ml dilution.

Strength (1) 2 ml per vial (2) 10 ml per vial

Storage Preserve in well closed containers.

Attached:
1. *Cholic acid* Weigh accurately 10 mg in a 10 ml volumetric flask, add a 60% acetonitrile to dissolve and dilute to volume, mix well. Carry out the method described under Assay of *Cholic acid* in Qingkailing Zhusheye.
It contains not less than 80 per cent of cholic acid ($C_{24}H_{40}O_5$).
2. *Baicalin* Weigh accurately 5 mg in a 100 ml volumetric flask, add 70% ethanol to dissolve and mix well. Carry out the method described under of Assay *Baicalin* in Qingkailing Zhusheye.
It contains not less than 90 per cent of baicalin ($C_{21}H_{18}O_{11}$).

Qinglin Keli
(清淋颗粒)

Qinglin Granules

Ingredients Herba Dianthi 111 g; Herba Polygoni Avicularis 111 g; Caulis Akebiae 111 g; Semen Plantaginis (stir-baked with salt) 111 g; Pulvis Talci 111 g; Fructus Gardeniae 111 g; Radix et Rhizoma Rhei 111 g; Radix et Rhizoma Glycyrrhizae Praeparata Cum Melle 111 g.

Procedure Decoct the above eight ingredients with water three times, 1 hour for each. Combine the decoctions, filter and evaporate the filtrate to 1332 ml, add ethanol to a content of 65% of ethanol and stir well, stand for 24 hours, separate the supernatant and filter. Mix Precipitate with a quantity of 65% ethanol thoroughly, stand for 4 hours, separate the supernatant and filter. Combine the above filtrate, recover ethanol and concentrate on vacuum to a thin extract with relative density of 1.28-1.30 (80℃), add a quantity of sucrose, mix well, make 1000 g of granules with 45% ethanol, and dry.

Description Yellowish-brown granules; taste, sweet, slightly bitter.

Identification (1) To 10 g, dissolved in 10 ml of water, add 1.5 ml of hydrochloric acid, heat on a water bath for 30 minutes, allow to room temperature. Extract with two 20-ml quantities of chloroform, combine the chloroform extract, and expel the solvent to dryness. Dissolve the residue in 1 ml of methanol as the test solution. Prepare a solution with 0.5 g of Radix et Rhizoma Rhei reference drug as the reference drug solution in the same manner. Dissolve separately emodin CRS, chrysophanol CRS and rhein CRS in methanol to produce a solution containing 0.2 mg of each per ml as the reference solutions. Carry out the method for thin layer chromatography (Appendix Ⅵ B), using silica gel G mixed with sodium carboxymethylcellulose as the coating substance and the upper layer of a mixture of petroleum ether (30-60℃), ethyl formate and formic acid (15∶5∶1) as the mobile phase. Apply separately 10 μl of the test solution, 5 μl of each of the reference solutions and the reference drug solution to the plate. After developing and removal of the plate, dry in air, examine under ultraviolet light at 365 nm. The main five fluorescent spots in the chromatogram obtained with the test solution correspond in position and colour to the spots in the chromatogram obtained with the reference drug solution. The orange-yellow fluorescent spots in the chromatogram obtained with the test solution correspond in position and colour to the spots in the chromatogram obtained with the reference solutions.
(2) Dissolve glycyrrhetinic acid CRS in dehydrated ethanol to produce a solution containing 1 mg per ml as the reference solution. Carry out the method for thin layer chromatography (Appendix Ⅵ B), using silica gel G mixed with sodium carboxymethylcellulose as the coating substance and a mixture of petroleum ether (30-60℃), benzene, ethyl acetate and glacial acetic acid (10∶20∶7∶0.5) as the mobile phase. Apply separately 5 μl of each of the test solution obtained under Identification test (1) and the reference solution to the plate. After developing and removal of the plate. dry in air, spray with 10% phosphomolybdic acid in ethanol and heat at 105℃ to the spot clear. The spot in the chromatogram obtained with the test solution corresponds in position and colour to the spot in the chromatogram obtained with the reference solution.

Other requirements Comply with the general requirements for granules (Appendix Ⅰ C).

Assay Carry out the method for high performance liquid chromatography (Appendix Ⅵ D).

Chromatographic system and system suitability Use octadecylsilane bonded silica gel as the stationary phase, a mixture of acetonitrile and water (11∶89) as the mobile phase. As detector a spectrophotometer set at 238 nm. The number of theoretical plates of the column is not less than 4000, calculated with the reference to the peak of geniposide.

Reference solution Dissolve a quantity of geniposide CRS, accurately weighed, in methanol to prepare a solution containing 20 μg per ml as the reference solution.

Test solution Pulverize a quantity of the granule, obtained under the test of weigh variation, to fine powder, weigh accurately 0.25 g, in a conical flask with stopper. Add accurately 25 ml of methanol, stopper well, weigh and ultrasonicate (power, 200 W; frequency, 40 kHz) for 20 minutes. Allow to stand to room temperature, weigh again and replenish the loss of weight with methanol. Mix thoroughly, filter and use the successive filtrate as the test solution.

Procedure Inject accurately 10 μl of each of the reference solution and the test solution into the column, and calculate the content.
It contents not less than 14.0 mg of geniposide ($C_{17}H_{24}O_{10}$) per pack, referred to Fructus Gardeniae.

Action To clear *heat* and purge *fire*, and induce urination and relieve stranguria.

Indications Stranguria and difficulty in micturition or anuria due to *damp-heat* in the urinary bladder with manifestations of frequent and painful urination with dribbling, distension in the lower abdomen and dry mouth and throat.

Usage and dosage 1 pack, 2 times a day; reduce the dosage

for children.

Precaution Contraindicated for pregnant women and debilitated patients.

Strength 10 g per pack

Storage Preserve in tightly closed containers.

Qingnao Jiangya Pian
(清脑降压片)

Qingnao Jiangya Tablets

Ingredients Radix Scutellariae 100 g; Spica Prunellae 60 g; Flos Sophorae (huaimi) 60 g; Magnetitum (calcined) 60 g; Radix Achyranthis Bidentatae 60 g; Radix Angelicae Sinensis 100 g; Radix Rehmanniae 40 g; Radix et Rhizoma Salviae Miltiorrhizae 40 g; Hirudo 20 g; Ramulus Uncariae cum Uncis 60 g; Semen Cassiae 100 g; Pheretima 20 g; Concha Margaritifera 40 g.

Procedure Pulverize Concha Margaritifera, Magnetitum, Radix Angelicae Sinensis and Ramulus Uncariae cum Uncis to fine powder and sift. Decoct Radix Scutellariae and other eight ingredients with water twice, 3 hours for the first time, 2 hours for the second time, combine the decoctions, filter, concentrate the filtrate to a thick extract in vacuum, add the above powder, mix well, make granules, dry, compress into 1000 tablets and coat with sugar.

Description Sugar-coated tablets with blackish-brown core; taste, slightly bitter.

Identification (1) Pulverize 10 tablets, removed sugar coats, to fine powder, add 20 ml of *n*-hexane, ultrasonicate for 30 minutes. Filter and concentrate the filtrate to about 0.5 ml as the test solution. Prepare a solution with 0.1 g of Radix Angelicae Sinensis reference drug and 10 ml of *n*-hexane as the reference drug solution in the same manner. Carry out the method for thin layer chromatography (Appendix Ⅵ B), using silica gel G mixed with sodium carboxymethylcellulose as the coating substance and a mixture of *n*-hexane and ethyl acetate (9∶1) as the mobile phase. Apply separately to the plate 5-10 μl of the test solution and 1 μl of the reference drug solution. After developing and removal of the plate, dry in air, examine under ultraviolet light at 365 nm. The fluorescent spots in the chromatogram obtained with the test solution correspond in position and colour to the spots in the chromatogram obtained with the reference drug solution.

(2) To 0.5 g of Semen Cassiae reference drug, add 10 ml of *n*-hexane, ultrasonicate for 30 minutes, filter and concentrate the filtrate to about 0.5 ml as the reference drug solution. Carry out the method for thin layer chromatography (Appendix Ⅵ B), using silica gel G mixed with sodium carboxymethylcellulose as the coating substance and the upper layer of a mixture of *n*-hexane, ethyl acetate and formic acid (10∶1∶1) as the mobile phase. Apply separately 5 μl of the reference drug solution and 10 μl of the test solution obtained under Identification test (1) to the plate. After developing and removal of the plate, dry in air, expose to ammonia vapour until the spots clear. The orange-red colour spots in the chromatogram obtained with the test solution correspond in position and colour to the spots in the chromatogram obtained with the reference drug solution.

Other requirements Comply with the general requirements for tablets (Appendix Ⅰ D).

Action To pacify the liver to restrain hyperactivity of *yang*.

Indications Dizziness due to hyperactivity of *liver-yang* with manifestations of headache, neck rigidity and hypertension.

Usage and dosage 4-6 tablets, 3 times a day.

Precaution Contraindicated for pregnant women.

Storage Preserve in tightly closed containers.

Qingning Wan
(清宁丸)

Qingning Pills

Ingredients Radix et Rhizoma Rhei 600 g; Semen Phaseoli Radiati 25 g; Herba Plantaginis 25 g; Rhizoma Atractylodis Macrocephalae (stir-baked) 25 g; Semen Glycinis 25 g; Rhizoma Pinelliae (processed) 25 g; Rhizoma Cyperi (processed with vinegar) 25 g; Folium Mori 25 g; Ramulus Persicae 5 g; Cor Bovis 50 g; Cortex Magnoliae Officinalis (processed with ginger) 25 g; Fructus Hordei Germinatus 25 g; Pericarpium Citri Reticulatae 25 g; Cacumen Platycladi 25 g.

Procedure Smash Radix et Rhizoma Rhei to small pieces, add 600 g of yellow rice wine, mix thoroughly in a container, stopper well, stew on a water bath until the wine is absorbed, take out and dry at a lower temperature. Pulverize the other twelve ingredients respectively, except Cor Bovis, and decoct for several times with a quantity of water until the decoction becomes tasteless. Discard the residue, combine the decoctions, filter, concentrate the filtrate properly, add Cor Bovis and stir thoroughly with the above Radix et Rhizoma Rhei in a suitable container. Stopper well and stew until the solution is absorbed. Take out and dry at a lower temperature, pulverize to fine powder and sift. To each 100 g of powder add 100-120 g of refined honey and a quantity of water to make water-honeyed pills; or to each 100 g of powder add 100-120 g of refined honey to make big honeyed pills.

Description Black big honeyed pills or brownish-black water-honeyed pills; taste, bitter.

Identification (1) To 0.3 g of the water-honeyed pills, pulverize to fine powder; or to 1.5 g of the big honeyed pills, cut into pieces. Add 10 ml of 25% sulfuric acid and 25 ml of chloroform, and heat under reflux on a water bath for 1 hour. Allow to cool and filter, separate the chloroform layer, and wash to neutral with water. Separate the chloroform layer, evaporate to dryness, and dissolve the residue in 1 ml of chloroform as the test solution. Prepare a solution with 0.15 g of Radix et Rhizoma Rhei reference drug in the same manner as the reference drug solution. Dissolve a quantity of emodin CRS in methanol to produce the reference solution containing 0.4 mg per ml. Carry out the method for thin layer chromatography (Appendix Ⅵ B), using silica gel G mixed with sodium carboxymethylcellulose as the coating substance and the upper layer of a mixture of petroleum ether (30-60℃), ethyl formate, and formic acid (15∶5∶1) as the mobile phase. Apply separately 5 μl of each of the reference drug solution, the reference solution and the test solution to the plate. After developing and removal of the plate, dry in air. A yellow spot in the chromatogram obtained with the test solution corresponds in position and colour to the spots in chromatogram obtained with the reference drug solution and the reference solution, expose the plate in ammonia vapour, the spot turns to red.

(2) To 5 g of the water-honeyed pills, pulverize to fine powder; or to 10 g of the big honeyed pills, cut into pieces, add 10 ml of water, disintegrate by heating gently, triturate well with 5 g of kieselguhr, heat to dryness, and triturate to

fine powder. Add 50 ml of ethyl acetate, and heat under reflux for 2 hour and filter. Evaporate the filtrate to dryness, and dissolve the residue in 1 ml of ethyl acetate as the test solution. Prepare a solution with 1.5 g of Rhizoma Cyperi reference drug in the same manner as the reference drug solution. Carry out the method for thin layer chromatography (Appendix Ⅵ B), using silica gel G mixed with sodium carboxymethylcellulose as the coating substance and a mixture of *n*-hexane, ethyl acetate, and diethylamine (20∶6∶1) as the mobile phase. Apply separately 3 μl of each of the reference drug solution and the test solution to the plate. After developing and removal of the plate, dry in air. Spray with 10% sulfuric acid in ethanol. Examine under ultraviolet light at 365 nm. The fluorescent spots in the chromatogram obtained with the test solution correspond in position and colour to the spots obtained with the reference drug solution.

Other requirements Comply with the general requirements for pills (Appendix Ⅰ A).

Assay Carry out the method for high performance liquid chromatography (Appendix Ⅵ D).

Chromatographic system and system suitability Use octadecylsilane bonded silica gel as the stationary phase and a mixture of methanol and 0.1% phosphoric acid (85∶15) as the mobile phase. As detector a spectrophotometer set at 254 nm. The number of theoretical plates of the column is not less than 3000, calculated with the reference to the peak of emodin.

Reference solution Weigh accurately a quantity of emodin CRS and chrysophanol CRS, dissolve in methanol to produce a mixture containing 15 μg of emodin per ml and 25 μg of chrysophanol per ml as the reference solution.

Test solution Pulverize a quantity of water-honeyed pills to fine powder, weigh accurately 0.1 g to a conical flask, add accurately 25 ml of a mixture of hydrochloric acid and methanol (1∶25) and weigh; or take a quantity of big honeyed pills, obtained under the test of weight variation, cut into pieces and mix well, weigh accurately 0.3 g to a beaker, add 3 ml of water, heat on a water bath in low temperature, disintegrate by stirring, mixed well with 0.5 g of kieselguhr, heat at 100℃ to dryness in a oven, transfer to a conical flask, wash the beaker and the glass rod with 3 ml of water, combine the washing to the conical flask, heat at 100℃ to dryness in a oven, add accurately 25 ml of a mixture of hydrochloric acid and methanol (1∶25), and ultrasonicate (power 300 W, frequency 50 kHz) for 10 minutes. Heat under reflux on a water bath for 2 hours, allow to cool, and replenish the loss of weight with a mixture of hydrochloric acid and methanol (1∶25). Mix well and filter. Measure accurately 5 ml of the successive filtrate to a evaporating disk, evaporate to dryness. Dissolve the residue in a quantity of methanol, transfer to a 5 ml volumetric flask, dilute to volume with methanol, mix well, filter, and use the successive filtrate as the test solution.

Procedure Inject accurately 10 μl of each of the reference solution and the test solution into the column, respectively, and calculate the content.

It contains not less than 6.0 mg of total amount of emodin ($C_{15}H_{10}O_5$) and chrysophanol ($C_{15}H_{10}O_4$) per gram for water-honeyed pills, and 31.5 mg for each big honeyed pill, referred to Radix and Rhizoma Rhei.

Action To clear *heat* and purge *fire*, and reduce swelling and relax bowels.

Indications Sore throat, sores on the mouth and tongue, dizziness, tinnitus, bloodshot eyes, toothache, fullness in the abdomen and constipation due to accumulation of *fire* in the interior.

Usage and dosage Big honeyed pill, 1 pill each time; water-honeyed pill, 6 g each time, 1-2 times a day.

Precaution Contraindicated for pregnant women.

Strength 6 g per pack for water-honeyed pills, 9 g for each big honeyed pill

Storage Preserve in tightly closed containers.

Qingqi Huatan Wan (清气化痰丸)

Qingqi Huatan Pills

Ingredients Radix Scutellariae (stir-baked with wine) 100 g; Semen Trichosanthis Pulveratum 100 g; Rhizoma Pinelliae (processed) 150 g; Arisaema cum Bile 150 g; Pericarpium Citri Reticulatae 100 g; Semen Armeniacae Amarum 100 g; Fructus Aurantii Immaturus 100 g; Poria 100 g.

Procedure Pulverize the above seven ingredients, except Semen Trichosanthis Pulveratum, to fine powder, mix thoroughly with Semen Trichosanthis Pulveratum and sift. Break 100 g of Rhizoma Zingiberis Recens to pieces, add a quantity of water, squeeze juice, make pills with the juice and dry.

Description Greyish-yellow watered pills; odour, slight; taste, bitter.

Identification Microscopical: Gelatinized starch masses colourless. Irregularly branched masses colourless, dissolved in chloral hydrate TS; hyphae colourless or pale brown, 4-6 μm in diameter. Raphides of calcium oxalate 32-144 μm long, occurring in mucilage cells or scattered. Prisms of calcium oxalate abundant in parenchyma. Reticulately striated cells elliptical, rectangular or polygonal, walls unlignified, meshes subrounded. Phloem fibres pale yellow, fusiform, with thick walls and fine pit canals. Stone cells orange, conchoidal, walls relatively thickened, pits distinct at the broader side.

Other requirements Comply with the general requirements for pills (Appendix Ⅰ A).

Action To clear the lung and resolve *phlegm*.

Indications Coughing with expectoration of copious yellow sticky *phlegm*, stuffiness in the chest and abdomen due to block of the lung by *phlegm-heat*.

Usage and dosage 6-9 g, 2 times a day; appropriate reduction of the dosage for children.

Storage Preserve in tightly closed containers.

Qingre Jiedu Koufuye (清热解毒口服液)

Qingre Jiedu Mixture

Ingredients Gypsum Fibrosum 670 g; Flos Lonicerae Japonicae 134 g; Radix Scrophulariae 107 g; Radix Rehmanniae 80 g; Fructus Forsythiae 67 g; Fructus Gardeniae 67 g; Herba Gueldenstaedtiae 67 g; Radix Scutellariae 67 g; Radix et Rhizoma Gentianae 67 g; Radix Isatidis 67 g; Rhizoma Anemarrhenae 54 g; Radix Ophiopogonis 54 g.

Procedure Warmly macerate Gypsum Fibrosum and other ingredients, except Flos Lonicerae Japonicae and Radix Scutellariae, with water for 1 hour, decoct twice (after boiling, allow to cool slightly, add Flos Lonicerae Japonicae and Radix Scutellariae), 1 hour for the first time, 40 minutes for the second time, filter. Combine the filtrates and concentrate to a thin extract with a relative density of about 1.17 at 80℃, add ethanol to a content of 65%-70% ethanol, store at a lower temperature for 48 hours, filter. Recover ethanol, add a quantity of flavoring agents and 5 g of active charcoal, heat for 30 minutes and filter. Add water to 1000 ml, filter, pack and sterilize.

Description A brownish-red liquid; taste; sweet, slightly bitter.

Identification (1) Evaporate 10 ml to dryness, dissolve the residue in 5 ml of ethanol, filter and concentrate the filtrate to about 2 ml as the test solution. Dissolve chlorogenic acid CRS in ethanol to produce a solution containing 1 mg per ml as the reference solution. Carry out the method for thin layer chromatography (Appendix Ⅵ B), using silica gel G as the coating substance and the upper layer of a mixture of butyl acetate, formic acid, and water (14∶5∶5) as the mobile phase. Apply 10 μl of each of the two solutions separately to the plate. After developing and removal of the plate and dry in air, examine under ultraviolet light at 365 nm, the fluorescent spot in the chromatogram obtained with the test solution corresponds in position and colour to the spot in the chromatogram obtained with the reference solution.

(2) Evaporate 10 ml of the mixture to dryness, dissolve the residue in 2 ml of acetone, use the supernatant as the test solution. Dissolve geniposide CRS in acetone to produce a solution containing 0.5 mg per ml as the reference solution. Carry out the method for thin layer chromatography (Appendix Ⅵ B), using silica gel G as the coating substance and a mixture of chloroform and methanol (3∶1) as the mobile phase. Apply 10 μl of each of the two solutions separately to the plate. After developing and removal of the plate and dry in air, spray with 50% sulfuric acid in ethanol, heat at 100℃ to the spots clear. The spot in the chromatogram obtained with the test solution corresponds in position and colour to the spot in the chromatogram obtained with the reference solution.

(3) To 20 ml of the mixture, extract by shaking with three 20-ml quantities of ethyl acetate, combine the ethyl acetate extracts, evaporate to dryness, and dissolve the residue in 5 ml of 30% ethanol. Apply to a column (1 cm in diameter, 24 cm long) packed with macroporous resin D101, pre-elute with 50 ml of 30% ethanol, discard the eluates, and elute again with 50 ml of dilute ethanol. Collect the eluates, concentrate to dryness, and dissolve the residue in 1 ml of methanol as the test solution. Dissolve a quantity of forsythin CRS in methanol to produce a solution containing 0.25 mg per ml as the reference solution. Carry out the method for thin layer chromatography (Appendix Ⅵ B), using silica gel G as the coating substance and a mixture of chloroform, methanol, and glacial acetic acid (17∶2∶1) as the mobile phase. Apply separately 4 μl of each of the reference solution and the test solution to the plate. After developing and removal the plate, dry in air. Spray witn 5% vanillin in sulfuric acid, and heat at 105℃ to the spots clear. The spot in the chromatogram obtained with the test solution corresponds in position and colour to the spot in chromatogram obtained with the reference solution.

(4) To 40 ml of the mixture, extract by shaking with three 30-ml quantities of *n*-butanol saturated with water, combine the *n*-butanol extracts, and evaporate to dryness on a water bath. Dissolve the residue in 20 ml of water, add 2 ml of hydrochloric aicd, heat under reflux for 1 hour, and allow to cool. Extract by shaking with two 20-ml quantities of toluene, combine the toluene extracts, and evaporate to dryness on a water bath. Dissolve the residue in 1 ml of toluene as the test solution. Dissolve a quantity of sarsasapogenin CRS in toluene to produce a solution containing 5 mg per ml as the reference solution. Carry out the method for thin layer chromatography (Appendix Ⅵ B), using silica gel G as the coating substance and a mixture of toluene and acetone (9∶1) as the mobile phase. Apply separately 15 μl of the test solution and 10 μl of the reference solution to the plate. After developing and removal the plate, dry in air. Spray with 5% vanillin in sulfuric acid, heat at 105℃ to the spots clear. The spot in the chromatogram obtained with the test solution corresponds in position and colour to the spot in chromatogram obtained with the reference solution.

(5) To 40 ml of the mixture, add 2 ml of hydrochloric acid, boil for 5 minutes, allow to cool, extract by shaking with 30 ml of chloroform, separate the chloroform extract, evaporate to dryness, and dissolve the residue in 1 ml of chloroform as the test solution. To 1 g of Radix Ophiopogonis reference drug, decoct with 20 ml of water for 10 minutes, filter, add 0.5 ml of hydrochloric acid, and prepare a solution in the same manner as the reference drug solution. Carry out the method for thin layer chromatography (Appendix Ⅵ B), using silica gel G as the coating substance and a mixture of chloroform and acetone (4∶1) as the mobile phase. Apply separately 5 μl of each of the reference solution and the test solution to the plate. After developing and removing the plate, and dry in air. Spray with 10% sulfuric acid in ethanol, heat at 105℃ to the spots clear. The spots in the chromatogram obtained with the test solution correspond in position and colour to the spots in chromatogram obtained with the reference drug solution.

pH value 4.5-6.5 (Appendix Ⅷ G).

Other requirements Comply with the general requirements for mixtures (Appendix Ⅰ J).

Assay Carry out the method of high performance liquid chromatography (Appendix Ⅵ D).

Chromatographic system and system suitability Use octadecylsilane bonded silica gel as the stationary phase and a mixture of methanol, water and phosphoric acid (50∶50∶0.3) as the mobile phase. As detector a spectrophotometer set at 276 nm. The number of theoretical plates of the column is not less than 1000, calculated with the reference to the peak of baicalin.

Reference solution Weigh accurately a quantity of baicalin CRS, dissolve in 70% ethanol to produce a solution containing 20 μg mg per ml as the reference solution.

Test solution Measure accurately 2 ml of the mixture to a 100 ml volumetric flask, add a quantity of 70% ethanol, shake well, dilute with 70% ethanol to volume, shake well, allow to stand, filter and use the successive filtrate as the test solution.

Procedure Inject accurately 10 μl of each of the reference solution and the test solution into the column, respectively, and calculate the content.

It contains not less than 1.0 mg of baicalin ($C_{21}H_{18}O_{11}$) per ml, referred to Radix Scutellariae.

Action To clear *heat* and *toxicity*.

Indications Fever, red complexion, irritability, thirst and swollen painful throat due to accumulated *toxic-heat*; influenza, upper respiratory tract infection with above symptoms.

Usage and dosage 10-20 ml, 3 times a day, appropriate reduction of the dosage for children; or follow doctor's advice.

Strength 10 ml per phial

Storage Preserve in tightly closed containers.

Qingwei Huanglian Wan (Damiwan) (清胃黄连丸，大蜜丸)

Qingwei Huanglian Pills (Big Honeyed Pills)

Ingredients Rhizoma Coptidis 80 g; Gypsum Fibrosum 80 g; Radix Platycodonis 80 g; Radix et Rhizoma Glycyrrhizae 40 g; Rhizoma Anemarrhenae 80 g; Radix Scrophulariae 80 g; Radix Rehmanniae 80 g; Cortex Moutan 80 g; Radix Trichosanthis 80 g; Fructus Forsythiae 80 g; Fructus Gardeniae 200 g; Cortex Phellodendri 200 g; Radix Scutellariae 200 g; Radix Paeoniae Rubra 80 g.

Procedure Pulverize the above fourteen ingredients to fine powder, sift and mix well. To each 100 g of the powder add 110-130 g of refined honey to make big honeyed pills.

Description Brown big honeyed pills; taste, slightly sweet, then bitter.

Identification (1) Microscopical: Parenchyma greyish-brown to blackish-brown, cells mostly shrunken, and each containing a brown nucleus-like mass. Fibre bundles bright yellow surrounded by cells containing prisms of calcium oxalate, forming crystal fibres; walls of crystal cells lignified and thickened. Phloem fibres bundles bright yellow, walls slightly thickened, pits distinct. Fibres pale yellow, fusiform, walls thickened, with fine pit-canals. Fibre bundles almost colourless, surrounded by parenchymatous cells containing prisms of calcium oxalate, forming crystal fibres. The upper and lower layers of the fibres in endocarp crisscross, fibres short fusiform. Needle crystals of calcium oxalate in bundles or scattered, 26-110 μm long. Stone cells of testa yellow or pale brown, mostly broken, long-polygonal, rectangular or irregular when intact; walls thickened, with large rounded pits, lumina brownish-red. Stone cells yellowish-brown or colourless, subrectangular, subrounded or irregular, about 94 μm in diameter. Irregular laminate crystals colourless, with straight striations.

(2) Macerate 5 g of the pills, cut into pieces, in 50 ml of methanol overnight, grind for disintegrating, ultrasonicate for 30 minutes, filter, recover the methanol to dryness. Dissolve the residue with 5 ml of water, apply to a column of macroporous resin D101 (1.5 cm in diameter, 20 cm in length), wash with 100 ml of water, discard the washing, elute with 100 ml of ethanol, collect the eluate and evaporate to dryness. Dissolve the residue with 2 ml of methanol, filter and use the filtrate as the test solution. To 1.2 g of Fructus Gardeniae reference drug add 10 ml of methanol, ultrasonicate for 20 minutes, filter and use the filtrate as the reference drug solution. Dissolve geniposide CRS in methanol to produce a solution containing 1 mg per ml as the reference solution. Carry out the method for thin layer chromatography (Appendix Ⅵ B), using silica gel G as the coating substance and the lower layer of a mixture of chloroform, ethyl acetate, methanol, and water (15∶40∶22∶10) as the mobile phase. Apply 2 μl of each of the three solutions to the plate. After developing and removal of the plate, dry in air. Spray with 5% sulfuric acid in ethanol, heat if necessary to spots clear. The main spots in the chromatogram obtained with the test solution correspond in position and colour to the spots in the chromatogram obtained with the reference drug solution. The spot in the chromatogram obtained with the test solution corresponds in position and colour to the spot in the chromatogram obtained with the reference solution.

(3) Macerate 5 g of the pills, cut into pieces, in 25 ml of methanol in a stopper conical flask for a moment, mash, filter and discard the filtrate. Add 25 ml of methanol to the drug residue, ultrasonicate for 30 minutes, filter, evaporate the filtrate to dryness and dissolve the residue in 5 ml of methanol as the test solution. Dissolve baicalin CRS in methanol to produce a solution containing 1 mg per ml as the reference solution. Carry out the method for thin layer chromatography (Appendix Ⅵ B), using silica gel G mixed with sodium carboxylmethylcellulose prepared with 4% solution of sodium acetate as the coating substance, and a mixture of ethyl acetate, butanone, formic acid and water (5∶3∶1∶1) as the mobile phase. Apply 3 μl of the test solution and 4 μl of the reference solution to the plate. After developing and removal of the plate, dry in air. Spray with a 5% solution of ferric chloride in ethanol. The spot in the chromatogram obtained with the test solution corresponds in position and colour to the spot in the chromatogram obtained with the reference solution.

(4) Macerate 9 g of the pills, cut into pieces, in 50 ml of methanol overnight, grind for disintegrating, ultrasonicate for 30 minutes, filter and recover the methanol to dryness. Dissolve the residue with 10 ml of water, apply to a column of macroporous resin D101 (2.5 cm in internal diameter, 28 cm long), wash with water to the washing colourless, discard the aqueous washing, elute with ethanol, collect 80 ml of the colouring part, add 8 ml of hydrochloric acid, heat under reflux for 1 hour, adjust to neutral with 40% solution of sodium hydroxide. Concentrate to about 10 ml, add 10 ml of water, extract with 25 ml of benzene with shaking, separate the benzene layer, recover the benzene to dryness and dissolve in 0.5 ml of benzene as the test solution. Dissolve sarsasapogenin CRS in benzene to produce a solution containing 1 mg per ml as the reference solution. Carry out the method for thin layer chromatography (Appendix Ⅵ B), using silica gel G as the coating substance and a mixture of benzene and acetone (9∶1) as the mobile phase. Apply separately 10 μl of the test solution and 2 μl of the reference solution to the plate. After developing and removal of the plate, dry in air. Spray with 5% vanillin in sulfuric acid, heat at 80℃ to spots clear. The spot in the chromatogram obtained with the test solution corresponds in position and colour to the spot in the chromatogram obtained with the reference solution.

Other requirements Comply with the general requirements for pills (Appendix Ⅰ A).

Assay Weigh accurately 0.8 g of the pills, obtained in the test of weight variation, cut into pieces, in a stopper conical flask, add accurately 25 ml of a mixture of hydrochloric acid and methanol (1∶100), weigh and stand overnight. Shake for disintegrating, ultrasonicate (power, 250 W; frequency, 33 kHz) for 45 minutes, allow to cool, weigh again and replenish the loss of weight with methanol, shake well, filter and use the filtrate as the test solution. Dissolve berberine hydrochloride CRS, weighed accurately, in a mixture of hydrochloric acid and methanol (1∶100) to produce a solution containing 60 μg per ml as the reference solution. Carry out the method for thin layer chromatography (Appendix Ⅵ B), using silica gel G as the coating substance and a mixture of benzene, ethyl acetate, methanol, isopropanol and concentrated ammonia TS (12∶6∶3∶3∶1) as the mobile phase, pre-saturated with concentrated ammonia TS. Apply accurately 4 μl of the test solution, 2 μl and 4 μl of the reference solutions separately to the plate. After developing and removal of the plate, dry in air. Carry out the method for thin layer chromatography (Appendix Ⅵ B, thin layer chromato-graphic scanning method), scan at the wavelength: $\lambda_S = 340$ nm. Measure the integration value of absorbance of the test solution and

the reference solution and calculate.
It contains not less than 11.7 mg of berberine hydrochloride ($C_{20}H_{18}ClNO_4$) per pill, referred to Radix Coptidis and Cortex Phellodendri.

Action To clear the stomach and purge *fire*, and relieve *toxicity* and reduce swelling.

Indications Sores on the mouth and tongue, or swollen painful gums and throat due to extremely abundant *fire* in the lung and stomach.

Usage and dosage 1-2 pills, 2 times a day.

Precaution Be cautious about pregnant women.

Strength 9 g per pill

Storage Preserve in tightly closed containers.

Qingwei Huanglian Wan (Shuiwan) (清胃黄连丸，水丸)

Qingwei Huanglian Pills (watered pills)

Ingredients Rhizoma Coptidis 80 g; Gypsum Fibrosum 80 g; Radix Platycodi 80 g; Radix et Rhizoma Glycyrrhizae 40 g; Rhizoma Anemarrhenae 80 g; Radix Scrophulariae 80 g; Radix Rehamnniae 80 g; Cortex Moutan 80 g; Radix Trichosanthis 80 g; Fructus Forsythiae 80 g; Fructus Gardeniae 200 g; Cortex Phellodendri 200 g; Radix Scutellariae 200 g; Radix Paeoniae Rubra 80 g.

Procedure Pulverize the above fourteen ingredients to fine powder, sift, mix thoroughly, make pills with water and dry.

Description Yellow to dark yellow watered pills; taste, slightly bitter.

Identification (1) Microscopical: Parenchyma greyish-brown to blackish-brown, cells mostly shrunken, and each containing a brown nucleus-like mass. Fibre bundles bright yellow surrounded by cells containing prisms of calcium oxalate, forming crystal fibres; walls of crystal cells lignified and thickened. Fibre bundles bright yellow, walls slightly thickened, pits distinct. Bast fibres pale yellow, fusiform, walls thickened, with fine pit-canals. Fibre bundles almost colourless, surrounded by parenchymatous cells containing prisms of calcium oxalate, forming crystal fibres. The upper and lower layers of the fibres in endocarp crisscross, fibres short fusiform. Needle crystals of calcium oxalate in bundles or scattered, 26-110 μm long. Stone cells of testa yellow or pale brown, mostly broken, long-polygonal, rectangular or irregular when intact; walls thickened, with large rounded pits, lumina brownish-red. Stone cells yellowish-brown or colourless, subrectangular, subrounded or irregular, about 94 μm in diameter. Irregular laminate crystals colourless, with straight striations.
(2) To 1 g of the pills, pulverized to powder, add 30 ml of methanol, ultrasonicate for 30 minutes, filter, concentrate the filtrate to almost dryness, dissolve in 2 ml of methanol as the test solution. Dissolve geniposide CRS in methanol to produce a solution containing 1 mg per ml as the reference solution. Carry out the method for thin layer chromatography (Appendix VI B), using silica gel G as the coating substance and a mixture of *n*-butanol, glacial acetate acid and water (7:1:2) as the mobile phase. Apply separately 5 μl of the test solution and 3 μl of the reference solution to the plate. After developing and removal of the plate, dry in a current of hot air, spray with 5% vanillin in sulfuric acid and heat to visualize if necessary. The spot in the chromatogram obtained with the test solution corresponds in position and colour to the spot in the chromatogram obtained with the reference solution.
(3) Dissolve baicalin CRS in methanol to produce a solution containing 1 mg per ml as the reference solution. Carry out the method for thin layer chromatography (Appendix VI B), using silica gel G as the coating substance and a mixture of *n*-butanol, glacial acetate acid, and water (7:1:2) as the mobile phase. Apply separately to the plate 3 μl of the reference solution and 5 μl of the test solution obtained under Identification test (2). After developing and removal of the plate, dry in a current of hot air, spray with a 2% solution of ferric chloride in ethanol. The spot in the chromatogram obtained with the test solution corresponds in position and colour to the spot in the chromatogram obtained with the reference solution.
(4) Heat under reflux 10 g of the pills, pulverized to fine powder, with 40 ml of ether for 15 minutes and filter. Expel ether remained from the drug residue, add 40 ml of ethanol and heat under reflux for 1 hour. Filter, measure 20 ml of the filtrate, add 2 ml of hydrochloric acid and continue heating under reflux for 1 hour. Concentrate on a water bath to about 5 ml, add 10 ml of water, extract with 20 ml of benzene by shaking. Separate the benzene layer, wash with 10 ml of 1% solution of sodium hydroxide and wash with three 10-ml quantities of water successively. Recover the benzene extract to dryness, and add 1 ml of benzene to dissolve the residue as the test solution. Dissolve sarsasapogenin CRS in benzene to produce a solution containing 1 mg per ml as the reference solution. Carry out the method for thin layer chromatography (Appendix VI B), using silica gel G as the coating substance and a mixture of benzene and acetone (9:1) as the mobile phase. Apply separately 5 μl of each of the two solutions to the plate. After developing and removal of the plate, dry in air, spray with a 5% solution of vanillim in sulfuric acid (heat to visualize if necessary). The spot in the chromatogram obtained with the test solution corresponds in position and colour to the spot in the chromatogram obtained with the reference solution.

Other requirements Comply with the general requirements for pills (Appendix I A).

Assay Grind 5 g of the pills to fine powder. Weigh accurately 0.3 g in a stopper conical flask, add accurately 25 ml of a mixture of hydrochloric acid and methanol (1:100), stopper, weigh and stand overnight. Ultrasonicate (power, 250 W; frequency, 33 kHz) for 45 minutes, allow to cool, weigh again and replenish the loss of weight with methanol, shake well, filter and use the successive filtrate as the test solution. Dissolve berberine hydrochloride CRS, weighed accurately, in a mixture of hydrochloric acid and methanol (1:100) to produce a solution containing 60 μg per ml as the reference solution. Carry out the method for thin layer chromatography (Appendix VI B), using silica gel G as the coating substance and a mixture of benzene, ethyl acetate, methanol, isopropanol, and concentrated ammonia TS (12:6:3:3:1) as the mobile phase, pre-equilibrated with concentrated ammonia TS. Apply accurately 4 μl of the test solution, 2 μl and 4 μl of the reference solutions to the plate. After developing and removal of the plate, dry in air. Carry out the method of thin layer chromatography (Appendix VI B, thin layer chromatographic scanning method), scan at the wavelength: $\lambda_S = 340$ nm. Measure the integration value of absorbance of the test solution and the reference solution and calculate.
It contains not less than 3.4 mg of berberine hydrochloride ($C_{20}H_{18}ClNO_4$) per gram, referred to Rhizoma Coptidis and Cortex Phellodendri.

Action To clear the stomach and purge *fire*, and relieve

toxicity and reduce swelling.

Indications Sores on the mouth and tongue, or swollen painful gums and throat due to extremely abundant *fire* in the lung and stomach.

Usage and dosage 9 g, 2 times a day.

Precaution Be cautious about pregnant women.

Storage Preserve in tightly closed containers.

Qingwen Jiedu Wan (清瘟解毒丸)

Qingwen Jiedu Pills

Ingredients Folium Isatidis 100 g; Fructus Forsythiae 75 g; Radix Scrophulariae 100 g; Radix Trichosanthis 100 g; Radix Platycodonis 75 g; Fructus Arctii (stir-baked) 100 g; Rhizoma et Radix Notopterygii 75 g; Radix Saposhnikoviae 50 g; Radix Puerariae 100 g; Radix Bupleuri 50 g; Radix Scutellariae 100 g; Radix Angelicae Dahuricae 50 g; Rhizoma Chuanxiong 50 g; Radix Paeoniae Rubra 50 g; Radix Glycyrrhizae 25 g; Herba Lophatheri 100 g.

Procedure Pulverize the above sixteen ingredients to fine powder, sift and mix well. To each 100 g of the powder add 150-170 g of refined honey to make big honeyed pills.

Description Blackish-brown big honeyed pills; odour, slightly aromatic; taste, sweet, bitter.

Identification (1) Microscopical: Epidermal cells narrow and long, anticlinal walls deep sinuous, with stomata, guard cells dumbbell-shaped; nonglandular hairs unicellular, with an rounded base. Stone cells of endocarp sharp fusiform or oblong in surface view, compactly parquet, subrectangular or slat in lateral view, with thickened and lignified walls, pits elongated. Stone cells yellowish-brown or colourless, subrectangular, subrounded or irregular, with well-marked striations up to 94 μm in diameter. Fibre bundles surrounded by parenchymatous cells containing prisms of calcium oxalate, forming crystal fibres. Phloem fibres pale yellow, fusiform, walls thickened, with fine pit-canals. Upper and lower layers of fibres in endocarp crisscrossed, fibres short fusiform. Bordered pitted vessels large, frequently broken, some bordered pits hexangular or rhombic, closely arranged. Anastomosing laticiferous tubes 14-25 μm in diameter, containing pale yellow granules. Vittae containing golden-yellow secretion.

(2) Triturate well 9 g of the pills, cut into pieces, with 3 g of kieselguhr, add 20 ml of ether, ultrasonicate for 5-10 minutes, filter, and remain the residue drug for later use. Evaporate the filtrate to dryness, and add 1 ml of chloroform to dissolve the residue as the test solution. Dissolve indigotin CRS in chloroform to produce a solution containing 1 mg per ml as the reference solution. Carry out the method for thin layer chromatography (Appendix Ⅵ B), using silica gel G as the coating substance and a mixture of benzene, chloroform and acetone (5∶4∶1) as the mobile phase. Apply separately to the plate 5 μl of each of the two solutions. After developing and removal of the plate, dry in air, the blue spot in the chromatogram obtained with the test solution corresponds in position and colour to the spot in the chromatogram obtained with the reference solution.

(3) Expel ether from the residue drug obtained under Identification test (2), add 20 ml of ethyl acetate, ultrasonicate for 20 minutes and filter. Evaporate the filtrate to dryness and dissolve the residue in 1 ml of methanol as the test solution. Dissolve puerarin CRS in methanol to produce a solution containing 1 mg per ml as the reference solution. Carry out the method for thin layer chromatography (Appendix Ⅵ B), using silica gel G as the coating substance and a mixture of chloroform, methanol and water (28∶10∶1) as the mobile phase. Apply separately 5 μl of the test solution and 2 μl of the reference solutions to the plate. After developing and removal of the plate, dry in air, examine under ultraviolet light at 365 nm, the brilliant green fluorescent spot in the chromatogram obtained with the test solution corresponds in position and colour to the spot in the chromatogram obtained with the reference solution.

(4) Chip 5 g of the pills into pieces, triturate with 2 g of kieselguhr, add 50 ml of 70% ethanol, heat under reflux for 1 hour. Allow to cool, filter, and evaporate the filtrate to dryness. Dissolve the residue in a quantity of water, apply to a prepacked polyamide column (60-80 mesh, 1 g, 10-15 mm in internal diameter), elute with 80 ml of water, discard the water solution, and then elute with 50 ml of 50% methanol. Collect the methanolic eluates, evaporate to dryness and dissolve the residue in 1 ml of methanol as the test solution. Dissolve astragaloside Ⅳ CRS in methanol to produce a solution containing 1 mg per ml as the reference solution. Carry out the method for thin layer chromatography (Appendix Ⅵ B), using polyamide film as the coating substance and a mixture of ethyl acetate, butanone, acetic acid and water (10∶7∶5∶1) as the mobile phase. Apply separately 4 μl of the test solution and 2 μl of the reference solution to the plate. After developing and removal of the plate, dry in air, spray with 1% ferric chloride in ethanol. The spot in the chromatogram obtained with the test solution corresponds in position and colour to the spot in the chromatogram obtained with the reference solution.

(5) Chip 5 g of the pills into pieces, triturate with 2 g of kieselguhr, add 50 ml of dehydrated ethanol, and heat under reflux for 1 hour. Filter, concentrate the filtrate to 1 ml, add 2 g of neutral aluminium oxide, mix well, dry in a oven, and apply to a column prepacked with neutral aluminium oxide (100-200 mesh, 3 g, 10-15 mm in internal diameter). Elute with 50 ml of ethanol, collect the eluates, evaporate to dryness and dissolve the residue in 1 ml of dehydrated ethanol as the test solution. Dissolve arctiin CRS in ethanol to produce a solution containing 1 mg per ml as the reference solution. Carry out the method for thin layer chromatography (Appendix Ⅵ B), using silica gel G as the coating substance and a mixture of chloroform, methanol and water (40∶8∶1) as the mobile phase. Apply separately 5 μl of the test solution and 2 μl of the reference solution to the plate. After developing and removal of the plate, dry in air, spray with 10% sulfuric acid in ethanol, and heat at 105℃ to the spots clear. The spot in the chromatogram obtained with the test solution corresponds in position and colour to the spot in the chromatogram obtained with the reference solution.

Other requirements Comply with the general requirements for pills (Appendix Ⅰ A).

Assay Carry out the method for high performance liquid chromatography (Appendix Ⅵ D).

Chromatographic system and system suitability Use octadecylsilane bonded silica gel as the stationary phase and a mixture of methanol, water and phosphoric acid (47∶53∶0.2) as the mobile phase. As detector a spectrophotometer set at 280 nm. Maintain the column temperature at 40℃. The number of theoretical plates of the column is not less than 2500, calculated with the reference to the peak of baicalin.

Reference solution Dissolve a quantity of baicalin CRS, accurately weighed, in methanol to prepare a solution containing 60 μg per ml as the reference solution.

Test solution Cut a quantity of the pills, obtained under the test of weight variation, into pieces, mix well, weigh accurately 1.5 g, triturate with 1.5 g of kieselguhr, transfer to a stopper conical flask, add accurately 50 ml of 70% ethanol, stopper well, and weigh. Ultrasonicate (power 250 W, frequency 50 kHz) for 30 minutes, cool, weigh again, replenish the loss of weight with 70% ethanol, and shake well. Filter and used the successive filtrate as the test solution.

Procedure Inject accurately 5 μl of each of the reference solution and the test solution into the column, respectively, and calculate the content.
It contains not less than 20.0 mg of baicalin ($C_{21}H_{18}O_{11}$) per pill, referred to Radix Scutellariae.

Action To clear *toxins* of epidemic disease.

Indications Aversion to *cold*, high fever, headache, absence of sweat, thirst, dry throat, mumps and infectious swollen head due to seasonal epidemic disease.

Usage and dosage 2 pills, 2 times a day; appropriate reduction of the dosage for children.

Strength 9 g per pill

Storage Preserve in tightly closed containers.

Qingxuan Wan
(清眩丸)

Qingxuan Pills

Ingredients Rhizoma Chuanxiong 200 g; Radix Angelicae Dahuricae 200 g; Herba Menthae 100 g; Spica Schizonepetae 100 g; Gypsum Fibrosum 100 g.

Procedure Pulverize the above five ingredients to fine powder, sift, mix thoroughly. To each 100 g of the powder add 110-130 g of refined honey to make big honeyed pills.

Description Blackish-brown big honeyed pills; odour, slightly aromatic; taste, slightly sweet, then pungent and cool.

Identification (1) Microscopical: Compound starch granules consisting of 8-12 components. Spiral or reticular-spiral vessels 14-50 μm in diameter. Glandular scales with a 8-celled head, oblate, up to about 90 μm in diameter, and a unicellular and short stalk, Epidermal cells of calyx pale yellow, anticlinal walls sinuous. Irregular plate crystals colourless, with straight striations.
(2) Grind well 6 g of the pills, cut into pieces, with 3 g of kieselguhr, add 20 ml of petroleum ether (60-90℃), stopper well, shake frequently and macerate overnight. Filter and concentrate the filtrate to about 1 ml as the test solution. Prepare separately solutions with 1 g of each of Rhizoma Chuanxiong reference drug and Radix Angelicae Dahuricae reference drug as the reference drug solutions in the same manner. Carry out the method for thin layer chromatography (Appendix Ⅵ B), using silica gel G as the coating substance and a mixture of *n*-hexane and ethyl acetate (17∶3) as the mobile phase. Apply separately to the plate 20 μl of each of the three solutions. After developing and removal of the plate, dry in air, examine under ultraviolet light at 365 nm, the brilliant blue fluorescent spots in the chromatogram obtained with the test solution correspond in position and colour to the spots in the chromatogram obtained with the Rhizoma Chuanxiong reference drug solution. The two yellow fluorescent spots in the chromatogram obtained with the test solution correspond in position and colour to the spots in the chromatogram obtained with the Radix Angelicae Dahuricae reference drug solution.

Other requirements Comply with the general requirements for pills (Appendix Ⅰ A).

Assay Carry out the method for high performance liquid chromatography (Appendix Ⅵ D).

Chromatographic system and system suitability Use octadecylsilane bonded silica gel as the stationary phase and a mixture of methanol and water (63∶37) as the mobile phase. As detector a spectrophotometer set at 248 nm, maintain the column temperature at 40℃. The number of theoretical plates of the column is not less than 2500, calculated with the reference to the peak of imperatorin.

Reference solution Weigh accurately a quantity of imperatorin CRS, dissolve in methanol to produce a reference solution containing 10 μg per ml.

Test solution Cut a quantity of big honeyed pills, obtained under the test of weight variation, into pieces, weigh accurately about 1 g to a stopper conical flask. Add accurately 25 ml of methanol, stopper well and weigh, ultrasonicate (power 250 W, frequency 33 kHz) for 45 minutes. Allow to cool, weigh again, replenish the loss of weight with methanol, mix well and filter, use the successive filtrate as the test solution.

Procedure Inject accurately 5 μl of the reference solution and 10 μl of the test solution into the column, respectively, and calculate the content.
It contains not less than 0.40 mg of imperatorin ($C_{16}H_{14}O_4$) per pill, referred to Radix Angelicae Dahuricae.

Action To disperse *wind* and clear *heat*.

Indications Dizziness, headache or migraine, stuffy nose and toothache due to *wind-heat*.

Usage and dosage 1-2 pills, 2 times a day.

Strength 6 g per pill

Storage Preserve in tightly closed containers.

Qingyan Wan
(清咽丸)

Qingyan Pills

Ingredients Radix Platycodonis 100 g; Gypsum Rubrum 100 g; Herba Menthae 100 g; Fructus Chebulae (removed from seed) 100 g; Radix et Rhizoma Glycyrrhizae 100 g; Fructus Mume (removed from seed) 100 g; Indigo Naturalis 20 g; Borax (calcined) 20 g; Borneolum Syntheticum 20 g.

Procedure Grind Indigo Naturalis and Borneolum Syntheticum to fine powder. Pulverize Radix Platycodi and other six ingredients to fine powder. Triturate the above two powder together, sift and mix thoroughly. To each 100 g of the powder add 100-130 g of refined honey to make small honeyed pills or big honeyed pills.

Description Blackish-brown big honeyed pills; odour, cool; taste, sweet, sour, and slightly bitter.

Identification (1) Heat under reflux 12 g of the pills, cut into pieces, in 50 ml of chloroform for 3 hours, filter and concentrate the filtrate to about 1 ml as the test solution. Dissolve indigotin CRS and indirubin CRS in chloroform to produce a mixture containing 1 mg of each per ml as the reference solution. Carry out the method for thin layer chromatography (Appendix Ⅵ B), using silica gel G as the coating substance and a mixture of chloroform and ethanol

(9∶1) as the mobile phase. Apply separately to the plate 3 μl of each of the two solutions. After developing and removing of the plate, dry in air, the spots in the chromatogram obtained with the test solution correspond in position and colour to the spots in the chromatogram obtained with the reference solution.

(2) Cut 2 g of the pills into pieces, triturate well with 1 g of kieselguhr, add 30 ml of dehydrated ethanol, and ultrasonicate for 30 minutes and filter. Concentrate the filtrate to 1 ml as the test solution. Prepare a solution with 0. 2 g of Fructus Chebulae reference drug in the same manner as the reference drug solution. Dissolve a quantity of Gallic acid CRS in dehydrated ethanol to prepare a reference solution containing 1 mg per ml. Carry out the method for thin layer chromatography (Appendix Ⅵ B), using silica gel G as the coating substance and a mixture of toluene, ethyl acetate, formic acid, and water (7∶10∶3∶4) as the mobile phase. Apply separately 5 μl of the test solution and 4 μl of each of the reference solution and the reference drug solution to the plate. After developing and removing the plate, dry in air, and spray with 2% ferric chloride in ethanol. The spots in the chromatogram obtained with the test solution correspond in position and colour to the spots in chromatogram obtained with the reference solution and the reference drug solution.

(3) Cut 3 g of the pills into pieces, triturate well with 1. 5 g of kieselguhr, add 10 ml of ethyl acetate, and ultrasonicate for 30 minutes in a ice water bath. Centrifuge, and use the supernatant as the test solution. Dissolve a quantity of menthol CRS in ethyl acetate to prepare a reference solution containing 2 mg per ml. Carry out the method for gas chromatography (Appendix Ⅵ E), use the chromatography system under Assay. Inject 1 μl of each of the test solution and the reference solution, respectively, into the column, the retention time of the peaks obtained with the test solution and the reference solution is concordant with each other.

Other requirements Comply with the general requirements for pills (Appendix Ⅰ A).

Assay Carry out the method for gas chromatography (Appendix Ⅵ E).

Chromatographic system and system suitability Use an elasticity quartz capillary column (30 m long, 0. 25 mn in diameter, 0. 25 μm in film thickness) packed with polyethylene glycol (PEG)-M as the stationary phase, maintain the column temperature at 120℃. The number of theoretical plates of the column is not less than 40000, calculated with the reference to the peak of (±)-borneol.

Reference solution Weigh accurately a quantity of a mixture of (±) borneol and (±) isoborneol CRS, dissolve in ethyl acetate to produce a reference solution containing 0. 8 mg per ml.

Test solution Weigh accurately 1 g of the small honeyed pills, or cut the big honeyed pills, obtained under the test of weight variation, into pieces, weigh accurately about 1 g, and triturate well with 0. 5 g of kieselguhr. Add accurately 10 ml of ethyl acetate, stopper well, and weigh. Ultrasonicate (power, 250 W; frequency, 33 kHz) for 30 minutes, cool, weigh again, replenish the loss of weight with ethyl acetate, mix well, centrifuge for 5 minutes at 3000 round per minute, and use the supernatant as the test solution.

Procedure Inject accurately 1 μl of each of the reference solution and 10 μl of the test solution into the column, respectively, and calculate the content with the total amount of (±)-borneol and (±)-isoborneol.

It contains not less than 5. 6 mg of the total amount of (±)-borneol and (±)-isoborneol ($C_{10}H_{18}O$) per gram for small honeyed pills, and 33. 6 mg per big honeyed pills.

Action To clear *heat* to relieve sore throat, and promote fluid production to stop thirst.

Indications Swollen painful throat, hoarseness, dry mouth and tongue and discomfort in the throat due to excessive *heat* in the lung and stomach.

Usage and dosage 1 pill, 2-3 times a day; or kept in mouth to dissolve gradually.

Precaution Avoid smoking, wine, pungent and spicy foods.

Strength 6 g per pill

Storage Preserve in tightly closed containers.

Qingyin Wan
(清音丸)

Qingyin Pills

Ingredients Fructus Chebulae; Bulbus Fritillariae Cirrhosae; Bai Yao Jian; Fructus Mume; Radix Puerariae; Poria; Radix Glycyrrhizae; Radix Trichosanthis.

Procedure Pulverize the above eight ingredients to fine powder, sift and mix well. To each 100 g of the powder, add 40-50 g of refined honey and a quantity of water to make water-honeyed pills and dry; or add 110-130 g of refined honey to make big honeyed pills.

Description Brown water-honeyed pills or big honeyed pills; taste, sweet, slight sour and astringent.

Identification (1) Microscopical: Irregular branched masses colourless, dissolved in chloral hydrate TS, hyphae colourless or pale brown, 4-6 μm in diameter. Starch granules broad ovoid or mussel-shaped, 40-64 μm in diameter, hilum short-cleft. V-shaped or U-shaped, striations visible. Pericarp fibers pale yellow, arranged in oblique crisscross, walls thin, with pits. Nonglandular hairs of pericarp unicellular, straight or curve, lumen filled with yellowish-brown contents.

(2) Grind well 10 g of water-honeyed pills or cut 12 g of big honeyed pills into pieces and triturate well with 6 g of kieselguhr. Add 10 ml of ammonia TS and 30 ml of chloroform, heat under reflux for 1 hour, allow to cool, filter and extract the filtrate with two 20-ml quantities of 0. 1 mol/L hydrochloric acid by shaking. Combine the extracts and adjust to pH 10 with concentrated ammonia TS, and extract with two 20-ml quantities of chloroform by shaking. Combine the chloroform extracts, evaporate to dryness and dissolve the residue in 0. 5 ml of ethanol as the test solution. Prepare a solution with 2 g Bulbus Fritillariae Cirrhosae reference drug in 10 ml of ammonia TS in the same manner as the reference drug solution. Carry out the method for thin layer chromatography (Appendix Ⅵ B), using silica gel G as the coating substance and a mixture of hexane, ethyl acetate and diethylamine (12∶10∶1) as the mobile phase. Apply separately 10 μl of each of the two solutions to the plate. After developing and removing of the plate, dry in air, spray with a dilute potassium iodobismuthate TS and a sodium nitrite TS in order. The spots in the chromatogram obtained with the test solution correspond in position and colour to the spots in the chromatogram obtained with the reference drug solution.

(3) Grind well 2 g of water-honeyed pills or cut 3 g of big honeyed pills into pieces, ultrasonicate with 10 ml of methanol for 30 minutes, allow to cool, filter, evaporate the filtrate to dryness and dissolve the residue in 1 ml of

methanol as the test solution. Dissolve puerarin CRS in methanol to prepare a solution containing 1 mg per ml as the reference solution. Carry out the method for thin layer chromatography (Appendix Ⅵ B), using silica gel H as the coating substance and a mixture of chloroform, methanol and water (28∶10∶1) as the mobile phase. Apply separately 5 μl of the test solution and 2 μl of the reference solution to the plate. After developing and removing of the plate, dry in air. Expose to ammonia vapour for several minutes, examine under ultraviolet light at 365 nm. The fluorescent spot in the chromatogram obtained with the test solution corresponds in position and colour to the spot in the chromatogram obtained with the reference solution.

(4) Grind well 2 g of water-honeyed pills or cut 3 g of big honeyed pills into pieces and triturate well with 6 g of kieselguhr. Add 2 ml of hydrochloric acid and 20 ml of chloroform, heat under reflux for 1 hour cool, filter, evaporate the filtrate to dryness and dissolve the residue in 1 ml of ethanol as the test solution. prepare a solution with 0.5 g Radix Glycyrrhizae reference drug in 1 ml of hydrochloric acid and 15 ml of chloroform in the same manner as the reference drug solution. Dissolve glycyrrhetinic acid CRS in dehydrate ethanol to prepare a solution containing 1 mg per ml as the reference solution. Carry out the method for thin layer chromatography (Appendix Ⅵ B), using silica gel G as the coating substance and a mixture of petroleum ether (30-60℃), benzene, ethyl acetate and glacial acetic acid (10∶20∶7∶0.5) as the mobile phase. Apply separately 5 μl of the test solution, 3 μl of each of the reference solution and reference drug solution to the plate. After developing and removing of the plate, dry in air. Spray with 10% phosphomolybdic acid in ethanol and heat at 105℃ to the spots clear. The spots in the chromatogram obtained with the test solution correspond in position and colour to the spots in the chromatograms obtained with the reference drug solution and reference solution.

Other requirements Comply with the general requirements for pills (Appendix Ⅰ A).

Assay Carry out the method for high performance liquid chromatography (Appendix Ⅵ D).

Chromatographic system and system suitability Use octadecylsilane bonded silica gel as the stationary phase and a mixture of methanol and 0.5% acetic acid (20∶80) as the mobile phase. As detector a spectrophotometer set at 250 nm. The number of theoretical plates of the column is not less than 4000, calculated with the reference to the peak of puerarin.

Reference solution Dissolve a quality of puerarin CRS, accurately weighed, in methanol to produce a solution containing 30 μg per ml as the reference solution.

Test solution Grind the water-honeyed pills, weigh accurately 0.6 g, or chip the big honeyed pill, obtained under the test of weight variation, into pieces, weigh accurately 1 g, in a stopper conical flask, add accurately 50 ml of methanol, stopper tightly, and weigh. Ultrasonicate (power 250 W, frequency 33 kHz) for 30 minutes, cool, weigh again, replenish the loss of weight with methanol, shake well, filter and use the successive filtrate as the test solution.

Procedure Inject accurately 5-10 μl of each of the reference solution and the test solution into the column, respectively, and calculate the content.

It contains not less than 2.3 mg per gram of water-honeyed pill, 4.5 mg per big honeyed pill, of puerarin ($C_{21}H_{20}C_9$), referred to Radix Puerariae.

Action To clear *heat* to relieve the sore throat, and promote fluid production to moisten *dryness*.

Indications Discomfort in the throat, dry mouth and tongue, hoarseness and aphonia due to insufficiency of body fluids resulted from *lung-heat*.

Usage and dosage Taken with warm water or sucking in the mouth. 2 g of water-honeyed pill; 1 big honeyed pill, 2 times a day.

Precaution Avoid pungent and spicy foods.

Strength 10 g per 100 water-honeyed pills, 3 g per big honeyed pill

Storage Preserve in tightly closed containers.

Qinlian Pian
(芩连片)

Qinlian Tablets

Ingredients Radix Scutellariae 213 g; Fructus Forsythiae 213 g; Rhizoma Coptidis 85 g; Cortex Phellodendri 340 g; Radix Paeoniae Rubra 213 g; Radix et Rhizoma Glycyrrhizae 85 g.

Procedure Pulverize Radix Paeoniae Rubra and Rhizoma Coptidis to fine powder; Decoct other 4 ingredients with water for three times, combine the decoctions, filter, concentrate the filtrate to a quantity, mix thoroughly with the above powder, dry, pulverize to fine powder, mix well with a quantity of excipients, make granules and dry, make into 1000 tablets.

Description Yellow to brownish-yellow tablets, odour slightly aromatic; taste, bitter.

Identification (1) Microscopical: Fibre bundles bright yellow, walls relatively thickened, pits distinct; clusters of calcium oxalate 7-41 μm in diameter, occurring in parenchymatous cells, often in rows or several in one cell.

(2) Grind well 4 tablets, add 10 ml of ethanol, ultrasonicate for 15 minutes, filter, and use the filtrate as the test solution. Dissolve berberine hydrochloride CRS in ethanol to produce a solution containing 0.5 mg per ml as the reference solution. Carry out the method for thin layer chromatography (Appendix Ⅵ B), using silica gel G as the coating substance and a mixture of benzene, ethyl acetate, methanol, isopropanol, and concentrated ammonium TS (12∶6∶3∶3∶1) as the mobile phase. Apply separately to the plate 1 μl of each of the two solutions. Develop in a chamber pre-equilibrated with ammonia vapour. Remove the plate, and allow to dry in air. Examine under ultraviolet light at 365 nm, the fluorescent spot in the chromatogram obtained with the test solution corresponds in position and colour to the spot in the chromatogram obtained with the reference solution.

(3) Grind well 0.5 g of the tablets, add 20 ml of methanol, ultrasonicate for 20 minutes, and filter. Evaporate the filtrate to dryness, and dissolve the residue in 1 ml of methanol as the test solution. Dissolve a quantity of baicalin CRS in methanol to prepare a reference solution containing 1 mg per ml. Carry out the method for thin layer chromatography (Appendix Ⅵ B), using silica gel G as the coating substance an a mixture of ethyl acetate, butanone, formic acid, and water (5∶3∶1∶1) as the mobile phase. Apply separately 2 μl of each of the test solution and the reference solutions to the plate. After developing and removing the plate, dry in air. Spray with 1% ferric chloride in ethanol. The spot in the chromatogram obtained with the test solution corresponds in position and colour to the spot in chromatogram obtained with the reference solution.

(4) To 0.5 g of Radix Paeoniae Rubra reference drug, add 10 ml of methanol, ultrasonicate for 15 minutes, and filter. Evaporate the filtrate to dryness, dissolve the residue in 1 ml of methanol as the reference drug solution. Dissolve a quantity of paeoniflorin CRS in methanol to prepare a reference solution containing 1 mg per ml. Carry out the method for thin layer chromatography (Appendix Ⅵ B), using silica gel G as the coating substance and a mixture of chloroform, ethyl acetate, methanol, and formic acid (40∶5∶10∶0.2) as the mobile phase. Apply separately 5 μl of each of the test solution, obtained under the Identification (3), the reference solution and reference drug solution to the plate. After developing and removing the plate, dry in air. Spray with 5% vanillin in sulfuric acid, heat at 105℃ to the spots clear. The spots in the chromatogram obtained with the test solution correspond in position and colour to the spots in chromatogram obtained with the reference solution and reference drug solution.

Other requirements Comply with the general requirements for tablets (Appendix Ⅰ D).

Assay Carry out the method for high performance liquid chromatography (Appendix Ⅵ D).

Chromatographic system and system suitability Use octadecylsilane bonded silica gel as the stationary phase and a mixture of methanol, water, and glacial acetic acid (50∶50∶1) as the mobile phase. As detector a spectrophotometer set at 277 nm. The number of theoretical plates of the column is not less than 3500, calculated with the reference to the peak of baicalin.

Reference solution Weigh accurately a quantity of baicalin, dissolve in methanol to produce the reference solution containing 60 μg per ml.

Test solution Pulverize 20 tablets, obtained under the test of weight variation, to fine poweder, and weigh accurately 0.3 g, to a 50 ml volumetric flask. Add 40 ml of 70% ethanol, ultrasonicate (power 250 W, frequency 33 kHz) for 20 minutes, allow to cool, dilute to volume with 70% ethanol, and mix well. Allow to stand, separate the supernatant and filter, and use the successive filtrate as the test solution.

Procedure Inject accurately 10 μl of each of the reference solution and the test solution into the column, respectively, and calculate the content.
It contains not less than 5.5 mg of baicalin ($C_{21}H_{18}O_{11}$) per tablet, referred to Radix Scutellariae.

Action To clear *heat* and *toxicity*, and reduce swelling and pain.

Indications Headache, bloodshot eyes, or sores on the mouth and nose, or dysentery with abdominal pain, or swollen painful carbuncles or boils due to retained *heat* in the *zang-fu* organs.

Usage and dosage 4 tablets, 2-3 times a day.

Strength 0.55 g per tablet

Storage Preserve in tightly closed containers.

Qipi Wan
(启脾丸)

Qipi Pills

Ingredients Radix et Rhizoma Ginseng 100 g; Rhizoma Atractylodis Macrocephalae (stir-baked) 100 g; Poria 100 g; Radix et Rhizoma Glycyrrhizae 50 g; Pericarpium Citri Reticulatae 50 g; Rhizoma Dioscoreae 100 g; Semen Nelumbinis (stir-baked) 100 g; Fructus Crataegi (stir-baked) 50 g; Massa Medicata Fermentata (stir-baked) 80 g; Fructus Hordei Germinatus (stir-baked) 50 g; Rhizoma Alismatis 50 g.

Procedure Pulverize the above eleven ingredients to fine powder, sift and mix thoroughly. To each 100 g of the powder add 120-140 g of refined honey to make big honeyed pills.

Description Brown big honeyed pills; taste, sweet.

Identification (1) Microscopical: Irregular branched masses colourless, dissolved in chloral hydrate TS; hyphae colourless or pale brown, 4-6 μm in diameter. Clusters of calcium oxalate 20-68 μm in diameter, acutangular. Raphides of calcium oxalate occurring in mucilage cells, 80-240 μm long and needles 2-8 μm in diameter. Prisms of calcium oxalate abundant in parenchyma. Fibre bundles surrounded by parenchymatous cells containing prisms of calcium oxalate, forming crystal fibre. Stone cells of pericarp pale purplish-red, red or yellowish-brown, subrounded or polygonal, up to 125 μm in diameter.
(2) Grind well 6 g of the pills with 4 g of kieselguhr, heat under reflux in 20 ml of methanol for 1 hour, filter, use the filtrate as the test solution. Dissolve hesperidin CRS in methanol to produce a saturated solution as the reference solution. Carry out the method for thin layer chromatography (Appendix Ⅵ B), using silica gel G as the coating substance and the lower layer of a mixture of chloroform, methanol and water (32∶17∶5) as the mobile phase. Apply separately to the plate 2-5 μl of each of the two solutions. After developing and removing of the plate, dry in air. Spray with 1% solution of aluminium chloride in ethanol, and examine under ultraviolet light at 365 nm. The fluorescent spot in the chromatogram obtained with the test solution corresponds in position and colour to the spot in the chromatogram obtained with the reference solution.
(3) Grind well 9 g of the pills, cut into pieces, with 5 g of kieselguhr, add 40 ml of chloroform, ultrasonicate for 30 minutes and filter. Evaporate the filtrate to dryness. Dissolve the residue in 5 ml of ethyl acetate as the test solution. Dissolve ursolic acid CRS in ethanol to produce a solution containing 1 mg per ml as the reference solution. Carry out the method for thin layer chromatography (Appendix Ⅵ B), using silica gel G as the coating substance prepared with 0.5% boric acid and a mixture of cyclohexane and ethyl acetate (3∶1) as the mobile phase. Apply separately to the plate 10 μl of the test solution and 2 μl of the reference solution. After developing and removing of the plate, dry in air. Spray with a 10% solution of sulfuric acid in ethanol and heat at 105℃ to spots clear. The spot in the chromatogram obtained with the test solution corresponds in position and colour to the spot in the chromatogram obtained with the reference solution.
(4) To the drug residue extracted with chloroform under Identification test (3), add 50 ml of methanol, heat under reflux on a water bath for 1 hour, filter. Evaporate the filtrate to dryness. Dissolve the residue in 5 ml of methanol. Apply to a neutral aluminium oxide column (1-1.5 cm in internal diameter, 15 g, 100-200 mesh) and elute with 150 ml of 40% methanol. Collect the eluate, evaporate to dryness. Dissolve the residue in 30 ml of water, extract with two 25-ml quantities of *n*-butanol saturated with water. Combine the *n*-butanol extracts, wash with three 20-ml quantities of water saturated with *n*-butanol, evaporate the *n*-butanol extracts to dryness. Dissolve the residue in 0.5 ml of methanol as the test solution. Prepare a solution with 1 g of Radix et Rhizoma Glycyrrhizae reference drug as the reference drug solution in the same manner. Dissolve ginsenoside Re CRS, ginsenoside Rg_1 CRS in methanol to

produce a mixture containing 1 mg of each per ml as the reference solution. Carry out the method for thin layer chromatography (Appendix Ⅵ B), using silica gel G as the coating substance and the lower layer solution of a mixture of chloroform, ethyl acetate, methanol, and water (15∶40∶22∶10, stand under 10℃) as the mobile phase. Apply separately to the plate 1 μl of each of the test solution and the reference drug solution, 5 μl of the reference solution. After developing and removing of the plate, dry in air. Spray with 10% solution of sulfuric acid in ethanol and heat at 105℃ to spots clear. Examine under ultraviolet light at 365 nm. The fluorescent spots in the chromatogram obtained with the test solution correspond in position and colour to the spots in the chromatogram obtained with the reference drug solution and the reference solution.

Other requirements Comply with the general requirements for pills (Appendix Ⅰ A).

Assay Carry out the method for high performance liquid chromatography (Appendix Ⅵ D).

Chromatographic system and system suitability Use octadecylsilane bonded silica gel as the stationary phase and a mixture of methanol, 0.2 mol/L solution of ammonium acetate, and glacial acetic acid (62∶37∶1) as the mobile phase. As detector a spectrophotometer set at 250 nm. The number of theoretical plates of the column is not less than 2000, calculated with the reference to the peak of glycyrrhizinic acid.

Reference solution Weigh accurately a quantity of ammonium glycyrrhizinate CRS, dissolve in mobile phase to produce a reference solution containing 20 μg per ml (correspond to 19.59 μg of glycyrrhizinic acid per ml).

Test solution Cut the pills, obtained under the test of weight variation, into pieces, mix well, measure accurately 1 g of the pills to a stopper conical flask, add accurately 50 ml of the mobile phase, and weigh. Allow to stand overnight, ultrasonicate (power 250 W, frequency 20 kHz) for 30 minutes, allow to cool, weigh again, and replenish the loss of weight with mobile phase. Mix well and filter, use the successive filtrate as the test solution.

Procedure Inject accurately 10 μl of the reference solution and 20 μl of the test solution into the column, respectively, and calculate the content.

It contains not less than 1.3 mg of glycyrrhizinic acid ($C_{42}H_{62}O_{16}$) per pill, referred to Radix et Rhizoma Glycyrrhizea.

Action To invigorate the spleen and harmonize the stomach.

Indications Indigestion, abdominal bloating and loose stools due to hypofunctioning of the spleen and stomach.

Usage and dosage 1 pill, 2-3 times a day; appropriate reduction of the dosage for children under 3 years of age.

Strength 3 g per pill

Storage Preserve in tightly closed containers.

Qishiwei Zhenzhu Wan
(七十味珍珠丸)

Qishiwei Zhenzhu Pills

Qishiwei Zhenzhu Pills are prescription used by Tibetan Nationality, and prepared from Margarita, Lignum Santali Albi, Lignum Dalbergiae Odoriferae, Jiuyanshi, Stigma Croci, Calculus Bovis and Moschus, etc.

Description Black watered pills; odour, aromatic; taste, sweet, and bitter.

Identification (1) Microscopical: Irregular pieces colourless or pale green, translucent and lustrous, sometimes with fine wavy striations on the surface. Irregular red, green or blue transparent crystals available. Purplish-red fibres and crystal fibres in bundles or separated, walls thickened and all lignified.

(2) Pulverize 2 g of the pills, to fine powder, add 30 ml of methanol, ultrasonicate for 20 minutes and filter. Evaporate the filtrate to dryness, dissolve the residue in 20 ml of sulfuric acid (2→500), transfer to a separating funnel, and extract with two 15-ml quantities of ethyl acetate. Evaporate the ethyl acetate extracts to dryness, dissolve the residue in 1 ml of methanol as the test solution. Dissolve a quantity of cholic acid CRS in methanol to prepare a reference solution containing 1 mg per ml. Carry out the method for thin layer chromatography (Appendix Ⅵ B), using silica gel G as the coating substance and a mixture of chloroform, ethyl acetate, and formic acid (5∶5∶0.5) as the mobile phase. Apply separately 10 μl of the test solution and 5 μl of the reference solution to the plate. After developing and removing the plate, dry in air. Spray with 10% sulfuric acid in ethanol, heat at 105℃ to the spots clear. Examine under ultraviolet light at 365 nm. A blue fluorescent spot in the chromatography obtained with the test solution corresponds in position and colour to the spot in the chromatography obtained with the reference solution.

(3) Pulverize 1 g of the pills, to fine powder, add 20 ml of methanol, ultrasonicate for 20 minutes, and filter. Evaporate the filtrate to dryness, and dissolve the residue in 1 ml of methanol as the test solution. To 20 mg of Stigma Croci reference drug, add 4 ml of methanol, ultrasonicate for 20 minutes, allow to stand, and use the supernatant as the reference drug solution. Carry out the method for thin layer chromatography (Appendix Ⅵ B), using silica gel G mixed with sodium carboxymethylcellulose as the coating substance and a mixture of ethyl acetate, formic acid, and water (4∶1∶1) as the mobile phase. Apply separately 10 μl of the test solution and 5 μl of the reference drug solution to the plate. After developing and removing the plate, dry in air. The yellow spots in the chromatography obtained with the test solution correspond in position and colour to the spots in the chromatography obtained with the reference drug solution.

(4) Pulverize 2 g of the pills, to fine powder, add 30 ml of ether, ultrasonicate for 30 minutes, and filter. Evaporate the filtrate to dryness, and dissolve the residue in 1 ml of methanol as the test solution. To 0.3 g of Lignum Aquilariae Resinatum reference drug, add 5 ml of methanol, ultrasonicate for 10 minutes, allow to stand, and use the supernatant as the reference drug solution. Carry out the method for thin layer chromatography (Appendix Ⅵ B), using silica gel G mixed with sodium carboxymethylcellulose as the coating substance and a mixture of *n*-hexane, ethyl acetate, and formic acid (9∶1∶0.2) as the mobile phase. Apply separately 10 μl of the test solution and 5 μl of the reference drug solution to the plate. After developing and removing the plate, dry in air. Spray with 1% vanillin in 10% ethanol, heat to the spots clear. The violet-red spots in the chromatography obtained with the test solution correspond in position and colour to the spots in the chromatography obtained with the reference drug solution.

(5) To 0.1 g of Benzoinum reference drug, add 5 ml of methanol, ultrasonicate for 10 minutes, allow to stand, and use the supernatant as the reference drug solution. Carry out the method for thin layer chromatography (Appendix Ⅵ B), using silica gel G mixed with sodium carboxymethylcellulose

as the coating substance and a mixture of petroleum ether (60-90℃) and ethyl acetate (7∶3) as the mobile phase. Apply separately 10 μl of the test solution, obtained under the Identification (4), and 5 μl of the reference drug solution to the plate. After developing and removing the plate, dry in air. Spray with 10% sulfuric acid in ethanol. Examine under ultraviolet light at 365 nm. The yellow-green fluorescent spots in the chromatography obtained with the test solution correspond in position and colour to the spots in the chromatography obtained with the reference drug solution.

(6) Pulverize 1 g of the pills, to fine powder, add 4 ml of 80% acetone, ultrasonicate for 10 minutes. Allow to stand, use the supernatant as the test solution. Prepare a solution with 0.5 g of Flos Carthami reference drug in the same manner as the reference drug solution. Carry out the method for thin layer chromatography (Appendix Ⅵ B), using silica gel G mixed with sodium carboxymethylcellulose as the coating substance and a mixture of ethyl acetate, methanol, formic acid, and water (7∶2∶3∶0.4) as the mobile phase. Apply separately 15 μl of the test solution and 5 μl of the reference drug solution to the plate. After developing and removing the plate, dry in air. Examine under ultraviolet light at 365 nm. The yellow fluorescent spots in the chromatography obtained with the test solution correspond in position and colour to the spots in the chromatography obtained with the reference drug solution.

Other requirements Comply with the general requirements for pills (Appendix Ⅰ A), except disintegration test.

Action To induce sedation, promote blood circulation, regulate *qi and* blood, and promote the restoration of consciousness.

Indications Treating "HeiBai Mai" and "Longxue Butiao" diseases, apoplexy, paralysis, hemiplegia, epilepsy, cerebral hemorrhage, cerebral concussion, cardiac diseases, hypertension and mental disorders.

Usage and dosage 1 g in serious cases; normally 1 g for every 3-7 days, taken after dispersing in boiled water.

Precaution Contraindicated for taking stale and sour foods.

Strength (1) 1 g per 30 pills (2) 1 g per pill

Storage Preserve in tightly closed containers.

Qiwei Duqi Wan
(七味都气丸)

Qiwei Duqi Pills

Ingredients Fructus Schisandrae Chinensis (processed) 150 g; Fructus Corni (processed) 200 g; Poria 150 g; Cortex Moutan 150 g; Radix Rehmanniae Preparata 400 g; Rhizoma Dioscoreae 200 g; Rhizoma Alismatis 150 g.

Procedure Pulverize the above 7 ingredients to fine powder, sift and mix well. To each 100 g of the powder add 30 g of refined honey and a quantity of water to make pills and dry.

Description Blackish-brown water-honeyed pills; odour, slightly aromatic; taste, sweet and slightly sour.

Identification (1) Microscopical: Irregularly branched masses colourless, dissolved in chloral hydrate TS, hyphae colourless or pale brown, 4-6 μm in diameter. Parenchyma greyish-brown to blackish-brown, cells usually shrunken, each cell containing a nucleus-like mass. Parenchymatous cells subrounded, with elliptical pits, gathering into pitgroups. Anticlinal walls of endodermal cells sinuous, relatively thickened, lignified, with sparse and fine pit-canals.

(2) To 10 g of the pills, add 30 ml of ether, ultrasonicate for 15 minutes and filter. Evaporate the filtrate to dryness and dissolve the residue in 0.5 ml of ethyl acetate as the test solution. Prepare a solution with 0.5 g of Fructus Schisandrae Chinensis reference drug as the reference drug solution in the same manner. Dissolve deoxyschisandrin CRS and γ-schisandrin CRS in chloroform separately to produce two solutions containing 1 mg each per ml as the reference solutions. Carry out the method for thin layer chromatography (Appendix Ⅵ B), using silica gel GF_{254} as the coating substance and the upper layer of a mixture of petroleum ether (30-60℃), ethyl formate and formic acid (15∶5∶1) as the mobile phase. Apply separately to the plate 2 μl of each of the test solution and the reference drug solution and 5 μl of each of the two reference solutions. After developing and removing of the plate, dry in air, examine under ultraviolet light at 254 nm. The major spot in the chromatogram obtained with the test solution corresponds in position and colour to the spot in the chromatogram obtained with the reference drug solution, and the spot in the chromatogram obtained with the test solution corresponds in position and colour to the spot in the chromatogram obtained with the reference solutions.

(3) Dissolve ursolic acid CRS in ethanol to produce a solution containing 1 mg per ml as the reference solution. Carry out the method for thin layer chromatography (Appendix Ⅵ B), using silica gel G prepared with a 0.5% solution of boric acid as the coating substance and a mixture of cyclohexane and ethyl acetate (3∶1) as the mobile phase. Apply separately to the plate 2 μl of each of the reference solution and the test solution obtained under the test of Identification (2). After developing and removing of the plate, dry in air. Spray with 10% sulfuric acid in ethanol and heat at 100℃ to the spots clear. The spot under the chromatogram obtained with the test solution corresponds in position and colour to the spot in the chromatogram obtained with the reference solution.

(4) Dissolve paeonol CRS in acetone to produce a solution containing 2 mg per ml as the reference solution. Carry out the method for thin layer chromatography (Appendix Ⅵ B), using silica gel G as the coating substance and a mixture of cyclohexane, ethyl acetate and glacial acetic acid (9∶3∶0.25) as the mobile phase. Apply separately to the plate 10 μl of each of the reference solution and the test solution obtained under the test of Identification (2). After developing and removing of the plate, dry in air. Spray with 5% ferric chloride in ethanol acidified with hydrochloric acid, and heat to the spots clear. The spot in the chromatogram obtained with the test solution corresponds in position and colour to the spot in the chromatogram obtained with the reference solution.

Other requirements Comply with the general requirements for pills. (Appendix Ⅰ A).

Action To reinforce the kidney to improve inspiration and arrest seminal emission and enuresis.

Indications Wheezing, constriction in the chest, chronic coughing, shortness of breath, dry throat, seminal emission, night sweating and frequent urination due to failure of the kidney to improve inspiration.

Usage and dosage 9 g, 2 times a day.

Precaution Contraindicated for patients with cough or dyspnea caused by external contraction.

Strength About 3 g per 40 pills

Storage Preserve in tightly closed containers.

Qiwei Guangzao Wan
(七味广枣丸)

Qiwei Guangzao Pills

Qiwei Guangzao Pills is a prescription used by Mongolian Nationality.

Ingredients Fructus Choerospondiatis 450 g; Semen Myristicae 75 g; Flos Caryophylli 75 g; Radix Aucklandiae 75 g; Resina Liquidambaris 75 g; Lignum Aquilariae Resinatum 75 g; Pulvis Coris Bovis seu Bubali 75 g.

Procedure Pulverize the above seven ingredients to fine powder, sift and mix thoroughly. To each 100 g of the powder add 80-100 g of refined honey to make big honeyed pills, and coat with powder of Cinnabaris.

Description Red big honeyed pills with dark brown core; odour, aromatic; taste, sweet, bitter, pungent and slightly sour.

Identification (1) Microscopical: Endocarp fibres pale yellow, the upper and lower layers mostly crisscrossed, with slightly thickened walls and containing yellowish-brown matters. Pollen grains triangular, 16 μm in diameter. Walls of fibre-tracheids slightly thickened, with bordered pits, pit apertures V-shaped or crossed. Inulin bodies irregular, occasionally showing fine radial striations, dissolved on heating. Fibres of striated muscles colourless or pale yellow, with fine and dense, straight, or wavy striations.
(2) Grind well 12 g of the pills, cut into pieces, with 4 g of kieselguhr, macerate overnight in 30 ml of ethyl acetate, and filter. Evaporate the filtrate to dryness at a lower temperature. Dissolve the residue in 5 ml of methanol as the test solution. Prepare a solution with 1 g of Radix Aucklandiae reference drug and 5 ml of ethyl acetate as the reference drug solution in the same manner. Dissolve eugenol CRS in methanol to produce a solution containing 1 μl per ml as the reference solution. Carry out the method for thin layer chromatography (Appendix Ⅵ B), using silica gel G as the coating substance and a mixture of benzene and ethyl acetate (19:1) as the mobile phase. Apply separately to the plate 5 μl of each of the three solutions. After developing and removing of the plate, dry in air. Spray with a solution of 5% vanillin in sulfuric acid, and heat to the spots clear. The spots in the chromatogram obtained with the test solution correspond in position and colour to the spots in the chromatogram obtained with the reference drug solution and the reference solution.

Other requirements Comply with the general requirements for pills (Appendix Ⅰ A).

Action To nourish blood, replenish *qi*, and induce tranquilization.

Indications Distress and pain in the chest, palpitation, shortness of breath, restlessness, insomnia and forgetfulness.

Usage and dosage 1 pill, 1-2 times a day.

Strength 6 g per pill

Storage Preserve in tightly closed containers.

Qiwei Ketengzi Wan
(七味榼藤子丸)

Qiwei Ketengzi Pills

Qiwei Ketengzi Pills are prescription used by Dai Nationality.

Ingredients Semen Entadae (stir baked) 220 g; Caulis et Folium Crotonis Caudati 220 g; Resina Ferulae 3 g; Fructus Piperis 13 g; Fructus Viticis 66 g; Folium Viticis 154 g; Semen Nigellae Sativae 220 g; Herba Ecliptae 220 g.

Procedure Pulverize the above ingredients, except Herba Ecliptae, to fine powder and mix thoroughly. Decoct Herba Ecliptae with water two times, 1 hour for each, filter, combine the filtrates, concentrate to thin extract with relative density of 1.1-1.2 (determine at 20℃ by adding 1 times quantity of water to the concentrated extract), use as juice of Herba Ecliptae. Mix well the fine powder, juice of Herba Ecliptae, and a quantity of refined honey. Make to 1000 g of pills, dry at 60℃.

Description Dark brown to blackish-brown watered pills; odour, alliaceous; taste, pungent and slightly bitter.

Identification (1) Microscopical: Starch granules sub-rounded, ovoid or helmeted, 5-10 μm in diameter, hilum pointed, V-shaped, cleft, I-shaped or crossed, compound granules composed of 2-3 components. Stellate trichomes yellow, composed of 5-12 sharpened conical cells, sometimes one cell elongated particularly. Clusters of calcium oxalate obtuse angled, 5-50 μm in diameter. Non-glandular hair 2-5-celled, 45-175 μm long, with warty walls. Glandular hairs 27-65 μm long, with a 1-2-celled stalk and a 1-2-celled head, secreting yellowish substances. Cells of fragments of calyx with sinuous walls. Cells of testa polygonal, with beaded walls. Stone cells pale yellow, grouped or scattered, subrounded or polygonal, 20-35 μm in diameter, with thickened, lignified walls and distinct pit-canals, each with a large lumen.
(2) Pulverize 5 g of the pills to fine powder, triturate well with 2.5 g of kieselguhr, add 40 ml of ethanol, and ultrasonicate for 30 minutes. Allow to cool, filter, evaporate the filtrate to dryness, and dissolve the residue in 3 ml of methanol as the test solution. To 1 g of the Semen Nigellae reference drug, add 10 ml of ethanol, ultrasonicate for 30 minutes, and prepare a solution in the same manner as the reference drug solution. Carry out the method for thin layer chromatography (Appendix Ⅵ B), using silica gel G as the coating substance and a mixture of benzene, methanol, and formic acid (18:3:0.2) as the mobile phase. Apply separately 5 μl of each of the test solution and the reference drug solution to the plate. After developing and removing the plate, dry in air. Spray with 5% vanillin in sulfuric acid, and heat at 105℃ to the spots clear. The spots in the chromatogram obtained with the test solution correspond in position and colour to the spots in chromatogram obtained with the reference solution and the reference drug solution.

Other requirements Comply with the general requirements for pills (Appendix Ⅰ A).

Assay Carry out the method for high performance liquid chromatography (Appendix Ⅵ D).

Chromatographic system and system suitability Use octadecylsilane bonded silica gel as the stationary phase and a mixture of methanol and water (50 : 50) as the mobile phase. As detector a spectrophotometer set at 258 nm. The

number of theoretical plates of the column is not less than 3000, calculated with the reference to the peak of vitexicarpin.

Reference solution Weigh accurately a quantity of vitexicarpin CRS, and dissolve in methanol to produce a reference solution containing 20 μg per ml.

Test solution Pulverize the pills to fine powder, weigh accurately 5 g of the powder to a stopper conical flask. Add accurately 25 ml of the dehydrated ethanol, weigh, and ultrasonicate (power, 300 W; frequency, 50 kHz) for 30 minutes. Allow to cool, weigh again, replenish the loss of weight with dehydrated ethanol, and filter. Measure accurately 10 ml of the filtrate, add 2.5 ml of water and mix well, and wash with petroleum ether (60-90℃) for 3 times, 15 ml for the first and second times, and 10 ml for the third time. Wash the petroleum ether extracts with 10 ml of ethanol, combine the solution of ethanol, and evaporate to dryness. Dissolve the residue in methanol, transfer to a 10 ml volumetric flask, dilute to volume with methanol, and mix well as the test solution.

Procedure Inject accurately 10 μl of each of the reference solution and 10 μl of the test solution into the column, respectively, and calculate the content.
It contains not less than 66 μg of vitexicarpin ($C_{19}H_{18}O_8$) per gram, referred to Fructus Viticis and Folium Viticis.

Action To expel *summer-heat*, regulate the function of the spleen and stomach, and relieve spasm and pain.

Indications Vomiting, diarrhea, feeling of stuffiness in the chest, costal pain, headache and fever.

Usage and dosage 3-6 g, 3 times a day; for external application after grinding and mixing with sesame oil.

Strength 3 g per bag

Storage Preserve in tightly closed containers, protected from moisture.

Qiwei Putao San
(七味葡萄散)

Qiwei Putao Powder

Qiwei Putao Powder is a prescription used by Mongolian Nationality.

Ingredients Fructus Vitis Viniferae 180 g; Gypsum Fibrosum 90 g; Flos Carthami 90 g; Radix Glycyrrhizae 90 g; Rhizoma Cyperi 60 g; Cortex Cinnamomi 60 g; Fructus Punicae Granati 60 g.

Procedure Pulverize the above ingredients, except Fructus Vitis Viniferae, to coarse powder. Triturate Fructus Vitis Viniferae with the above coarse powder to powder, heat to dryness, pulverize to fine powder, sift and mix well.

Description A yellowish-brown powder; odour, aromatic; taste, sweet and slightly astringent.

Identification (1) Microscopical: Fragments of corolla yellow, with reddish-brown or yellowish-brown tubular secretory cells. Secretory cells subrounded, containing pale yellowish-brown to reddish-brown secretion with adjacent cells arranged in radiation. Stone cells subsquare or subrounded, 32-88 μm in diameter with thin walls at one side. Stone cells colourless, elliptical or subrounded, with thickened walls and fine and dense pit-canals. Irregular plate crystals colourless, with straight striations.
(2) To 5 g add 1 ml of hydrochloric acid and 15 ml of chloroform, heat under reflux for 1 hour, cool, and filter. Evaporate the filtrate to dryness, and dissolve the residue in 2 ml of ethanol as the test solution. Dissolve glycyrrhetinic acid CRS in dehydrated ethanol to prepare a solution containing 2 mg per ml as the reference solution. Carry out the method for thin layer chromatography (Appendix Ⅵ B), using silica gel G mixed with sodium carboxymethylcellulose as the coating substance and a mixture of benzene, petroleum ether (30-60℃), ethyl acetate and glacial acetic acid (10∶5∶4∶0.6) as the mobile phase. Apply separately 1-2 μl of the test solution and 2 μl of the reference solution to the plate. After developing and removing of the plate, dry in air. Spray with a 10% solution of phosphomolybdic acid in ethanol and heat to the spots distinct. The spot in the chromatogram obtained with the test solution corresponds in position and colour to the spot in the chromatogram obtained with the reference solution.
(3) To 5 g add 20 ml of ether, extract by shaking for 15 minutes, and filter. Evaporate the filtrate to dryness, and dissolve the residue in 1 ml of dehydrated ethanol as the test solution. Dissolve cinnamaldehyde CRS in dehydrated ethanol to produce a solution containing 1 μl per ml as the reference solution. Carry out the method for thin layer chromatography (Appendix Ⅵ B), using silica gel G mixed with sodium carboxymethylcellulose as the coating substance and a mixture of petroleum ether (60-90℃) and ethyl acetate (17∶3) as the mobile phase. Apply separately 10 μl of the test solution and 5 μl of the reference solution to the plate. After developing and removing of the plate, dry in air. Spray with alcoholic dinitrophenylhydrazine TS. The spot in the chromatogram obtained with the test solution corresponds in position and colour to the spot in the chromatogram obtained with the reference solution.
(4) To 3 g add 10 ml of 80% acetone, stopper well, shake for 15 minutes, allow to stand, and use the supernatant as the test solution. Prepare a solution with 0.5 g of Flos Carthami reference drug in the same manner as the reference drug solution. Carry out the method for thin layer chromatography (Appendix Ⅵ B), using silica gel H mixed with sodium carboxymethycellulose as the coating substance and a mixture of ethyl acetate, methanol, formic acid and water (7∶0.4∶2∶3) as the mobile phase. Apply separately 5 μl of each of the two solutions to the plate. After developing and removing of the plate, and dry in air. The spots in the chromatogram obtained with the test solution correspond in position and colour to the spots in the chromatogram obtained with the reference drug solution.
(5) To 10 g add 50 ml of ether, macerate for 30 minutes with occasional shaking, filter, and evaporate the filtrate to dryness. Dissolve the residue in 0.5 ml of ethanol as the test solution. Prepare a solution with 2 g of Rhizoma Cyperi reference drug in the same manner as the reference drug solution. Dissolve α-cyperone CRS in ethanol to produce a solution containing 1 mg per ml as the reference solution. Carry out the method for thin layer chromatography (Appendix Ⅵ B), using silica gel G mixed with sodium carboxymethycellulose as the coating substance and a mixture of petroleum ether (60-90℃) and ethyl acetate (6∶4) as the mobile phase. Apply separately 10 μl of each of the three solutions to the plate. After developing and removing of the plate, dry in air. Spray with 1% vanillin in sulfuric acid, heat at 105℃ for 10 minutes and examine under ultraviolet light at 365 nm. The fluorescent spots in the chromatogram obtained with the test solution correspond in position and colour to the spots in the chromatograms obtained with the reference drug solution and the reference solution.

Other requirements Comply with the general requirements

for powder (Appendix Ⅰ B).

Assay Carry out the method for high performance liquid chromatography (Appendix Ⅵ D).

Chromatographic system and system suitability Use octadecylsilane bonded silica gel as the stationary phase and a mixture of methanol, 0.2 mol/L ammonium acetate and glacial acetic acid (67∶33∶1) as the mobile phase. As detector a spectrophotometer set at 250 nm. The number of theoretical plates of the column is not less than 2500, calculated with the reference to the peak of glycyrrhizinic acid.

Reference solution Dissolve a quantity of ammonium glycyrrhizinate, accurately weighed, in mobile phase to prepare a solution containing 0.2 mg per ml, equivalent to 0.1959 mg per ml of glycyrrhizinic acid, as the reference solution.

Test solution Weigh accurately 1 g in a stopper conical flask, add 25 ml of the mobile phase, and weigh. Ultrasonicate for 30 minute, cool, weigh again, replenish the loss of weight with mobile phase, shake well and filter. Measure accurately 10 ml of the successive filtrate, evaporate to dryness, dissolve the residue in 20 ml of water, and extract with four 20-ml quantities of *n*-butanol saturated with water. Combine the *n*-butanol extracts, recover the solvent to dryness, dissolve the residue in mobile phase, transfer to a 10 ml volumetric flask, dilute to volume, and shake well.

Procedure Inject accurately 10 μl of each of the reference solution and the test solution into the column, respectively, and calculate the content.

It contains not less than 2.3 mg of glycyrrhizinic acid ($C_{42}H_{62}O_{16}$) per gram, referred to Radix Glycyrrhizae.

Action To remove *heat* from the lung, and relieve cough and dyspnea.

Indications Cough in phthisis, dyspnea in the aged, depressed sensation and stuffiness in the chest.

Usage and dosage 3 g, 1-2 times a day.

Strength 3 g per bag

Storage Preserve in tightly closed containers, protected from moisture.

Qiwei Tiexie Wan
(七味铁屑丸)

Qiwei Tiexie Pills

Qiwei Tiexie Pills are prescription used by Tibetan Nationality.

Ingredients Pulvis Ferri (processed with Fructus Chebulae) 250 g; Gypsum Rubrum (processed with milk) 300 g; Radix Inulae 150 g; Radix Aucklandiae 100 g; Herba Dracocephali Tangutici 150 g; Flos Carthami 150 g; Extractum Faeces Trogopterori 80 g.

Procedure Pulverize the above seven ingredients, except Extractum Faeces Trogopterori, to fine powder, sift and mix thoroughly. Make pills with Extractum Faeces Trogopterori and a quantity of water, then polish with a quantity of paste of Pulvis Ferri (to 1 portion of Pulvis Ferri processed with Fructus Chebulae add 4 portions of water and mix well) and dry.

Description Black watered pills; odour, aromatic; taste, bitter.

Identification (1) Microscopical: Irregular pieces dark black, lustrous on edge. Crystals in irregular pieces, glassy lustrous, with straight striations on edge. Wood fibres in bundles, long-fusiform, with oblique pits. Wood fibres in bundles, long-fusiform, 16-24 μm in diameter, walls thickened, with cleft, crossed or V-shaped pits. Epidermal cells of leaves subpolygonal in surface view, periclinal walls with cuticle striations and the scars of hairs, anticlinal walls beaded. Pollen grains rounded or ellipsoidal, up to 60 μm in diameter, extine with spinules, and 3 germinal apertures. Irregular masses brownish-black, dissolved immediately on adding of 50% sulfuric acid solution.

(2) To 0.5 g, in powder, add 10 ml of water, warm slightly and filter. Acidify 2 ml of the filtrate slightly with dilute hydrochloric acid, add 5 drops of potassium ferrocyanide TS, allow to stand; a bluish-green colour is produced, which disappeare on adding 3 drops of sodium hydroxide TS.

(3) Macerate 4 g, in powder, with 10 ml of water for 10 minutes, add 10 ml of a mixture of *n*-hexane and ethyl acetate (1∶1), macerate for 3 hours, centrifuge, concentrate the supernatant to about 1 ml as the test solution. Prepare a solution with 0.1 g of Radix Aucklandiae reference drug as the reference drug solution in the same manner. Carry out the method for thin layer chromatography (Appendix Ⅵ B), using silica gel G containing sodium carbonmethylcellulose as the coating substance and a mixture of petroleum ether (60-90℃) and ethyl acetate (4∶1) as the mobile phase. Apply separately 4 μl of each of the two solutions to the plate. After developing and removing of the plate, dry in air. Spray with 5% vanillin in sulfuric acid, heat to spots clear. The blue main spots in the chromatogram obtained with the test solution correspond in position and colour to the spots in the chromatogram obtained with the reference drug solution.

(4) To 4 g, in powder, add 20 ml of 80% solution of acetone, and ultrasonicate for 30 minutes. Filter, concentrate the filtrate to 2 ml as the test solution. Prepare a solution with 0.1 g of Flos Carthami reference drug in the same manner as the reference drug solution. Carry out the method for thin layer chromatography (Appendix Ⅵ B), using silica gel G mixed with sodium carboxymethylcellulose as the coating substance and a mixture of ethyl acetate, formic acid, water, and methanol (7∶2∶3∶0.4) as the mobile phase. Apply separately 10 μl of each of the test solution and the reference drug solution to the plate. After developing and removing the plate, dry in air. The spots in the chromatography obtained with the test solution correspond in position and colour to the spots in the chromatography obtained with the reference drug solution.

(5) To 1 g of Herba Dracoephali Tangutici reference drug, prepare a solution in the same manner of the method of test solution under the Identification (3) as the reference drug solution. Carry out the method for thin layer chromatography (Appendix Ⅵ B), using silica gel G mixed with sodium carboxymethylcellulose as the coating substance and a mixture of chloroform and methanol (9.5∶0.5) as the mobile phase. Apply separately 10 μl of each of the test solution under Identification (3) and the reference drug solution to the plate. After developing and removing the plate, and dry in air. Spray with 10% sulfuric acid in ethanol, heat at 105℃ to the spots clear. The spots in the chromatogram obtained with the test solution correspond in position and colour to the spots in chromatogram obtained with the reference drug solution.

Other requirements Comply with the general requirements for pills (Appendix Ⅰ A).

Action To promote the flow of *qi* and blood, to subdue the hyperactivity of the liver, and to relieve pain.

Indications Pain in the hepatic region, enlargement of the liver.

Usage and dosage 1 pill, twice a day.

Strength 1 g per pill

Storage Preserve in tightly closed containers, protected from moisture.

Qiye Shen'an Pian
(七叶神安片)

Qiye Shen'an Tablets

Qiye Shen'an Tablets are prepared from total sapogium of Folium Notoginseng.

Procedure Make granules with 50 g or 100 g of total sapogium of Folium Notoginseng and a quantity of excipient, make into 1000 tablets and coat with sugar or film.

Description Sugar of film coated tablets with pale yellow to brownish-black core; taste, bitter, slightly sweet.

Identification Dissolve ginsenoside Rb_1 and ginsenoside Rb_3 CRS in methanol to produce solutions containing 0.5 mg of each per ml as the reference solutions. Carry out the method under Assay, inject 10 μl of each of the two reference solutions and the test solution under Assay into the column, respectively, the retention time of the peaks obtained with the test solution and the ginsenoside Rb_1 and Rb_3 reference solution is concordant with each other.

Other requirements Comply to the general requirements for tablets (Appendix Ⅰ D).

Assay Carry out the method for high performance liquid chromatography (Appendix Ⅵ D).

Chromatographic system and system suitability Use octadecylsilane bonded silica gel as the stationary phase, acetonitril as the mobile phase A, 0.2% phosphoric acid as the mobile phase B, elute in gradient as the following:

Time (minute)	Mobile phase A (per cent V/V)	Mobile phase B (per cent V/V)
0-19	30→35	70→65
19-21	35→50	65→50
21-26	50	50

As detector a spectrophotometer set at 203 nm. The number of theoretical plates for the column is not less than 6000, calculated with the reference to the peak of ginsenoside Rb_3.

Reference solution Weigh accurately a quantity of ginsenoside Rb_3 CRS, dissolve in methanol to produce a reference solution containing 0.5 mg per ml.

Test solution To 10 tablets, with coating removed, weigh accurately. Pulverize to fine powder, weigh accurately a quantity of the powder (correspond to about 100 mg of total sapogium of Folium Notoginseng) to a 100 ml stopper conical flask, add accurately 20 ml of ethanol, stopper and weigh. Ultrasonicate (power, 300 W; frequency, 50 kHz) for 15 minutes, allow to cool, and weigh again. Replenish the loss of weight with ethanol, mix well and filter. Collect the successive filtrate, filter again with microporous film (0.45 μm), use the successive filtrate as the test solution.

Procedure Inject accurately 10 μl of each of the reference solution and the test solution into the column, respectively, and calculate the content.

It contains not less than 5.0 mg of ginsenoside Rb_3 ($C_{53}H_{90}O_{22}$) per tablet for Strength (1), and 10.0 mg for Strength (2), referred to total sapogium of Folium Notoginseng.

Action To nourish *qi* and anchor the *mind*, and promote blood circulation to kill pain.

Indications Palpitation, insomnia, pain and constriction in the chest due to stagnation of *heart-blood* from a deficiency of *heart-qi*.

Usage and dosage 50-100 mg, 3 times a day; taken after meals, or follow doctor's advice.

Strength (1) 50 mg
(2) 100 mg of total sapogium of Folium Notoginseng per tablet

Storage Preserve in tightly closed containers.

Attached:

Sanqiye zongzaogan
(三七叶总皂苷)

Total sapogium of Folium Notoginseng

Total sapogium of Folium Notoginseng is prepared from Folium Notoginseng.

Procedure Decoct Folium Notoginseng with water twice, 3 hours for each, combine the decoctions, filter, and concentrate the filtrate to a thin extract with a relative density of 1.2 (60℃). Add ethanol to a content of 60%, allow to stand to precipitate, filter the supernatant, decolourize, recover ethanol, concentrate to a thin extract with a relative density of 1.2 (60℃) and dry.

Description Pale yellow to brownish-yellow; taste, bitter and than slightly sweet, hygroscipic.

Identification (1) Dissolve the sample in 1 ml of acetic anhydride, add 1-2 drops sulfuric acid along the wall of test tube. A violet-red colour is produced. Mix well and allow to stand, it become violet.
(2) Comply with the test for Identification of Qiye Shen'an Tablets.

Loss on drying When dried to constant weight at 80℃, loses not more than 5.0 per cent of its weight (Appendix Ⅸ G).

Residue on ignition Not more than 0.4 per cent (Appendix Ⅺ J).

Assay Weigh accurately 50 mg to a 10 ml volumetric flask, dissolve in ethanol and dilute to volume. Mix well and filter, use the successive filtrate as the test solution. Carry out the method as described under the Assay of Qiye Shen'an Tablets.
It contains not less than 10 per cent of ginsenoside Rb_3 ($C_{53}H_{90}O_{22}$), referred to total sapogenin of Folium Notoginseng.

Storage Preserve in tightly closed containers, protected from light.

Preparation Qiye Shen'an Tablets

Qizhen Wan
(七珍丸)

Qizhen Pills

Ingredients Bombyx Batryticatus (stir-baked) 160 g; Scorpio 160 g; Moschus 16 g; Cinnabaris 80 g; Realgar 80 g; Arisaema cum Bile 80 g; Concretio Silicea Bambusae 80 g; Semen Crotonis Pulveratum 32 g; Massa Hanshi

Fermentata 160 g.

Procedure Levigate Realgar and Cinnabaris to very fine powder respectively. Pulverize Bombyx Batryticatus, Scorpio, Arisaema cum Bile, Concretio Silicea Bambusae and Mass Hanshi Fermentata to fine powder. Triturate Moschus with the above powders (reserve a quantity of Cinnabaris for coating), sift and mix well. Make pills with water, dry at a lower temperature and coat with the reserved powder of Cinnabaris.

Description Vermilion watered pills; odour, strongly aromatic; taste, pungent and slightly bitter.

Identification Microscopical: Irregular pieces colourless and transparent, with straight and angulate edges, dissolved in chloral hydrate TS. Clusters of calcium oxalate 8-24 μm in diameter, occurring in subrounded parenchymatous cells. Fragments of body wall colourless, covered with minute hyphae. Fragments of body wall pale yellow to yellow, with reticulate striations and rounded alveoli, sometimes showing brown setae. Irregular fragments golden-yellow or orange-yellow, lustrous. Irregular fine granules dark brownish-red, lustrous, with dark black edge.

Other requirements Comply with the general requirements for pills (Appendix Ⅰ A).

Action To relieve convulsion and eliminate *phlegm*, and promote digestion and bowels movement.

Indications Child acute convulsion, fever, lethargy, harsh breathing, restlessness, excessive *phlegm*, no desire for food or milk and constipation.

Usage and dosage 3 pills for children of 3-4 months, 4-5 pills for children of 5-6 months, 6-7 pills for children of 1 year, 1-2 times a day; appropriate increasement of the dosage for children over 1 year and the sturdy children; or follow doctor's advice.

Strength About 3 g per 200 pills

Storage Preserve in tightly closed containers.

Qizhi Weitong Keli
(气滞胃痛颗粒)

Qizhi Weitong Granules

Ingredients Radix Bupleuri; Rhizoma Corydalis (baking); Fructus Aurantii; Rhizoma Cyperi; Radix Paeoniae Alba; Radix et Rhizoma Glycyrrhizai Preparata cum Melle.

Procedure Distill volatile oil of Fructus Aurantii and Rhizoma Cyperi, stand the volatile oil and the aqueous extract solution for further use. Discard the drug residue. Decoct the other 4 ingredients with water twice, 2 hours for the fist time and 1 hour for the second time. Combine the decoctions and the aquaefer extract solution of Fructus Aurantii and Rhizoma Cyperi, filter and concentrate the filtrate to a relative density of 1.18-1.23 (50℃), add a quantity of excipient, make granules, spray the volatile oil, and mix thoroughly.

Description Pale brown to brownish-yellow granules; odour, characteristically aromatic; taste, sweet, slightly bitter and pungent.

Identification (1) To 15 g of the granules, add 40 ml of ethanol, macerate for 1 hour, shake constantly, and filter. Evaporate the filtrate to dryness. Dissolve the residue in 5 ml of water, and extract with 30 ml of *n*-butanol saturated with water. Wash the *n*-butanol extract with three 20-ml quantities of water. Evaporate the *n*-butanol extracts to dryness, and dissolve the residue in 1 ml of ethanol as the test solution. Dissolve paeoniflorin CRS in ethanol to produce a solution containing 2 mg per ml as the reference solution. Carry out the method for thin layer chromatography (Appendix Ⅵ B), using silica gel G as the coating substance, and a mixture of chloroform and methanol (4∶1) as the mobile phase. Apply separately to the plate 4 μl of each of the above two solutions. After developing and removing of the plate, and dry in air. Spray with a 5% solution of vanillin in sulfuric acid, and heat to spots clear. The bluish-purple spot in the chromatogram obtained with the test solution corresponds in position and colour to the spot in the chromatogram obtained with the reference solution.

(2) To 5 g of the granules, add 50 ml of methanol, ultrasonicate for 30 minutes, filter, and evaporate the filtrate to dryness. Dissolve the residue in 10 ml of 2% hydrochloric acid, extract with two 15-ml quantities of ether, discard the ether layer, add ammonia TS to water layer, adjust to pH 9. Extract with two 15-ml quantities of ether again, combine the ether extracts. Evaporate the ether extracts to dryness, and dissolve the residue in 1 ml of chloroform as the test solution. Dissolve tetrahydropalmatine CRS in chloroform to produce a solution containing 1 mg per ml as the reference solution. Carry out the method for thin layer chromatography (Appendix Ⅵ B), using silica gel G prepared with 1% solution of sodium hydroxide as the coating substance and a mixture of *n*-hexane, chloroform, and methanol (10∶6∶1) as the mobile phase. Apply separately 10 μl of the test solution and 5 μl of the reference solution to the plate. After developing and removing of the plate, dry in air, expose to iodine vapour to spots clear. The spot in the chromatogram obtained with the test solution corresponds in position and colour to the spot in the chromatogram obtained with the reference solution.

Other requirements Comply with the general requirements for medicinal granules (Appendix Ⅰ C).

Assay Carry out the method for high performance liquid chromatography (Appendix Ⅵ D).

Chromatographic system and system suitability Use octadecylsilane bonded silica gel as the stationary phase, and a mixture of methanol and 0.02 mol/L solution of potassium dihydrogen phosphate (28∶72) as the mobile phase. As detector a spectrophotometer set at 230 nm. The number of theoretical plates of the column is not less than 4000, calculated with the reference to the peak of paeoniflorin.

Reference solution Weigh accurately a quantity of paeoniflorin CRS, dissolve in ethanol and mix well, to produce a solution containing 80 μg per ml.

Test solution Weigh accurately 2 g of the granules, obtained under the test of weight variation, pulverized to fine powder, in a stopper conical flask. Add accurately 50 ml of water, closely stopper and weigh. Ultrasonicate for 60 minutes (power 250 W, frequency 50 kHz), cool, weigh again, replenish the loss of weight with water, shake well and filter. Use the successive filtrate as the test solution.

Procedure Inject accurately 10 μl of each of the reference solution and the test solution into the column respectively and calculate the content.

It contains not less than 7.5 mg of paeoniflorin ($C_{23}H_{28}O_{11}$) per bag, referred to Radix Paeoniae Alba.

Action To soothe the liver to regulate the flow of *liver-qi*, and harmonize the stomach and kill pain.

Indications Stuffiness in the chest and gastralgia due to stagnation of *liver-qi*.

Usage and dosage 5 g, 3 times a day, taken with boiled water.

Precaution Be cautions about pregnant women.

Strength 5 g per bag

Storage Preserve in tightly closed containers.

Qufeng Shujin Wan (祛风舒筋丸)

Qufeng Shujin Pills

Ingredients Radix Saposhnikoviae 50 g; Ramulus Cinnamomi 50 g; Herba Ephedrae 50 g; Radix Clematidis 50 g; Radix Aconiti Preparata 50 g; Radix Aconiti Kusnezoffii Preparata 50 g; Rhizoma Atractylodis (stir-baked) 50 g; Poria 50 g; Fructus Chaenomelis 50 g; Radix Gentianae Macrophyllae 50 g; Rhizoma Drynariae (stir-baked) 50 g; Radix Achyranthis Bidentatae 50 g; Radix et Rhizoma Glycyrrhizae 50 g; Caulis Piperis Kadsurae 50 g; Caulis Sinomenii 50 g; Rhizoma Dioscoreae Nipponicae 50 g; Herba Erodii seu Geranii 50 g; Radix et Caulis Solani Melongenae 50 g.

Procedure Pulverize the above eighteen ingredients to fine powder, sift and mix thoroughly. To each 100 g of the powder add 160-180 g of refined honey to make big honeyed pills.

Description Blackish-brown big honeyed pills; odour, slight; taste, sweet and bitter.

Identification (1) Microscopical: Irregular branched masses colourless, dissolved in chloral hydrate TS; hyphae colourless or pale brown, 4-6 μm in diameter. Stomata characteristic, guard cells dumbbell-like in lateral view. Fibre bundles surrounded by parenchymatous cells containing prisms of calcium oxalate, forming crystal fibres. needle crystals of calcium oxalate fine, 10-32 μm long, irregularly filled in parenchymatous cells. Vittae containing golden-yellow secretion, about 30 μm in diameter. Non-glandular hairs unicellular, mostly broken, 15-20 μm in diameter, with warty walls. Stone cells rectangular or subsquare, with slightly thickened walls. Stone cells rounded, rectangular or subpolygonal, walls thickened, lumina containing orange or brown contents.

(2) Grind well 28 g of the pills, cut into pieces, with 5 g of kieselguhr, add 30 ml of ethyl acetate, heat under reflux on a water bath for 30 minutes. Filter and concentrate the filtrate to about 1 ml on a water bath of lower temperature as the test solution. Dissolve cinnamaldehyde CRS in ethanol to produce a solution containing 1 μl per ml as the reference solution. Carry out the method for thin layer chromatography (Appendix Ⅵ B), using silica gel G as the coating substance and a mixture of petroleum ether (60-90℃) and ethyl acetate (17∶3) as the mobile phase. Apply separately to the plate 5 μl of the test solution and 2 μl of the reference solution. After developing and removing of the plate, dry in air, spray with dinitrophenylhydrazine TS, the orange colour spot in the chromatogram obtained with the test solution corresponds in position and colour to the spot in the chromatogram obtained with the reference solution.

(3) Grind well 28 g of the pills, cut to pieces, with 5 g of kieselguhr, add 2 ml of concentrated ammonium TS and 50 ml of chloroform, heat under reflux for 1 hour. Filter and evaporate the filtrate to dryness. To the residue add 1 ml of methanol as the test solution. Dissolve ephedrine hydrochloride CRS in methanol to produce a solution containing 1 mg per ml as the reference solution. Carry out the method for thin layer chromatography (Appendix Ⅵ B), using silica gel G as the coating substance and a mixture of chloroform, methanol and concentrated ammonia TS (40∶7∶1) as the mobile phase. Apply separately to the plate 5 μl of the test solution and 2 μl of the reference solution. After developing and removing of the plate, dry in air, spray with triketohydrindene TS, heat at 105℃ for 10 minutes, the purplish-red colour spot in the chromatogram obtained with the test solution corresponds in position and colour to the spot in the chromatogram obtained with the reference solution.

(4) Heat under reflux 0.5 g of Radix Saposhnikoviae reference drug in 20 ml of chloroform and 1 ml of concentrated ammonium TS for 1 hour. Filter and evaporate the filtrate to dryness, dissolve the residue in 1 ml of methanol as the reference drug solution. Carry out the method for thin layer chromatography (Appendix Ⅵ B), using silica gel G as the coating substance and a mixture of petroleum ether (60-90℃) and ethyl acetate (7∶3) as the mobile phase. Apply separately to the plate 10 μl of the test solution obtained under Identification test (2) and 5 μl of the reference drug solution. After developing and removing of the plate, dry in air, examine under ultraviolet light at 365 nm, the bluish-purple colour spots in the chromatogram obtained with the test solution correspond in position and colour to the spots in the chromatogram obtained with the reference drug solution.

Other requirements Comply with the general requirements for pills (Appendix Ⅰ A).

Action To expel *wind* and disperse *cold*, eliminate *dampness* and invigorate meridians.

Indications Obstruction of *qi* and blood with pain due to accumulation of *wind*, *cold* and *dampness* with manifestations of painful and immobilized joints, local aversion to *cold*, numbness of limbs, and painful lower back and legs.

Usage and dosage 1 pill, twice a day.

Precaution Be cautious about pregnant women.

Strength 7 g per pill

Storage Preserve in tightly closed containers.

Qufeng Zhitong Pian (祛风止痛片)

Qufeng Zhitong Tablets

Ingredients Herba Erodii seu Geranii 334 g; Herba Visci 167 g; Radix Dipsaci 167 g; Radix Clematidis 83 g; Radix Angelicae Pubescentis 83 g; Radix Aconiti Kusnezoffii Preparata 83 g; Flos Carthami 83 g.

Procedure Pulverize Radix Clematidis and Radix Angelicae Pubescentis to fine powders and sift. Decoct the other five ingredients with water twice, each for 3 hours, filter, and combine the filtrate. Concentrate the filtrate to a thin extract with a relative density of 1.18-1.20 (80℃). Add the above powder, mix thoroughly, dry, pulverize, add a quantity of syrups simplex, make granules, dry, make into 1000 tablets and coat with sugar.

Description Sugar-coated tablets with brownish-black core; taste, bitter, astringent.

Identification Pulverize 6 tablets to fine powder, add 10 ml of ether, ultrasonicate for 15 minutes. Filter and evaporate the filtrate, dissolve the residue in 1 ml of ethyl acetate as the test solution. Prepare a solution with 0.2 g of Radix Angelicae Pubescentis reference drug in the same manner as

the reference drug solution. Carry out the method for thin layer chromatography (Appendix Ⅵ B), using silica gel G as the coating substance and a mixture of *n*-hexane, benzene and ethyl acetate (2∶1∶1) as the mobile phase. Apply separately 5 μl of each of the two solutions to the plate. After developing and removing of the plate, dry in air, examine under ultraviolet light at 365 nm. The fluorescent spots in the chromatogram obtained with the test solution correspond in position and colour to the spots in the chromatogram obtained with the reference drug solution.

Other requirements Comply with the general requirements for tablets (Appendix Ⅰ D).

Action To expel *cold* and *wind*, reinforce the liver and kidney, and tone up tendons and bones.

Indications Obstruction of *qi* and blood with pain due to accumulation of *wind*, *cold* and *dampness* and deficiency in the liver and kidney with manifestations of swollen joints, painful lower back and knees and numbness of limbs.

Usage and dosage 6 tablets, 2 times a day.

Precaution Contraindicated for pregnant women.

Storage Preserve in tightly closed containers.

Renqing Changjue (仁青常觉)

Renqing changjue Pills

Renqing Changjue pills are prescription used by Tibetan Nationality, prepared from Margarita, Cinnabaris, Lignum Santali Albi, Lignum Dalbergiae Odoriferae, Lignum Aquilariae Resinatum, Fructus Chebulae, Calculus Bovis, Moschus and Stigma Croci, etc.

Description Black watered pills; odour, slightly aromatic; taste, sweet, slightly bitter and astringent.

Identification (1) To 1 g of the pills, finely powdered, add 20 ml of methanol, ultrasonicate for 20 minutes, and filter. Evaporate the filtrate to dryness, and dissolve the residue in 1 ml of methanol as the test solution. Prepare a solution with 20 mg Stigma Croci reference drug in the same manner as the reference drug solution. Carry out the method for thin layer chromatography (Appendix Ⅵ B), using silica gel G mixed with sodium carboxymethylcellulose as the coating substance and a mixture of ethyl acetate, formic acid, and water (4∶1∶1) as the mobile phase. Apply separately 10 μl of the test solution and 5 μl of the reference drug solution to the plate. After developing and removing the plate, dry in air. The yellow spots in the chromatography obtained with the test solution correspond in position and colour to the spots in the chromatography obtained with the reference drug solution.

(2) To 1 g of the pills, finely powdered, add 20 ml of a mixture of hydrochloric acid and methanol (1∶100), ultrasonicate for 20 minutes and filter. Evaporate the filtrate to dryness, dissolve the residue in 1 ml of a mixture of hydrochloric acid and methanol (1∶100) as the test solution. Dissolve a quantity of berberine hydrochloride CRS in methanol to prepare a reference solution containing 0.2 mg per ml. Carry out the method for thin layer chromatography (Appendix Ⅵ B), using silica gel G mixed with sodium carboxymethylcellulose as the coating substance and a mixture of toluene, ethyl acetate, isopropanol, methanol, and water (6∶3∶1.5∶1.5∶0.3) as the mobile phase. Apply separately 10 μl of the test solution and 5 μl of the reference solution to the plate. After developing in a chamber pre-equilibrated with concentrated ammonia vapour for 15 minutes, remove the plate, dry in air. Examine under ultraviolet light at 365 nm. The bright-yellow fluorescent spot in the chromatography obtained with the test solution corresponds in position and colour to the spot in the chromatography obtained with the reference solution.

(3) To 2 g of the pills, finely powdered, add 30 ml of ether, and heat under reflux for 30 minutes. Filter, evaporate the filtrate to dryness, and dissolve the residue in 1 ml of chloroform as the test solution. To 0.3 g of Fructus Cnidii reference drug, add 5 ml of methanol, ultrasonicate for 10 minutes, allow to stand, and use the supernatant as the reference drug solution. Carry out the method for thin layer chromatography (Appendix Ⅵ B), using silica gel G mixed with sodium carboxymethylcellulose as the coating substance and a mixture of petroleum ether (30-60℃) and ethyl acetate (4∶1) as the mobile phase. Apply separately 10 μl of the test solution and 5 μl of the reference drug solution to the plate. After developing and removing the plate, dry in air. Examine under ultraviolet light at 365 nm. The blue fluorescent spots in the chromatography obtained with the test solution correspond in position and colour to the

spots in the chromatography obtained with the reference drug solution.
(4) Dissolve a quantity of dehydrocostuslactone CRS in methanol to prepare a reference solution containing 0.5 mg per ml. Carry out the method for thin layer chromatography (Appendix Ⅵ B), using silica gel G mixed with sodium carboxymethylcellulose as the coating substance and a mixture of cyclohexane, chloroform, and ethyl acetate (10∶1∶1) as the mobile phase. Apply separately 10 μl of the test solution, obtained under the Identification (3), and 5 μl of the reference solution to the plate. After developing and removing the plate, dry in air. Spray with 1% vanillin in 10% ethanol, and heat to the spots clear. The blue spot in the chromatography obtained with the test solution corresponds in position and colour to the spot in the chromatography obtained with the reference solution.
(5) To 0.1 g of Benzoinum reference drug, add 5 ml of methanol, and ultrasonicate for 10 minutes. Allow to stand, use the supernatant as the reference drug solution. Carry out the method for thin layer chromatography (Appendix Ⅵ B), using silica gel G mixed with sodium carboxymethylcellulose as the coating substance and a mixture of petroleum ether (60-90℃) and ethyl acetate (7∶3) as the mobile phase. Apply separately 10 μl of the test solution, obtained under the Identification (3), and 5 μl of the reference drug solution to the plate. After developing and removing the plate, dry in air. Spray with 10% sulfuric acid in ethanol, and examine under ultraviolet light at 365 nm. The yellow-green fluorescent spots in the chromatography obtained with the test solution correspond in position and colour to the spots in the chromatography obtained with the reference drug solution.
(6) To 1 g of the pills, finely powdered, add 20 ml of ethanol, ultrasonicate for 20 minutes. Filter, evaporate the filtrate to dryness, dissolve the residue in 1 ml of ethanol as the test solution. Dissolve a quantity of gallic acid CRS in ethanol to prepare a reference solution containing 0.5 mg per ml. Carry out the method for thin layer chromatography (Appendix Ⅵ B), using silica gel G mixed with sodium carboxymethylcellulose as the coating substance and a mixture of chloroform, ethyl acetate, and formic acid (6∶4∶1) as the mobile phase. Apply separately 10 μl of the test solution, and 5 μl of the reference solution to the plate. After developing and removing the plate, dry in air. Spray with 2% solution of ferric chloride in ethanol. The dark spot in the chromatography obtained with the test solution corresponds in position and colour to the spot in the chromatography obtained with the reference solution.

Other requirements Comply with the general requirements for pills (Appendix Ⅰ A), except disintegration test.

Action To remove *heat* and conteract *toxicity*, and build up health by regulation of the stomach.

Indications "*Long*, *Chiba*, *peigen*" diseases, chronic gastrointestinal inflammation, ulcer, "*Mubu*" disease, atrophic gastritis, poisoning, syphilis, leprosy and febrile diseases, anthrax, pain due to the sores, "*Gan Huang Shui*" and purulence, etc.

Usage and dosage 1 g, once a day in serious cases; generally, once for every 3-7 or 10 days; or infuse it in boilling water or wine, taken at dawn with an empty stomach.

Precaution It is forbidden to eat any kind of meat and sour food and have sexual activity 3 days before taking it; avoid sour, rotten, raw or cold foods; never cateh cold.

Strength (1) 1 g per 4 pills (2) 1 g per pill

Storage Preserve in tightly closed containers.

Renqing Mangjue (仁青芒觉)

Renqing Mangjue Pills

Renqing Mangjue pills are prescription used by Tibetan Nationality, prepared from Fructus Terminaliae Billericae, Fructus Syzygii, Stigma Croci, Calculus Bovis, Moschus, Semen Strychni, and Cinnabaris, etc.

Description Blackish-brown watered pills; odour, aromatic; taste, bitter, sweet and astringent.

Identification (1) To 1 g of the pills, finely powdered, add 4 ml of methanol, stopper closely, shake for 5-10 minutes, allow to stand, and use the supernatant as the test solution. Prepare a solution with 20 mg of Stigma Croci reference drug as in the same manner the reference drug solution. Carry out the method for thin layer chromatography (Appendix Ⅵ B), using silica gel G as the coating substance and a mixture of ethyl acetate, formic acid, and water (4∶1∶1) as the mobile phase. Apply separately 10 μl each of the two solutions to the plate. After developing and removal of the plate, dry in air. The yellow spots in the chromatogram obtained with the test solution correspond in position and colour to the spots in the chromatogram obtained with the reference drug solution.
(2) To 2 g of the pills, finely powdered, add 30 ml of ether, and heat under reflux for 30 minutes. Filter, and keep the residue for latter use. Evaporate the filtrate to dryness, and dissolve the residue in 1 ml of chloroform as the test solution. Dissolve a quantity of dehydrocostuslactone CRS in chloroform to prepare a solution containing 0.5 mg per ml as the reference solution. Carry out the method for thin layer chromatography (Appendix Ⅵ B), using silica gel G mixed with sodium carboxymethylcellulose as the coating substance and a mixture of cyclohexane, chloroform and ethyl acetate (10∶1∶1) as the mobile phase. Apply separately 10 μl of the test solution and 5 μl of the reference drug solution to the plate. After developing and removal of the plate, dry in air. Spray with 1% vanillin in 10% ethanol, heat to the spots clear. The blue spot in the chromatography obtained with the test solution corresponds in position and colour to the spot in the chromatography obtained with the reference solution.
(3) Evaporate the residue, obtained under Identification (2), to dryness, add 20 ml of ethyl acetate, and heat under reflux for 30 minutes. Filter, evaporate the filtrate to dryness, and dissolve the residue in 1 ml of ethyl acetate as the test solution. To 0.2 g of Rhizoma Curcumae Longae reference drug, add 5 ml of methanol, ultrasonicate for 10 minutes, allow to stand, and use the supernatant as the reference drug solution. Carry out the method for thin layer chromatography (Appendix Ⅵ B), using silica gel G mixed with sodium carboxymethylcellulose as the coating substance and a mixture of chloroform, methanol, and formic acid (9∶0.4∶0.6) as the mobile phase. Apply separately 5 μl of each of the test solution and the reference drug solution to the plate. After developing and removal of the plate, dry in air. Examine under ultraviolet light at 365 nm. The bright-yellow fluorescent spots in the chromatography obtained with the test solution correspond in position and colour to the spots in the chromatography obtained with the reference drug solution.
(4) To 0.2 g of Flos Caryophylli reference drug, add 5 ml of methanol, ultrasonicate for 10 minutes, allow to stand,

and use the supernatant as the reference drug solution. Carry out the method for thin layer chromatography (Appendix Ⅵ B), using silica gel G mixed with sodium carboxymethylcellulose as the coating substance and a mixture of petroleum ether (60-90℃), ethyl acetate, and formic acid (9 : 1 : 0.2) as the mobile phase. Apply separately 10 μl of the test solution, obtained under Identification (2), and 5 μl of the reference drug solution to the plate. After developing and removal of the plate, dry in air. Spray with 10% sulfuric acid in ethanol, and heat to the spots clear. Examine under ultraviolet light at 365 nm. The yellow fluorescent spots in the chromatography obtained with the test solution correspond in position and colour to the spots in the chromatography obtained with the reference drug solution.

(5) To 2 g of the pills, finely powdered, add 30 ml of a mixture of chloroform, methanol, and concentrated ammonia TS (75 : 25 : 5), ultrasonicate for 20 minutes. Filter, evaporate the filtrate to dryness, and dissolve the residue in 20 ml of chloroform. Transfer to a separating funnel, extract by shaking with two 10-ml quantities of water, separate the chloroform layer, and dehydrate with anhydrous sodium sulfate. Filter, evaporate the filtrate to dryness, and dissolve the residue in 1 ml of chloroform as the test solution. To 0.5 g Radix Gentianae Macrophyllae reference drug, add 5 ml of methanol, ultrasonicate for 20 minutes, allow to stand, and use the supernatant as the reference drug solution. Carry out the method for thin layer chromatography (Appendix Ⅵ B), using silica gel G mixed with sodium carboxymethylcellulose as the coating substance and a mixture of benzene and ethanol (9:1.5) as the mobile phase. Apply separately 15 μl of the test solution and 10 μl of the reference drug solution to the plate. After developing in a chamber pre-equilibrated with concentrated ammonia vapour for 15 minutes, remove the plate and dry in air. Examine under ultraviolet light at 365 nm. The yellow fluorescent spots in the chromatogram obtained with the test solution correspond in position and colour to the spots in chromatogram obtained with the reference drug solution.

(6) To 2 g of the pills, finely powdered, add 30 ml of methanol, ultrasonicate for 20 minutes. Filter, evaporate the filtrate to dryness, and dissolve the residue in 20 ml of sulfuric acid solution (2→500). Transfer to a separating funnel, extract by shaking with two 15-ml quantities of ethyl acetate. Combine the ethyl acetate extracts, evaporate to dryness, and dissolve the residue in 1 ml of methanol as the test solution. Dissolve a quantity of cholic acid CRS in methanol to prepare a solution containing 1 mg per ml as the reference solution. Carry out the method for thin layer chromatography (Appendix Ⅵ B), using silica gel G mixed with sodium carboxymethylcellulose as the coating substance and a mixture of chloroform, ethyl acetate, and formic acid (1:1:0.1) as the mobile phase. Apply separately 10 μl of the test solution and 5 μl of the reference solution to the plate. After developing and removal of the plate, dry in air. Spray with 10% sulfuric acid in ethanol, and heat to the spots clear. Examine under ultraviolet light at 365 nm. A blue fluorescent spot in the chromatography obtained with the test solution corresponds in position and colour to the spot in the chromatography obtained with the reference solution.

Other requirements Comply with the general requirements for pills (Appendix Ⅰ A), except disintegration test.

Assay Carry out the method for high performance liquid chromatography (Appendix Ⅵ D).

Chromatographic system and system suitability Use octadecylsilane bonded silica gel as the stationary phase and a mixture of methanol and a solution of potassium dihydrogen phosphate (0.01 mol/L, adjust pH value to 2.5 with 10% solution of phosphate acid) (25:75) as the mobile phase. As detector a spectrophotometer set at 254 nm. The number of theoretical plates of the column is not less than 2000, calculated with the reference to the peak of strychnine.

Reference solution Weigh accurately about 100 mg of strychnine CRS to a 50 ml of volumetric flask, dissolve in methanol and dilute to volume, mix well. Measure accurately 1 ml to a 10 ml of volumetric flask, dilute to volume with mobile phase, mix well as the reference solution.

Test solution Weigh accurately 0.9 g of the powder (through No. 3 sieve), to a stopper conical flask, add accurately 50 ml of chloroform and 2 ml of concentrated ammonia TS, stopper well, and shake gently. Weigh, allow to stand for 24 hours, weigh again, replenish the lost weight with chloroform, mix well, and filter. Measure accurately 20 ml of the successive filtrate to a separating funnel, and extract by shaking with five 20-ml quantities of sulfuric acid solution (3→100). Combine the extracts, adjust pH value to 9-10 with concentrated ammonia TS, extract with five 20-ml quantities of chloroform, combine the chloroform extracts, and recover to dryness in vacuum. Dissolve the residue in mobile phase, transfer to a 10 ml of volumetric flask, dilute to volume, and mix well. Filter, and use the successive filtrate as the test solution.

Procedure Inject accurately 5 μl of the reference solution and 10 μl of the test solution into the column, and calculate the content.

It contains not less than 0.20 mg and not more than 0.60 mg of strychnine ($C_{21}H_{22}N_2O_2$) per pill, referred to Semen Strychni.

Action To remove heat and contract toxicity, reinforce the liver and stomach, cure sores, improve vision, induce resuscitation and build up heacth.

Indications Various kinds of poisoning, "Peigen" and "Mubu" diseases, digestive ulcers, acute and chronic gastrointestinal disorders, atrophic gastritis, ascites and leprosy.

Usage and dosage 1 pill, once a day, crushed and taken with boiled water.

Precaution It is forbidden to eat sour, rotten, raw and cold foods. Never catch cold.

Strength 1-1.5 g per pill

Storage Preserve in tightly closed containers.

Renshen Jianpi Wan (人参健脾丸)

Renshen Jianpi Pills

Ingredients Radix et Rhizoma Ginseng 25 g; Rhizoma Atractylodis Macrocephalae (stir-baked with bran) 150 g; Poria 50 g; Rhizoma Dioscoreae 100 g; Pericarpium Citri Reticulatae 50 g; Radix Aucklandiae 12.5; Fructus Amomi 25 g; Radix Astragali Praeparata Cum Melle 100 g; Radix Angelicae Sinensis 50 g; Semen Ziziphi Spinosae (stir-baked) 50 g; Radix Polygalae (Processed) 25 g.

Procedure Pulverize the above eleven ingredients to fine powder, sift and mix well. To each 100 g of the powder add 40-50 g refined honey and a quantity of water to make water-honeyed pills and dry; or add 110-120 g of refined honey to make big honeyed pills.

Description Brown to brownish-black water-honeyed pills or

big honeyed pills; odour, aromatic; taste, sweet, and slightly bitter.

Identification (1) Microscopical: Raphides of calcium oxalate occurring in mucilage cells, 80-240 μm long, 2-5 μm in diameter. Clusters of calcium oxalate 20-68 μm in diameter, with acute angles. Sclerenchymatous cells of tegmen yellowish-brown or brownish-red, subpolygonal in surface view, walls thickened, lumina containing silica bodies.
(2) Pulverize 8 g of the water-honeyed pills to fine powder, or triturate well 12 g of the big honeyed pills, in pieces, with 6 g of kieselguhr. Transfer to a Soxhlet's extractor, and heat under reflux with 100 ml of methanol for 3 hours. Allow to cool, filter, evaporate the filtrate to dryness, and dissolve the residue in 30 ml of water. Transfer to a separating funnel, extract with three 20-ml quantities of *n*-butanol saturated with water, combine the *n*-butanol extracts, and wash with two 20-ml quantities of ammonia TS. Separate the *n*-butanol, evaporate to dryness, dissolve the residue in 30 ml of water and filter. Apply the filtrate to a column (1.5 cm in diameter, 12 cm long) packed with macroporous absorbance resin D101, pre-elute first with 50 ml of water, and then elute with 30 ml of 70% ethanol, discard the eluates. Elute again with 50 ml of 70% ethanol, collect the 70% ethanol eluates and evaporate to dryness, dissolve the residue in 0.5 ml of methanol as the test solution. Dissolve ginsenoside Rg_1 CRS, ginsenoide Re CRS, ginsenoide Rb_1 CRS and astragaloside Ⅳ CRS in methanol respectively to produce reference solutions containing 1 mg of each per ml. Carry out the method for thin layer chromatography (Appendix Ⅵ B), using silica gel G as the coating substance and the lower layer of a mixture of chloroform, methanol, and water (13∶6∶2), standing below 10℃ over night, as the mobile phase. Apply separately 5-10 μl each of the test solution and the four reference solutions to the plate. After developing and removing the plate, dry in air. Spray with the 10% sulfuric acid in ethanol, and heat at 105℃ to the spots clear. The spots in the chromatography obtained with the test solution correspond in position and colour to the spots in the chromatography obtained with the reference solutions.
(3) Pulverize 8 g of the water-honeyed pills to fine powder, or triturate well 12 g of the big honeyed pills, in pieces, with 6 g of kieselguhr. Add 30 ml of ether, heat under reflux for 20 minutes, and allow to cool. Filter, evaporate the filtrate to dryness, and dissolve the residue in 0.5 ml of ethyl acetate as the test solution. Prepare a solution with 1 g of Radix Angelicae Sinensis reference drug in the same manner as the reference drug solution. Carry out the method for thin layer chromatography (Appendix Ⅵ B), using silica gel G as the coating substance and a mixture of *n*-hexane and ethyl acetate (9∶1) as the mobile phase. Apply separately 5 μl of each of the test solution and the reference drug solution to the plate. After developing and removing the plate, dry in air. Examine under ultraviolet light at 365 nm. The fluorescent spots in the chromatography obtained with the test solution correspond in position and colour to the spots in the chromatography obtained with the reference drug solution.
(4) To 0.5 g of Rhizoma Atractylodis Macrocephalae reference drug, add 2 ml of *n*-hexane, and ultrasonicate for 15 minutes. Filter, and use the filtrate as the reference drug solution. Carry out the method for thin layer chromatography (Appendix Ⅵ B), using silica gel G as the coating substance and a mixture of petroleum ether (60-90℃) and ethyl acetate (50∶1) as the mobile phase. Apply separately 10 μl of each of the test solution, obtained under Identification (3), and the reference drug solution to the plate. After developing in a chamber pre-equilibrated with the mobile phase for 15 minutes, remove the plate, and dry in air. Spray with 5% vanillin in sulfuric acid, and heat to the spots clear. The spots, including a pink spot as the main spot, in the chromatography obtained with the test solution correspond in position and colour to the spots in the chromatography obtained with the reference drug solution.

Other requirements Comply with the general requirements for pills (Appendix Ⅰ A).

Assay Carry out the method for high performance liquid chromatography (Appendix Ⅵ D).

Chromatographic system and system suitability Use octadecylsilane bonded silica gel as the stationary phase and a mixture of methanol, acetate acid, and water (35∶4∶61) as the mobile phase. As detector a spectrophotometer set at 284 nm. The number of theoretical plates of the column is not less than 2000, calculated with the reference to the peak of hesperidin.

Reference solution Weigh accurately a quantity of hesperidin CRS, dissolve in methanol to produce a reference solution containing 0.25 mg per ml.

Test solution Pulverize a quantity of the water-honeyed pills to fine powder, weigh accurately 4 g; or cut a quantity of big honeyed pills into pieces, weigh accurately about 6 g, triturate well with 6 g of kieselguhr to form a flake, and cut into pieces. Transfer to a Soxhlet's extractor, heat under reflux with 80 ml of petroleum ether (60-90℃) for 3 hours. Discard the petroleum ether extract, expel solvent remained in the residue, add 80 ml of methanol, heat under reflux for 5 hours, allow to cool, and filter. Transfer the filtrate to a 100 ml volumetric flask, wash the container with a small quantity of methanol for several times, filter the washings to the same flask, dilute with methanol to volume, and mix well as the test solution.

Procedure Inject accurately 10 μl of each of the reference solution and the test solution into the column, respectively, and calculate the content.
It contains not less than 6.9 mg of hesperidin ($C_{28}H_{34}O_{15}$) per pill for each big honeyed pills, and 1.7 mg per gram for small honeyed pills, referred to Pericarpium Citri Reticulatae.

Action To invigorate *spleen-qi* and harmonize the stomach function to stop diarrhea.

Indications Indigestion, fullness and discomfort in the stomach, nausea, vomiting, abdominal pain, loose stools, poor appetite, and lassitude due to deficiency in the spleen and stomach.

Usage and dosage 2 big honeyed pills or 8 g of water-honeyed pills, twice a day.

Strength 6 g per big honeyed pill

Storage Preserve in tightly closed containers.

Renshen Yangrong Wan (人参养荣丸)

Renshen Yangrong Pills

Ingredients Radix et Rhizoma Ginseng 100 g; Rhizoma Atractylodis Macrocephalae (stir-baked with Terra Flava Usta) 100 g; Poria 75 g; Radix et Rhizoma Glycyrrhizae Praeparata Cum Melle 100 g; Radix Angelicae Sinensis 100 g; Radix Rehmanniae Praeparata 75 g; Radix Paeoniae Alba (stir-baked with bran) 100 g; Radix Astragali Praeparata 100 g; Pericarpium Citri Reticulatae 100 g; Radix Polygalae (processed) 50 g; Cortex Cinnamomi 100 g; Fructus

Schisandrae Chinensis (steamed with wine) 75 g.

Procedure Pulverize the above twelve ingredients to fine powder, sift and mix well. Decoct 50 g of Rhizoma Zingiberis Recens and 100 g of Fructus Jujubae with water in portions until the drugs are exhausted, filter. To 100 g of the powder add 35-50 g of refined honey and the above filtrate, make water-honeyed pills; or add 90-100 g of refined honey and the above filtrate, stir well, and make big honeyed pills.

Description Brown water-honeyed pills or big honeyed pills; taste, sweet and slightly pungent.

Identification (1) Microscopical: Irregular branched masses colourless, dissolved in chloral hydrate TS; hyphae colourless or pale brown. Clusters of calcium oxalate 20-68 μm in diameter, acute angled. Stone cells subrounded or rectangular, 32-88 μm in diameter with very thin walls at one side. Fibres in bundles or scattered, thick-walled, with longitudinal fissures on the surface, both ends usually broken to broom-like or relatively truncate. Fibre bundles surrounded by parenchymatous cells containing prisms of calcium oxalate, forming crystal fibres. Stone cells of testa pale yellow or pale yellowish-brown, polygonal in surface view, walls relatively thickened, with fine and dense pit-canals, lumina containing dark brown contents. Clusters of calcium oxalate 18-32 μm in diameter, occurring in parenchymatous cells, often arranged in rows, or several clusters in a cell. Parenchymatous cells brownish-yellow to blackish-brown, cells mostly shrunken and each containing a brown nucleous-like mass. Needle crystals of calcium oxalate fine, 10-32 μm long, irregularly filling in parenchymatous cells. Parenchymatous cells fusiform, walls slightly thickened, with extremely minute oblique crisscross striations, prisms of calcium oxalate aggregated in parenchyma in group. Cork cells polygonal, subsquare and subrectangular in surface view, anticlinal walls relatively thin, pitted and interrupted.

(2) Triturate well 18 g with 10 g of kieselguhr, extract with successive quantities of 100, 50 and 50 ml of 7% solution of sulfuric acid under grinding, and centrifuge. Heat the acid-aqueous solution under reflux on a water bath for 1 hour, and cool. Extract with three 50-ml quantities of petroleum ether (30-60℃) by shaking, combine the petroleum ether solutions, and evaporate to dryness. Dissolve the residue in 0.5 ml of dehydrated ethanol as the test solution. Dissolve separately panaxadiol CRS and panaxatriol CRS in dehydrated ethanol to produce two solutions containing 1 mg of each per ml as the reference solutions. Carry out the method for thin layer chromatography (Appendix Ⅵ B), using silica gel G as the coating substance and a mixture of ether and chloroform (1∶1) as the mobile phase. Apply separately 10 μl of the test solution and 5 μl of each of the reference solutions to the plate. After developing and removal of the plate, dry in air. Spray with 10% sulphuric acid in ethanol and heat at 105℃ to the spots clear. Examine under ultraviolet light at 365 nm. The fluorescent spots in the chromatogram obtained with the test solution correspond in position and colour to the spots in the chromatogram obtained with the reference solutions.

(3) Triturate well 9 g with 9 g of kieselguhr, transfer to a Sohxlet's extractor, add a quantity of methanol, extract under reflux on a water bath until the extract becomes colourless, evaporate the extract to dryness. Dissolve the residue in 30 ml of water, extract with three 20-ml quantities of *n*-butanol saturated with water by shaking. Combine the *n*-butanol extracts, wash with 20 ml of water, and discard the water solution. Evaporate the *n*-butanol extracts to about 1 ml, add 2 g of neutral aluminium oxide, mix stir well on a water bath, dry, and apply it to a previously prepared small column (1-1.5 cm in diameter) packed with neutral aluminium oxide (200 mesh, 2 g), elute with 50 ml of the mixture of ethyl acetate and methanol (1∶1). Collect the eluate and evaporate to dryness. Dissolve the residue in 1 ml of ethanol and use the supernatant as the test solution. Dissolve paeoniflorin CRS in ethanol to produce a solution containing 1 mg per ml as the reference solution. Carry out the method for thin layer chromatography (Appendix Ⅵ B), using silica gel G as the coating substance and a mixture of chloroform, ethyl acetate, methanol and formic acid (40∶5∶10∶0.2) as the mobile phase. Apply separately 10 μl of the test solution and 5 μl of the reference solution to the plate. After developing and removal of the plate, dry in air. Spray with 10% sulfuric acid in ethanol and heat at 105℃ to the spots clear. The spot in the chromatogram obtained with the test solution corresponds in position and colour to the spot in the chromatogram obtained with the reference solution.

(4) Cut 9 g into pieces, transfer to a round-bottomed flask and add 200 ml of water. Carry out the method for determination of volatile oil (Appendix Ⅹ D). Add water through the top of the apparatus until fills the collector and overflows to the flask, then add 2 ml of ethyl acetate, heat under reflux for 1 hour, separate the ethyl acetate layer, and evaporate to about 0.25 ml as the test solution. Prepare a solution with 0.5 g of Radix Angelicae Sinensis reference drug in the same manner as the reference drug solution. Dissolve cinnamaldehyde CRS in ethyl acetate to produce a solution containing 1 μl per ml as the reference solution. Carry out the method for thin layer chromatography (Appendix Ⅵ B), using silica gel G as the coating substance and a mixture of *n*-hexane and ethyl acetate (9∶1) as the mobile phase. Apply separately 2-6 μl of the test solution, 2 μl of each of the reference drug solution and the reference solution to the plate. After developing and removal of the plate, dry in air. Examine under ultraviolet light at 365 nm. The fluorescent spots in the chromatogram obtained with the test solution correspond in position and colour to the spots in the chromatogram obtained with the reference drug solution. Spray with a solution of alcoholic dinitrophenylhydrazine TS and heat to the spots clear. The spot in the chromatogram obtained with the test solution corresponds in position and colour to the spot in the chromatogram obtained with the reference solution.

(5) Triturate well 9 g with 4.5 g of kieselguhr, add 50 ml of water, grind well and centrifuge, discard the supernatant, and dissolve the residue in 50 ml of water. Repeat these procedures twice, then dry at 50℃ for 3 hours, transfer the residue to a Sohxlet's extractor. Add 80 ml of petroleum ether (60-90℃), heat under reflux on a water bath for 1 hour, and discard the petroleum ether. Evaporate the residue to dryness, add 80 ml of methanol, heat under reflux on a water bath until the extract solution becoming colourless. Cool, filter, and evaporate the filtrate to about 1 ml as the test solution. To 0.5 g of Pericarpium Citri Reticulatae reference drug, add 5 ml of methanol, ultrasonicate for 5 minutes, filter and use the filtrate as the reference drug solution. Dissolve hesperidin CRS in methanol to produce a saturated solution as the reference solution. Carry out the method for thin layer chromatography (Appendix Ⅵ B), using silica gel G as the coating substance mixed with 0.5% solution of sodium hydroxide and a mixture of ethyl acetate, methanol and water (100∶17∶13) as the mobile phase. Apply separately 0.5 μl of each of the three solutions to the plate. Develop the chromatogram until the solvent front has moved about 3 cm, remove the plate and allow to dry in air. Develop the chromatogram once more, using the upper layer of a mixture of toluene, ethyl acetate, formic acid and water (20∶10∶1∶1) as the mobile phase, until the solvent front has moved about 8 cm, remove the plate, and allow to dry in air. Spray with 1% aluminium chloride TS. Examine under

ultraviolet light at 365 nm. The fluorescent spots in the chromatogram obtained with the test solution correspond in position and colour to the spots in the chromatograms obtained with both the reference drug solution and the reference solution.

Other requirements Comply with the general requirements for pills (Appendix Ⅰ A).

Assay Carry out the method for high performance liquid chromatography (Appendix Ⅵ D)

Chromatographic system and system suitability Use octadecylsilane bonded silica gel as the stationary phase and a mixture of methanol and 0.11% solution of acetic acid (40∶60) as the mobile phase. As detector a spectrophotometer set at 283 nm, the number of theoretical plates of the column is not less than 2000, calculated with the reference to the peak of hesperidin.

Reference solution Dissolve a quantity of hesperidin CRS, accurately weighed, in methanol to prepare a solution containing 30 μg per ml as the reference solution.

Test solution Pulverize the water-honeyed pills, weigh accurately 0.8 g; or cut the big honeyed pills, obtained in the test of packing variation, into pieces, weigh accurately 1.0 g; Transfer to a stopper conical flask, add accurately 50 ml of methanol, stopper well, and weigh. Ultrasonicate (power, 250 W; frequency, 33 kHz) for 1 hour, cool, weigh again, replenish the loss of weight with methanol, shake well, and use the successive filtrate as the test solution.

Procedure Inject accurately 10 μl of the reference solution and 5-10 μl of the test solution into the column, and calculate the content.
It contains not less than 2.0 mg of hesperidin ($C_{28}H_{34}O_{15}$) per gram for water-honeyed pill, 13 mg per pill for big honeyed pill, referred to Pericarpium Citri Reticulatae.

Action To reinforce *qi* and blood with herbs warm in property.

Indications Emaciation, lassitude, loss of appitite and loose stools due to a deficiency of *qi* and blood, and weakness after an illness.

Usage and dosage 6 g of water-honeyed pills, 1 big honeyed pill, 1-2 times a day.

Strength 9 g per big honeyed pill

Storage Preserve in tightly closed containers.

Renshen Zaizao Wan
(人参再造丸)

Renshen Zaizao Pills

Ingredients Radix et Rhizoma Ginseng 100 g; Agkistrodon (stir-baked with wine) 100 g; Herba Pogostemonis 100 g; Lignum Santali Albi 50 g; Fructus Caryophylli 50 g; Radix Scrophulariae 100 g; Radix et Rhizoma Aseri 50 g; Rhizoma Cyperi (processed with vinegar) 50 g; Pheretima 25 g; Radix Rehmanniae Praeparata 100 g; Radix et Rhizoma Notoginseng 25 g; Olibanum (processed with vinegar) 50 g; Pericarpium Citri Reticulatae Viride 50 g; Fructrus Amomi Rotundus 50 g; Radix Saposhnikoviae 100 g; Radix Polygoni Multiflori Praeparata Cum Succo Glycines Sotae 100 g; Rhizoma Chuanxiong 100 g; Rhizoma Wenyujin Concisum 12.5 g; Radix Astragali 100 g; Radix et Rhizoma Glycyrrhizae 100 g; Rhizoma Coptidis 100 g; Poria 50 g; Radix Paeoniae Rubra 100 g; Radix et Rhizoma Rhei 100 g; Herba Taxilli 100 g; Radix Puerariae Lobatae 75 g; Herba Ephedrae 100 g; Rhizoma Drynarize (stir-baked) 50 g; Scorpio 75 g; Os Pardi (processed) 50 g; Bombyx Batryticatus (stir-baked) 50 g; Radix Aconiti Lateralis (processed) 50 g; Succinum 25 g; Plastrum Testudinis (processed with vinegar) 50 g; Rhizama Dioscoreae Hypoglaucae 100 g; Rhizoma Atractylodis Macrocephalae (stir-baked with bran) 50 g; Lignum Aquilariae Resinatrm 50 g; Rhizoma Gastrodiae 100 g; Cortex Cinnamoni 100 g; Radix Angelicae Dahuricae 100 g; Myrrha (processed with vinegar) 50 g; Radix Angelicae Sinensis 50 g; Semen Alpiniae katsumadai 100 g; Radix Clematidis 75 g; Radix Linderae 50 g; Rhizoma seu Radix Notopterygii 100 g; Exocarpium Citri Rubrum 200 g; Massa Medicata Fermentata (stir-baked with bran) 200 g; Cinnabaris 20 g; Sanguis Draconis 15 g; Moschus 5 g; Broneolum Syntheticum 5 g; Calculus Bovis 5 g; Concretio Silicea Bambusae 50 g; Arisaema Cum Bile 50 g; Pulvis Cornus Bubali Concentratus 30 g.

Procedure Levigate respectively Cinnabaris and Succinum to fine powder, pulverize Radix Ginseng and the other forty-seven ingredients, except Broneolum Suntheticum, Sanguis Draconis, Calculus Bovis, Pulvis Cornus Bubali Concentratus, Moschus and Concretio Silicea Bambusae, to fine powder. Triturate Broneolum Suntheticum, Sanguis Draconis, Calculus Bovis, Cornu Bubali, Moschus and Concretio Silicea Bambusae with the above two fine powders, sift and mix well. To each 100 g of the powder add 100-110 g of refined honey to make big honeyed pills.

Description Black big honeyed pills; taste, sweet, slightly bitter.

Identification (1) Microscopical: Fragments of body walls pale yellow to yellow, with reticulated striations and rounded seta pits, brown setae visible sometimes. Fragments of body walls colourless, with very fine hyphae on surface. Resin canal containing yellow secretion.
(2) Cut 20 g of pills into pieces, add a quantity of kieselguhr, grind well, extract with a quantity of ether in a Soxhlet's extractor for 1 hour, remaining the residue for later use. Evaporate the ether extract to dryness at a lower temperature, and dissolve the residue in 1 ml of dehydrated ethancl as the test solution. Prepare solutions separately with 0.2 g of each of Radix Angelicae Sinensis reference drug and Rhizoma Chuanxiong reference drug in the same manner as the reference drug solutions. Carry out the method for thin layer chromatography (Appendix Ⅵ B), using silica gel G as the coating substance and a mixture of toluene and ethyl acetate (30∶1) as the mobile phase. Apply separately 10 μl of each of the solutions to the plate. After developing and removal of the plate, dry in air, examine under ultraviolet light at 365 nm. The fluorescent spots in the chromatogram obtained with the test solution correspond in position and colour to the spots in the chromatograms obtained with the Radix Angelicae Sinensis reference drug solution and the Rhizoma Chuanxiong reference drug solution.
(3) Expel the solvent from the residue remained under Identification test (2), ultrasonicate with 50 ml of methanol for 30 minutes, filter, and evaporate the filtrate to dryness. Dissolve the residue in 20 ml of water, extract with two 25-ml quantities of *n*-butanol saturated with water, combine the *n*-butanol extracts, wash with two 20-ml quantities of ammonia TS and evaporate the *n*-butanol extracts to dryness. Dissolve the residue in 10 ml of water, apply to a column (1.5 cm in diameter, 15 cm long) packed with D 101 macroporous resin. Elute with 50 ml of water, discard the water eluates, elute with 50 ml of 20% ethanol, and discard the eluates. Elute with 80 ml of 80% ethanol, collect the eluates, evaporate to dryness, and dissolve the residue in 1 ml of methanol as the test solution. Dissolve ginsenoside Re

CRS and ginsenoside Rg_1 CRS in methanol to produce a mixture containing 0.5 mg each per ml as the reference solution. Carry out the method for thin layer chromatography (Appendix Ⅵ B), using silica gel G as the coating substance and the lower layer of a mixture of chloroform, ethyl acetate, methanol and water (15∶40∶22∶10), standing below 10℃, as the mobile phase. Apply separately 10 μl of each of the two solutions in strip to the plate. After developing and removal of the plate, dry in air, spray with 10% sulfuric acid in ethanol and heat at 105℃ to the spots clear. The spots in the chromatogram obtained with the test solution correspond in position and colour to the spots in chromatogram obtained with the reference solution.

(4) Take 10 ml of the extract of a mixture of hydrochloric acid and methanol (1∶100) obtained under Assay, and concentrate to 2 ml as the test solution. Ultrasonicate 0.5 g of Rhizoma Coptidis reference drug with 5 ml of a mixture of hydrochloric acid and methanol (1∶100) for 10 minutes and use the supernatant as the reference drug solution. Dissolve berberine hydrochloride CRS in methanol to produce a solution containing 0.2 mg per ml as the reference solution. Carry out the method for thin layer chromatography (Appendix Ⅵ B), using silica gel G as the coating substance and a mixture of benzene, ethyl acetate, isopropanol, methanol and concentrated ammonia TS (12∶6∶3∶3∶1) as the mobile phase. Apply separately 5 μl of each of the three solutions to the plate. After developing in a chamber pre-equilibriated with ammonia vapour and removal of the plate, dry in air, and examine under ultraviolet light at 365 nm. The fluorescent spots in the chromatogram obtained with the test solution correspond in position and colour to the spots in the chromatograms obtained with the reference drug solution and the reference solution.

Other requirements Comply with the general requirements for pills (Appendix Ⅰ A)

Assay Carry out the method for high performance liquid chromatography (Appendix Ⅵ D).

Chromatographic system and system suitability Use octadecylsilane bonded silica gel as the stationary phase and a mixture of acetonitrile and 0.05 mol/L solution of potassium dihydrogen phosphate (28∶72) as the mobile phase. As detector a spectrophotometer set at 345 nm. The number of theoretical plates of the column is not less than 3000, calculated with the reference to the peak of berberine hydrochloride.

Reference solution Dissolve a quantity of berberine hydrochloride CRS, accurately weighed, in methanol to prepare a solution containing 0.05 mg per 1 ml as the reference solution.

Test solution Cut the pills, obtained under the test of weight variation, into pieces, mix well, weigh accurately 5 g in a stopper conical flask, add accurately 50 ml of a mixture of hydrochloric acid and methanol (1∶100), stopper tightly, and weigh. Ultrasonicate (power, 250 W; frequency, 33 kHz) for 30 minutes, cool, weigh again, replenish the loss of weight with a mixture of hydrochloric acid and methanol (1∶100), shake well, and filter. Measure accurately 25 ml of the successive filtrate, concentrate to about 10 ml, and apply to a neutral aluminium oxide column (0.9 cm in diameter, 100-200 mesh, pre-eluted with 30 ml of methanol). Elute with 25 ml of ethanol, and collect the eluates in a 50 ml volumetric flask, dilute with ethanol to volume, shake well, filter and use the successive filtrate as the test solution.

Procedure Inject accurately 10 μl of each of the reference solution and the test solution into the column, and calculate the content.

It contains not less than 1.0 mg of berberine hydrochloride ($C_{20}H_{18}ClNO_4$) per pill, referred to Rhizoma Coptidis.

Action To replenish *qi* and nourish blood, expel *wind* and resolve *phlegm*, and promote blood circulation to dredge meridians.

Indications Stroke due to *qi* deficiency, stagnation of blood and blockage of meridians by *wind-phlegm*, with manifestations of deviated mouth and eye, hemiplegia, numb hands and feet, pain, muscular contracture and dysphasia.

Usage and dosage 1 pill, twice a day.

Precaution Contraindicated for pregnant women.

Strength 3 g per pill

Storage Preserve in tightly closed containers.

Reyanning Keli
(热炎宁颗粒)

Reyanning Granules

Ingredients Herba Taraxaci; Rhizoma et Radix Polygoni Cuspidati; Herba Sonchi Arvensis; Herba Scutellariae Barbatae.

Procedure Decoct the above four ingredients with water twice, 2 hours for the first time and 1 hour for the second time. Combine the decoctions, filter and concentrate the filtrate to a thin extract, add a quantity of sucrose powder and dextrin, mix thoroughly, dry in vacuum, pulverize to fine powder, make granules and dry; or concentrate the filtrate to a thin extract, dry by spraying, add a quantity of dextrin and stevioside, stir thoroughly, dry in vacuum, pulverize to fine powder, make granules without sucrose and dry.

Description Brown granules; taste, sweet, slightly bitter.

Identification (1) Pulverize 10 g of the granules with sucrose or 2.5 g of granules without sucrose to fine powder, add 25 ml of chloroform and ultrasonicate for 10 minutes. Filter and evaporate the filtrate to dryness, dissolve the residue in 1 ml of methanol as the test solution. Prepare a solution with 0.5 g of Rhizoma et Radix Polygoni Cuspidati reference drug in the same manner as the reference drug solution. Dissolve emodin CRS in methanol to prepare a solution containing 1 mg per ml as the reference solution. Carry out the method for thin layer chromatography (Appendix Ⅵ B), using silica gel G as the coating substance and a mixture of toluene, ethyl acetate, and formic acid (15∶2∶1) as the mobile phase. Apply 5 μl of the test solution and 2 μl of each of the reference drug solution and reference solution to the plate separately. After developing and removal of the plate, dry in air, examine under ultraviolet light at 365 nm, the yellow fluorescent spots in the chromatogram obtained with the test solution correspond in position and colour to the spots in the chromatogram obtained with the reference drug solution and reference solution.

(2) Pulverize 20 g of the granules with sucrose or 5 g of granules without sucrose to fine powder, add 50 ml of methanol, ultrasonicate for 20 minutes, and filter. Evaporate the filtrate to dryness, dissolve the residue in 20 ml of water, and adjust the pH to 2-3 with dilute hydrochloric acid TS. Extract by shaking with two 20-ml quantities of ethyl acetate, combine the ethyl acetate extracts, and evaporate to dryness. Dissolve the residue in 1 ml of methanol as the test solution. Dissolve a quantity of caffeic acid CRS in methanol to prepare a solution containing

0.5 mg per ml as the reference solution. Carry out the method for thin layer chromatography (Appendix Ⅵ B), using silica gel G mixed with sodium carboxymethylcellulose as the coating substance and a mixture of toluene, ethyl acetate, and formic acid (5∶4∶1) as the mobile phase. Apply separately 5 μl of each of the test solution and the reference solution to the plate. After developing and removing the plate, dry in air. Spray with 1% aluminium trichloride in ethanol, and examine under ultraviolet light at 365 nm. The fluorescent spot in the chromatography obtained with the test solution corresponds in position and colour to the spot in the chromatography obtained with the reference solution.

Other requirements Comply with the general requirements for granules (Appendix Ⅰ C).

Assay Carry out the method for high performance liquid chromatography (Appendix Ⅵ D).

Chromatographic system and system suitability Use octadecylsilane bonded silica gel as the stationary phase and a mixture of methanol and 0.1% solution of phosphoric acid (85∶15) as the mobile phase. As detector a spectrophotometer set at 254 nm. The number of theoretical plates of the column is not less than 2000, calculated with the reference to the peak of emodin.

Reference solution Weigh accurately a quantity of emodin CRS, dissolve in methanol to prepare a reference solution containing 10 μg per ml.

Test solution Pulverize the content, obtained under the test of weight variation, to fine powder. Weigh accurately 2 g of the granules or 0.5 g of granules without sucrose to a 50 ml stopper conical flask, add accurately 25 ml of methanol, stopper well, and weigh. Ultrasonicate (power, 250 W, frequency, 33 kHz) for 30 minutes, allow to cool, and weigh again. Replenish the lost weight with methanol, mix well, and filter. Measure accurately 10 ml of the successive filtrate to a round-bottom flask, recover methanol in vacuum, add 10 ml of 2.5 mol/L solution of sulfuric acid, and ultrasonicate for 5 minutes. Add 10 ml of chloroform, heat under reflux for 1 hour, allow to cool, transfer to a separating funnel, wash the container with a quantity of chloroform, combine the washings to the same separating funnel, separate the chloroform layer, extract the water layer with two 10-ml quantities of chloroform, and combine the chloroform solutions. Dehydrate with a quantity of anhydrous sodium sulfate, wash the container and the filter paper with a quantity of chloroform, combine the washings with the chloroform extracts, and recover chloroform in vacuum. Dissolve the residue in a quantity of methanol, transfer to a 10 ml volumetric flask, dilute to volume with methanol, mix well, and use the successive filtrate as the test solution.

Procedure Inject accurately 10 μl of each of the reference solution and the test solution into the column, and calculate the content.

It contains not less than 1.5 mg of emodin ($C_{15}H_{10}O_5$) per pack, referred to Radix et Rhizoma Polygoni Cuspidati.

Action To clear *heat* to relieve *toxicity*.

Indications Common cold due to affliction from external *wind-heat*, which transforms into *fire*, with manifestations of fever, swollen painful and dry throat, bitter taste in the mouth, coughing with expectoration of yellow sputum, brown urine and constipation; suppurative tonsillitis, acute pharyngitis, acute bronchitis or simple pneumonia with above symptoms.

Usage and dosage 1-2 sachet to be infused in boiling water for oral administration, 2-4 times a day, or follow doctor's advice.

Strength (1) 16 g per pack
(2) 4 g per pack (with out sucrose)

Storage Preserve in tightly closed containers.

Rujiling Keli (乳疾灵颗粒)

Rujiling Granules

Ingredients Radix Bupleuri; Rhizoma Cyperi (processed with vinegar); Pericarpium Citri Reticulatae Viride; Radix Paeoniae Rubra; Radix et Rhizoma Salviae Miltiorrhizae; Semen Vaccariae (stir-baked), Caulis Spatholobi; Concha Ostreae; Sargassum; Thallus Laminariae seu Eckloniae; Herba Epimedii; Semen Cuscutae.

Procedure Decoct Semen Vaccariae with water twice, 1.5 hours for the first time, 1 hour for the second time. Combine the decoctions, filter. Concentrate the filtrate to a solution with a relative density of 1.10 (70-80℃), cool to the room temperature. Add a quantity of ethanol, equivalent to the above solution, and produce precipitate. Filter, recover ethanol from the filtrate. Decoct the other eleven ingredients with water twice, 2 hours for the first time, 1.5 hours for the second time, combine the decoction, and filter. Concentrate the filtrate with the above decoction to a thick extract with relative density of 1.40 (50-60℃), add a quantity of sucrose and dextrin to make granules, and dry.

Description Brownish-yellow or dark brown granules. Taste, bitter and slightly sweet.

Identification (1) Pulverize 5 g to fine powder, add 20 ml of ethanol, ultrasonicate for 20 minutes, and filter. Evaporate the filtrate to dryness, dissolve the residue in 10 ml of water, then extract with three 15-ml quantities of *n*-butanol saturated with water, combine the *n*-butanol extractions, wash with water twice, each 10 ml. Separate the *n*-butanol extracts and concentrate to about 1 ml on a water bath, mix with a quantity of aluminium oxide, and dry on a water bath. Apply to a column pack with neutral aluminium oxide (200 mesh, 1 g, 1 cm internal diameter), elute with 50 ml of ethanol. Collect the eluate, evaporate to dryness, and dissolve the residue in 0.5 ml of methanol as the test reference solution. Dissolve paeoniflorin CRS in 1 ml of methanol to produce a solution containing 1 mg per ml as the reference solution. Carry out the method for thin layer chromatography (Appendix Ⅵ B), using silica gel G as the coating substance and a mixture of chloroform, ethyl acetate, methanol, and formic acid (40∶5∶10∶0.2) as the mobile phase. Apply separately 10 μl of each of the two solutions to the plate. After developing and removal of the plate, dry in air. Spray with 5% vanillin in sulfuric acid, and heat to the spots clear. The blueish-violet spot in the chromatogram obtained with the test solution corresponds in position and colour to the spot in the chromatogram obtained with the reference solution.

(2) Pulverize 10 g to fine powder, add 40 ml of methanol, ultrasonicate for 20 minutes, filter, and evaporate to dryness. Dissolve the residue in 20 ml of water, adjust pH value to 2 with dilute hydrochloric acid TS, and extract with two 20-ml quantities of ethyl acetate. Combine the extracts and evaporate to dryness, and dissolve the residue in 1 ml of methanol as the test solution. Dissolve a quantity of sodium danshensu CRS in methanol to prepare a reference solution containing 1 mg per ml. Carry out the method for thin layer chromatography (Appendix Ⅵ B), using silica gel GF_{254}

mixed with sodium carboxymethylcellulose as the coating substance and a mixture of chloroform, acetone, and formic acid (4:2:1) as the mobile phase. Apply separately 5 μl of each of the test solution and the reference solution to the plate. Develop in a chamber pre-equilibriated with formic acid vapour for 10 minutes, remove the plate, and dry in air. Expose the plate to ammonia vapour for 10 minutes, and examine under ultraviolet light at 365 nm. The fluorescent spot in the chromatography obtained with the test solution corresponds in position and colour to the spot in the chromatography obtained with the reference solution.

Other requirements Comply with the general requirements for granules (Appendix Ⅰ C).

Assay Carry out the method for high performance liquid chromatography (Appendix Ⅵ D).

Chromatographic system and system suitability Use octadecylsilane bonded silica gel as the stationary phase and the mixture of acetonitrile and 0.075 mol/L phosphoric acid (adjust pH value to 4.5 with triethylamine) (73:27) as the mobile phase. AS detector a spectrophotometer set at 270 nm. The number of theoretical plates of the column is not less than 4000, calculated with reference to the peak of icariin.

Reference solution Weigh accurately about 10 mg of icariine CRS, dried to constant at 105℃ previously, to a 100 ml volumetric flask, dissolve and dilute to volume with methanol, and mix well. Transfer accurately 1 ml to a 25 ml volumetric flask, dilute to volume with the mobile phase, and mix well, producing a solution containing 4 μg of icariine per ml as the reference solution.

Test solution Pulverize the mixed contents obtained under the test of weight variation to fine powder, weigh accurately 2 g to a stopper conical flask, add accurately 50 ml of 70% ethanol, stopper well, weigh and allow to stand overnight. Ultrasonicate (power, 250 W; frequency, 33 kHz) for 20 minutes, cool, and weigh again. Replenish the loss of weight with 70% ethanol, mix well and filter. Use the filtrate as the test solution.

Procedure Inject Accurately 20 μl of each of the reference solution and the test solution into the column, and determine the content.

It contains not less than 1.1 mg of icariine ($C_{33}H_{40}O_{15}$) per pack, referred to Herba Epimedii.

Action To soothe the liver and promote blood circulation, and expel *phlegm* and soften hard masses.

Indication Mammary nodules due to stagnation of *liver-qi* and accumulation of *phlegm* with manifestations of breast lumps or nodules in different size, soft or moderately hard in quality, or abdominal pain before the menstrual cycle; hyperplasia of the mammary gland with above symptoms.

Usage and dosage 1-2 sachet infused in boiling water for oral administration, 1-2 sachet, 3 times a day.

Precaution Contraindicated for pregnant women.

Strength 14 g per pack

Storage Preserve in tightly closed container.

Rukuaixiao Pian
(乳块消片)

Rukuaixiao Tablets

Ingredients Folium Citri Reticulatae 825 g; Radix et Rhizoma Salviae Miltiorrhizae 825 g; Spina Gleditsiae 550 g; Semen Vaccariae 550 g; Fructus Toosendan 550 g; Pheretima 550 g.

Procedure Decoct the above ingredients, except Pheretima and Semen Vaccariae, with water for twice, 1 hour for each, filter, combine the filtrate and concentrate to a thin extract with a relative density of 1.25-1.30 (85℃), and allow to cool. Heat under reflux Pheretima and Semen Vaccariae with 70% ethanol for twice, 2 hours and 1 hour for each respectively, filter, combine the filtrate, add to the above thin extract, adjust ethanol content to 70%, stir thoroughly, and stand. Recover ethanol, concentrate to a thick extract, and dry in vacuum, pulverize to powder, add a quantity of excipients, mix thoroughly, making granules and compress into 1000 tablets, coated with sugar or film.

Description Sugar or film coated tablets with brown core; taste, bitter.

Identification (1) Pulverize 10 tablets, removed the coats, add 20 ml of chloroform, ultrasonicate for about 20 minutes and filter. Evaporate the filtrate to 1 ml as the test solution. Prepare a solution of 1 g of Pheretima reference drug in the same manner as the reference drug solution. Carry out the method for thin layer chromatography (Appendix Ⅵ B), using silica gal G as the coating substance and a mixture of benzene and ethyl acetate (9:1) as the mobile phase. Apply separately 5 μl of each of the two solutions to the plate. After developing and removal of the plate, dry in air, and examine under ultraviolet at 365 nm. The fluorescent spots in the chromatogram obtained with the test solution correspond in position and colour to the spots in the chromatogram obtained with the reference drug solution.

(2) Pulverize 5 tablets, removed the coats, to fine powder, and dissolve in 20 ml of water by pulverizing. Centrifuge, and extract the supernatant with petroleum ether (60-90℃) for three times, 20 ml for the first and second times, and 15 ml for the third time. Discard the petroleum ether extracts. Extract the water with three 20-ml quantities of ethyl acetate, combine the ethyl acetate extracts, evaporate to dryness, and dissolve the residue in 1 ml of ethanol as the test solution. Decoct 3 g of Radix et Rhizoma Slaviae Miltiorrhizae reference drug with 60 ml of water for 1 hour, filter, concentrate the filtrate to about 10 ml, add ethanol to a content of 70%, filter, evaporate the filtrate to dryness, and dissolve the residue in 20 ml of water. Prepare a solution in the same manner as described under the preparation of test solution, start at "Extract the water with three 20-ml quantities of ethyl acetate", as the reference drug solution. Carry out the method for thin layer chromatography (Appendix Ⅵ B), using silica gel G as the coating substance and a mixture of chloroform, acetone, and formic acid (25:10:4) as the mobile phase. Apply separately 5 μl of each of the test solution and the reference drug solution to the plate. After developing and removing the plate, dry in air. Expose the plate to ammonia vapour, and spray with 5% ferric chloride in ethanol. The spots in the chromatography obtained with the test solution correspond in position and colour to the spots in the chromatography obtained with the reference drug solution.

(3) Pulverize 5 tablets, removed the coats, to fine powder, add 50 ml of 70% ethanol, and heat under reflux for 1 hour. Filter, evaporate the filtrate to dryness, and dissolve the residue in 30 ml of water. Extract by shaking with three 30-ml quantities of ether, and discard the ether extracts. Evaporate the ether in the water layer, apply the water to a column packed with polyamide (80-100 meshs, 2 g, 1 cm in diameter, packed with water), pre-elute with 100 ml water, elute again with 50 ml of 70% ethanol, collect the ethanol eluates, and evaporate to dryness. Dissolve the residue in 15 ml of water, extract with two 15-ml quantities of ethyl acetate, combine the ethyl acetate extracts, and evaporate to

dryness. Dissolve the residue in 1 ml of ethanol as the test solution. Decoct 3 g of Folium Citri Reticulatae reference drug with 60 ml of water for 1 hour, filter and concentrate the filtrate to about 10 ml, and add ethanol to a content of 70%. Filter and evaporate the filtrate to dryness, dissolve the residue in 30 ml of water, apply to a column packed with polyamide (80-100 meshs, 2 g, 1 cm in diameter, packed with water), pre-elute with 100 ml water, elute again with 50 ml of 70% ethanol, collect the ethanol eluates, and evaporate to dryness. Dissolve the residue in 1 ml of ethanol as the reference drug solution. Carry out the method for thin layer chromatography (Appendix Ⅵ B), using polyamide as the coating substance and a mixture of butanone, acetylacetone, ethanol, and water (4∶3∶3∶13) as the mobile phase. Apply separately 2 μl of each of the test solution and the reference drug solution to the membrane. After developing in a chamber pre-equilibriated with glacial acetic acid vapour, remove the membrane, and dry in air. Spray with 1% aluminium trichloride in ethanol, heat at 105℃ for 3 minutes, and examine under ultraviolet light at 365 nm. The fluorescent spots in the chromatography obtained with the test solution correspond in position and colour to the spots in the chromatography obtained with the reference drug solution.

Other requirements Comply with the general requirements for tablets (Appendix Ⅰ D).

Assay Carry out the method for high performance liquid chromatography (Appendix Ⅵ D).

Chromatographic system and system suitability Use octadecylsilane bonded silica gel as the stationary phase and a mixture of acetonitrile, methanol, water, and glacial acetic acid (0.5∶8∶92∶1) as the mobile phase. As detector a spectrophotometer set at 280 nm. The number of theoretical plates of the column is not less than 3500, calculated with the reference to the peak of danshensu.

Reference solution Weigh accurately a quantity of sodium danshensu CRS, and dissolve in 5% oxalic acid to produce a reference solution containing 48 μg per ml (correspond to 43 μg of danshensu per ml).

Test solution To 10 tablets, with coating removed, weigh accurately. Pulverize to fine powder, weigh accurately 0.3 g to a centrifugal tube, add 2 ml of water and 1.5 g of neutral aluminium oxide (100-200 meshs), and mix well. Wash with two 20-ml quantities of water, centrifuge, discard the washings, and extract by stirring with three 8-ml quantities of 5% oxalic acid. Centrifuge, combine the oxalic acid solution to a 25 ml volumetric flask, and dilute to volume with 5% oxalic acid. Mix well and filter, and use the successive filtrate as the test solution.

Procedure Inject accurately 10 μl of each of the reference solution and the test solution into the column, and calculate the content.

It contains not less than 0.8 mg of danshensu ($C_9H_{10}O_5$) per tablet, referred to Radix et Rhizoma Slaviae Miltiorrhizae.

Action To soften hard masses to disintegrate them, promote blood circulation to eliminate acute mastitis, and clear *heat* and remove toxic materials.

Indications Mammary nodules, acute mastitis at the initial stage due to accumulation of *phlegm* and *heat*, hyperplasia of the mammary gland and mastadenitis at the initial state with above symptoms.

Usage and dosage 4-6 tablets, 3 times a day.

Precaution Contraindicated for pregnant women.

Strength 0.36 g per film coated tablet

Storage Preserve in tightly closed containers.

Rupixiao Pian
(乳癖消片)

Rupixiao Tablets

Ingredients Cornu Cervi; Herba Taraxaci; Thallus Laminariae seu Eckloniae; Radix Trichosanthis; Caulis Spatholobi; Radix et Rhizoma Notoginseng; Radix Paeoniae Rubra; Sargassum; Radix Rhapontici; Radix Aucklandiae; Radix Scrophulariae; Cortex Moutan; Spica Prunellae; Fructus Forsythiae; Flos Carthami.

Procedure Pulverize Radix Scrophulariae, Radix et Rhizoma Notoginseng, Cornu Cervi to fine powder respectively. Decoct the other twelve ingredients with water for 2 times, 3 hours for the first time and 2 hours for the second. Combine the decoction, filter and concentrate to an appropriate amount. Mix thoroughly with the above fine powder and a quantity of excipients, make granules, dry, compress into 1000 tablets and coat with sugar or film; or compress into 500 tablets, coat with film.

Description Sugar or film coated tablets with dark brown to brownish-black core; odour, slight; taste, bitter and salty.

Identification (1) Microscopical: Stone cells yellowish-brown or colourless, subrectangular, subrounded or irregular, striation distinct, up to about 94 μm in diameter. Irregular pieces translucent, edge with relatively strong refractive light, surface with fine and short striations, small pits and fine fissures.

(2) Pulverize a quantity of film coated tablets or sugar coated tablets, removed coats for sugar coated tablets, into fine powder, weigh 2 g of the powder, add about 1 ml of water, shake well, and add 10 ml of *n*-butanol saturated with water, shake for about 10 minutes, stand for 2 hours, centrifuge. To the supernatant add three times of water saturated with *n*-butanol, shake well, stand for layer separating (centrifuge if necessary). Separate the *n*-butanol layer, evaporate to dryness. Dissolve the residue in 1 ml of methanol as the test solution. Dissolve ginsenoside Rb_1 CRS, ginsenoide Rg_1 CRS and notoginsenoside R_1 CRS in methanol to produce a mixture containing 1.5 mg of each per ml as the reference solution. Carry out the method for thin layer chromatography (Appendix Ⅵ B), using silica gel G as the coating substance, and the lower layer of a mixture of chloroform, methanol, and water (13∶7∶2), stand below 10℃, as the mobile phase. Apply separately 1-2 μl of each of the two solutions to the plate. After developing in a chamber pre-equilibrated with the mobile phase for 15 minutes and removal of the plate, dry in air. Spray with dilute sulfuric acid TS, heat at 100℃ to the spots clear. Examine in sunlight and under ultraviolet light at 365 nm. The spots or fluorescent spots in the chromatogram obtained with the test solution correspond in position and colour to the spots in the chromatogram obtained with the reference solution.

Other requirements Comply with the general requirements for tablets (Appendix Ⅰ D).

Action To soften hard masses and disintegrate them, promote blood circulation to reduce pain, and clear *heat* and remove toxic materials.

Indications Mammary glands, acute mastitis due to accumulation of *phlegm-heat* with manifestations of soft mammary lumps in different size and shape, or red and swollen mammary nodules; hyperplasia of the mammary

gland at the initial stage with above symptoms.

Usage and dosage 5-6 small tablets or 3 big tablets, 3 times a day.

Precaution Be cautious about pregnant women.

Strength (1) 0.34 g per film coated tablet
(2) 0.67 g per film coated tablet

Storage Preserve in tightly closed containers.

Ruyi Jinhuang San
(如意金黄散)

Ruyi Jinhuang Powder

Ingredients Rhizoma Curcumae Longae 160 g; Radix et Rhizoma Rhei 160 g; Cortex Phellodendri Chinensis 160 g; Rhizoma Atractylodis 64 g; Cortex Magnoliae Officinalis 64 g; Pericarpium Citri Reticulatae 64 g; Radix et Rhizoma Glycyrrhizae 64 g; Rhizoma Arisaematis 64 g; Radix Angelicae Dahuricae 160 g; Radix Trichosanthis 320 g.

Procedure Pulverize the above ten ingredients to fine powder, sift and mix thoroughly.

Description A yellow to golden-yellow powder; odour, slightly aromatic bitter and slightly sweet.

Identification (1) Microscopical: Clusters of calcium oxalate large, 60-140 μm in diameter. Prisms of calcium oxalate abundant in parenchyma. Needles of calcium oxalate fine, 10-32 μm long, irregularly filling in parenchymatous cells. Needles of calcium oxalate in bundles or scattered, up to about 90 μm long. Fibre bundles bright yellow, surrounded by cells containing prisms of calcium oxalate, forming crystal fibres, crystal cells with lignified and thickened walls. Fibre bundles surrounded by parenchymatous cells containing prisms of calcium oxalate, forming crystal fibres. Stone cells colourless, branched, with thickened and distinctly striated walls. Bordered pitted vessels large, mostly broken, some bordered pits hexagonal or rhombic, arranged closely.
(2) To 1 g, add 20 ml of methanol, ultrasonicate for 20 minutes, and filter. Evaporate the filtrate to dryness, dissolve the residue in 40 ml of water, add 4 ml of hydrochloric acid, heat on a water bath for 30 minutes, and cool immediately. Extract with two 20-ml quantities of ether, combine the ether extract, evaporate to dryness. Dissolve the residue in 2 ml of ethyl acetate as the test solution. Prepare a solution of 0.1 g of Radix et Rhizoma Rhei reference drug in the same manner as the reference drug solution. Carry out the method for thin layer chromatography (Appendix VI B), using silica gel G as the coating substance and the upper layer of a mixture of petroleum ether (30-60℃), ethyl formate, and formic acid (15∶5∶1) as the mobile phase. Apply separately 1-2 μl of each of the two solutions to the plate. After developing and removal of the plate, dry in air. Examine under ultraviolet light at 365 nm, the five orange-yellow fluorescent spots in the chromatogram obtained with the test solution correspond in position and colour to the spots in the chromatogram obtained with the reference drug solution. Expose to ammonia vapour, examine in sunlight, the colour of the spots turns red.
(3) Apply 3 g of the powder to a previously prepared small column packed with neutral aluminium oxide (120-mesh, 5 g, 1.5 cm in diameter), elute with 30 ml of dehydrated ethanol. Collect the eluate, evaporate to dryness, dissolve the residue in 2 ml of ethanol, filter, and use the filtrate as the test solution. To 0.1 g of Cortex Phellodendri Chinensis reference drug add 5 ml of methanol, ultrasonicate for 15 minutes, and filter. Concentrate the filtrate to about 1 ml as the reference drug solution. Dissolve berberine hydrochloride CRS and palmatine hydrochloride CRS in methanol to prepare a mixture containing 0.5 mg of each per ml as the reference solution. Carry out the method for thin layer chromatography (Appendix VI B), using silica gel G mixed with sodium carboxymethylcellulose as the coating substance and a mixture of benzene, ethyl acetate, methanol, isopropanol, and concentrated ammonia TS (12∶6∶3∶3∶1) as the mobile phase. Apply separately 1 μl of each of the three solutions to the plate. Develop in a chamber pre-equilibriated with the mobile phase for 15 minutes. Remove the plate, and dry in air. The fluorescent spots in the chromatogram obtained with the test solution correspond in position and colour to the spots in the chromatogram obtained with the reference solution, and the major fluorescent spots in the chromatogram obtained with the test solution correspond in position and colour to the spots in the chromatogram obtained with the reference drug solution.
(4) To 10 g of the powder add 40 ml of methanol, ultrasonicate for 15 minutes, and filter. Evaporate the filtrate to dryness, dissolve the residue in 40 ml of dilute hydrochloric acid TS, extract with three 20-ml quantities of chloroform. Combine the chloroform extracts, extract with three 20-ml quantities of 2% solution of sodium hydroxide. Combine the sodium hydroxide extracts, adjust pH to 1-2 with dilute hydrochloric acid TS. Extract under shaking with three 20-ml quantities of chloroform. Combine the chloroform extracts, wash with 20 ml of water, dehydrate the chloroform liquid with anhydrous sodium sulphate, evaporate to dryness, and dissolve the residue in 2 ml of methanol as the test solution. Dissolve magnolol CRS and honokiol CRS in methanol to produce a mixture containing 1 mg of each per ml as the reference solution. Carry out the method for thin layer chromatography (Appendix VI B), using silica gel G as the coating substance and a mixture of benzene and methanol (27∶1) as the mobile phase. Apply separately 10 μl of the test solution and 5 μl of the reference solution to the plate. After developing and removal of the plate, dry in air. Spray with a 5% vanillin in sulfuric acid and heat to the spots clear. The spots in the chromatogram obtained with the test solution correspond in position and colour to the spots in the chromatogram obtained with the reference solution.
(5) To 10 g of the powder add 30 ml of chloroform and 2 ml of hydrochloric acid, heat under reflux for 1 hour, cool, and filter. Evaporate the filtrate to dryness, and dissolve the residue in 1 ml of ethanol as the test solution. Dissolve glycyrrhetinic acid CRS in dehydrated ethanol to produce a solution containing 1 mg per ml as the reference solution. Carry out the method for thin layer chromatography (Appendix VI B), using silica gel G as the coating substance and a mixture of petroleum ether (30-60℃), benzene, ethyl acetate, and glacial acetic acid (20∶40∶14∶1) as the mobile phase. Apply separately 1 μl of each of the two solutions to the plate. After developing and removal of the plate, dry in air. Spray with 10% phosphomolybdic acid in ethanol and heat at 105℃ for 5 minutes. The spot in the chromatogram obtained with the test solution corresponds in position and colour to the spot in the chromatogram obtained with the reference solution.
(6) To 5 g of the powder add 20 ml of petroleum ether (60-90℃), ultrasonicate for 30 minutes, and filter. Evaporate the filtrate to dryness, dissolve the residue in 1 ml of ethyl acetate as the test solution. Prepare a solution of 1 g of Radix Angelicae Dahuricae reference drug and 10 ml of petroleum ether (60-90℃) in the same manner as the reference drug solution. Dissolve imperatorin CRS and isoimperatorin CRS in ethyl acetate to produce a mixture

containing 1 mg of each per ml as the reference solution. Carry out the method for thin layer chromatography (Appendix Ⅵ B), using silica gel H mixed with sodium carboxymethylcellulose as the coating substance and a mixture of petroleum ether (30-60℃) and ether (3∶2) as the mobile phase. Apply separately 5 μl of the test solution and 2 μl of each of the reference drug solution and the reference solution to the plate. After developing and removal of the plate, dry in air. Examine under ultraviolet light at 365 nm. The major fluorescent spots in the chromatogram obtained with the test solution correspond in position and colour to the spots in the chromatogram obtained with the reference drug solution, and the fluorescent spots in the chromatogram obtained with the test solution correspond in position and colour to the spots in the chromatogram obtained with the reference solution.

Other requirements Comply with the general requirements for powders (Appendix Ⅰ B).

Assay Carry out the method for high performance liquid chromatography (Appendix Ⅵ D).

Chromatographic system and system suitability Use octadecylsilane bonded silica gel as the stationary phase and a mixture of isopropanol, methanol, and 0.5% solution of acetic acid (25∶19∶56) as the mobile phase. As detector a spectrophotometer set at 430 nm. The number of theoretical plates of the column is not less than 4000, calculated with the reference to the peak of curcumin.

Reference solution Weigh accurately a quantity of curcumin CRS, dissolve in methanol to produce a reference solution containing 40 μg per ml.

Test solution Measure accurately 0.25 g of the powder to a stopper conical flask, add accurately 10 ml of methanol, stopper well, and weigh, Allow to stand for 1 hour, weigh again, replenish the lost weight with methanol, centrifuge, and use the supernatant as the test solution.

Procedure Inject accurately 10 μl of each of the reference solution and the test solution into the column, respectively, and calculate the content.

It contains not less than 1.0 mg of curcumin ($C_{21}H_{20}O_6$) per tablet, referred to Rhizoma Curcumae Longae.

Action To clear *heat* and toxic materials, and to reduce swelling to kill pain.

Indications Swollen and painful pyogenic skin infection, or erysipelas and metastatic abscesses due to *heat* retained in the skin, with manifestations of red, swollen, hot and painful skin, also used for traumatic injuries.

Usage and dosage Applied externally after mixing with tea for one of the symptoms of redness, swelling, hotness and pain; or mixing with vinegar, green onion and wine, or vegetable oil and honey for only swelling without suppuration, several times a day.

Precaution For external use, not for per os.

Storage Preserve in well closed containers.

Sanbao Jiaonang
(三宝胶囊)

Sanbao Capsules

Ingredients Radix et Rhizome Ginseng 20 g; Cornu Cervi Pantotrichum 20 g; Radix Angelicae Sinensis 40 g; Rhizoma Dioscoreae 60 g; Carapax et Plastrum Testudinis (stir-baked with vinegar) 20 g; Fructus Amomi (stir-baked) 10 g; Fructus Corni 20 g; Ganoderma 20 g; Radix Rehmanniae praeparata 60 g; Radix et Rhizoma Salviae Miltiorrhiae 100 g; Fructus Schisandrae Chinensis 20 g; Semen Cuscutae (stir-baked) 30 g; Herba Cistanches 30 g; Radix Polygoni Multiflori 40 g; Flos Chrysanthemi 20 g; Cortex Moutan 20 g; Radix Paeoniae Rubra 20 g; Cortex Eucommiae 40 g; Raidix Ophiopogonis 10 g; Rhizoma Alismatis 20 g; Raidix Scrophulariae 20 g.

Procedure Pulverize Radix et Rhizoma Ginseng, Cornu Cervi Pantotrichum, Rhizoma Dioscoreae, Carapax et Plastrum Testudinis, Radix Angelicae Sinensis, Fructus Amomi and Fructus Corni to fine powder, sift, and mix well. Decoct the other fourteen ingredients with water two times, each for 1.5 hours, combine the decoctions, filter, and concentrate the filtrates to a thin extract with a relative density of 1.20-1.25 (85℃). Add the above fine powder, mix well, dry below 60℃, pulverize to fine powder, and make to 1000 capsules.

Description Hard capsules with dark brown powder; odour, slight; taste, slightly sour and sweet.

Identification (1) Microscopical: Sclerenchymatous cells of endotesta yellowish-brown or reddish-brown, polygonal in surface view, thick-walled, lumen containing silica bodies. Irregular pieces grayish-yellow, with fine striations or splits on the surface. Starch granules triangular ovoid or rectangular rounded, 24-40 μm in diameter, hilum short-cleft or V-shaped. Epidermal cells of pericarp orange-yellow, subpolygonal in surface view, anticlinal walls beaded.

(2) Apply 5 g of the content into a Soxhlet's extractor, extract with 80 ml of ether under reflux until the extract colourless, and collect the ether extracts for later use. Extract the residue, expelled ether, with 60 ml of *n*-butanol saturated with water under reflux for 30 minutes, and filter. Wash the filtrate with three 15-ml quantities of 0.1% solution of sodium hydroxide saturated with *n*-butanol, and then wash with two 20-ml of water saturated with *n*-butanol. Evaporate the *n*-butanol solution to dryness and dissolve the residue in 1 ml of methanol as the test solution. Dissolve ginsenoside Re CRS, ginsenoside Rg_1 CRS and ginsenoside Rb_1 CRS in methanol respectively to produce solutions each containing 1 mg pre ml as the reference solutions. Carry out the method for thin layer chromatography (Appendix Ⅵ B), using silica gel G as the coating substance and the lower layer of a mixture of chloroform, methanol and water (13∶7∶2), standing below 10℃, as the mobile phase. Apply separately 5 μl of the test solution and 3 μl of each of the reference solutions to the plate. After developing and removal of the plate, spray with 10% sulfuric acid in ethanol, heat at 100℃ to the spots clear. The spots in the chromatogram obtained with the test solution correspond in position and colour to the spots in the chromatograms obtained with the reference solutions. Examine under ultraviolet light at 365 nm, the fluorescent spots in chromatogram obtained with the test solution correspond in position and colour to the fluorescent spots in the chromatograms obtained with the reference solutions.

(3) Take one third volume of the ether extract obtained under Identification (2), evaporate at a lower temperature to dryness, and dissolve the residue in 1 ml of ethanol as the test solution. Ultrasonicate 0.5 g of Radix Angelicae Sinensis reference drug with 20 ml of ethanol for 20 minutes, filter, concentrate the filtrate to dryness, and dissolve the residue in 5 ml of ethanol as the reference drug solution. Carry out the method for thin layer chromatography (Appendix Ⅵ B), using silica gel G as the coating substance and a mixture of hexane and ethyl acetate (9∶1) as the mobile phase. Apply separately to the plate 10 μl of the test solution and 1 μl of the reference drug solution. After developing and removal of the plate, dry in air. Examine

under ultraviolet light at 365 nm. The fluorescent spots in chromatogram obtained with the test solution correspond in position and colour to the fluorescent spots in the chromatogram obtained with the reference drug solution.

(4) Take one third volume of the ether extract obtained under Identification (2), evaporate at a lower temperature to dryness, dissolve the residue in 1 ml of a mixture of dehydrated ethanol and chloroform (3 : 2) as the test solution. Dissolve ursolic acid CRS in dehydrated ethanol to prepare a solution containing 0.5 mg per ml as the reference solution. Carry out the method for thin layer chromatography (Appendix Ⅵ B), using silica gel G as the coating substance and a mixture of cyclohexane, chloroform, ethyl acetate and glacial acetic acid (20 : 5 : 8 : 0.5) as the mobile phase. Apply separately 10 μl of the test solution and 2 μl of the reference solution to the plate. After developing and removal of the plate, spray with 10% sulfuric acid in ethanol, heat at 100℃ to the spots clear. The spot in chromatogram obtained with the test solution corresponds in position and colour to the spot in the chromatograms obtained with the reference solutions

(5) Ultrasonicate 2 g of the content with 15 ml of methanol for 20 minutes, filter, evaporate the filtrate to dryness, heat the residue in 10 ml of water and 1 ml of hydrochloric acid on a boiling water bath for 30 minutes, and cool immediately. Extract the acidic solution by shaking with four 10-ml quantities of ether, combine the ether extracts, evaporate at a lower temperature, and dissolve the residue in 1 ml of ethyl acetate as the test solution. Dissolve emodin CRS in ethyl acetate to prepare a solution containing 0.25 mg per ml as the reference solution. Carry out the method for thin layer chromatography (Appendix Ⅵ B), using silica gel G as the coating substance and a mixture of petroleum ether (30-60℃), ethyl formate and formic acid (15 : 5 : 1) as the mobile phase. Apply separately 10 μl of the test solution and 1 μl of the reference solution to the plate. After developing and removal of the plate, dry in air. The spot in chromatogram obtained with the test solution corresponds in position and colour to the spot in the chromatograms obtained with the reference solution. The spots turn red on exposing to ammonia vapour.

Other requirements Comply with the general requirements for capsules (Appendix Ⅰ L).

Assay Carry out the method for high performance liquid chromatography (Appendix Ⅵ D).

Chromatographic system and system suitability Use octadecylsilane bonded silica gel as the stationary phase and a mixture of methanol and 1% acetic acid (12 : 88) as the mobile phase. As detector a spectrophotometer set at 279 nm. The number of theoretical plates of the column is not less than 2000, calculated with the reference to the peak of protocatechuic aldehyde.

Reference solution Dissolve a quantity of protocatechuic aldehyde CRS, accurately weighed, in methanol to prepare a solution containing 12 μg per ml as the reference solution.

Test solution Take the content of 20 capsules, weighed accurately, grind well, weigh accurately 2 g in a stopper conical flask, add accurately 50 ml of methanol, stopper tightly and weigh. Heat under reflux for 1 hour, cool, weigh again, replenish the loss of weight with methanol, shake well and filter. Measure accurately 25 ml of the successive filtrate and evaporate to dryness. Dissolve the residue in 10 ml of water and adjust pH to 2 with dilute hydrochloric acid TS, extract with four 10-ml quantities of ether, combine the ether extracts, expel the ether and dissolve the residue in methanol, transfer to a 10 ml volumetric flask, add methanol to volume, shake well, filter and use the successive filtrate as the test solution.

Procedure Inject accurately 10 μl of each of the reference solution and the test solution into the column, respectively, and calculate the content.

It contains not less than 22 μg of protocatechuic aldehyde ($C_7H_6O_3$) per capsule. referred to Radix et Rhizoma Salviae Miltiorrhizae.

Action To replenish *kidney-essence* and nourish the *heart* to anchor the mind.

Indications Aching of the lower back and weakness of legs, impotence, seminal emission, dizziness, blurred vision, tinnitus, poor hearing, palpitation, insomnia and loss of appitite due to a deficiency of *kidndy-essence and heart-blood*.

Usage and dosage 3-5 capsules, twice a day.

Strength 0.3 g per capsule

Storage Preserve in tightly closed containers.

Sangju Ganmao Pian (桑菊感冒片)

Sangju Ganmao Tablets

Ingredients Folium Mori 465 g; Flos Chrysanthemi 185 g; Fructus Forsythiae 280 g; Oleum Menthae Dementholatum 1 ml; Semen Armeniacae Amarum 370 g; Radix Platycodonis 370 g; Radux et Rhizoma Glycyrrhizae 150 g; Rhizoma Phragmitis 370 g.

Procedure Pulverize Radix Platycodonis to fine powder, sift. Fructus Forsythiae distil volatile oil, decoct the drug residue of distillation, Folium Mori, Flos Chrysanthemi, Semen Armeniacae Amarum, Radux et Rhizoma Glycyrrhizae and Rhizoma Phragmitis with water twice (Semen Armeniacae Amarum After press to make oil, and put into at a temperature of 100℃), 2 hours for each time, combine the decoction, filter and concentrate the filtrate to a thick extract. Stir thoroughly with the fine powder of Radix Platycodonis and a quantity of excipient, make granules and dry, After cooling, spray the Oleum Menthae Dementholatum, mix thoroughly and compress into 1000 tablets or coat with sugar.

Description Tablets with pale-brown to dark-brown colour, or sugar coated tablets with pale-brown to dark-brown colour core; odour, slightly aromatic; taste, slightly bitter.

Identification (1) Pulverize 5 tablets or sugar coated tablets, removed the sugar coats, to fine powder, add 20 ml of methanol, ultrasonicate for 30 minutes, filter. Evaporate the filtrate to dryness. dissolved the residue in 20 ml of water, extract with two 20-ml quantities of *n*-butanol saturated with water, combine the *n*-butanol extracts, wash with 20-ml of water saturated with *n*-butanol, separate the *n*-butanol layer and evaporate to dryness, dissolve the residue in 1 ml of methanol as the test solution. Dissolve forsythin CRS in methanol to produce a solution containing 1 mg per ml as the reference solution. Carry out the method for thin layer chromatography (Appendix Ⅵ B), using silica gel G as the coating substance, and a mixture of chloroform, methanol and formic acid (9 : 1 : 0.1) as the mobile phase. Apply separately 5 μl of each of the reference solution and the test solution to the plate. After developing and removal of the plate, dry in air. Spray with 10% sulfuric acid in ethanol, heat at 105℃ to the spots clear. The spot in the chromatogram obtained with the test solution corresponds in position and colour to the spot in the chromatogram obtained

with the reference drug solution and the reference solution.
(2) Heat under reflux 7 tablets or sugar coated tablets, removed the sugar coats, ground to fine powder, on a water bath, in 30 ml of the mixture of chloroform, water and hydrochloric acid (10 : 10 : 3) for 1 hour. Separate the chloroform layer and evaporate to dryness, dissolve the residue in 1 ml of methanol as the test solution. Prepare a solution of 2 g of Radix Platycodonis reference drug in the same manner as the reference drug solution. Carry out the method for thin layer chromatography (Appendix VI B), using silica gel G mixed with sodium carboxymethyl cellulose as the coating substance, and the lower layer of a mixture of chloroform and methanol (20 : 1) as the mobile phase. Apply separately 10 μl of the reference drug solution and 10-20 μl of the test solution to the plate. After developing and removal of the plate, dry in air. Spray with 10% sulfuric acid in ethanol and heat at 105℃ to the spots clear. The spot in the chromatogram obtained with the test solution corresponds in position and colour to the spot in the chromatogram obtained with the reference drug solution.
(3) Heat under reflux 1 g of Radix et Rhizoma Glycyrrhizae reference drug, in 20 ml of ethanol for 30 minutes, cool and filter, evaporate the filtrate, dissolved the residue in 1 ml of ethanol as the reference drug solution. Carry out the method for thin layer chromatography (Appendix VI B), using silica gel G mixed with 1% solution of sodium hydroxide as the coating substance, and a mixture of ethyl acetate, formic acid, glacial acetic acid, and water (15 : 1 : 1 : 2) as the mobile phase. Apply separately 5 μl of each of the reference drug solution and the test solution obtained under Identification (1). After developing and removal of the plate, dry in air. Spray with 10% sulfuric acid in ethanol and heat at 105℃ to the spots clear. The spots in the chromatogram obtained with the test solution correspond in position and colour to the spots in the chromatogram obtained with the reference drug solution.

Other requirements Comply with the general requirements for tablets (Appendix I D).

Assay Carry out the method for high performance liquid chromatography (Appendix VI D)

Chromatographic system and system suitability Use Octadecylsilane bonded silica gel as the stationary phase and a mixture of acetonitrile and water (25 : 75) as the mobile phase. As detector a spectrophotometer set at 230 nm. The number of theoretical plates of the column is not less than 3000, calculated with the reference to the peak of forsythin.

Reference solution Dissolve a quantity of forsythin CRS, accurately weighed, in methanol to produce a solution containing 40 μg per ml.

Test solution Weigh accurately 20 tablets or sugar coated tablets, removed sugar coats, pulverize to fine powder. Weigh accurately 2 g of the powder in a stopper conical flask, add accurately 25 ml of methanol, weigh and ultrasonicate (power, 250 W; frequency, 50 kHz) for 30 minutes, allow to cool, weigh again, replenish the lost weight with methanol, mix well and filter. Exactly measure 5 ml of the successive filtrate, evaporate to dryness, dissolve the residue in 20 ml of water, extract with five 20-ml quantities of chloroform, combine the chloroform extracts, evaporate to dryness, dissolve in 50% methanol to a 5 ml volumetric flask and dilute with 50% methanol to the volume, shake well. Centrifuge or filter, use the supernatart or successive filtrate as the test solution.

Procedure Inject accurately 10 μl of each of the reference solution and the test solution into the column, calculate the content.
It contains not less than 0.10 mg of forsythin ($C_{29}H_{36}O_{15}$) per tablet, referred to Fructus Forsythiae.

Action To disperse *wind* and clear *heat*, and disseminate *lung-qi* to relieve coughing.

Indications Common cold at the initial stage due to *wind-heat* with manifestations of headache, coughing, dry mouth and sore throat.

Usage and dosage 4-8 tablets, 2-3 times a day.

Storage Preserve in tightly closed containers.

Sanhuang Pian
(三黄片)
Sanhuang Tablets

Ingredients Radix et Rhizoma Rhei 300 g; Berberine Hydrochloride 5 g; Extractum Scutellariae 21 g (equivalent to 15 g of Baicalin).

Procedure Decoct Radix Scutellariae with water for 3 times, 1.5 hours for the first time, 1 hour for the second time and 40 minutes for the third time respectively, combine the decoctions and filter. Adjust the filtrate to pH 1-2 with hydrochloric acid, allow to stand for 1 hour. Wash the precipitate with water to pH 5-7, heat to dryness and pulverize to fine powder, and determine the content of Baicalin. Pulverize 150 g of Radix et Rhizoma Rhei to fine powder and sift. Heat under reflux the rest of Radix et Rhizoma Rhei, in coarse powder, with 30% ethanol for 3 times, filter, combine the filtrate, recover ethanol and concentrate on vacuum to a thick extract. Add the fine powders of Radix et Rhizoma Rhei, berberine hydrochloride, Extractum Scutellariae and a quantity of excipient, mix thoroughly, make granules, dry, and compress into 1000 tablets and coat with sugar or film.

Description Sugar coated or film coated tablets with brown core; taste, bitter and slightly astringent.

Identification (1) Microscopical: Clusters of calcium oxalate large, 60-140 μm in diameter.
(2) Heat under reflux 5 tablets, removed the coats and finely powdered, with 30 ml of methanol for 30 minutes, allow it to cool, filter, and use the filtrate as the test solution. Dissolve berberine hydrochloride CRS in methanol to produce a solution containing 0.2 mg per ml as the reference solution. Carry out the method for thin layer chromatography (Appendix VI B), using silica gel G as the coating substance and a mixture of ethyl acetate, butanone, formic acid and water (10 : 7 : 1 : 1) as the mobile phase. Apply separately 2 μl of each of the test solution and the reference solution to the plate. After developing and removal of the plate, dry in air, examine under ultraviolet light at 365 nm. The yellow fluorescent spot in the chromatogram obtained with the test solution corresponds in position and colour to the spot in the chromatogram obtained with the reference solution.
(3) Evaporate 5 ml of the test solution, obtained under Identification (2), to dryness, dissolve the residue by stirring with 15 ml of water, filter, adjust pH to 1-2 with diluted hydrochloric acid TS. Extract with two 10-ml quantities of ethyl acetate, combine the extract, filter, and evaporate to dryness. Dissolve the residue in 1 ml of methanol as the test solution. Dissolve baicalin CRS in methanol to produce a solution mixed with 1 mg per ml as the reference solution. Carry out the method for thin layer chromatography (Appendix VI B), using silica gel G mixed with sodium carboxymethylcellulose as the coating substance and a mixture of ethyl acetate, butanone, formic acid, and

water (5:3:1:1) as the mobile phase. Apply separately 5 μl of each of the test solution and the reference solution to the plate. After developing and removal of the plate, dry in air. Spray with 2% solution of ferric chloride in ethanol. The spot in the chromatogram obtained with the test solution corresponds position and colour to the spot in the chromatogram obtained with the reference solution.

(4) Evaporate 5 ml of the test solution, obtained under Identification (2), to dryness, dissolve the residue in 10 ml of water, add 1 ml of hydrochloric acid, heat on a water bath for 30 minutes, cool immediately. Extract with two 10-ml quantities of ether, combine the ether extract, and expel the solvent to dryness. Dissolve the residue in 1 ml of ethyl acetate as the test solution. Prepare a solution with 1 g of Radix et Rhizoma Rhei reference drug in the same manner as the reference drug solution. Dissolve chrysophanol CRS and emodin CRS in methanol to produce a mixture containing 0.5 mg of each per ml as the reference solution. Carry out the method for thin layer chromatography (Appendix Ⅵ B), using silica gel G mixed with sodium carboxymethylcellulose as the coating substance and the upper layer of a mixture of petroleum ether (30-60℃), ethyl formate and formic acid (15:5:1) as the mobile phase. Apply separately 5 μl each of the test solution, the reference solution and the reference drug solution to the plate. After developing and removal of the plate, dry in air, examine under ultraviolet light at 365 nm. The orange-yellow fluorescent spots in the chromatogram obtained with the test solution correspond in position and colour to the spots in the chromatogram obtained with the reference drug and the reference solution. Expose the plate to ammonia vapour, examine in sunlight, the spots turn to red colour.

Rhaponticin Examine the chromatogram of the test solution, obtained under Identification (2), under ultraviolet light at 365 nm, no persistent bright bluish-purple fluorescent spot is shown in front of the spot corresponding to berberine hydrochloride.

Other requirements Comply with the general requirements for tablets (Appendix Ⅰ D).

Assay Carry out the method for high performance liquid chromatography (Appendix Ⅵ D).

Chromatographic system and system suitability Use octadecylsilane bonded silica gel as the stationary phase and a mixture of methanol and 0.1% phosphoric acid (85:15) as the mobile phase. As detector a spectrophotometer set at 254 nm. The number of the theoretical plates of the column is not less than 2000, calculated with reference to the peak of emodin.

Reference solution Dissolve a quantity of emodin CRS and chrysophanol CRS, accurately weighed, in a mixture of dehydrated ethanol and ethyl acetate (2:1) to produce a solution containing 10 μg emodin and 25 μg of chrysophanol per ml as the reference solution.

Test solution Weigh accurately 20 tablets, removed the coats, and pulverize to fine powder and sift (through No. 3 sieve). Weigh accurately a quantity of the powder (equivalent to the weight of 1 tablet) in a conical flask, add accurately 25 ml of ethanol, stopper closely and weigh. Heat under reflux on a water bath for 1 hour, allow it to cool, replenish the lost weight with ethanol, filter, and discard the initial filtrate. Transfer accurately 10 ml of the successive filtrate to a flask, evaporate to dryness on a water bath. Heat and hydrolyze the residue with 15 ml of a mixture of 30% ethanol and hydrochloric acid (10:1) on a water bath for 1 hour, cool immediately, extract with four 15-ml quantities of chloroform, combine the chloroform extract, evaporate to dryness on a water bath. Dissolve the residue in a mixture of dehydrated ethanol and ethyl acetate (2:1), transfer to a 25 ml volumetric flask, dilute to volume, mix well, filter. Discard the initial filtrate; use the successive filtrate as the test solution.

Procedure Inject accurately 10 μl of each of the reference solution and the test solution, into the column, and calculate the content.

It contains not less than 1.55 mg of total amount of emodin ($C_{15}H_{10}O_5$) and chrysophanol ($C_{15}H_{10}O_5$) per tablet, referred to Radix et Rhizoma Rhei.

Action To clear *heat* and *toxicity*, and purge *fire* and relax bowels.

Indications Swollen bloodshot eyes with pain, or oronasal sores, or sore throat, or swollen painful gums, irritability, thirst, deep-coloured urine and constipation due to abundant *heat* in the *triple energizer*; acute gastroenteritis and dysentery with above symptoms.

Usage and dosage 4 tablets, twice a day; appropriate reduction of dosage for children.

Precaution Be cautious about pregnant women.

Storage Preserve in tightly closed containers.

Sanjin Pian
(三金片)

Sanjin Tablets

Ingredients Radix Rosae Laevigatae; Rhizoma Smilacis Chinensis; Radix Melastomae Normalis; Herba Lygodii; Herba Centellae

Procedure Decoct the five ingredients with water for 2 times, 2 hours for the first time, and 1 hour for the second. Combine the decoctions, filter and concentrate to a thin extract with a relative density of 1.15-1.20 (50-60℃). Dry, add a quantity of adjuvant, mix thoroughly, make granules, compress into 1000 tablets (small tablet) or 600 tablets (big tablet), and coat with sugar or film.

Description Film coated or sugar coated tablets with blackish-brown colour core; taste, sour, astringent and slightly bitter.

Identification (1) Pulverize 15 tablets (small tablet) or 10 tablets (big tablet) with coating removed, add 15 ml of ethanol, ultrasonicate for 20 minutes, filter and evaporate to dryness. Dissolve the residue in 20 ml of solution of 0.01 mol/L sodium hydroxide, heat gently, extract with 10 ml of ether, discard the ether, extract the aqueous layer with 10 ml of ethyl acetate and evaporate to about 1 ml as the test solution. Prepare a solution of 2.5 g of Radix Rosae Laevigatae reference drug in the same manner as the reference drug solution. Carry out the method for thin layer chromatography (Appendix Ⅵ B), using silica gel G as the coating substances and a mixture of chloroform and methanol (17:3) as the mobile phase. Apply 10 μl of each of the above two solutions to the plate. After developing and removal of the plate, dry in air. Spray with 10% sulfuric acid in ethanol, heat to the spots clear. The main spots in the chromatogram obtained with the test solution correspond in position and colour to that in the chromatogram obtained with the reference drug solution.

(2) Extract the aqueous layer, extracted in the test of Identification (1) with ethyl acetate, with 15 ml of *n*-butanol saturated with water, separate *n*-butanol layer and wash with 5 ml of water saturated with *n*-butanol. Discard the washing, evaporate the *n*-butanol solution to dryness,

and dissolve the residue with 1 ml of methanol as the test solution. Dissolve asiaticoside CRS in methanol to produce a solution containing 1 mg per ml as the reference solution. Carry out the method for thin layer chromatography (Appendix Ⅵ B), using silica gel G as the coating substances and a mixture of chloroform, methanol and water (7∶3∶0.5) as the mobile phase. Apply 10 μl of each of the above two solutions to the plate. After developing and removal of the plate, dry in air. Spray with 10% sulfuric acid in ethanol, heat to the spots clear. The spot in the chromatogram obtained with the test solution corresponds in position and colour to the spot in the chromatogram obtained with the reference solution.

Other requirements Comply with the general requirements for tablets (Appendix Ⅰ D).

Assay Carry out the method for high performance liquid chromatography (Appendix Ⅵ D).

Chromatographic system and system suitability Use octadecylsilane bonded silica gel as the stationary phase, and a mixture of methanol and water (48∶52) as the mobile phase. Use an evaporate light scatter detector. The number of theoretical plates of the column is not less than 2000, calculated with the reference to the peak of madecassoside.

Reference solution Weigh accurately a quantity of madecassoside CRS, dissolve in methanol to produce two solutions containing 0.2 mg per ml and 0.6 mg per ml separately.

Test solution Triturate 30 tablets for small tablet or 20 tablets for big tablet, removed the coats, to fine powder. Weigh accurately 1.5 g of the powder in a stopper conical flask, add accurately 50 ml of methanol, closely stopper and weigh. Ultrasonicate for 30 minutes (power, 250 W; frequency, 40 kHz), cool, weigh again, replenish the lost weight with methanol, mix well and filter. Measure accurately 25 ml of the solution, evaporate on a water bath to dryness, dissolve the residue in 20 ml of water, and extract with three 15-ml quantities of *n*-butanol saturated with water. Wash the *n*-butanol solution with two 15-ml quantities of ammonia TS. Evaporate the *n*-butanol extracts to dryness, and dissolve the residue in ethanol and transfer to a 5 ml volumetric flask, add methanol to volume, mix well as the test solution.

Procedure Inject accurately 10 μl of each of the reference solutions and 5-10 μl of the test solution into the column respectively and calculate the content, using a calibration equation of logarithm alteration of two external standards.
It contains not less than 0.22 mg of madecassoside ($C_{48}H_{78}O_{20}$) per small tablet, and 0.35 mg per big tablet, referred to Herba Centellae.

Action To clear *heat-toxicity*, drain *dampness* to relieve stranguria, and reinforce the kidney.

Indications Stranguria due to *damp-heat* in the *lower-energizer* with manifestations of concentrated urine, dribble of urine with pain and frequency and urgency of urination; acute or chronic pyelonephritis, cystitis and urinary tract infection with above symptoms.

Usage and dosage 5 small tablets or 3 large tablets, 3-4 times a day.

Strength (1) Equivalent to 2.1 g of crude drug per small tablet
(2) Equivalent to 3.5 g of crude drug per large tablet

Storage Preverse in tightly closed containers.

Sanliangban Yaojiu
(三两半药酒)

Sanliangban Wine

Ingredients Radix Angelicae Sinensis 100 g; Radix Astragali Praeparata Cum Melle 100 g; Radix Achyranthis Bidentatae 100 g; Radix Saposhnikoviae 50 g.

Procedure Pulverize the above 4 ingredients to coarse powder, carry out the method for percolation descried under liquid extracts and extracts (Appendix Ⅰ O), using a mixture of 2400 ml of white wine and 8000 ml of yellow rice wine as the solvent to macerate for 48 hours and then slowly to take percolating. Add 840 g of sucrose in the percolate, stir to dissolve, allow to stand and filter.

Description A clear, yellowish-brown liquid; odour, aromatic; taste, slightly sweet and pungent.

Identification (1) To 50 ml add 2 ml of hydrochloric acid, heat under reflux for 1 hour. Extract with two 20-ml quantities of petroleum ether (60-90℃) by shaking, combine the petroleum ether extracts, and evaporate to dryness. Dissolve the residue in 1 ml of ethanol as the test solution. Dissolve oleanolic acid CRS in ethanol to produce a solution containing 1 mg per ml as the reference solution. Carry out the method for thin layer chromatography (Appendix Ⅵ B), using silica gel G as the coating substance and a mixture of chloroform and methanol (40∶3) as the mobile phase. Apply separately 4 μl of the test solution and 2 μl of the reference solution to the plate. After developing and removal of the plate, dry in air. Spray with phosphomolybdic acid TS and heat to the spots clear. The spot in the chromatogram obtained with the test solution corresponds in position and colour to the spot in the chromatogram obtained with the reference solution.
(2) Evaporate 50 ml to about 30 ml on a water bath, cool, extract with 20 ml of ether, separate the ether layer and evaporate it to dryness. Dissolve the residue in 1 ml of dehydrated ethanol as the test solution. Macerate 0.2 g of Radix Angelicae Sinensis reference drug in 3 ml of ether for 1 hour, and use the supernatant as the reference drug solution. Carry out the method for thin layer chromatography (Appendix Ⅵ B), using silica gel G as the coating substance and a mixture of *n*-hexane and ethyl acetate (9∶1) as the mobile phase. Apply separately 6 μl of the test solution and 1-2 μl of the reference drug solution to the plate. After developing and removal of the plate, dry in air. Examine under ultraviolet light at 365 nm. The fluorescent spots in the chromatogram obtained with the test solution correspond in position and colour to the spots in the chromatogram obtained with the reference drug solution.

Ethanol content 20 per cent-25 per cent (Appendix Ⅸ M).

Other requirements Complies with the general requirements for medicinal wines (Appendix Ⅰ M).

Action To replenish *qi* and promote blood circulation, and expel *wind* and dredge meridians.

Indications Obstruction of *qi* and blood flow due to disharmony between *qi* and blood and affliction of *wind-dampness*, with manifestations of pain of limbs and muscular spasm.

Usage and dosage 30-60 ml, 3 times a day.

Precaution Be cautious about hypertention patients; contraindicated for pregnant women.

Storage Preserve in tightly closed containers, stored in a cool place.

Sanmiao Wan
(三妙丸)

Sanmiao Pills

Ingredients Rhizoma Atractylodis (stir-baked) 600 g; Cortex Phellodendri Chinensis (stir-baked) 400 g; Radix Achyranthis Bidentatae 200 g.

Procedure Pulverize the above three ingredients to fine powder, sift and mix thoroughly. Make pills with water and dry.

Description Greyish-yellow watered pills; taste, bitter and pungent.

Identification (1) Microscopical: Needle crystals of calcium oxalate fine, 10-32 μm long, irregularly filling in parenchymatous cells. Fibre bundles yellow, surrounded by parenchymatous cells containing prisms of calcium oxalate, forming crystal fibres, walls of crystal cells lignified and thickened. Wood fibres in bundles, with thinner and non-lignified walls; pits sparse, with obligue slit-shapped pit apertures, cross-shape or V-shape.
(2) Triturate 0.1 g to powder, add 10 ml of ether, ultrasonicate for 15 minutes, filter and discard the ether. To the residue add 5 ml of methanol, ultrasonicate for 15 minutes and filter. Concentrate the filtrate to 1 ml as the test solution. Prepare a solution of 0.1 g of Cortex Phellodendri Chinensis reference drug in the same manner as the reference drug solution. Dissolve berberine hydrochloride CRS in methanol to produce a solution containing 0.5 mg per ml as the reference solution. Carry out the method for thin layer chromatography (Appendix Ⅵ B), using silica gel G as the coating substance and a mixture of benzene, ethyl acetate, isopropanol methanol, and concentrated ammonia TS (12∶6∶3∶3∶1) as the mobile phase. Apply separately 2 μl of the test solution, 1 μl of each of the reference drug solution and the reference solution to the plate. After developing in a chamber pre-equilibrated with ammonia vapour and removal of the plate, dry in air, and examine under ultraviolet light at 365 nm. The yellow fluorescent spots in the chromatogram obtained with the test solution correspond in position and colour to the spots in the chromatogram obtained with the reference drug solution and reference solutions.

Other requirements Comply with the general requirements for pills (Appendix Ⅰ A).

Assay Take 1.5 g of pulverized powder, accurately weighed, to a Soxhlet's extractor, heat under reflux with a quantity of ether for 1-2 hours, filter and expel ether from the residue, add a quantity of methanol, reflux until the solution is colourless. Transfer accurately the solution (concentrate if necessary) to a 50 ml volumetric flask, dilute to volume with methanol, shake well, used as the test solution. Dissolve berberine hydrochloride CRS, weighed accurately, in methanol to produce a solution containing 60 μg per ml as the reference solution. Carry out the method for thin layer chromatography (Appendix Ⅵ B), using silica gel G as the coating substance and a mixture of benzene, ethyl acetate, isopropanol, methanol and concentrated ammonia TS (12∶6∶3∶3∶1) as the mobile phase. Apply separately 1 μl of the test solution, and 1 μl and 3 μl of the reference solution to the plate. After developing in a twin-trough chamber pre-equilibriated with ammonia vapour and mobile phase vapour for 15 minutes and removal of the plate, dry in air. Carry out the method for thin layer chromatography (Appendix Ⅵ B, thin layer chromatographic scanning method), scan at wavelength of $\lambda = 365$ nm with fluorescence mode, measure the integral absorbance both of the test solution and reference solution respectively. Calculate the content.
It contains not less than 2.0 mg per gram of berberine hydrochloride ($C_{20}H_{18}ClNO_4$), referred to the dried drug of Cortex Phellodendri Chinensis.

Action To clear *heat* and *dampness*.

Indications Obstruction of *qi* and blood with pain due to pouring of *damp-heat* with manifestations of red, swollen and painful feet and knees with a hot sensation and leaden legs and scanty deep-coloured urine.

Usage and dosage 6-9 g, 2-3 times a day.

Precaution Be cautious about pregnant women.

Storage Preserve in tightly closed containers, protected from moisture.

Sanqi Pian
(三七片)

Sanqi Tablets

Sanqi Tablets are the tablets prepared from Radix Notoginseng.

Procedure Pulverize 500 g of Radix et Rhizoma Notoginseng to fine powder, and a quantity of excipient, make granules, compress into 1000 (big tablet) or 2000 (small tablet) tablets.

Prescription Greyish-yellow to brownish-yellow tablets; taste, bitter, slightly sweet.

Identification (1) Microscopical: Fragments of resin canals containing yellow secretion.
(2) Macerate 0.5 g, in powder, in 10 ml of methanol by shaking for 30 minutes, filter, evaporate the filtrate to dryness, and dissolve the residue in 1 ml of methanol as the test solution. Dissolve notoginsenoside R_1 CRS, ginsenoside Rb_1 CRS and ginsenoside Rg_1 CRS in methanol to produce a mixture containing 0.5 mg of each per ml as the reference solution. Carry out the method for thin layer chromatography (Appendix Ⅵ B), using silica gel G as the coating substance and a mixture of chloroform, methanol and water (7∶3∶0.5) as the mobile phase. Apply separately 5 μl of each of the two solutions to the plate. After developing and removal of the plate, dry in air. Spray with a 10% sulfuric acid in ethanol and heat at 105℃ to the spots clear. The spots in the chromatogram obtained with the test solution correspond in position and colour to the spots in the chromatogram obtained with the reference solution. Examine under ultraviolet light at 365 nm, the fluorescent spots in the chromatography obtained with the test solution correspond in position and colour to the spots in the chromatogram obtained with the reference solution.

Other requirements Comply with the general requirements for tablets (Appendix Ⅰ D)

Assay Carry out the method for high performance liquid chromatography (Appendix Ⅵ D).

Chromatographic system and system suitability Use octadecylsilane bonded silica gel as the stationary phase, acetonitrile as the mobile phase A, water as the mobile phase B, elute in gradient as the following.

Time (minutes)	mobile phase A (per cent V/V)	mobile phase B (per cent V/V)
0-12	19	81
12-60	19→36	81→64

As detector a spectrophotometer set at 203 nm. The number of theoretical plates of the column is not less than 4000, calculated with the reference to the peak of notoginsenoside R_1.

Reference solution Dissolve a quantity of ginsenoside Rg_1 CRS, ginsenoside Rb_1 CRS, and notoginsenoside R_1 CRS, weighed accurately, in methanol to produce a mixture solution containing 0.4 mg, 0.4 mg, and 0.1 mg per ml respectively as the reference solution.

Test solution Take 10 tablets, ground into fine powder, weigh accurately 0.8 g in a stopper conical flask, add 50 ml of methanol, weigh, allow to stand overnight, heat under reflux on a water bath at 80℃ for 2 hours, cool, weigh again, replenish the loss of weight with methanol, shake well, filter and use the successive filtrate as the test solution.

Procedure Inject accurately 10 μl of the reference solution and the test solution into the column, respectively, and calculate the content.

It contains not less than 10.0 mg of per small tablet, or 20.0 mg of per big tablet, of the total amount of ginsenoside Rg_1 ($C_{42}H_{72}O_{14}$), ginsenoside Rb_1 ($C_{54}H_{92}O_{23}$) and notoginsenoside R_1 ($C_{47}H_{80}O_{18}$), referred to Radix Notoginseng.

Action To dissipate blood stasis to arrest bleeding, and reduce swelling to kill pain.

Indications Hemoptysis, hematemesis, rhinorrhagia, bloody stools, metrorrhagia and metrostaxis, traumatic hemorrhage, stabbing pain in the chest and abdomen, and painful bruise from fall or stumble.

Usage and dosage 4-12 small tablets or 2-6 big tablets, 3 times a day.

Precaution Contraindicated for pregnant women.

Strength 0.25 g of crude drug per small tablet, or 0.5 g of crude drug per big tablet

Storage preserve in tightly closed containers.

Sanqi Shangyao Pian (三七伤药片)

Sanqi Shangyao Tablets

Ingredients Radix et Rhizoma Notoginseng 52.5 g; Radix Aconiti Kusnezoffii (steamed) 52.5 g; Radix Aconiti Brachypodi 23 g; Borneolum Syntheticum 1.05 g; Rhizoma Drynariae 492.2 g; Flos Carthami 157.5 g; Caulis Sambuci 787.5 g; Radix Paeoniae Rubra 87.5 g.

Procedure Pulverize Radix et Rhizoma Notoginseng; Radix Aconiti Kusnezoffii and Radix Aconiti Brachypodi to fine powder, Triturate Borneolum Syntheticum to fine powder. Decoct the other 4 ingredients with water twice, 2 hours for the first time and 1 hour for the second, combine the decoctions and filter. Concentrate the decoction to a thin extract with relative density of 1.05 (80-90℃) and stand by. Separate the supernatant and concentrate to a thick extract with a relative density of 1.40 (80-90℃). Add the above fine powder of Radix et Rhizoma Notoginseng; Radix Aconiti Kusnezoffii and Radix Aconiti Brachypodi, make granules and dry; then add the fine powder of Borneolum Syntheticum, mix thoroughly, make to 1000 tablets and coat with sugar.

Description Sugar coated tablets with dark brown core; taste, slightly bitter.

Identification (1) Pulverize 10 tablets to fine powder, add 15 ml of methanol, ultrasonicate for 1 hour, and filter. Evaporate the filtrate to dryness, and dissolve the residue in 5 ml of methanol as the test solution. Dissolve ginsenoside Rg_1 CRS and notoginsenoside R_1 CRS in methanol to produce a mixture containing 2 mg of each per ml as the reference solution. Carry out the method for thin layer chromatography (Appendix Ⅵ B), using silica gel G as the coating substance and the lower layer of a mixture of chloroform, *n*-butanol, methanol, and water (2∶4∶1∶2) as the mobile phase. Apply separately 2 μl of each of the two solutions to the plate. After developing and removal of the plate, dry in air. Spray with a 10% sulphuric acid in ethanol and heat at 105℃ for several minutes. The purplish-red spots in the chromatogram obtained with the test solution correspond in position and colour to the spots in the chromatogram obtained with the reference solution.

(2) Triturate 6 tablets, removed sugar coats, to fine powder, add 50 ml of methanol, heat under reflux for 1 hour, filter and evaporate the filtrate to dryness. Dissolve the residue in 20 ml of water, and extract with three 25-ml quantities of *n*-butanol saturated by water, combine the *n*-butanol extracts, and wash with two-25 ml quantities of water saturated by *n*-butanol. Evaporate the *n*-butanol extracts to dryness, and dissolve the residue in 1 ml methanol. Apply the methanol solution to a column packed with neutral aluminium oxide (100-120 mesh, 5 g, 10-15 mm in internal diameter) and elute with 50 ml of methanol. Collect the eluate, evaporate the eluate on a water bath to dryness, and dissolve the residue in 1 ml of methanol as the test solution. Dissolve paeoniflorin CRS in methanol to produce a solution containing 1 mg per ml as the reference solution. Carry out the method for thin layer chromatography (Appendix Ⅵ B), using silica gel G as the coating substance, and the lower layer of a mixture of chloroform, methanol and water (13∶7∶2), standing under 10℃, as the mobile phase. Apply separately 5-10 μl each of the above two solutions to the plate. After developing and removal of the plate, dry in air. Spray with 5% vanillin in sulfuric acid, and heat at 105℃ to the spots clear. The spot in the chromatogram obtained with the test solution corresponds in position and colour to the spot in the chromatogram obtained with the reference solution.

Limit test of aconitine To 30 tablets, removed the sugar coats, pulverize to fine powder, add 150 ml of ether, stir for 10 minutes, then add 10 ml of ammonia TS, shake for 30 minutes, and allow to stand for 2 hours. Separate the ether layer, recover ether to dryness, dissolve the residue in dehydrated ethanol and transfer to a 2 ml volumetric flask, dilute to volume, and mix well as the test solution. Dissolve aconitine CRS in dehydrated ethanol to produce a solution containing 1 mg per ml as the reference solution. Carry out the method for thin layer chromatography (Appendix Ⅵ B), using silica gel G as the coating substance and a mixture of hexane, ethyl acetate, and diethylamine (4∶3∶1) as the mobile phase. Apply separately 10 μl of the test solution and 2 μl of the reference solution to the plate. After developing and removal of the plate, dry in air and spray with dilute potassium iodobismuthate TS. The size of the spot in the chromatogram obtained with the test solution is less than the corresponding spot in the chromatogram obtained with the reference solution or no spot reveals in the chromatogram obtained with the test solution.

Other requirements Comply with the general requirements for tablets (Appendix Ⅰ D).

Assay Carry out the method for high performance liquid chromatography (Appendix Ⅵ D).

Chromatographic system and system suitability Use octadecylsilane bonded silica gel as the stationary phase, and a mixture of acetonitrile and water (20∶80) as the mobile phase. As detector a spectrophotometer set at 283 nm. The number of theoretical plates of the column is not less than 4000, calculated with the reference to the peak of naringin.

Reference solution Weigh accurately a quantity of naringin CRS, dried to constant weight at 105℃, dissolve in methanol to produce a solution containing 80 μg per ml.

Test solution With 20 tablets, remove the sugar coat, pulverize to fine powder, and weigh accurately 0.5 g of the powder in a stopper conical flask, add accurately 50 ml of methanol, closely stopper and weigh. Ultrasonicate for 30 minutes (power, 250 W; frequency, 50 kHz), cool, weigh again, replenish the lost weight with methanol, mix well and centrifuge, separate the supernatant, and filter. Discard the initial filtrate, and use the successive filtrate as the test solution.

Procedure Inject accurately 10 μl of each of the reference solutions and the test solution into the column respectively and calculate the content.
It contains not less than 0.50 mg of naringin ($C_{27}H_{32}O_{14}$) per tablet, referred to Rhizoma Drynariae.

Action To relax muscles and tendons and promote blood circulation, and dissipate blood stasis to kill pain.

Indications Traumatic injuries, retention of *wind-dampness*, arthrosis with pain; acute or chronic strains and neuralgia with above symptoms.

Usage and dosage 3 tablets, 3 times a day; or follow doctor's advice.

Precaution Taken according to the documented dosage for its strong potency; contraindicated for pregnant women; be cautious about patients with cardiovascular diseases.

Storage Preserve in tightly closed containers.

Sanwei Jili San
(三味蒺藜散)

Sanwei Jili Powder

Sanwei Jili Powder is a prescription used by Mongolian Nationality.

Ingredients Fructus Tribuli 250 g; Fructus Malvae 150 g; Eriocheir seu Potamon 150 g.

Procedure Pulverize the above three ingredients to coarse powder, sift and mix well.

Description A greyish-yellow powder; odour, slightly fishy; taste, bitter and slight salty.

Identification (1) Microscopical: Yellow stone cells long ellipsoidal or subrounded, in groups or scattered, with distinct pits. Fibres long fusiform, pale yellow, scattered or in bundles, 250-360 μm long. Polycellular hairs stellate, mostly broken.
(2) To 0.5 g add 5 ml of dilute nitric acid TS, heat on a water bath for 30 minutes and filter. To 1 ml of the filtrate add 1 ml of ammonium molybdate TS and heat; a yellow precipitate is produced. Filter, wash the precipitate with a mixture of 2 ml of dilute nitric acid TS and 1 ml of ammonium molybdate TS, add excessive quantity of ammonia TS; the precipitate is dissolved.

Other requirements Complies with the general requirements for medicinal teas (Appendix Ⅰ T).

Action To remove *damp-heat* and induce diuresis.

Indications Downward flow of *damp-heat*, painful burning sensation during urination.

Usage and dosage 3-4.5 g, 2-3 times a day, taken in decoction form.

Storage Preserve in well closed containers, protected from moisture.

Sanzi San
(三子散)

Sanzi Powder

Sanzi Powder is a prescription used by Mongolian Nationality.

Ingredients Fructus Chebulae 200 g; Fructus Toosendan 200 g; Fructus Gardeniae 200 g.

Procedure Pulverize the above three ingredients to coarse powder, sift and mix well.

Description A gingery-yellow to brownish yellow powder; odour, slight; taste, bitter, astringent and slightly sour.

Identification (1) Microscopical: Fibre bundles of pericarp surrounded by parenchymatous cells containing prisms or clusters of calcium oxalate, forming crystal fibers, crystal cells unevenly thickened-walled, lignified. Stone cells of testa yellow or brownish, mostly broken, when whole, elongated polygonal, rectangular or irregular, with thickened walls, big rounded pits, lumina brownish-red. Fibre layers of pericarp pale yellow, obliquely crisscrossed, with thin walls and pits.
(2) To 1 g of the powder add 10 ml of ether, extract for 10 minutes with shaking, discard the ether solution and evaporate ether from the residue. Add 10 ml of ethyl acetate, heat under reflux on a water bath for 1 hour, cool, and filter. Evaporate the filtrate to dryness, and dissolve the residue in 2 ml of ethanol as the test solution. Prepare a solution of 0.5 g of Fructus Chebulae reference drug in the same manner as the reference drug solution. Dissolve geniposide CRS in ethanol to prepare a solution containing 1 mg per ml as the reference solution. Carry out the method for thin layer chromatography (Appendix Ⅵ B), using silica gel G as the coating substance and a mixture of ethyl acetate, acetone, formic acid and water (10∶7∶2∶0.5) as the mobile phase. Apply separately 5 μl of each of the three solutions to the plate. After developing and removal of the plate, dry in air. Spray with 10% sulphuric acid in ethanol and heat to the spots clear. The spots in the chromatogram obtained with the test solution correspond in position and colour to the spots in the chromatogram obtained with the reference drug solution and the reference solution.

Other requirements Complies with the general requirements for tea (Appendix Ⅰ T).

Assay Carry out the method for high performance liquid chromatography (Appendix Ⅵ D).

Chromatographic system and system suitability Use octadecylsilane bonded silica gel as the stationary phase, and a mixture of acetonitrile and water (15∶85) as the mobile

phase. As detector a spectrophotometer set at 238 nm. The number of theoretical plates of the column is not less than 4000, calculated with the reference to the peak of geniposide.

Reference solution Weigh accurately a quantity of geniposide CRS, dissolve in methanol to prepare a solution containing 30 μg per ml.

Test solution Weigh accurately 0.3 g of the powder in a stopper conical flask, add accurately 25 ml of methanol, stopper closely and weigh. Ultrasonicate for 20 minutes (power, 200 W; frequency, 50 kHz), cool, weigh again, replenish the lost weight with methanol, mix well and filter. Measure accurately 10 ml of the successive solution to a 25 ml volumetric flask, dilute with methanol to volume, mix well as the test solution.

Procedure Inject accurately 10 μl of each of the reference solution and the test solution into the column respectively and calculate the content.
It contains not less than 5.4 mg of geniposide ($C_{17}H_{24}O_{10}$) per gram, referred to Fructus Gardeniae.

Action To reduce *heat* in blood and counteract *toxicity*.

Indications Fever in epidemic diseases or *heat* in blood, either acute or chronic.

Usage and dosage 3-4.5 g, 2-3 times a day, taken in decoction form.

Storage Preserve in well closed containers, protected from moisture.

Shangshi Zhitong Gao (伤湿止痛膏)

Shangshi Zhitong Plaster

Ingredients Extractum Antirheumatici et Analgesic Liquidum 50 g; Methyl Salicylate 15 g; Mentholum 10 g; Borneolum Syntheticum 10 g; Camphora 20 g; Extractum Cymbopogonis 12.5 g; Extractum Belladonnae Liquidum 30 g.

Procedure Pulverize 1 portion each of Radix Aconiti Kusnezoffii, Radix Aconiti, Olibanum, Myrrha, Semen Strychni and Flos Caryophylli, 2 portions each of Cortex Cinnamomi, Herba Schizonepetae, Radix Saposhnikoviae, Herba Erodii seu Geranii, Cortex Periplocae, Herba Centellae and Rhizoma Drynariae and 3 portions each of Radix Angelicae Dahuricae, Rhizoma Kaempferiae and Rhizoma Zingiberis to coarse powder and prepare Extractum Antirheumatici et Analgesit Liquidum with 90% ethanol to a liquid extract with a relative density of about 1.05. Weigh the other ingredients, add 3.7-4.0 fold by weight of the plaster base composed of rubber and rosin to make adhesive masses. Spread the masses on the tape, cut into sections, cover with gauze as liner and cut into small pieces of suitable size.

Description A pale yellowish-green to pale yellow adhesive tape plaster; odour, aromatic.

Identification (1) Heat under reflux 2 pieces, removed the coats, with 50 ml of ethanol for 1 hour. Concentrate the ethanol extract to about 2 ml, add 20 ml of 5% solution of sulfuric acid, stir and filter. Transfer the filtrate to a separator, adjust to alkaline with ammonia TS, extract with 20 ml of chloroform. Separate the chloroform layer and evaporate to dryness. Dissolve the residue in 1 ml of dehydrated ethanol, concentrate to 0.2 ml as the test solution. Dissolve atropine sulfate CRS in dehydrated ethanol to produce a solution containing 2 mg per ml as the reference solution. Carry out the method for thin layer chromatography (Appendix Ⅵ B), using silica gel G mixed with sodium carboxymethyl cellulose as the coating substance and a mixture of chloroform, acetone, methanol and concentrated ammonia TS (70∶10∶15∶2) as the mobile phase. Apply separately 15 μl of the test solution and 5 μl of the reference solution to the plate. After developing and removal of the plate, dry in air and spray with dilute potassium iodobismuthate TS. The spot in the chromatogram obtained with the test solution corresponds in position and colour to the spot in the chromatogram obtained with the reference solution.
(2) Place 8 pieces, removed the coats and cut into pieces, to a 250 ml flask. Add 100 ml of water and connect to a apparatus for the determination of volatile oil. Add water through the apparatus until the graduated tube is filled and overflows to the flask, and then add 5 ml of ethyl acetate. Heat under reflux for 40 minutes. Transfer the liquid from the apparatus to a separator, filter the ethyl acetate layer through a funnel laid with anhydrous sodium sulphate. Use the filtrate as the test solution. Dissolve 20 mg of camphor CRS, 10 mg of menthol CRS, 10 mg of a mixture of (±)-borneol and (±) isoborneol and 15 mg of methyl salicylate CRS in 10 ml of ethyl acetate to produce a solution as the reference solution. Carry out the method for gas chromatography (Appendix Ⅵ E), using a column of 2 m in length, packed with 2.5% ethylene glycol glutarate as the liquid phase on the solid support, maintain the temperature at 75℃. Inject a quantity volume of the test solution and the reference solution respectively to the column, the retention time of the peaks obtained with the test solution and the reference solution corresponds with each other.

Extractive in plaster mass It contains not less than 1.7 g per 100 cm^2 (Appendix Ⅰ I method 1), using ether as the solvent.

Other requirements Comply with the general requirements for adhesive plasters (Appendix Ⅰ D).

Action To expel *wind-dampness*, promote blood circulation to kill pain.

Indications Rheumatic arthritis, muscular pain and swollen and painful joints.

Usage and dosage For external use, spread it onto the lesion.

Precaution Be cautious about pregnant women.

Storage Preserve in tightly closed containers, and store in a cool and dark place.

Shangtongning Pian (伤痛宁片)

Shangtongning Tablets

Ingredients Olibanum (processed) 7 g; Myrrha (processed) 7 g; Radix et Rhizoma Nardostachyos 7 g; Rhizoma Corydalis (processed with vinegar) 14 g; Radix et Rhizoma Asari 14 g; Rhizoma Crperi (processed) 70 g; Rhizoma Kaempferiae 70 g; Radix Angelicae Dahuricae 112 g.

Procedure Pulverize the above eight ingredients to fine powder, sift and mix well. Add starch and cerealose, make granules, compress into 1000 tablets.

Description Khaki colour tablets; odour, characteristic; taste, pungent and bitter.

Identification (1) To 3 g of the tablets, pulverized to

powder, add 50 ml of ethyl acetate, ultrasonicate for 10 minutes, cool and filter, evaporate the filtrate to dryness, and dissolve the residue in 1 ml of ethyl acetate as the test solution. Prepare a solution of 0.5 g of Radix et Rhizoma Asari reference drug in 30 ml of ethyl acetate in the same manner as the reference drug solution. Carry out the method for thin layer chromatography (Appendix Ⅵ B), using silica gel G as the coating substance and a mixture of petroleum ether (60-90℃) and ethyl acetate (16∶5) as the mobile phase. Apply separately 5 μl of the test solution and the reference solution to the plate. After developing and removal of the plate, dry in air. The spots in the chromatogram obtained with the test solution correspond in position and colour to the spots in the chromatogram obtained with the reference drug solution. Examine under ultraviolet light at 365 nm. The same red fluorescent spots are shown in both chromatograms.

(2) To 3 g of the tablets, pulverized to powder, add 30 ml of petroleum ether (30-60℃), ultrasonicate for 10 minutes, allow to cool, filter, evaporate the filtrate to dryness, and dissolve the residue in 1 ml of ethyl acetate as the test solution. Prepare a solution of 1 g of Rhizoma Cyperi reference drug in the same manner as the reference drug solution. Dissolve α-Cyperone CRS in ethyl acetate to produce a solution containing 5 μl per ml as the reference solution. Carry out the method for thin layer chromatography (Appendix Ⅵ B), using silica gel GF_{254} as the coating substance and a mixture of *n*-hexane and ethyl acetate (17∶3) as the mobile phase. Apply separately 5 μl of the above three solutions to the plate. After developing and removal of the plate, dry in air, and examine under ultraviolet light at 254 nm. The spots in the chromatogram obtained with the test solution correspond in position and colour to the spots in the chromatogram obtained with the reference drug solution and the reference solution.

(3) To 7 g of the tablets, pulverized to powder, add 50 ml of petroleum ether (60-90℃), ultrasonicate for 15 minutes, cool and filter, evaporate the filtrate to about 1 ml as the test solution. Prepare a solution of 0.5 g of Rhizoma Kaempferiae reference drug and 30 ml of petroleum ether (60-90℃) in the same manner as the reference drug solution. Dissolve ethyl-*p*-methoxycinnamate CRS in petroleum ether (60-90℃) to produce a solution containing 5 mg per ml as the reference solution. Carry out the method for thin layer chromatography (Appendix Ⅵ B), using silica gel GF_{254} as the coating substance and a mixture of *n*-hexane and ethyl acetate (4∶1) as the mobile phase. Apply separately 1 μl of the test solution, the reference drug solution, and the reference solution to the plate. After developing and removal of the plate, dry in air, and examine under ultraviolet light at 254 nm. The spots in the chromatogram obtained with the test solution correspond in position and colour to the spots in the chromatogram obtained with the reference drug solution and the reference solution.

Other requirements Comply with the general requirements for tablets (Appendix Ⅰ D).

Assay Carry out the method for high performance liquid chromatography (Appendix Ⅵ D).

Chromatographic system and system suitability Use octadecylsilane bonded silica gel as the stationary phase and a mixture of methanol and water (55∶45) as the mobile phase. After the peak of imperatorin obtained, use the mixture of methanol and water (90∶10) as the mobile phase for 20 minutes. As detector a spectrophotometer set at 250 nm. The number of theoretical plates for the column is not less than 9000, calculated with the reference to the peak of imperatorin.

Reference solution Dissolve a quantity of imperatorin CRS, accurately weighed, in methanol to produce a solution containing 20 μg per ml as the reference solution.

Test solution To 20 tablets, accurately weighed, pulverized to fine powder, weighed accurately about 2 g of the powder, in a stopper conical flask, add accurately 25 ml of methanol, weigh accurately, ultrasonicate for 20 minutes, allow to cool, weigh accurately again, replenished the lost weight with methanol, mix well and filter. Discard the initial filtrate, and use the successive filtrate as the test solution.

Procedure Inject accurately 10 μl of the reference solution and the test solution into the column and calculate the content.

It contains not less than 68 μg of imperatorin ($C_{16}H_{14}O_4$) per tablet, referred to Radix Angelicae Dahuricae.

Action To dissipate blood stasis to kill pian.

Indications Traumatic injuries and lumbar sprain with manifestations of bruise, ecchymosis, painful swelling and immobilized body.

Usage and dosage 5 tablets, twice a day.

Precaution Contraindicated for pregnant women.

Strength 0.36 g per tablet

Storage Preserve in tightly closed containers.

Shanju Jiangya Pian (山菊降压片)

Shanju Jiangya Tablets

Ingredients Fructus Crataegi 500 g; Flos Chrysanthemi 83.3 g; Rhizoma Alismatis (processed with salt) 62.5 g; Spica Prunellae 62.5 g; Herba Cirsii 83.3 g; Semen Cassiae (stir-baked) 83.3 g.

Procedure Pulverize Rhizoma Alismatis to fine powder. Decoct the other five ingredients 2 times, 3 hours for the first, and 2 hours for the second time. Combine the decoctions, filter, concentrate the filtrate in vacuum to a thick extract with a relative density of 1.30-1.40 (50℃). Add the fine powder of Rhizoma Alismatis, mix well, dry in vacuum, pulverize, sift, add a quantity of starch, mix well, make granules, compress into 1000 tablets and coat with film.

Description Film-coated tablets with brown core; taste, sour, slightly astringent.

Identification (1) Microscopical: Parenchymateous cells subrounded, with elliptical pits gathered into pit groups. Anticlinal walls of endodermal cells sinuous, relatively thickened, lignified, with sparse and fine pit-canals.

(2) Grind 5 tablets to fine powder, add 20 ml of dilute sulfuric acid TS and 20 ml of chloroform, heat under reflux for 15 minutes, allow to cool, separate the chloroform layer, concentrate to 1 ml and use it as the test solution. Prepare a solution with 0.5 g of Semen Cassiae reference drug in the same manner as the reference drug solution. Dissolve emodin CRS and chrysophanol CRS in methanol to prepare a mixture containing 0.5 mg each per ml as the reference solution. Carry out the method for thin layer chromatography (Appendix Ⅵ B), using silica gel G as the coating substance and the upper layer of a mixture of petroleum ether (30-60℃), ethyl formate and formic acid (15∶5∶1) as the mobile phase. Apply separately 10 μl of the test solution and 5 μl of each of the reference drug solution and the reference solution to the plate. After developing and removal of the plate, dry in air, and examine under

ultraviolet light at 365 nm. The orange-yellow fluorescent spots in the chromatogram obtained with the test solution correspond in position and colour to the spots in the chromatogram obtained with the reference drug solution. The orange-yellow fluorescent spots in chromatogram obtained with test solution correspond in position and colour to the spot in the chromatogram obtained with the reference solution. Expose the plate to ammonia vapour, the spots turn red.

Other requirements Comply with the general requirements for pills (Appendix Ⅰ D).

Ethyl acetate extractives Take 30 tablets, weigh accurately, grind to fine powder, weigh accurately 3 g, add accurately 50 ml of ethyl acetate, carry out the method for determination of extractives (Appendix Ⅹ A, the hot extraction method), not less than 7.0 mg per tablet.

Assay Carry out the method for high performance liquid chromatography (Appendix Ⅵ D).

Chromatographic system and system suitability Use octadecylsilane bonded silica gel as the stationary phase and a mixture of methanol and 0.1% solution of phosphoric acid (85∶15) as the mobile phase. As detector a spectrophotometer set at 430 nm. The number of theoretical plates of the column is not less than 2000, calculated with the reference to the peak of chrysophanol.

Reference solution Dissolve a quantity of chrysophanol CRS, accurately weighed, in methanol to prepare a solution containing 4 μg per 1 ml as the reference solution.

Test solution Grind 30 tablets, weighed accurately, to fine powder, weigh accurately 3 g, in a stopper conical flask. Add accurately 50 ml of methanol, stopper tightly, and weigh. Ultrasonicate (power, 160 W; frequency, 50 kHz) for 30 minutes, cool, weigh again, replenish the loss of weight with methanol, mix well, and filter. Measure accurately 25 ml of the successive filtrate, add 2 ml of hydrochloric acid, heat under reflux on a water bath for 1 hour, cool, transfer to a 50 ml volumetric flask, dilute with methanol to volume, mix well, filter and use the successive filtrate as the test solution.

Procedure Inject accurately 20 μl of the reference solution and the test solution into the column, respectively, and calculate the content.
It contains not less than 40 μg of chrysophanol ($C_{15}H_{10}O_4$) per tablet, referred to Semen Cassiae.

Action To pacify the liver to restrain hyperactivity of *yang*.

Indications Headache, dizziness, tinnitus, amnesia, aching and weakness of the lower back and knees, hot sensation in the palms, soles and chest, palpitation and insomnia due to hyperactivity of *yang* and a deficiency of *yin*; hypertension with above symptoms.

Usage and dosage 5 tablets, twice a day, or follow doetor's advice.

Precaution Discomfort of the stomach is seen sometimes, but it will have spontaneous remission.

Strength 0.3 g per tablet

Storage Preserve in tightly closed containers.

Shanzha Huazhi Wan (山楂化滞丸)

Shanzha Huazhi Pills

Ingredients Fructus Crataegi 500 g; Fructus Hordei Germinatus 100 g; Massa Medicata Fermentata 100 g; Semen Arecae 50 g; Semen Raphani 50 g; Semen Pharbitidis 50 g.

Procedure Pulverize the above 6 ingredients to fine powder, sift and mix thoroughly. To each 100 g of the powder add 25 g of brown sugar and 90-100 g of refined honey to make big honeyed pills.

Description Brown big honeyed pills; taste, sour and sweet.

Identification (1) Microscopical: Pericarp stone cells pale purple red, red or yellowish-brown, subrounded or polygonal, up to about 125 μm in diameter. Pericarp cells longitudinally arranged, usually 1 long cells and 2 short cells connected alternatively; walls of the long cells thickened, sinuous and lignified. Endoblastic pieces colourless, walls relatively thickened, with numerous large subrounded pits. Testa palisade cells pale brown or brown, 48-80 μm in length. Testa pieces yellow or brownish-red; cells minor, polygonal, with thickened walls.
(2) Triturate well 9 g with a quantity of kieselguhr, grind and mix thoroughly, add 50 ml of methanol, heat under reflux on a water bath for 30 minutes, and filter. Use the methanol filtrate as the test solution. Dissolve ursolic acid CRS in methanol to produce a solution containing 1 mg per ml as the reference solution. Carry out the method for thin layer chromatography (Appendix Ⅵ B), using silica gel G mixed with sodium carboxymethylcellulose as the coating substance and a mixture of chloroform, and acetone (9∶1) as the mobile phase. Apply separately 10 μl of each of the two solutions to the plate. After developing and removal of the plate, dry in air. Spray with 10% sulphuric acid in ethanol, and heat at 105℃ for several minutes. The spot in the chromatogram obtained with the test solution corresponds in position and colour to the spot in the chromatogram obtained with the reference solution.

Other requirements Comply with the general requirements for pills (Appendix Ⅰ A).

Assay Weigh accurately 3 g of the pills, obtained in the test of weight variation and cut into pieces, add 10 ml of water, stand for disintegration. Filter, wash the drug residue with 10 ml of water, dry at room temperature to powder. Dry at 100℃ and place the drug residue and the filter paper in a Soxhlet's extractor, add a quantity of ether, heat under reflux for 4 hours. Recover the solvent of the extract to dryness, macerate the residue with two 5-ml quantities of petroleum ether (30-60℃) for 2 minutes, discard the solution, dissolve the residue in a mixture of dehydrated ethanol and chloroform (3∶2) by heating gently, transfer to a 5 ml volumetric flask, dilute to the volume and mix well. Dissolve a quantity of ursolic acid CRS, weighed accurately, with dehydrated ethanol to produce a solution containing 0.5 mg per ml as the reference solution. Carry out the method for thin layer chromatography (Appendix Ⅵ B), using silica gel G as the coating substances and a mixture of cyclohexane, chloroform, ethyl acetate and formic acid (20∶5∶8∶1) as the mobile phase. Apply accurately 6 μl of the test solution, 4 μl and 8 μl of the reference solutions to the plate. After developing and removal of the plate, dry in air. Spray with 10% sulfuric acid in ethanol, heat at 110℃ for 5 to 7

minutes to the spots clear. Cover with a same size glass to the plate and fix with adhesive tape. Carry out the method of thin layer chromatography (Appendix Ⅵ B, thin layer chromatographic scanning method), scan at the wavelength: λ_S=535 nm, λ_R=650 nm. Measure the integration value of absorbance of the test solution and the reference solution and calculate.

It contains not less than 4.5 mg of ursolic acid ($C_{30}H_{48}O_3$) per pill, referred to Fructus Crataegi.

Action To promote digestion to remove stagnancy and obstruction.

Indications Indigestion due to improper diet with manifestations of fullness in the stomach and abdomen, loss of appetite and constipation.

Usage and dosage 2 pills, 1-2 times a day.

Precaution Contraindicated for pregnant women.

Strength 9 g per pill

Storage Preserve in tightly closed containers.

Shaofu Zhuyu Wan
(少腹逐瘀丸)

Shaofu Zhuyu Pills

Ingredients Radix Angelicae Sinensis 300 g; Pollen Typhae 300 g; Faeces Trogopterori (stir-baked with vinegar) 200 g; Radix Paeoniae Rubra 200 g; Fructus Foeniculi (stir-baked with salt) 100 g; Rhizoma Corydalis (processed with vinegar) 100 g; Myrrha (stir-baked) 100 g; Rhizoma Chuanxiong 100 g; Cortex Cinnamomi 100 g; Rhizoma Zingiberis Praeparatum 20 g.

Procedure Pulverize the above ten ingredients to fine powder, sift and mix thoroughly. To each 100 g of the powder add 100-110 g of refined honey to make big honeyed pills.

Description Brownish-black big honeyed pills; odour, aromatic; taste, pungent and bitter.

Identification (1) Microscopical: Parenchymatous cells fusiform, walls slightly thickened, with very fine oblique crisscross striations. Pollen grains yellow, subrounded or elliptical, about 30 μm in diameter, with fine protuberances on exospores. Clusters of calcium oxalate 7-41 μm in diameter, occurring in parenchymatous cells, often in rows or several clusters contained in one cell. Fibres separated, long fusiform, 24-50 μm in diameter, walls thickened and lignified. Clusters of calcium oxalate fine, about 5 μm in diameter, several clusters contained in one cell. Masses of aleurone grains pale yellow.

(2) Cut 9 g of the pills, into pieces grind with 10 g of kieselguhr, add 50 ml of ethanol, ultrasonicate for 20 minutes, and filter. Evaporate the filtrate to dryness and dissolve the residue in 20 ml of water. Extract with three 20-ml quantities of *n*-butanol saturated with water. Combine the *n*-butanol extracts, wash with three 15-ml quantities of water saturated with *n*-butanol. Discard the aqueous layer, evaporate the *n*-butanol liquid to dryness, dissolve the residue in 20 ml of ethanol, add 2.5 g of activated charcoal, decolourize under heating on a water bath for 2 minutes, cool, and filter. Concentrate the filtrate to about 1 ml as the test solution. Dissolve paeoniflorin CRS in ethanol to produce a solution containing 2 mg per ml as the reference solution. Carry out the method for thin layer chromatography (Appendix Ⅵ B), using silica gel G as the coating substance and a mixture of chloroform, ethyl acetate, methanol and formic acid (40∶5∶10∶0.2) as the mobile phase. Apply separately 5-10 μl of the test solution and 2 μl of the reference solution to the plate. After developing and removal of the plate, dry in air. Spray with 5% vanillin in sulphuric acid and heat to the spots distinct. The spot in the chromatogram obtained with the test solution corresponds in position and colour to the spot in the chromatogram obtained with the reference solution.

Other requirements Comply with the general requirements for pills (Appendix Ⅰ A).

Action To warm meridians to promote blood circulation and disperse *cold* to kill pain.

Indications Infrequent menstruation, dysmenorrhea, abdominal pain after childbirth with manifestations of delayed menstrual cycles, cold and painful lower abdomen during periods, purplish menstrual blood with clots or postpartum lower abdominal pain, alleviated with heat and worse when pressed.

Usage and dosage 1 pill, 2-3 times a day, to be taken with warm yellow rice wine or boiled water.

Precaution Contraindicated for pregnant women.

Strength 9 g per pill

Storage Preserve in tightly closed containers.

Shaolin Fengshi Dieda Gao
(少林风湿跌打膏)

Shaolin Fengshi Dieda Plaster

Ingredients Radix Aconiti 16 g; Radix Aconiti Kusnezoffii 16 g; Radix Linderae 16 g; Rhizoma Bletillae 16 g; Radix Angelicae Dahuricae 16 g; Radix Ampelopsis 16 g; Eupolyphaga seu Steleophaga 16 g; Fructus Chaenomelis 16 g; Rhizoma Sparganii 16 g; Rhizoma Curcumae 16 g; Radix Angelicae Sinensis 16 g; Radix Paeoniae Rubra 16 g; Cortex Cinnamomi 16 g; Radix et Rhizoma Rhei 32 g; Fructus Forsythiae 32 g; Sanguis Draconis 10 g; Olibanum (stir-baked) 6 g; Myrrha (stir-baked) 6 g; Radix et Rhizoma Notoginseng 6 g; Catechu 6 g; Mentholum 8 g; Methyl Salicylate 8 g; Borneolum Syntheticum 8 g.

Procedure Pulverize Sanguis Draconis, Olibanum, Myrrha, Radix et Rhizoma Notoginseng and Catechu to coarse powder, extract with 90% ethanol to a liquid extract with a relative density of 1.05; Decoct the other ingredients, except Mentholum, Methyl Salicylate and Borneolum Syntheticum, with water 3 times, 3 hours for the first and the second time, 2 hours for the third. Combine the decoctions, filter and concentrate the filtrate to a thin extract with a relative density of 1.25-1.30 (80℃). Combine with the above liquid extract, after cooling, add Mentholum, Methyl Salicylate and Borneolum Syntheticum and stir well. Add in 8.5-9.0 folds by weight of plaster base made from rubber and resin etc. to form adhesive masses. Spread the masses on the tape, cut into sections, cover with liner, make holes and cut into small pieces.

Description Slightly red pieces of adhesive plaster, with small holes on the clothing surface; odour, aromatic.

Identification Place 10 pieces to a 250 ml flat-bottomed flask, add 150 ml of water, carry out the method for the determination of volatile oil (Appendix Ⅹ D). Add water through the top of the apparatus until the graduated tube is filled and overflows to the flask, then add 5 ml of ethyl acetate. Heat under reflux for 40 minutes. Transfer the

liquid from the apparatus to a separator, filter the ethyl acetate layer through a funnel laid with anhydrous sodium sulfate, and use the filtrate as the test solution. Dissolve menthol CRS, a mixture of (±)-borneol and (±) isoborneoc CRS and methyl salicylate CRS in ethanol to produce a solution containing 0.8 mg each per ml as the reference solution. Carry out the method for gas chromatography (Appendix Ⅵ E), using a 2 m long column packed with 10% polyethylene glycol (PEG-20M) as the stationary phase; maintain the column temperature at 130℃. Inject a quantity volume of the reference solution and the test solution, respectively, to the column, the retention time of the peaks obtained with the test solution and the reference solution corresponds with each other.

Extractive in plaste mass Carry out the determination method of plaste content for adhesive plasters (Appendix Ⅰ I method 1), use ether as the solvent, not less than 1.5 g per 100 cm^2.

Other requirements Comply with the general requirements for adhesive plasters (Appendix Ⅰ I).

Action To promote blood circulation to dissipate blood stasis, relax muscles and tendons and expel *wind* to disperse *cold*.

Indications Traumatic injuries, rheumatalgia due to *wind-dampness* with manifestations of painful bruise and aching and numbness of the lower back and limbs.

Usage and dosage Applied to the lesion.

Precaution Be cautious about pregnant women, or follow doctor's advice.

Strength (1) 5 cm×7 cm (2) 8 cm×9.5 cm

Storage Preserve in tightly closed containers, stored in a cool place.

Shaoshangling Ding (烧伤灵酊)

Shaoshangling Tincture

Ingredients Rhizoma et Radix Polygoni Cuspidati; Cortex Phellodendri Chinensis; Borneolum Syntheticum.

Procedure Pulverize Rhizoma et Radix Polygoni Cuspidati and Cortex Phellodendri Chinensis to coarse powder, and stir thoroughly. Carry out the method of percolation as described under liquid extract and extract (Appendix Ⅰ O), macerate the coarse powder with 80% ethanol for 48 hours, then percolate tardily. Collect a quantity of the percolation, adjust the content of ethanol to 70%-75% with 80% ethanol and water. Filter, add Borneolum Syntheticum, stir well and pack.

Description A clear, reddish-brown or brown liquid.

Identification (1) Heat under reflux 10 ml of the tincture on a water bath, with 5 drops of hydrochloric acid, for 20 minutes, stand to room temperature. Add 30 ml of 1% solution of sodium hydroxide, transfer to a separator, extract with 30 ml of ethyl acetate and discard the aqueous layer. Wash the ethyl acetate solution with two 20-ml quantities of 1% solution of sodium hydroxide. Recover ethyl acetate to dryness, dissolve the residue in 2 ml of 2% hydrochloric acid in methanol as the test solution. Dissolve berberine hydrochloride CRS in methanol to produce a solution containing 0.1 mg per ml as the reference solution. Carry out the method for thin layer chromatography (Appendix Ⅵ B), using silica gel G as the coating substance and a mixture of benzene, ethyl acetate, methanol, isopropanol and water (20:10:5:5:1) as the mobile phase. Apply separately to the plate 4 μl of each of the above two solutions. Pre-equilibrated the chamber with ammonia vapour for 5 minutes. After developing and removal of the plate, dry in air. Examine under ultraviolet light at 365 nm. The yellow fluorescence spot in the chromatogram obtained with the test solution corresponds in position and colour to the spot in the chromatogram obtained with the reference solution.

(2) To 0.5 g of Rhizoma et Radix Polygoni Cuspidati reference drug, add 10 ml of 80% ethanol, shake for 5 minutes, filter, use the filtrate as the reference drug solution. Carry out the method for thin layer chromatography (Appendix Ⅵ B), using silica gel G as the coating substance and the upper layer of a mixture of petroleum ether (30-60℃), formate acetate and formic acid (15:5:1) as the mobile phase. Apply separately 4 μl each of the tincture and the reference drug solution to the plate. After developing and removal of the plate, dry in air. The spots in the chromatogram obtained with the test solution correspond in position and colour to the spots in the chromatogram obtained with the reference drug solution, and examine under ultraviolet light at 365 nm, the spots show the same fluorescent colour.

Relative density 0.84-0.90 (Appendix Ⅶ A).

Ethanol content 70 per cent-75 per cent (Appendix Ⅸ M).

Other requirements Comply with the general requirements for tinctures (Appendix Ⅰ N).

Assay Carry out the method for high performance liquid chromatography (Appendix Ⅵ D).

Chromatographic system and system suitability Use octadecylsilane bonded silica gel as the stationary phase and a mixture of methanol and 0.1% solution of phosphoric acid (85:15) as the mobile phase. As detector a spectrophotometer set at 254 nm. The number of theoretical plates of the column is not less than 2000, calculated with the reference to the peak of emodin.

Reference solution Weigh accurately a quantity of emodin CRS, dissolve in dehydrated ethanol to produce a solution containing 10 μg per ml.

Test solution Measure accurately 2 ml of the tincture to a evaporating dish, add 1 g of silica gel (60-160 mesh), evaporate to dryness on a warm water bath. Apply to a column packed with silica gel (2 g, 17 mm in internal diameter), elute in vacuum with 90 ml of a mixture of petroleum ether (60-90℃), formate acetate and formic acid (100:100:2), collect the eluate to a 100 ml volumetric flask, dilute with the same mixture to the volume and mix well.

Procedure Inject accurately 10 μl of each of the test solution and the reference solution into the column and calculate the content.

It contains not less than 0.35 mg per ml of emodin ($C_{15}H_{10}O_5$), referred to Rhizoma et Radix Polygoni Cuspidati.

Action To remove *heat* and *dampness*, clear *heat* to reduce swelling, and astringe to kill pain.

Indications First-degree burn or second-degree burn of various reasons.

Usage and dosage For external use, spray it onto the cleaned wound surface, no dressing 3-4 times a day.

Strength (1) 50 ml per bottle (2) 100 ml per bottle

Storage Protected from light, preserve in tightly closed containers, stored in a cool and dark place.

Shayao
(痧药)

Shayao Pills

Ingredients Flos Caryophylli 21 g; Rhizoma Atractylodis 110 g; Rhizoma Gastrodiae 126 g; Herba Ephedrae 126 g; Radix et Rhizoma Rhei 210 g; Radix et Rhizoma Glycyrrhizae 84 g; Borneolum Syntheticum 0.5 g; Moschus 10.5 g; Venenum Bufonis (processed) 63 g; Realgar 126 g; Cinnabaris 126 g.

Procedure Levigate Realgar and Cinnabaris to very fine powders respectively. Pulverize Flos Caryophylli, Rhizoma Atractylodis, Rhizoma Gastrodiae, Herba Ephedrae, Radix et Rhizoma Rhei and Radix et Rhizoma Glycyrrhizae to fine powder. Grind Moschus, Venenum Bufonis and Borneolum Syntheticum to fine powder, mix with the above powders (except Cinnabaris), sift, mix thoroughly. Make pills with water and dry at a lower temperature, coat with Cinnabaris powder, and polish.

Description Vermilion luminous watered pills with dark yellow to yellowish-brown core; odour, aromatic; taste, sweet, bitter and numb.

Identification (1) Microscopical: Tissue fragments of gelatinized polysaccharides showing a brown or pale brownish-purple colour with iodine solution. Clusters of calcium oxalate fine, 7-11 μm in diameter, occurring in parenchymatous cells, often arranged in rows. Clusters of calcium oxalate large, 60-140 μm in diameter. Stomata characteristic, guard cells dumbbell-like in lateral view. Fibre bundles surrounded by parenchymatous cells containing prisms of calcium oxalate, forming crystal fibres. Amorphous masses pale yellowish-brown, embeded with fine prisms. Irregular fragments golden or orange-yellow, lustrous. Irregular fragments pale brown.

(2) Grind well 0.4 g of the pills, add 1 ml of concentrated ammonia TS and 15 ml of ether, stopper closely and stand for over night. Ultrasonicate for 15 minutes, add 2 ml of solution of hydrochloric acid in ethanol (1→20), mix well, filter, and evaporate the filtrate to dryness on a water bath. Dissolve the residue in 1 ml of methanol as the test solution. Dissolve ephedrine hydrochloride CRS in methanol to produce a solution containing 0.5 mg per ml as the reference solution. Carry out the method for thin layer chromatography (Appendix Ⅵ B), using silica gel G as the coating substance, and a mixture of chloroform, methanol, and concentrated ammonia TS (20 : 3.5 : 0.2) as the mobile phase. Apply separately 3 μl of each of the test solution and the reference solution to the plate. After developing and removal of the plate, dry in air, and spray with ninhydrin TS, heat at 105℃ to the spots clear. The spot in the chromatogram obtained with the test solution corresponds in position and colour to the spot in the chromatogram obtained with the reference solution.

(3) Grind well 0.4 g of the pills, add 10 ml of ethanol, heat under reflux for 30 minutes, filter, and evaporate the filtrate to dryness on a water bath. Dissolve the residue in 2 ml of ethanol as the test solution. Prepare a solution of 20 mg of Venenum Bufonis reference drug in the same manner as the reference drug solution. Dissolve bufogenin CRS and cinobufagin CRS in methanol to produce two solutions each containing 1 mg per ml as the reference solutions. Carry out the method for thin layer chromatography (Appendix Ⅵ B), using silica gel G as the coating substance and a mixture of cyclohexane, chloroform, and acetone (4 : 3 : 3) as the mobile phase. Apply separately 3 μl each of the test solution and the reference drug solution, and 2 μl of each of the reference solutions to the plate. After developing and removal of the plate, dry in air, and spray with 10% sulfuric acid in ethanol, and heat at 105℃ to the spots clear. The spots in the chromatogram obtained with the test solution correspond in position and colour to the spots in the chromatogram obtained with the reference drug solution and the reference solutions.

(4) Grind well 5 g of the pills, and 10 ml of ether, ultrasonicate for 5 minutes, filter, and use the filtrate as the test solution. Prepare a solution of 0.2 g of Rhizoma Atractylodis reference drug in the same manner as the reference drug solution. Carry out the method for thin layer chromatography (Appendix Ⅵ B), using silica gel G as the coating substance and petrol ether (60-90℃) as the mobile phase. Apply separately 5 μl of each of the test solution and the reference solution to the plate. After developing and removal of the plate, dry in air, and spray with 5% p-dimethylaminobenzaldehyde in 10% sulfuric acid in ethand, and heat to the spots clear. The spots in the chromatogram obtained with the test solution correspond in position and colour to the spots in the chromatogram obtained with the reference drug solution.

Other requirements Comply with the general requirements for pills (Appendix Ⅰ A).

Assay Carry out the method for high performance liquid chromatography (Appendix Ⅵ D).

Chromatographic system and system suitability Use octadecylsilane bonded silica gel as the stationary phase, and a mixture of methanol and 0.1% solution of phosphoric acid (78:22) as the mobile phase. As detector a spectrophotometer set at 254 nm. The number of theoretical plates of the column is not less than 3000, calculated with the reference to the peak of emodin.

Reference solution Weigh accurately a quantity of emodin CRS and chrysophanol CRS, dissolve in methanol to produce two solutions each containing emodin 10 μg per ml and 25 μg chrysophanol per ml.

Test solution Weigh accurately 1 g of pills, obtained under the test of weight variation, pulverized to fine powder, in a stoppered conical flask, add accurately 25 ml of ethanol, stopper closely and weigh. Heat under reflux on a water bath for 1 hour, cool, weigh accurately again, replenish the lost weight with ethanol, mix well and filter. Measure accurately 20 ml of the successive filtrate, to a grounded-bottom flask, evaporate the solution to dryness, dissolve the residue in 20 ml of the mixture of 30% solution of ethanol and hydrochloric acid (10:1), heat under reflux for 1 hour, cool immediately, extracted with four 20-ml quantities of dichloride methane, combine the dichloride methane extracts, recover the dichloride methane to dryness, dissolve the residue in methanol and transfer to a 20 ml volumetric flask, add methanol to volume, mix well, and filter. Discard the initial filtrate, and use the successive filtrate as the test solution.

Procedure Inject accurately 10 μl of each of the reference solutions and the test solution into the column respectively and calculate the content.

It contains not less than 0.67 mg of the total amount of emodin ($C_{15}H_{10}O_5$) and chrysophanol ($C_{15}H_{10}O_4$) per pill, referred to Radix et Rhizoma Rhei.

Action To expel summer-heat and relieve *toxicity*, and expel pathological factors and induce resuscitation.

Indications Sudden constriction in the chest and terribly upset, irritability, abdominal pain, vomiting, diarrhea,

lockjaw and cold limbs due to taking too much cold drinks and affliction from *dampness* in summer.

Usage and dosage 10-15 pills, once a day; appropriate reduction for children or follow the physician's advice. For external use, grind appropriate quantity into fine powder and insufflate into the nostrils for sneezing.

Precaution Avoid overdosage; it is forbidden to prescribe to pregnant women.

Strength 1 g per 33 pills

Storage Preserve in tightly closed containers.

Shedan Chenpi San
(蛇胆陈皮散)

Shedan Chenpi Powder

Ingredients Fel Serpentis Liquidum 100 g; Pericarpium Citri Reticulate (steamed) 600 g.

Procedure Pulverize Pericarpium Citri Reticulatae to fine powder, and mix well with Fel Serpentis Liquidum, dry and pulverize, and sift.

Description A yellowish-brown to reddish-brown powder; odour, slightly aromatic; taste, sweet, pungent and slightly bitter.

Identification (1) Microscopical: Prisms of calcium oxalate abundant in parenchyma.
(2) Warm 1.5 g of the powder in 5 ml of ethanol for 1 hour with constant shaking, filter, use the filtrate as the test solution. Dissolve Fel Serpentis Liquidum reference drug in ethanol to prepare a solution containing 5 mg per ml as the reference drug solution. Dissolve sodium taurocholate CRS in ethanol to produce a solution containing 0.5 mg per ml as the reference solution. Carry out the method for thin layer chromatography (Appendix Ⅵ B), using silica gel G as the coating substance and a mixture of isopentanol, glacial acetic acid and water (9 : 3 : 1) as the mobile phase. Apply separately 3 μl of each of the three solutions to the plate. After developing and removal of the plate, dry in air, spray with 10% sulfuric acid in ethanol, heat at 105℃ to the spots clear and examine under ultraviolet light at 365 nm. The fluorescent spots in the chromatogram obtained with the test solution correspond in position and colour to the spots in the chromatogram obtained with the reference drug solution and the reference solution.
(3) Prepare a solution of 1 g of Pericarpium Citri Reticulatae reference drug in the same manner, as the preparation of test solution described under Identification (2), as the reference drug solution. Dissolve hesperidin CRS in methanol to prepare a saturated solution as the reference solution. Carry out the method for thin layer chromatography (Appendix Ⅵ B), using silica gel G mixed with 0.5% sodium hydroxide as the coating substance and a mixture of ethyl acetate, methanol and water (100 : 17 : 13) as the mobile phase. Apply separately to the plate 2 μl of each of the reference drug solution, the reference solution and the test solution obtained under Identification test (2). After developing to a distance of 3 cm, remove the plate, dry in air. Using the upper layer of a mixture of toluene, ethyl acetate, formic acid and water (20:10:1:1) as the mobile phase. Develope to 8 cm and remove the plate, dry in air, spray with 1% aluminium chloride in methanol, examine under ultraviolet light at 365 nm. The fluorescent spots in the chromatogram obtained with the test solution correspond in position and colour to the spots in the chromatograms obtained with the reference drug solution and the reference solution.

Other requirements Comply with the general requirements for powders (Appendix Ⅰ B).

Action To regulate *qi* flow and resolve phlegm, and expel *wind* and harmonize the stomach.

Indications Coughing and vomiting due to block of the lung by phlegm and failure of *stomach-qi* to descend.

Usage and dosage 0.3-0.6 g, 2-3 times a day.

Strength (1) 0.3 g per bottle
(2) 0.6 g per bottle

Storage Preserve in tightly closed containers.

Shedan Chuanbei San
(蛇胆川贝散)

Shedan Chuanbei Powder

Ingredients Fel Serpentis Liquidum 100 g; Bulbus Fritillariae Cirrhosae 600 g.

Procedure Pulverize Bulbus Fritillariae Cirrhosae to fine powder, mix thoroughly with Fel Serpentis Liquidum, dry, pulverize, and sift.

Description A pale yellow to pale brownish-yellow powder; taste, sweet, slightly bitter.

Identification (1) Microscopical: Starch granules broadly ovoid or conchoidal, 40-64 μm in diameter, hilum short cleft, V-shaped or U-shaped, striations visible.
(2) To 3 g of the powder add 20 ml of a mixture of chloroform and ethanol (7 : 3), shake thoroughly, heat warmly for 20 minutes. Shake constantly, filter and evaporate the filtrate to dryness. Dissolve the residue in 2 ml of ethanol as the test solution. Dissolve Fel Serpentis Liquidum reference drug in ethanol to prepare a solution containing 5 mg per ml as the reference drug solution. Dissolve sodium taurocholate CRS in ethanol to prepare a solution containing 0.5 mg per ml as the reference solution. Carry out the method for thin layer chromatography (Appendix Ⅵ B), using silica gel G as the coating substance and a mixture of isopentanol, glacial acetic acid and water (9:3:1) as the mobile phase. Apply separately 5 μl of each of the three solutions to the plate. After developing and removal of the plate, dry in air, spray with 10% sulfuric acid in ethanol, heat at 105℃ to the spots clear. Examine under ultraviolet light at 365 nm, the fluorescent spots in chromatogram obtained with the test solution correspond in position and colour to the spots in the chromatograms obtained with the reference drug solution and the reference solution.
(3) Heat under reflux the residue obtained under Identification (2), with 20 ml of chloroform and 5 ml of concentrated ammonia TS for 30 minutes, allow to cool, filter and evaporate the filtrate to dryness. Dissolve the residue in 1 ml of methanol as the test solution. Prepare a solution of 3 g of Bulbus Fritillariae Cirrhosae reference drug in the same manner as the reference drug solution. Carry out the method for thin layer chromatography (Appendix Ⅵ B), using silica gel G mixed with sodium caboxymethylcellulose as the coating substance and a mixture of *n*-hexane, ethyl acetate and diethylamine (12 : 10 : 1) as the mobile phase. Apply separately in stripe 20 μl of each of the two solutions to the plate. After developing and removal of the plate, dry in air, spray with dilute potassium iodobismuthate TS and sodium nitrite TS successively. The stripes in chromatogram obtained with the test solution correspond in position and colour to the stripes in the chromatogram obtained with the

reference drug solution.

Other requirements Comply with the general requirements for powders (Appendix Ⅰ B).

Action To clear the lung to relieve coughing and eliminate phlegm.

Indications Coughing with expectoration of much phlegm due to *lung-heat*.

Usage and dosage 0.3-0.6 g, 2-3 times a day.

Strength (1) 0.3 g per bottle (2) 0.6 g per bottle

Storage Preserve in tightly closed containers.

Shengmai Yin
(生脉饮)

Shengmai Yin Oral Liquid

Ingredients Radix et Rhizoma Ginseng Rubra 100 g; Radix Ophiopogonis 200 g; Fructus Schisandrae Chinensis 100 g.

Procedure Pulverize the above three ingredients to coarse powder. Macerate in 65% ethanol for 24 hours and carry out the percolation method described under the liquid extract and extract (Appendix Ⅰ O). Collect about 4500 ml of percolate and concentrate to about 250 ml in vacuum. Allow to cool, dilute with 400 ml of water and filter. Add 300 ml of 60% syrup and a quantity of preservative, adjust pH value to the specified range, and make up to 1000 ml. Stir thoroughly, allow it to stand, filter, pack and sterilize.

Description A clear, yellowish-brown to reddish-brown liquid, slightly turbid on long standing; odour, aromatic; taste, sour, sweet and slightly bitter.

Identification (1) Transfer 20 ml to a separator and extract with 20 ml of *n*-butanol. Evaporate the extract to dryness, dissolve the residue in 15 ml of a mixture of sulfuric acid in 45% ethanol (7→100) and heat under reflux for 1 hour. Evaporate ethanol and extract with 10 ml of chloroform. Separate the chloroform layer, wash with water to pH 7 and dehydrate with anhydrous sodium sulfate, filter. Concentrate the filtrate to about 1 ml as the test solution. Dissolve panaxadiol CRS and panaxatriol CRS in dehydrated ethanol to produce a mixture containing 1 mg of each per ml as the reference solution. Carry out the method for thin layer chromatography (Appendix Ⅵ B), using silica gel G as the coating substance and a mixture of cyclohexane and acetone (2∶1) as the mobile phase. Apply separately to the plate 10 μl each of the two solutions. After developing and removal of the plate, dry in air, spray with sulfuric acid in methanol (1→2), heat at 105℃ for about 10 minutes and examine under ultraviolet light at 365 nm. The fluorescent spots in the chromatogram obtained with the test solution correspond in position and colour to the spots in the chromatogram obtained with the reference solution.

(2) To 10 ml, add 0.5 ml of hydrochloric acid and 1 ml of water, boil for 5 minutes, and cool. Extract under shaking with 20 ml of chloroform, separate the chloroform extracts, and evaporate to 1 ml as the test solution. To 1 g of Radix Ophiopogonis reference drug add 20 ml of water, decoct for 10 minutes, and filter. To the filtrate add 0.5 ml of hydrochloric acid, prepare a solution in the same manner as described above as the reference drug solution. Carry out the method for thin layer chromatography (Appendix Ⅵ B), using silica gel G as the coating substance and a mixture of chloroform and acetone (4∶1) as the mobile phase. Apply separately 5 μl of each of the two solutions to the plate. After developing and removal of the plate, dry in air. Spray with 10% sulfuric acid in ethanol and heat at 100℃ to the spots clear. The major spots in the chromatogram obtained with the test solution correspond in position and colour to the spots in the chromatogram obtained with the reference drug solution.

Relative density Not less than 1.08 (Appendix Ⅶ A).

pH value 4.5-7.0 (Appendix Ⅶ G).

Other requirements Comply with the general requirements for mixtures. (Appendix Ⅰ J).

Action To replenish *qi* and restore normal pulse beating, and nourish *yin* to promote the production of body fluids.

Indications Palpitation, shortness of breath, faint pulse and spontaneous sweating due to a deficiency of *qi* and *yin*.

Usage and dosage 10 ml, 3 times a day.

Strength 10 ml per phial

Storage Preserve in tightly closed containers, stored in a cool and dark place.

Shengxue Wan
(生血丸)

Shengxue Pills

Ingredients Cornu Cervi Pantotrichum; Cortex Phellodendri; Rhizoma Dioscoreae; Rhizoma Atractylodis Macrocephalae (stir-baked); Ramulus Mori; Semen Lablab Album (stir-baked); Fructus Oryzae Germinatus; Placenta Hominis.

Procedure Place Cornu Cervi Pantotrichum and Placenta Hominis in a container, add 150 g of yellow rice wine, stopper tightly, stew until wine being absorbed in a pressure tank or heating the container in boiling water, and dry. Pulverize to fine powder with the other six ingredients, stir thoroughly and sift. To each 100 g of the powder add 50-70 g of refined honey and a quantity of water to make pills and dry.

Description Yellowish-brown to dark brown water-honeyed pills; taste, slightly bitter.

Identification (1) Microscopical: Needle crystals of calcium oxalate fine, 10-32 μm in length, irregularly filling in parenchymatous cells. Fibre bundles bright yellow, surrounded by cells containing prisms of calcium oxalate, forming crystal fibres; walls of the crystaled-cells thickened and lignified. Calcium oxalate filling in mucilage cells, 80-240 μm long. Needle crystals 2-5 μm in diameter. Testa palisade cells 80-213 μm long, 5-26 μm wide. Fibres pale yellow or colourless, very long, 8-23 μm in diameter; walls thickened and non-lignified; lumina very fine.

(2) Macerate 2 g of the pills, pulverized to pieces, in 20 ml of ethanol, for 4 hours, filter, used the filtrate as the test solution. Dissolve 4 mg of berberine hydrochloride CRS in 10 ml of ethanol as the reference solution. Carry out the method for thin layer chromatography (Appendix Ⅵ B), using high performance silica gel G as the coating substance and a mixture of ethyl acetate, dehydrated ethanol and formic acid (7∶1∶2) as the mobile phase. Apply separately 1-2 μl of each of the test solution and the reference solution to the plate. After developing and removal of the plate, dry in air. Examine under ultraviolet light at 365 nm. The fluorescent spot in the chromatogram obtained with the test solution corresponds in position and colour to the spot in the chromatogram obtained with the reference solution.

Other requirements Comply with the general requirements for pills (Appendix Ⅰ A).

Assay Carry out the method for high performance liquid chromatography (Appendix Ⅵ D).

Chromatographic system and system suitability Use octadecylsilane bonded silica gel as the stationary phase, and a mixture of acetonitrile and 0.05 mol/L solution of sodium dihydrogen phosphate (43 : 57), added 1.7 g of sodium dodecylsulphate per 1000 ml, as the mobile phase. As detector a spectrophotometer set at 345 nm. The number of theoretical plates of the column is not less than 6000, calculated with the reference to the peak of berberine hydrochloride.

Reference solution Weigh accurately a quantity of berberine hydrochloride CRS, dissolve in methanol to produce a solution containing 20 μg per ml.

Test solution Pulverize the pills to powder, and weigh accurately 3 g of the powder in a Soxhlet's extractor, add 40 ml of a mixture of methanol and hydrochloric acid (100:1), macerate over night, add a quantity of methanol appropriately, and heat under reflux until the extract is colourless. Cool, concentrate the methanol extracts and transfer to a 50 ml volumetric flask, add methanol to volume, mix well and filter. Use the successive filtrate as the test solution.

Procedure Inject accurately 10 μl of each of the reference solution and the test solution into the column respectively and calculate the content.

It contains not less than 0.20 mg of berberine hydrochloride ($C_{20}H_{18}ClNO_4$) per gram, referred to Cortex Phellodendri Amurensin.

Action To reinforce the kidney and spleen, and replenish *essence* and nourish blood.

Indications Sallow complexion and emaciation, tiredness and lassitude, dizziness, poor appetite and loose stools due to deficiency in the spleen and kidney; panhematopenia and aplastic anemia caused by radiotherapy or chemotherapy with above symptoms.

Usage and dosage 5 g, 3 times a day, appropriate reduction of the dosage for children.

Precaution Be cautious about those who have *yin* deficiency and *heat*, and red tongue with scanty coating.

Strength 5 g per bottle

Storage Preserve in tightly closed containers.

Shenjing Zhike Wan
(参精止渴丸)

Shenjing Zhike Pills

Ingredients Radix et Rhizoma Ginseng Rubra; Radix Astragali; Rhizoma Polygonati; Poria; Rhizoma Atractylodis Macrocephalae; Radix Puerariae Lobatae; Fructus Schisandrae Chinensis seu Fructus Schisandrae Sphenantherae; Rhizoma Coptidis; Radix et Rhizoma Rhei; Radix et Rhizoma Glycyrrhizae.

Procedure Pulverize the above ingredients to fine powder, sift and mix well. Use 20% peach glue as the adhesive, make pills with 75% ethanol, dry, coat with the powder of Radix Rehmanniae charcoal and polish the pills.

Description Black lustrous watered pills with brownish-yellow colour core; odour, aromatic; taste, slightly bitter.

Identification (1) Microscopical: Irregular branched masses colourless, dissolved in chloral hydrate TS; hyphae colourless or pale brown, 4-6 μm in diameter. Clusters of calcium oxalate big, 60-140 μm in diameter. Fibre bundles bright yellow, walls relatively thickened, with obvious pits. Fibers in bundles or scattered, thick-walled with longitudinal fissures on the surface, both ends often broken to broom like or slightly truncated. Stone cells of epidermis of testa pale yellowish-brown, subpolygonal in surface view, walls relatively thickened, with fine and close pit-canals, lumina containing dark brown substances.

(2) Heat under reflux 5 g of the pills with 20 ml of methanol for 15 minutes, filter and concentrate the filtrate to about 1 ml as the test solution. Dissolve berberine hydrochloride CRS in methanol to prepare a solution containing 0.5 mg per ml as the reference solution. Carry out the method for thin layer chromatography (Appendix Ⅵ B), using silica gel G as the coating substance and a mixture of benzene, ethyl acetate, isopropanol, methanol and concentrated ammonia TS (12 : 6 : 3 : 3 : 1) as the mobile phase. Apply separately 1 μl of each of the two solutions to the plate. After developing in a chamber pre-equilibrated with ammonia vapour and removal of the plate, dry in air and examine under ultraviolet light at 365 nm. The fluorescent spot in the chromatogram obtained with the test solution corresponds in position and colour to the spot in the chromatogram obtained with the reference solution.

(3) Triturate 10 g of pills to fine powder, ultrasonicate with 40 ml of ethyl acetate for 30 minutes, filter. Evaporate the filtrate to dryness and dissolve the residue in 1 ml of methanol as the test solution. Dissolve a quantity of puerarin CRS in dehydrated ethanol to prepare a solution containing 1 mg per ml as the reference solution. Carry out the method for thin layer chromatography (Appendix Ⅵ B), using silica gel mixed with sodium carboxymethylcellulose as the coating substance and a mixture of chloroform, methanol and water (28:10:1) as the mobile phase. Apply separately 10 μl of the test solution and 2 μl of the reference solution to the plate. After developing and removal of the plate, dry in air. Exposure to ammonia vapours for 15 minutes. Examine under ultraviolet light at 365 nm. The fluorescent spot in the chromatogram obtained with the test solution corresponds in position and colour to the spot in the chromatogram obtained with the reference solution.

(4) Triturate 15 g of pills to fine powder, ultrasonicate with 50 ml of methanol for 30 minutes, filter. Evaporate the filtrate to dryness and dissolve the residue in 10 ml of water, add 1 ml of hydrochloric acid and heat on the water bath for 30 minutes, cool immediately. Extract with two 10-ml quantities of ether, combine the ether extract, evaporate to dryness, dissolve the residue in 1 ml of ethyl acetate as the test solution. Prepare a solution of 1 g of Radix et Rhizoma Rhei reference drug in the same manner as the reference drug solution. Carry out the method for thin layer chromatography (Appendix Ⅵ B), using silica gel as the coating substance and the upper layer of a mixture of petroleum ether (30-60℃), ethyl formate and formic acid (15:5:1) as the mobile phase. Apply separately 5 μl of each of the test solution and the reference drug solution to the plate. After developing and removal of the plate, dry in air. Examine under ultraviolet light at 365 nm. The five orange fluorescent spots in the chromatogram obtained with the test solution correspond in position and colour to the spots in the chromatogram obtained with the reference drug solution. The colour of spots turns into red on exposure to ammonia vapour.

Other requirements Comply with the general requirements for pills (Appendix Ⅰ A).

Assay Carry out the method for high performance liquid chromatography (Appendix Ⅵ D).

Chromatographic system and system suitability Use octadecylsilane bonded silica gel as the stationary phase and a mixture of methanol and 0.025 mol/L solution of phosphoric acid (mix 1.7 ml of phosphoric acid and 1.8 ml of triethylamine and dilute to 1000 ml with water) (20:80) as the mobile phase. Column temperature set at 40℃. As detector a spectrophotometer set at 250 nm. The number of theoretical plates of the column is not less than 4000, calculated with the reference to the peak of puerarin.

Reference solution Dissolve a quantity of puerarin CRS, accurately weighed, in methanol to prepare a solution containing 15 μg per ml.

Test solution Triturate pills to fine powder, weigh accurately 1.1 g of the powder, to a Soxhlet's extractor, add a quantity of ether, heat under reflux for 1 hour. Discard the ether extract and expel remained in the residue; add a quantity of methanol, further heat under reflux for 3 hours. Transfer the extract, concentrated when necessary, to a 50 ml volumetric flask, dilute with methanol to the volume and mix thoroughly.

Procedures Inject accurately 5 μl of each of the reference solution and the test solution into the column, and calculate the content.

It contains not less than 0.50 mg of puerarin ($C_{21}H_{20}O_9$) per gram, referred to Radix Puerariae.

Action To replenish *qi* and nourish *yin*, and promote generation of body fluids to relieve thirst.

Indications Diabetes due to impairment of body fluids by internal *heat* and a deficiency of *qi* and blood, with manifestations of shortness of breath, lassitude, dry mouth and polydipsia, polyphagia, emaciation; diabetes mellitus type Ⅱ with above symptoms.

Usage and dosage 10 g, 2-3 times a day.

Strength 7 g per 100 pills

Storage Preserve in well closed containers.

Shenling Baizhu San
(参苓白术散)

Shenling Baizhu Powder

Ingredients Radix et Rhizoma Ginseng 100 g; Poria 100 g; Rhizoma Atractylodis Macrocephalae (stir-baked) 100 g; Rhizoma Dioscoreae 100 g; Semen Lablab Album (stir-baked) 75 g; Semen Nelumbinis 50 g; Semen Coicis (stir-baked) 50 g; Fructus Amomi 50 g; Radix Platycodonis 50 g; Radix et Rhizoma Glycyrrhizae 100 g.

Procedure Pulverize the above ten ingredients to fine powder, sift, and mix well.

Description Yellow to greyish-yellow powder; odour, aromatic; taste, sweet.

Identification (1) Microscopical: Irregular branched masses colourless, dissolved in chloral hydrate TS; hyphae colourless or pale brown, 4-6 μm in diameter. Clusters of calcium oxalate 20-68 μm in diameter, with acute angles. Needles of calcium oxalate minute, 10-32 μm long, irregularly filling in parenchymatous cells. Raphides of calcium oxalate occurring in mucilage cells, 80-240 μm long, needles 2-8 μm in diameter. Fibre bundles surrounded by parenchymatous cells containing prisms of calcium oxalate, forming crystal fibres. cells of pigment layer yellowish-brown or reddish-brown, subrectangle, subrounded or subpolygonal in surface view. Palisade cells of testa 80-150 μm long. sclerenchymators cells of endotesta yellowish-brown or brownish-red, subpolygonal in surface view, walls thickened, lumina containing silica bodies. Anastomosing laticiferous tubes 14-25 μm in diameter, containing pale yellow granules.

(2) Heat under reflux 4.5 g of the powder with 40 ml of chloroform on a water bath for 1 hour, filter, discard the filtrate. Heat under reflux the residue with 50 ml of methanol on a water bath for 1 hour, filter, evaporate the filtrate to dryness, dissolve the residue in 5 ml of methanol. Apply the solution to a column (1-1.5 cm in inner diameter) packed with neutral aluminium oxide (100-120 mesh, 15 g), elute with 150 ml of 40% methanol. Collect the eluate, evaporate to dryness, dissolve the residue in 30 ml of water, extract with two 25-ml quantities of *n*-butanol saturated with water. Combine the extracts, wash with three 20-ml quantities of water, evaporate to dryness, dissolve the residue in 0.5 ml of methanol as the test solution. Prepare two solutions of each of 1 g Radix et Rhizoma Ginseng reference drug and Radix et Rhizoma Glycyrrhizae reference drug in the same manner as the reference drug solutions. Carry out the method for thin layer chromatography (Appendix Ⅵ B), using silica gel G as the coating substance and the lower layer of a mixture of chloroform, ethyl acetate, methanol and water (15:40:22:10, standing below 10℃) as the mobile phase. Apply separately 1 μl of each of the three solutions to the plate. After developing and removal of the plate, dry in air, spray with sulfuric acid in ethanol (1 → 10), heat at 105℃ for 5-10 minutes, and examine under ultraviolet light at 365 nm. The fluorescent spots in the chromatogram obtained with the test solution correspond in position and colour to the spots in the chromatogram obtained with the reference drug solutions.

Other requirements Comply with the general requirements for powders (Appendix Ⅰ B).

Action To reinforce the spleen and stomach, and replenish *lung-qi*.

Indications Poor appetite and loose stools, shortness of breath, cough and lassitude due to deficiency in the spleen and stomach.

Usage and dosage 6-9 g, 2-3 times a day.

Storage Preserve in tightly closed containers.

Shenqi Wuweizi Pian
(参芪五味子片)

Shengqi Wuweizi Tablets

Ingredients Fructus Schisandrae Sphenantherae 180 g; Radix Codonopsis 60 g; Radix Astragali 120 g; Semen Ziziphi Spinosae (stir-baked) 30 g.

Procedure Pulverize Radix Codonopsis and 60 g of Fructus Schisandrae Sphenantherae to fine powder, carry out the method of percolation as described under Liquid Extracts and Extracts (Appendix Ⅰ O), macerate Radix Astragali, Semen Ziziphi Spinosae and the remained portion of Fructus Schisandrae Sphenantherae with 45% ethanol, 70% ethanol and 60% ethanol for 24 hours, respectively, then percolate and collect the percolates, recover ethanol and combine the extracts, concentrate to a quantity and add the above fine powder and a quantity of excipient, mix thoroughly, make granules and make to 1000 tables, or coated with sugar.

Description Tablets or sugar coated tablets with dark-brown core; taste, slightly bitter.

Identification (1) Microscopical: Anastomosing laticiferous vessels 12-15 μm in diameter, containing fine granules. Epidermis stone cells of testa pale yellowish-brown, polygonal in surface view, walls relatively thickened, with fine and dense pit-canals, containing dark-brown contents.
(2) Grind 10 tablets or sugar coated tablets, removed the sugar coats, to fine powder, add 25 ml of chloroform, heat under reflux for 30 minutes, filter, evaporate to dryness, dissolve the residue in 1 ml of chloroform as the test solution. Prepare a solution of 1 g of Fructus Schisandrae Sphenantherae reference drug and 25 ml of chloroform in the same manner as the reference drug solution. Dissolve deoxyschizandrin CRS in chloroform to prepare a solution containing 1 mg per ml as the reference solution. Carry out the method for thin layer chromatography (Appendix Ⅵ B), using silica gel GF_{254} as the coating substance and the upper layer of a mixture of petroleum ether (30-60℃), ethyl formate and formic acid (15∶5∶1) as the mobile phase. Apply separately 2 μl of each of the three solutions to the plate. After developing and removal of the plate, dry in air and examine under ultraviolet light at 254 nm. The spots in the chromatogram obtained with the test solution correspond in position and colour to the spots in the chromatograms obtained with the reference drug solution and the reference solution.
(3) Grind 10 tablets or sugar coated tablets, removed the sugar coats, to fine powder, add 25 ml of methanol, heat under reflux for 1 hour, filter, and evaporate the filtrate to dryness. Add 10 ml of water to the residue, heat slightly to dissolve, extract the water solution by shaking with two 20-ml quantities of *n*-butanol saturated with water. Combine the *n*-butanol extract, wash the extract with two 20-ml quantities of ammonia TS, then wash with two 20-ml quantities of water, evaporate the *n*-butanol solution to dryness, and dissolve the residue in 0.5 ml of methanol as the test solution. Dissolve astragaloside Ⅳ CRS in methanol to prepare a solution containing 1 mg per ml as the reference solution. Carry out the method for thin layer chromatography (Appendix Ⅵ B), using silica gel G as the coating substance and the lower layer of a mixture of chloroform, methanol and water (13∶6∶1) (standing below 10℃) as the mobile phase. Apply separately 5 μl of each of the two solutions to the plate. After developing and removal of the plate, dry in air. Spray with 10% sulfuric acid in ethanol and heat at 105℃ to the spots clear. The spot in the chromatogram obtained with the test solution corresponds in position and colour to the spot in the chromatogram obtained with the reference solution. Examine under ultraviolet light at 365 nm, the fluorescent spot in the chromatogram obtained with the test solution corresponds in position and colour to the fluorescent spot in the chromatogram obtained with the reference solution.

Other requirements Comply with the general requirements for tablets (Appendix Ⅰ D)

Assay Carry out the method for high performance liquid chromatography (Appendix Ⅵ D).

Chromatographic system and system suitability Use octadecylsilane bonded silica gel as the stationary phase and a mixture of acetonitrile, water and acetic acid (64∶35∶1) as the mobile phase. As detector a spectrophotometer set at 249 nm. The number of theoretical plates of the column is not less than 4000, calculated with the reference to the peak of schisandrin A.

Reference solution Dissolve a quantity of schisandrin A CRS, accurately weighed, in methanol to prepare a solution containing 60 μg per ml as the reference solution.

Test solution Take 20 tablets, or sugar-coating tablets with coating removed, weigh accurately, pulverize to powder. Weigh accurately 1 g in a stopper conical flask, add accurately 25 ml of methanol, stopper tightly, and weigh. Ultrasonicate (power, 250 W; frequency, 50 kHz) for 20 minutes, cool, weigh again, replenish the loss of weight with methanol, mix well, centrifuge, and use the supernatant as the reference solution.

Procedure Inject accurately 10 μl of each of the reference solution and the test solution into the column, and calculate the content.
It contains not less than 0.25 mg of schisandrin A ($C_{24}H_{32}O_6$) per tablet, referred to Fructus schisandrae sphenantherae.

Action To invigorate the spleen and replenish *qi*, and tranquilize the *heart* to anchor the mind.

Indications Insomnia, dreamfulness, amnesia, lassitude, palpitation, shortness of breath and spontaneous sweating due to a deficiency of *spleen-qi* and *heart-blood*.

Usage and dosage 3-5 tablets, 3 times a day.

Strength 0.25 g per tablet

Storage Preserve in tightly closed containers.

Shenrong Baifeng Wan
(参茸白凤丸)

Shenrong Baifeng Pills

Ingredients Radix et Rhizoma Ginseng 8.2 g; Cornu Cervi Pantotrichum (processed with wine) 9.4 g; Radix Codonopsis (stir-baked) 40 g; Radix Angelicae Sinensis (steamed with wine) 39 g; Radix Rehmanniae Praeparata 77.5 g; Radix Astragali (processed with wine) 39 g; Radix Paeoniae Alba (processed with wine) 39 g; Rhizoma Chuanxiong (processed with wine) 30 g; Rhizoma Corydalis (processed) 23 g; Semen Trigonellae (processed with salt) 30 g; Radix Dipsaci (processed with wine) 30 g; Rhizoma Atractylodis Macrocephalae (processed) 30 g; Rhizoma Cyperi (processed) 31 g; Fructus Amomi 23 g; Herba Leonuri (processed with wine) 39 g; Radix Scutellariae (processed with wine) 30 g; Herba Taxilli (steamed) 21 g; Radix et Rhizoma Glycyrrhizae Praeparata Cum Melle 30 g.

Procedure Pulverize Cornu Cervi Pantotrichum to fine powder, Pulverize the other seventeen ingredients to fine powder, and mix with the above powder of Cornu Cervi Pantotrichum. To each 100 g of the powder add 35-45 g of refined honey or fructose syrup and a quantity of water to make pills and dry; or add 85-105 g of refined honey (or fructose syrup) to make big honeyed pills.

Description Brown to black water-honeyed pills or big honeyed pills.

Identification Microscopical: Palisade cells of seed coat 1 layer, pale brown or reddish-brown, occurring a light band. Stone cells subsquare, subrounded or irregular, lumina containing prisms of calcium oxalate or reddish-brown masses. Fibres pale yellow, fusiform, thick-walled, with fine pitcanals. Secretory cells subrounded, containing pale yellowish-brown or reddish-brown secretion, with adjacent cells arranged radiately. Sclerenchymatous cells of endotesta yellowish-brown or brownish-red, subpolygonal in surface view, with thickened walls, lumina containing silica bodies. Nonglandular hairs 1-3 celled when whole, slightly curved, with warty walls. Fibres in bundles or scattered throughout, thick-walled, with longitudinal fissures on the surface, both ends often broken to tassel-like, or slightly truncated.

Fibres bundles surrounded by parenchymatous cells containing prisms of calcium oxalate, forming crystal fibres. Parenchyma greyish-brown or blackish-brown, cells mostly wrinkled, containing brown nucleus-like substance. Unossified bone tissue pale grey or nearly colourless, uneven both on edges and surfaces, with irregular projecting masses, and belt striations vaguely observed.

Other requirements Comply with the general requirements for pills (Appendix Ⅰ A).

Action To replenish *qi* and nourish blood, and regulate menstruation and prevent miscarriage.

Indications Menstrual disorders, dysmenorrhea, or vaginal bleeding during pregnancy, or premature delivery due to a deficiency of both *qi* and blood.

Usage and dosage 6 g of water-honeyed pills, or 1 big honeyed pill, 1 time a day.

Precaution It is forbidden to prescribe to those with common cold and fever; pregnant woman should follow. doctor's advice

Strength 9.4 g per big honeyed pill

Storage Preserve in tightly closed containers.

Shenrong Baotai Wan
(参茸保胎丸)

Shenrong Baotai Pills

Ingredients Radix Codonopsis 66 g; Arillus Longan 20 g; Semen Cuscutae (processed with salt water) 33 g; Rhizoma Cyperi (processed with vinegar) 41 g; Poria 58 g; Rhizoma Dioscoreae 50 g; Folium Artemisiae Argyi (processed with vinegar) 41 g; Rhizoma Atractylodis Macrocephalae (stir-baked) 50 g; Radix Scutellariae 66 g; Radix Rehmanniae Praeparata 41 g; Radix Paeoniae Alba 41 g; Colla Corii Asini 41 g; Radix et Rhizoma Glycyrrhizae Praeparata Cum Melle 28 g; Radix Angelicae Sinensis 50 g; Herba Taxilli 41 g; Rhizoma Chuanxiong (processed with wine) 41 g; Rhizoma et Radix Notopterygii 20 g; Radix Dipsaci 41 g; Cornu Cervi Pantotrichum 20 g; Cortex Eucommiae 58 g; Bulbus Fritillariae Cirrhosae 20 g; Fructus Amomi 33 g; Exocarpium Citri Grandis 41 g.

Procedure Pulverize the twenty three ingredients to fine powder, sift, mix thoroughly. To each 100 g of the powder add 30-45 g of refined honey and a quantity of water to make pills and dry.

Description Dark brown water-honeyed pills; taste, sweet and slightly pungent.

Identification (1) Pulverize 2 g of the pills, add 10 ml of water, warm on a water bath for 10 minutes, cool and filter. Drip the filtrate on a filter paper, add one drop of ninhydrin TS, heat at 105℃ for about 2 minutes; a purple colour is produced.
(2) Pulverize 2 g of the pills, and 5 ml of ethanol, shake for 5 minutes, allow to stand for 20 minutes, and filter. To 1 ml of the filtrate, add a small quantity of magnesium powder and 1 ml of hydrochloric acid; an orange-red colour is produced.
(3) Pulverize 5 g of the pills, add 10 ml of ethanol, shake and stand for 10 minutes. Filter and use the filtrate as the test solution. To 0.1 g of Radix Angelicae Sinensis reference drug, add 5 ml of ethanol, shake and stand for 10 minutes. Filter and use the filtrate as the reference drug solution. Carry out the method for thin layer chromatography (Appendix Ⅵ B), using silica gel G mixed with sodium carboxymethylcellulose as the coating substance and a mixture of benzene and ethyl acetate (9∶1) as the mobile phase. Apply separately 5 μl of each of the two solutions to the plate. After developing and removal of the plate, dry in air and examine under ultraviolet light at 365 nm. The fluorescent spots in the chromatogram obtained with the test solution correspond in position and colour to the spots in the chromatogram obtained with the reference drug solution.

Other requirements Comply with the general requirements for pills (Appendix Ⅰ A).

Action To nourish the liver, kidney and blood to prevent miscarriage.

Indications Delicate in health, aching pain in the lower back and knees, distension and bearing-down sensation in the lower abdomen, vaginal bleeding during pregnancy or threatened abortion due to deficiency in the liver and kidney, and insufficient blood as well.

Usage and dosage 15 g, twice a day.

Storage Preserve in tightly closed containers.

Shenrong Guben Pian
(参茸固本片)

Shenrong Guben Tablets

Ingredients Radix Angelicae Sinensis 45 g; Rhizoma Dioscoreae (stir-baked) 60 g; Radix Paeoniae Alba (processed with wine) 37.5 g; Poria 60 g; Fructus Corni 60 g; Cortex Eucommiae (carbonized) 45 g; Fructus Lycii 45 g; Cortex Moutan 24 g; Sanguis Cornus Cervi Pantotrichi 0.75 g; Rhizoma Alismatis (processed with salt) 18 g; Radix Rehmanniae praeparata 120 g; Fructus Schisandrae Chinensis 22.5 g; Cornu Cervi Pantotrichum (removed from hairs) 2.5 g; Semen Cuscutae (processed with wine) 60 g; Radix et Rhizoma Ginseng Rubra 15 g.

Procedure Pulverize Cornu Cervi Pantotrichum, Sanguis Cornus Cervi Pantotrichum, Rhizoma Dioscoreae and Radix Angelicae Sinensis to fine powder, and sift. Decoct the other eleven ingredients with water for 2 times, 3 hours for the first time, and 2 hours for the second time. Combine the decoctions, filter and concentrate the filtrate to an extract. Mix the extract with the above powder, dry, pulverize, and sift. Add a quantity of excipients, mix thoroughly, make granules, dry, make to 1000 tablets and coat with sugar.

Description Sugar coated tablets with yellowish-brown core; taste, slightly bitter.

Identification (1) Microscopical: Parenchymatous cells fusiform, walls slightly thickened, with very fine and oblique crisscross striations. Raphides of calcium oxalate occurring in mucilage cells, 80-240 μm long, 2-8 μm in diameter. Unossified bone tissue pale grey or nearly colourless, uneven both on edges and surface, with irregular projecting masses and belt striations vaguely obseved.
(2) Triturate 20 tablets, removed the coats, to fine powder, add 20 ml of ether, ultrasonicate for 10 minutes, filter, evaporate the filtrate to dryness, and dissolve the residue in 1 ml of ethyl acetate as the test solution. Prepare a solution of 1 g of Radix Angelicae Sinensis reference drug and 20 ml of ether in the same manner as the reference drug solution. Carry out the method for thin layer chromatography (Appendix Ⅵ B), using silica gel G as the coating substance, and a mixture of cyclohexane and ethyl acetate (17∶3) as the mobile phase. Apply separately 2 μl of each

of the test solution and the reference drug solution to the plate. After developing and removal of the plate, dry in air. Examine under ultraviolet light at 365 nm. The fluorescent spots in the chromatogram obtained with the test solution correspond in position and colour to the spots in the chromatogram obtained with the reference drug solution.

Other requirements Comply with the general requirements for tablets (Appendix Ⅰ D).

Assay Carry out the method for high performance liquid chromatography (Appendix Ⅵ D).

Chromatographic system and system suitability Use octadecylsilane bonded silica gel as the stationary phase, and a mixture of acetonitrile and water (13∶87) as the mobile phase. As detector a spectrophotometer set at 230 nm. The number of theoretical plates of the column is not less than 2000, calculated with the reference to the peak of paeoniflorin.

Reference solution Weigh accurately a quantity of paeoniflorin CRS, dissolve in dilute ethanol TS to prepare a solution containing 0.2 mg per ml.

Test solution With 20 tablets, remove the sugar coats, pulverize to fine powder, and weigh accurately 3 g of the powder, place in a Soxhlet's extractor, add a quantity of ether, extract under reflux until the extract is colourless. Discard the ether solution, and evaporate the residue to dryness, add a quantity of methanol, heat under reflux until the extract is colourless. Evaporate the methanol extracts to dryness, dissolve the residue in 20 ml of water, apply to a column packed with D-101 macroporous resin (15 cm in height, 1.5 cm in inner diameter), elute separately with 50 ml of water and 2 ml of ammonia TS, then wash with water until the pH value of the eluate to 7, finally elute with ethanol, and collect 150 ml of ethanol eluate, and evaporate the eluate to dryness. Dissolve the residue in dilute ethanol TS, and transfer to a 10 ml volumetric flask, add dilute ethanol TS to volume, mix well and filter. Discard the initial filtrate, and use the successive filtrate as the test solution.

Procedure Inject accurately 5 μl of each of the reference solution and the test solution into the column respectively and calculate the content.

It contains not less than 0.10 mg of paeoniflorin ($C_{23}H_{28}O_{11}$) per tablet, referred to Radix Paeoniae Alba and Cortex Moutan.

Action To replenish *qi* and nourish blood.

Indications Weakness of the limbs, lusterless complexion, tinnitus and dizziness due to a deficiency of *qi* and blood.

Usage and dosage 5-6 tablets, 3 times a day.

Storage Preserve in tightly closed containers, protected from moisture.

Shensu Wan
(参苏丸)

Shensu Pills

Ingredients Radix Codonopsis 75 g; Folium Perillae 75 g; Radix Puerariae Lobatae 75 g; Radix Peucedani 75 g; Poria 75 g; Rhizoma Pinelliae (processed) 75 g; Pericarpium Citri Reticulatae 50 g; Fructus Aurantii (stir-baked) 50 g; Radix Platycodonis 50 g; Radix et Rhizoma Glycyrrhizae 50 g; Radix Aucklandiae 50 g.

Procedure Pulverize the above eleven ingredients to fine powder, sift and mix thoroughly. Decoct 30 g of Rhizoma Zingiberis Recens and 30 g of Fructus Jujubae with water in portions and filter. Make pills with the above powder and decoction, and dry.

Description Brown watered pills; odour, slight; taste, slightly bitter.

Identification (1) Microscopical: Irregular branched masses colourless, dissolved in chloral hydrate TS; hyphae colourless or pale brown, 4-6 μm in diameter. Raphides of calcium oxalate 32-144 μm long, occurring in mucilage cells or scattered fine. Anastomosing laticiferous tubes 14-25 μm in diameter, containing pale yellow granular substance. Stone cells subrhombic or polygonal with one end slightly sharp, walls relatively thick with few pits. Fibre bundles surrounded by parenchymatous cells containing prisms of calcium oxalate forming crystal fibres.

(2) Grind well 12 g of the pills, to a 500 ml ground-bottom flask, add 200 ml of water, connect to an apparatus for the determination of volatile oil. Add water through the top of the apparatus until the graduated tube is filled and overflows to the flask, then add 1.5 ml of petrol eum ether (60-90℃) and connect to the reflux condenser. Heat under reflux and keep boiling for 2 hours, cool, use petrol eum ether layer as the test solution. Prepare a solution of 1 g of Folium Perillae reference drug in the same manner as the reference drug solution. Carry out the method for thin layer chromatography (Appendix Ⅵ B), using silica gel G as the coating substance and the mixture of petrol eum ether (60-90℃) and ethyl acetate (17∶3) as the mobile phase. Apply separately 5 μl of the test solution and the reference solution to the plate. After developing and removal of the plate, dry in air, and spray with 1% vanillin in sulfuric acid and heat to the spots distinct. The spots in the chromatogram obtained with the test solution correspond in position and colour to the spots in the chromatogram obtained with the reference drug solution.

(3) Grind well 4 g of the pills, add 40 ml of 50% ethanol, heat under reflux for 1 hour, filter, and evaporate the filtrate to dryness on a water bath. Dissolve the residue in 20 ml of water, extract with three 10-ml quantities of ethyl acetate, combine ethyl acetate extracts, evaporate to dryness. Dissolve the residue in 1 ml of ethyl acetate as the test solution. Prepare a solution of 1 g of Radix Peucedani reference drug in the same manner as the reference drug solution. Carry out the method for thin layer chromatography (Appendix Ⅵ B), using silica gel G as the coating substance and the mixture of petrol eum ether (60-90℃) and ethyl acetate (3∶2) as the mobile phase. Apply separately 2 μl of each of the test solution and the reference solution to the plate. After developing and removal of the plate, dry in air, examine under ultraviolet light at 365 nm. The fluorescent spots in the chromatogram obtained with the test solution correspond in position and colour to the spots in the chromatogram obtained with the reference drug solution.

(4) To 7 g, triturate to powder, macerate with 25 ml of ether for 4 hours, shake frequently, filter, evaporate the filtrate to dryness, dissolve the residue in 1 ml of ethanol, and use the supernatant as the test solution. Prepare a solution of 0.5 g of Radix Aucklandiae reference drug and 10 ml of ether in the same manner as the reference drug solution. Carry out the method for thin layer chromatography (Appendix Ⅵ B), using silica gel G as the coating substance and a mixture of petroleum ether (60-90℃) and ethyl acetate (9∶1) as the mobile phase. Apply separately 2 μl of each of the above two solutions to the plate. After developing and removal of the plate, dry in air. Spray with 1% vanillin in sulfuric acid, heat at 105℃ to the spots clear. The two main spots in the chromatogram obtained with the test solution correspond in position and

colour to the spots in the chromatogram obtained with the reference drug solution.
(5) Triturate 4 g of the pills to powder, add 25 ml of methanol, ultrasonicate for 15 minutes, filter, evaporate the filtrate to dryness, dissolve the residue in 1 ml of methanol, filter and use the filtrate as the test solution. To 0.5 g of Pericarpium Citri Reticulatae reference drug add 5 ml of methanol, ultrasonicate for 15 minutes, filter and use the filtrate as the reference drug solution. Carry out the method for thin layer chromatography (Appendix Ⅵ B), using silica gel G mixed with sodium carbonmethylcellulose as the coating substance and a mixture of *n*-hexane and ethyl acetate (2∶3) as the mobile phase. Apply separately 1 μl of each of the above two solutions to the plate. After developing and removal of the plate, dry in air, examine under ultraviolet light at 365 nm. The fluorescent spots in the chromatogram obtained with the test solution correspond in position and colour to the spots in the chromatogram obtained with the reference drug solution.

Other requirements Comply with the general requirements for pills (Appendix Ⅰ A).

Assay Carry out the method for high performance liquid chromatography (Appendix Ⅵ D).

Chromatographic system and system suitability Use octadecylsilane bonded silica gel as the stationary phase, and a mixture of methanol and water (21∶79) as the mobile phase. As detector a spectrophotometer set at 250 nm. The number of theoretical plates of the column is not less than 2500, calculated with the reference to the peak of puerarin.

Reference solution Weigh accurately a quantity of puerarin CRS, dissolve in dilute ethanol TS to prepare a solution containing 80 μg per ml.

Test solution Pulverize the pills to fine powder, weigh accurately 2 g in a stopper conical flask, add accurately 25 ml of dilute ethanol TS, closely stopper and weigh. Ultrasonicate for 30 minutes (power, 250 W; frequency, 33 kHz), cool, weigh again, replenish the lost weight with dilute ethanol TS. Filter the supernatant, and use the successive filtrate as the test solution.

Procedure Inject accurately 10 μl of each of the reference solution and the test solution into the column respectively and calculate the content.
It contains not less than 0.30 mg of puerarin ($C_{21}H_{20}O_9$) per gram, referred to Radix Puerariae.

Action To replenish *qi* to release the exterior, and disperse *wind* and *cold*, and expel phlegm to relieve cough.

Indications Common cold due to affliction from external *wind-cold* in debilitated patients with manifestations of aversion to cold, fever, headache, stuffy nose, coughing with expectoration of profuse phlegm, constriction in the chest, vomiting, lassitude and shortness of breath.

Usage and dosage 6-9 g, 2-3 times a day.

Storage Preserve in tightly closed containers, protected from moisture.

Shexiang Baoxin Wan
(麝香保心丸)

Shexiang Baoxin Pills

Ingredients Moschus; Extractum Ginseng; Calculus Bovis Artifactus; Cortex Cinnamomi; Styrax, Venenum Bufonis; Borneolum Syntheticum.

Procedure Pulverize the six ingredients except Styrax to fine powder, make pills with Styrax and a quantity of white wine and dry.

Description Blackish-brown watered pills, lustrous; cut surface brownish-yellow; taste, bitter, pungent, cool and numb.

Identification (1) Pulverize 0.9 g of the pills, macerate in 40 ml of petroleum ether (30-60℃) for 30 minutes, shake constantly, discard the petroleum ether solution, evaporate the residue to dryness. Ultrasonicate the residue with 40 ml of chloroform for 20 minutes, filter, reserve drug residue for later use, evaporate the filtrate to dryness. Dissolve the residue in 0.5 ml of chloroform as the test solution. Dissolve bufogenin CRS in chloroform to prepare a solution containing 1 mg per ml as the reference solution. Carry out the method for thin layer chromatography (Appendix Ⅵ B), using silica gel G as the coating substance and a mixture of cyclohexane, chloroform and acetone (4∶3∶3) as the mobile phase. Apply separately 6 μl of the test solution and 2 μl of the reference solution to the plate. After developing and removal of the plate, dry in air, spray with 10% sulfuric acid in ethanol, and heat at 105℃ to the spots clear. The bluish-green spot in the chromatogram obtained with the test solution corresponds in position and colour to the spot in the chromatogram obtained with the reference solution; then examine under ultraviolet light at 365 nm, the pale greyish-yellow fluorescence spot in the chromatogram obtained with the test solution corresponds in position and colour to the spot in the chromatogram obtained with the reference solution.
(2) Evaporate the drug residue deserved under Identification (1) to dryness. Add 20 ml of *n*-butanol saturated with water, ultrasonicate for 30 minutes, filter, wash the filtrate with two 20-ml quantities of 0.5% solution of sodium hydroxide, then wash with water to neutral. Evaporate the *n*-butanol solution to dryness on a water bath, dissolve the residue in 0.5 ml of methanol as the test solution. Prepare a solution of 1 g of Radix et Rhizoma Ginseng reference drug in the same manner as the reference drug solution. Dissolve ginsenoside Rb_1 CRS, ginsenoside Re CRS, ginsenoside Rg_1 CRS in methanol to produce a mixture containing 2 mg of each per ml as the reference solution. Carry out the method for thin layer chromatography (Appendix Ⅵ B), using silica gel G as the coating substance and the lower layer of a mixture of chloroform, ethyl acetate, methanol and water (15∶40∶22∶10, standing below 10℃) as the mobile phase. Apply separately 1-2 μl of each of the three solutions to the plate. After developing and removal of the plate, dry in air immediately, spray with 10% sulfuric acid in ethanol, heat at 110℃ for several minutes to the spots clear, and examine in sunlight and under ultraviolet light at 365 nm, respectively. The spots or the fluorescent spots in the chromatogram obtained with the test solution correspond in position and colour to the spots in the chromatogram obtained with the reference drug solution. Three purplish-red spots in the chromatogram obtained with the test solution correspond in position and colour to the spots in the chromatogram obtained with the reference solution in sunlight. One yellow spot and two orange fluorescent spots in the chromatogram obtained with the test solution correspond in position and colour to the spots in the chromatogram obtained with the reference solution under ultraviolet light at 365 nm.
(3) To 2 g of the pills, pulverized to powder, add 5 ml of ether, ultrasonicate for 5 minutes, centrifuge, and use the supernatant as the test solution. Dissolve muscone CRS in ether to produce a solution containing 0.1 mg per ml as the reference solution. Carry out the method for gas

chromatography (Appendix Ⅵ E), using a 2 meters long column packed with a mixture of 1.64% polyethylene glycol (PEG)-20 M and 1.32% methyl polysiloxane (SE-30) as the stationary phase; maintain the column temperature at 180℃. Inject a quantity volume of the test solution and the reference solution, respectively, into the column, the retention time of the peaks obtained with the test solution and the reference solution corresponds with each other.

(4) Dissolve cinnamic acid CRS in ether to produce a solution containing 0.2 mg per ml as the reference solution. Carry out the method for thin layer chromatography (Appendix Ⅵ B), using silica gel GF_{254} as the coating substance and a mixture of petrol eum ether (30-60℃), *n*-hexane, methyl acetate and formic acid (10∶30∶15∶1) as the mobile phase. Apply separately 5 μl of each of the reference solution and the test solution obtained under Identification (3) to the plate. After developing and removal of the plate, dry in air, and examine under ultraviolet light at 254 nm. The spot in the chromatogram obtained with the test solution corresponds in position and colour to the spot in the chromatogram obtained with the reference solution.

(5) Add 5 ml of methanol to the dried residue reserved under Identification (3), ultrasonicate for 20 minutes, allow to stand, and use the supernatant as the test solution. Dissolve cholic acid CRS and deoxycholic acid CRS in ethanol to produce two solutions separately containing 0.5 mg per ml and 0.1 mg per ml as the reference solutions. Carry out the method for thin layer chromatography (Appendix Ⅵ B), using silica gel G as the coating substance and a mixture of chloroform, ether, and glacial acetic acid (2∶2∶1) as the mobile phase. Apply separately 3 μl each of the reference solutions and the test solution to the plate. After developing and removal of the plate, dry in air, spray with a 10% sulfuric acid in ethanol, and heat at 105℃ to spots clear. Examine under ultraviolet light at 365 nm. The fluorescent spots in the chromatogram obtained with the test solution correspond in position and colour to the spots in the chromatogram obtained with the reference solutions.

(6) To 0.5 g of the pills, pulverized to powder, add 10 ml of ethyl acetate, ultrasonicate for 5 minutes, centrifuge, and use the supernatant as the test solution. Dissolve a mixture of (±) borneol and (±) isoborneol CRS in ethyl acetate to produce a solution containing 3 mg per ml as the reference solution. Carry out the method for thin layer chromatography (Appendix Ⅵ B), using silica gel G as the coating substance and the mixture of toluene and acetone (9∶1) as the mobile phase. Apply separately to the plate 2 μl of each of the reference solution and the test solution. After developing and removal of the plate, dry in air, spray with 5% vanillin in sulfuric acid, and heat at 105℃ to spots clear. The spot in the chromatogram obtained with the test solution corresponds in position and colour to the spot in the chromatogram obtained with the reference solution.

Weight variation Carry out the method for test of weight variation under the general requirements for pills (Appendix Ⅰ A, method 1), using 10 pills, not more than ±15.0 per cent.

Disintegration test Not more than 15 minutes (Appendix Ⅰ A).

Other requirements Comply with the general requirements for pills (Appendix Ⅰ A).

Assay Carry out the method for high performance liquid chromatography (Appendix Ⅵ D).

Chromatographic system and system suitability Use octadecylsilane bonded silica gel as the stationary phase, and a mixture of acetonitrile and 0.5% solution of potassium dihydrogen phosphate (50∶50) (adjust the pH value to 3.2 with phosphoric acid) as the mobile phase. As detector a spectrophotometer set at 296 nm. The number of theoretical plates of the column is not less than 9000, calculated with the reference to the peak of cinobufagin.

Reference solution Weigh accurately a quantity of bufogenin CRS and cinobufagin CRS separately, dissolve with methanol, to produce two solutions each containing 50 μg per ml.

Test solution Weigh accurately 80 pills, pulverize to fine powder, and weigh accurately 0.5 g of the powder, place in a stopper conical flask, add accurately 10 ml of methanol, closely stopper and weigh. Ultrasonicate for 30 minutes (power, 250 W; frequency, 33 kHz), cool, weigh again, replenish the loss of weight with methanol, stir well and filter, and use the successive filtrate as the test solution.

Procedure Inject accurately 10 μl of each of the reference solutions and the test solution into the column respectively and calculate the content.

It contains not less than 18 μg of the total amount of bufogenin ($C_{24}H_{32}O_4$) and cinobufagin ($C_{26}H_{34}O_6$) per pill, referred to Venenum Bufonis.

Action To dredge meridians with aromatics warm in property, and replenish *qi* to reinforce the heart.

Indications Impeded flow of *yang-qi* in the chest due to stagnation of *qi* and blood with manifestations of fixed pain in the precardium; angina pectoris due to myocardial ischemia and myocardial infarction with above symptoms.

Usage and dosage 1-2 pills, 3 times a day, or taken during the attack.

Precaution Contraindicated for pregnant women.

Strength 22.5 mg per pill

Storage Preserve in tightly closed containers.

Shexiang Qutong Chaji (麝香祛痛搽剂)

Shexiang Qutong Liniment

Ingredients Moschus 0.33 g; Flos Carthami 1 g; Camphora 30 g; Radix Angelicae Pubescentis 1 g; Borneolum Syntheticum 20 g; Resina Draconis 0.33 g; Mentholum 10 g; Radix Rehmanniae 20 g; Radix et Rhizoma Notoginseng 0.33 g.

Procedure Macerate separately Moschus, Radix et Rhizoma Notoginseng and Flos Carthami with 10 ml of 50% ethanol in 3 portions, 7 days for each times, combine the extract and filter. Macerate Radix Rehmanniae with 100 ml of 50% ethanol in 3 portions, 7 days for each time, combine the extract and filter. Macerate separately Resina Draconis and Radix Angelicae Pubescentis with 10 ml of ethanol in 3 portions, 7 days for each time, combine the extract and filter. Dissolve Borneolum Syntheticum and Camphora in 100 ml of ethanol by stirring, add 700 ml of 50% ethanol, stir well, add the above extract, mix well. Dissolve Mentholum with a quantity of 50% ethanol, add to the above drug liquid, add 50% ethanol to total amount of 1000 ml, mix well, stand and filter.

Description A clear, orange colour liquid; odour, aromatic.

Identification Inject 1 μl of each of the reference solution and test solution prepared under Assay. Carry out the test

method under Assay, the retention times of the peaks in the chromatogram obtained with the test solution correspond to that of the peaks in the chromatogram obtained with the reference solutions.

Ethanol content 47 per cent-57 per cent (Appendix Ⅸ M).

Other requirements Comply with the general requirements for liniments (Appendix Ⅰ V).

Assay Carry out the method for gas chromatography(Appendix Ⅵ E).

Chromatographic system and system suitability Use a column packed with polyethylene, glycol (PEG)-20 M as the stationary phase (30 m in length 0.53 mm in inner diameter, film thickness 1.0 μm) and maintain the column temperature at 160℃. The number of theoretical plates of the column is not less than 12000, calculated with the reference of the peak of camphor.

Correction factor Dissolve a quantity of naphthalene, accurately weighed, in dehydrated ethanol to produce a solution containing 4 mg per ml as internal standard solution. Dissolve 6 mg of camphor, 2 mg of menthol, and 4 mg of the mixture of (±)-borneol and (±) isoborneol CRS, accurately weighed, in a 10 ml volumetric flask, add accurately 1 ml of internal standard solution, then dilute with dehydrated ethanol to volume, and mix well. Inject accurately 1 μl of the solution into column, calculate the correction factor.

Procedure Measure accurately 1 ml of the liniment in a 50 ml volumetric flask, add accurately 5 ml of internal standard solution, then dilute with dehydrated ethanol to volume, and mix well as the test solution. Inject accurately 1 μl of the test solution into the column and calculate the contents. The content of a mixture of (±)-borneol and (±) isoborneol is calculated with the total amount of (±)-borneol and (±)-borneol.
It contains 25.5-35.5 mg of camphor ($C_{10}H_{16}O$), 8.5-11.5 mg of menthol ($C_{10}H_{20}O$), and 17.0-23.0 mg of Borneolum Syntheticum per ml.

Action To promote blood circulation to expel stagnated blood, relax muscles and tendons, and reduce swelling to kill pain.

Indications Traumatic injuries with bruise and pain, accumulation of *wind-dampness* and arthralgia.

Usage and dosage For external use, apply it to the lesion for 5 to 10 minutes until there is a hot feeling, soaked with the medicine to the lesion in severe sprain of soft tissues or hemorrhage.

Precaution Be cautious about pregnant women and those with ethanol sensitivity.

Strength 56 ml per bottle

Storage Preserve in tightly closed containers and store below 30℃, protected from light.

Shexiang Qutong Qiwuji
麝香祛痛气雾剂
Shexiang Qutong Aerosol

Ingerdients Moschus 0.33 g; Flos Carthami 1 g; Camphora 30 g; Radix Angelicae Pubescentis 1 g; Borneolum syntheticum 20 g; Resina Draconis 0.33 g; Mentholum 10 g; Radix Rehmanniae 20 g; Radix et Rhizoma Notoginseng 0.33 g.

Procedure Macerate separately Moschus, Radix Et Rhizoma Notoginseng and Flos Carthami with 10 ml of 50% ethanol in 3 portions, respectively, 7 days for each times, combine the extracts and filter. Macerate Radix Rehmanniae with 100 ml of 50% ethanol in 3 portions, 7 days for each time, combine the extract and filter. Macerate separately Resina Draconis and Radix Angelicae Pubescentis with 10 ml of ethanol in 3 portions, 7 days for each time, combine the extracts and filter. Dissolve Borneolum Syntheticum and Camphora in 100 ml of ethanol by stirring, add 700 ml of 50% ethanol, stir well, add the above extracts, mix well. Dissolve Mentholum with a quantity of 50% ethanol, add into the above drug liquid, adjust the total volume to 1000 ml with 50% ethanol, mix well, stand and filter, pack, seal and add a quantity of the propellant.

Description A aerosol with non-metered-dose valve system; the drug liquid in the pressure-resistant container is a clear, orangish-red liquid with aromatic odour.

Identification Carry out the test method under Assay, the retention times of the peaks in the chromatogram obtained with the test solution correspond to that of the peaks in the chromatogram obtained with the reference solutions.

Ethanol content 47-57 per cent (Appendix Ⅸ M).

Delivery rate Not less than 0.8 g per second (Appendix Ⅰ Z).

Other requirements Comply with the general requirements for aerosols (Appendix Ⅰ Z).

Assay Carry out the method for gas chromatography (Appendix Ⅵ E).

Chromatographic system and system suitability Use a macrogol-20000 (PEG-20 M) fused quartz capillary column (0.53 mm in internal diameter, 30 meter long and 1.0 μm film thickness) as the stationary phase, maintain the column temperature at 160℃. The number of theoretical plates of the column is not less than 20000, calculated with reference to the peak of camphor

Correlation factor Dissolve a quantity of naphthalene, accurately weighed, in dehydrated ethanol to prepare a solution containing 4 mg per ml, as the internal standard solution. Dissolve 6 mg of camphor CRS, 2 mg of menthol CRS and 4 mg of the mixture of (±)-borneol and (±)-isoborneol CRS, accurately weighed, in the same 10 ml volumetric flask, add accurately 1 ml of the internal standard solution, dilute with dehydrated ethanol to volume, and mix well. Inject 1 μl of the solution into column, calculate the correction factor.

Procedure Remove the cover of the container, cool to 5℃. On the aluminum cover of the container punch a hole and insert an injection needle with a dry rubber tubing into the container (do not contact the surface of the liquid). The other end of the rubber tubing is inserted into water, allow the propellant to expel gently completely, remove the aluminum cover. Measure accurately 1 ml of the drug liquid, to a 50 ml volumetric flask, add accurately 5 ml of the internal standard solution, dilute with dehydrated ethanol to volume, mix well, as the test solution. Inject 1 μl of the test solution into column and calculate the contents.
It contains not less than 25.5 mg and no more than 34.5 mg of camphor ($C_{10}H_{16}O$) per ml. It contains not less than 8.5 mg and no more than 11.5 mg of menthol ($C_{10}H_{20}O$) per ml. It contains not less than 17.0 mg and no more than 23.0 mg of the mixture of (±)-borneol and (±)-isoborneol ($C_{10}H_{18}O$) per ml.

Action To promote blood circulation to expel stagnated blood, dredge meridians to reduce swelling and pain.

Indications Traumatic injuries with bruise and pain, accumulation of *wind-dampness* and arthralgia.

Usage and Dosage Fox external use, spray it to the lesion and rub for 5-10 minutes until there is a hot feeling on the 2-3 times a day; apply a cotton pad soaked the medicine to the lesion in severe sprain of soft tissues or hemorrhage.

Precaution Be cautious about pregnant women and those with ethanol sensitivity.

Strength 72 g of the content per container containing 56 ml of drug liquid

Storage Preserve in tightly closed containers, stored in a cool and dark place.

Shexiang Zhichuang Shuan (麝香痔疮栓)

Shexiang Zhichuang Suppositories

Ingredients Moschus; Margarita; Borneolum Syntheticum; Galamina; Radix et Rhizoma Notoginseng; Galla Chinensis; Calculus Bovis Artifactus; Extractum Belladonnae Liquidum.

Procedure Pulverize separately Moschus, Margarita, Borneolum Syntheticum, Galamina, Radix et Rhizoma Notoginseng and Galla Chinensis to fine powder. Mix Extractum Belladonnae Liquidum with a portion of Galamina fine powder, dry in oven, sift and mix well with the above fine powders. Heat a quantity of fatty glycerides to melt, mix at temperature of 42-45℃ with the above fine powder, stir well, pour into moulds and cool.

Description Grayish-yellow to brown bullet-shaped or torpedo-shaped suppositories; odour, aromatic.

Identification (1) To 5 suppositories, add 5 ml of water and 5 ml of 10% solution of sodium hydroxide, boil for 5 minutes, cool, stand and allow to precipitate, and take some precipitates for microscopical observation: Non-glandular hairs 1 to several-celled, some curved at the apex. Irregular fragments colourless or pale green, translucent, lustrous, sometimes fine and dense sinuose striations visible. Fragments of resin canal containing yellow secretions.

(2) To 3 suppositories, add 50 ml of 5% solution of sodium carbonate, warm on a water bath to melt, cool, allow to stand, and filter. Add dilute hydrochloric acid TS to adjust pH value to 1, extract by shaking with two 20-ml quantities of chloroform and combine the chloroform extracts. Evaporate the extract to dryness and dissolve the residue in 1 ml of ethanol as the test solution. Dissolve cholic acid CRS and hyodeoxycholic acid CRS in ethanol to produce a mixture containing 1 mg each per ml as the reference solution. Carry out the method for thin layer chromatography (Appendix Ⅵ B), using silica gel G as the coating substance and the upper layer of a mixture of *n*-hexane, ethyl acetate, methanol and acetic acid (20 : 25 : 3 : 2) as the mobile phase. Apply separately 5 μl of the test solution and 2 μl of the reference solution to the plate. After developing and removal of the plate, dry in air and spray with 10% phosphomolybdic acid in ethanol. Heat at 105℃ to the spots clear. The spots in the chromatogram obtained with the test solution correspond in position and colour to the spots in the chromatogram obtained with the reference solution.

Other requirements Comply with the general requirements for suppositories (Appendix Ⅰ W).

Assay Carry out the method for gas chromatography (Appendix Ⅵ E)

Chromatography system and system suitability Use 10% macrogol 20000 (PEG-20 M) as the stationary phase, maintain the column temperature at 115℃, the number of theoretical plates of the column is not less than 1500, calculated with the reference to the peak of naphthalene.

Correction factor Dissolve a quantity of naphthalene, accurately weighed, in cyclohexane to prepare a solution containing 20 mg per ml as the internal standard solution. Weigh accurately 45 mg of borneol CRS and isobornol CRS in a 10 ml volumetric flask, add accurately 2 ml of the internal standard solution, dilute with cyclohexane to volume, inject accurately 1 μl into the column, and calculate the correction factor.

Procedure Chip the suppositories, obtained under the test of weight variation, into pieces, mix well, weigh accurately 1 g in a stopper conical flask, add accurately 2 ml of the internal solution and 10 ml of cyclohexane, shake well, stopper tightly, and weigh. Ultrasonicate (power, 250 W; frequency, 33 kHz) for 10 minutes, cool to room temperature, weigh again, replenish the loss of weight with cyclohexane, shake well, centrifuge, and filter. Inject 1 μl of the successive filtrate into the column, calculated with reference to the total peaks areas of (±) borneol and (±) isoborneol.

It contains not less than 36.0 mg of Borneolum Syntheticum ($C_{10}H_{18}O$) per suppository.

Action To clear *heat* and relieve *toxicity*, reduce swelling and kill pain, and stop bleeding and regenerate tissues.

Indications Bright red blood in stools and burning pain of the anus due to excessive *heat* in the large intestine; all types of hemorrhoids and anal fissure with above symptoms.

Usage and dosage Put it into the anus in the early morning and before going to bed, or after bowel movements. 1 suppository, twice a day, or follow doctor's advice.

Precaution Be cautious about pregnant women.

Strength Equivalent to 0.33 g of crude drug per suppository

Storage Preserve in well closed containers, stored below 30℃.

Shidi Shui (十滴水)

Shidi Tincture

Ingredients Camphor 25 g; Rhizoma Zingiberis 25 g; Radix et Rhizoma Rhei 20 g; Fructus Foeniculi 10 g; Cortex Cinnamomi 10 g; Fructus Capsici 5 g; Oleum Eucalypti 12.5 ml.

Procedure Pulverize Rhizoma Zingiberis and other ingredients, except Camphor and Oleum Eucalypti, to coarse powder, and mix thoroughly. Carry out the method for percolation as described under extracts and liquid extracts (Appendix Ⅰ O), macerate with 70% ethanol for 24 hours, then begin to percolate. Collect about 750 ml of percolate, dissolve Camphor and Oleum Eucalypti in the percolate by stirring. Percolate again and collect the percolate to total 1000 ml, and mix well.

Description A brownish-red to dark-brown clear liquid, odour, slightly aromatic; taste, pungent.

Identification Evaporate 20 ml of the tincture to dryness, dissolve the residue in 20 ml of a mixture of 30% ethanol and

hydrochloric acid (10:1), heat under reflux for 1 hour on a water bath, and cool immediately. Extract with two 20-ml quantities of chloroform, combine the chloroform extracts, evaporate to dryness, dissolve the residue in 5 ml of a mixture of dehydrated ethanol and ethyl acetate (2:1) as the test solution. To 1 g of Radix et Rhizoma Rhei reference drug, add 30 ml of methanol, heat under reflux for 30 minutes on a water bath, filter, evaporate the filtrate to dryness, prepare a solution in the same manner as the reference drug solution. Dissolve emodin CRS and chrysophanol CRS in methanol to produce a mixture containing 0.5 mg of each per ml as the reference solution. Carry out the method for thin layer chromatography (Appendix Ⅵ B), using silica gel G mixed with sodium carboxymethylcellulose as the coating substance and the upper layer of a mixture of petroleum ether (30-60℃), ethyl formate, and formic acid (15∶5∶1) as the mobile phase. Apply separately 3 μl of each of the reference drug solution, the reference solution, and the test solution to the plate. After developing and removal of the plate, dry in air, examine under ultraviolet light at 365 nm. The spots in the chromatography obtained with the test solution correspond in position and colour to the spots in the chromatography obtained with the reference drug and reference solutions; expose the plate to ammonia vapour, the spots turn to red.

Relative density 0.87-0.92 (Appendix Ⅶ A).

Ethanol content 60 per cent-70 per cent (Appendix Ⅸ M).

Total solid Measure accurately 10 ml of the supernatant to an evaporating dish, previously dried to constant weight, evaporate to dryness on a water bath. Dry at 105℃ for 3 hours, allow to cool in a desiccator for 30 minutes, weigh accurately and quickly. The residue is not less than 0.12 g.

Methanol content Comply to the method of Determination of Methanol (Appendix Ⅸ T).

Other requirements Comply to the general requirements for tincture (Appendix Ⅰ N).

Assay Carry out the method for gas chromatography (Appendix Ⅵ E).

Chromatographic system and system suitability Use modified polyethylene glycol (PEG-20M) (30 m long, 0.53 mm in internal diameter, 1 μm in film thickness) as the stationary phase, column temperature gradient: initial temperature at 65℃, increase the temperature at 6℃ per minute to 155℃. The number of theoretical plates of the column is not less than 12000, calculated with the reference to the peak of camphor.

Correction factor Weigh accurately a quantity of cyclohexanone, dissolve in 70% ethanol to produce a internal standard solution containing 10 mg per ml. Weigh accurately 20 mg of camphor CRS and 10 mg of cineole CRS to a same 10 ml volumetric flask, add accurately 1 ml of the internal standard solution, dilute to volume with 70% ethanol, and mix well. Inject accurately 1 μl of the solution into the column, and calculate the correction factor.

Procedure Measure accurately 1 ml of the tincture to a 10 ml volumetric flask, add accurately 1 ml of the internal standard solution, dilute to volume with 70% ethanol, and mix well. Inject accurately 1-2 μl of the solution into the column and calculate the content.
It contains not less than 20.0 mg of camphor ($C_{10}H_{16}O$) and 6.3 mg of cineole ($C_{10}H_{18}O$) per ml.

Action To invigorate the stomach and expel summer-heat.

Indications Dizziness, nausea, abdominal pain and discomfort in the stomach and intestines in heat-stroke.

Usage and dosage 2-5 ml, appropriately reduction of the dosage for children.

Precaution Contraindicated for pregnant women and be cautious about pilots or those engaged in aerial work.

Storage Preserve in tightly closed containers, and protected from light.

Shidishui Ruanjiaonang (十滴水软胶囊)

Shidishui Soft Capsules

Ingredients Camphora 62.5 g; Rhizoma Zingiberis 62.5 g; Radix et Rhizoma Rhei 50 g; Fructus Foeniculi 25 g; Cortex Cinnamomi 25 g; Fructus Capsici 12.5 g; Oleum Eucalypti 31.25 ml.

Procedure Distil volatile oil from Rhizoma Zingiberis, Fructus Foeniculi and Cortex Cinnamomi. Macerate the drug residue of distillation and the coarse powder of Radix et Rhizoma Rhei and Fructus Capsici in 80% ethanol for 24 hours, carry out the percolation method (Appendix Ⅰ O) described under Liquid Extractives and Extractives, and percolate with 70% ethanol. Collect the percolation solution, recover ethanol and concentrate to a thin extract with a relative density of 1.30 (at 50℃), dry in vacuum, pulverize, add a quantity of vegetable oil, the above volatile oil, Camphora and Oleum Eucalypti, mix thoroughly and make to 1000 soft capsules.

Description Brown soft capsules containing a yellow oily liquid with a small amount of solid extractives; odour, fragrant; taste, pungent.

Identification (1) Extract the content of 2 capsules by shaking with two 5-ml quantities of methanol, combine the extracts and evaporate to dryness. Dissolve the residue with 10 ml of water, and add 1 ml of hydrochloric acid. Heat on a water bath for 1 hour, cool, extract with two 20-ml quantities of ethyl acetate, combine the extracts, concentrate to about 1 ml as the test solution. Prepare a solution with 0.1 g of Radix et Rhizoma Rhei reference drug in the same manner as the reference drug solution. Carry out the method for thin layer chromatography (Appendix Ⅵ B), using silica gel H mixed with sodium carboxymethylcellulose as the coating substance and the upper layer of a mixture of petroleum ether (30-60℃), ethyl formate and formic acid (15∶5∶1) as the mobile phase. Apply separately 5 μl of the test solution, 2 μl or 4 μl of the reference drug solution to the plate. After developing and removal of the plate, dry in air, and examine under ultraviolet light at 365 nm. The spots in the chromatogram obtained with the test solution correspond in position and colour to the spots in the chromatogram obtained with the reference drug solution.
(2) To the contents of 2 capsules, add 2 ml of methanol, extract by shaking, and allow to stand, use the supernatant as the test solution. Dissolve cinnamaldehyde CRS in ethanol to produce a solution containing 1 μl per ml as the reference solution. Carry out the method for thin layer chromatography (Appendix Ⅵ B), using silica gel G as the coating substance and a mixture of petroleum (60-90℃) and ethyl acetate (17∶3) as the mobile phase. Apply separately 4 μl of the test solution and 2 μl of the reference solution to the plate. After developing and removal of the plate, dry in air. Spray with alcoholic dinitrophenylhydrazine TS. The spot in the chromatogram obtained with the test solution corresponds in position and colour to the spot in the chromatogram obtained with the reference solution.
(3) Use the test solution obtained under Assay as the test solution. Dissolve cineole CRS in dehydrated ethanol to

produce a solution containing 2.4 μl per ml as the reference solution. Carry out the method for gas chromatography (Appendix Ⅵ E), using 10% polyethylene glycol 20000 as the stationary phase, maintain column temperature at 150℃. Inject separately 0.2-0.4 μl of each of the test solution and the reference solution into the column. The retention time of the peak in the chromatograph obtained with the test solution corresponds to that in the chromatograph obtained with the reference solution.

Other requirements Comply with the general requirements for capsules (Appendix Ⅰ L).

Assay Carry out the method for gas chromatography (Appendix Ⅵ E).

Chromatographic system and system suitability Use 10% Polyethylene glycol 20000 as the stationary phase, and maintain column temperature at 150℃. The number of theoretical plates of the column is not less than 2000, calculated with reference to the peak of camphor. The value of resolution factor between the peaks of camphor and the internal standard substance is not less than 2.

Correlation factor Weigh accurately 50 mg of camphor CRS and 50 mg of menthol (internal standard substance), dissolve with dehydrated ethanol in a 10 ml volumetric flask, and dilute to volume, and mix well. Inject accurately 1-2 μl of the solution into the column, and calculate.

Procedure Weigh accurately 0.8 g of the content, obtained under the test of weight variation. Extract with five 4-ml quantities of dehydrated ethanol, separate the extract, combine and transfer to a 25 ml volumetric flask, add accurately 125 mg of menthol, dissolve, dilute with dehydrated ethanol to volume, and mix well as the test solution. Inject 1-2 μl into the column, and calculate.
It contains not less than 53 mg of camphor ($C_{10}H_{16}O$) per capsule.

Action To invigorate the stomach and dispel summer-heat.

Indications Dizziness, nausea, abdominal pain and discomfort in the stomach and intestines in heat-stroke.

Usage and Dosage 1-2 capsules; appropriate dosage for children.

Precaution Contraindicated for pregnant women.

Strength 0.425 g per capsule

Storage Preserve in a dry and cool place.

Shi'erwei Yishou San (十二味翼首散)

Shi'erwei Yishou Powder

Shi'erwei Yishou Powder is a prescription used by Tibetan Nationality.

Ingredients Herba Pterocephali 100 g; Herba Aconiti 75 g; Herba Hypecoi 75 g; Concretio Silicea Bambusae 75 g; Flos Carthami 60 g; Lignum Santali Abli 50 g; Benzoinum 25 g; Herba Oxytropidis 50 g; Folium Aconiti Szechenyiani 40 g; Extractum Faeces Trogopterori 50 g; Calculus Bovis 0.5 g; Moschus 0.5 g.

Procedure Pulverize the above ingredients, except Calculus Bovis and Moschus, to fine powder and sift. Triturate Calculus Bovis and Moschus with the above fine powder, sift and mix well.

Description A greyish-brown powder; odour, aromatic; taste, bitter and numb.

Identification (1) Microscopical: Unicellular non-glandular hairs colourless; glandular hairs with 2-4-celled head and 1-celled stalk. Scalariform vessels frequently observed, 16-32 μm in diameter, with narrow scalariform pits. Prisms of calcium oxalate relatively numerous, about 32-40 μm in diameter. Irregular fragments colourless, transparent, with straight ledges and angle, dissolved in chloral hydrate TS. Pollen grains rounded or elliptical, up to 60 μm in diameter, extine with thorns and 3 germinal apertures. Wood fibre bundles pale yellow, surrounded by cells containing prisms of calcium oxalate, forming crystal fibres, walls of crystal cells thickened and lignified, with well-defined striations. Resin crystals nonfixiform, reddish-brown, translucent, distinctly acuted. Stone cells separated, elongated, about 70 μm long and 8-14 μm in diameter, walls thickened, with few single pits. Leaf epidermal cells elongated polygonal or irregular, with wavy anticlinal walls; stomata numerous, oblong or subrounded, anisocytic type, with 3-4 subsidiary cells. Cells often in groups, elliptical or half round, pale yellow, with very thickened walls and distinct lumen. Irregular masses yellowish-brown or brownish-red, congregated by many small granules.
(2) To 5 g add 10 ml of methanol, shake, macerate overnight, filter and use the filtrate as the test solution. Prepare a solution with Herba Hypecoe Leptocarpe reference drug in the same manner as the reference drug solution. Carry out the method for thin layer chromatography (Appendix Ⅵ B), using silica gel G as the coating substance and a mixture of cyclohexane, chloroform and methanol (1∶7∶3) as the mobile phase. Apply separately 5 μl of each of the two solutions to the plate. After developing and removal of the plate, dry in air. Spray with the modified potassium iodobismuthate TS. The brown spots in the chromatogram obtained with the test solution correspond in position and colour to the spots in the chromatogram obtained with the reference drug solution.

Other requirements Comply with the general requirements for powders (Appendix Ⅰ B).

Action To remove toxic *heat*.

Indications Influenza, dysentery, febrile diseases.

Usage and dosage 1 g, twice a day.

Precaution Contraindicated in pregnancy.

Storage Preserve in tightly closed containers.

Shihu Yeguang Wan (石斛夜光丸)

Shihu Yeguang Pills

Ingredients Herba Dendrobii 30 g; Radix et Rhizoma Ginseng 120 g; Rhizoma Dioscoreae 45 g; Poria 120 g; Radix et Rhizoma Glycyrrhizae 30 g; Herba Cistanches 30 g; Fructus Lycii 45 g; Semen Cuscutae 45 g; Radix Rehmanniae 60 g; Radix Rehmanniae Praeparata 60 g; Fructus Schisandrae Chinensis 30 g; Radix Asparagi 120 g; Radix Ophiopogonis 60 g; Semen Armeniacae Amarum 45 g; Radix Saposhnikoviae 30 g; Rhizoma Chuanxiong 30 g; Fructus Aurantii (stir-baked) 30 g; Rhizoma Coptidis 30 g; Radix Achyranthis Bidentatae 45 g; Flos Chrysanthemi 45 g; Fructus Tribuli (stir-baked with salt) 30 g; Semen Celosiae 30 g; Semen Cassiae 45 g; Pulvis Cornus Bubali Concentratus 60 g; Cornu Saigae Tataricae 30 g.

Procedure File and triturate Cornu Saigae Tataricae to fine powder. Pulverize the other ingredients, except Pulvis

Cornus Bubali Concentratus, to fine powder. Triturate Pulvis Cornus Bubali Concentratus with the above powders, sift and mix thoroughly. To each 100 g of the powder add 35-50 g of refined honey and a quantity of water to make pills and dry; or add 100-120 g of refined honey to make small honeyed pills or big honeyed pills.

Description Brown water-honeyed pills, brownish-black small honeyed pills or big honeyed pills; taste, sweet but with bitter sensation.

Identification (1) Microscopical: Irregular branched masses colourless, dissolved in chloral hydrate solution; hyphae colourless or pale brown, 4-6 μm in diameter. Subrounded cells surrounding fibres surface, containing small rounded silica bodies, arranged in rows. Fibre bundles surrounded by parenchymatous cells containing prisms of calcium oxalate, forming crystal fibres. Fibre bundles bright yellow, with slightly thickened and distinctly pitted walls. Stone cells of testa pale yellow with sinuous walls, sometimes containing brown contents. Stone cells of epidermis of testa pale yellowish-brown, polygonal in surface view, with thickened walls showing fine and dense pit-canals, lumina containing dark brown contents. Stone cells rectangular or slat-shaped, 50-110 μm in diameter, with fine and dense pits. Stone cells orange-yellow, conchoidal, with thickened walls, showing distinct pits on the broader side. Raphides of calcium oxalate 80-240 μm long, occurring in mucilage cells, needles 2-8 μm in diameter. Prisms of calcium oxalate abundant in parenchyma. Cells of testa dark reddish-brown, polygonal or elongated polygonal in surface view, with reticulate striations. Palisade cells of testa arranged in a row, the cells beneath containing clusters and prisms of calcium oxalate. Pollen grains subrounded, 24-34 μm in diameter, extine with spinules of 3-5 μm long, and 3 germinal apertures. Parenchyma greyish-brown to blackish-brown, cells mostly shrunken and each containing a nucleus-like mass. Vitae containing golden yellow secretion about 30 μm in diameter. Irregular fragments somewhat lustrous, with evenly distributed slit-shaped or rounded pits.

(2) Cut 9 g of the small or the big honeyed pills into pieces, or pulverize 6 g of the water-honeyed pills to powder, add 50 ml of methanol, heat under reflux on a water bath for 1 hour, cool, filter, and use the filtrate as the test solution. To 0.4 g of Rhizoma Coptidis reference drug add 20 ml of methanol, heat under reflux on a water bath for 1 hour, filter, and use the filtrate as the reference drug solution. Dissolve berberine hydrochloride CRS in methanol to produce a solution containing 0.5 mg per ml as the reference solution. Carry out the method for thin layer chromatography (Appendix Ⅵ B), using silica gel G as the coating substance and a mixture of benzene, ethyl acetate, methanol, isopropanol and concentrated ammonia TS (12∶6∶3∶3∶1) as the mobile phase. Apply separately 5 μl of the test solution and 1 μl of each of the reference drug solution and the reference solution to the plate. After developing the plate in a chamber pre-equilibrated with ammonia vapour, remove the plate, and allow to dry in air. Examine under the ultraviolet light at 365 nm. The yellow fluorescent spots in the chromatogram obtained with the test solution correspond in position and colour to the spots in the chromatogram obtained with the reference drug solution, and the yellow fluorescent spot in the chromatogram obtained with the test solution corresponds in position and colour to the spot in the chromatogram obtained from the reference solution.

(3) To 1 g of Rhizoma Chuanxiong reference drug add 10 ml of petroleum ether (60-90℃), macerate for 30 minutes, filter, and use the filtrate as the reference drug solution. Carry out the method for thin layer chromatography (Appendix Ⅵ B), using silica gel G as the coating substance and a mixture of petroleum ether (60-90℃) and ethyl acetate (17∶3) as the mobile phase. Apply separately 10 μl of the test solution obtained under Identification test (2) and 5 μl of the reference drug solution to the plate. After developing and removal of the plate, dry in air. Examine under ultraviolet light at 365 nm. The fluorescent spots in the chromatogram obtained with the test solution correspond in position and colour to the spots in the chromatogram obtained with the reference drug solution.

(4) Grind well or cut into pieces 6 g of water honeyed pills, or 9 g of honeyed pills, to a conical flask, add 30 ml of ether. Ultrasonicate for 10 minutes, discard the ether solution. Add 50 ml of *n*-butanol saturated with water to the residue, ultrasonicate for 30 minutes, and filter, wash the filtrate with two 15-ml quantities of 0.5% sodium hydroxide, and wash again with water saturated with *n*-butanol to pH 7. Evaporate the *n*-butanol extracts to dryness, and dissolve the residue in 1 ml of methanol as the test solution. Dissolve ginsenoside Rg_1 CRS and ginsenoside Re CRS in methanol to produce two solutions each containing 1 mg per ml as the reference solutions. Carry out the method for thin layer chromatography (Appendix Ⅵ B), using silica gel G as the coating substance and the layer of lower a mixture of chloroform, methanol, and water (13∶7∶2, after standing below 10℃) as the mobile phase. Apply separately 10 μl the test solution and 6 μl of each of the above two reference solutions to the plate, after developing and removal of the plate, dry in air, and spray with a 10% sulfuric acid in ethanol, and heat at 105℃ to spots clear. The spots in the chromatogram obtained with the test solution correspond in position and colour to the spots in the chromatogram obtained with the reference solutions.

(5) Grind well or cut into pieces 6 g of water-honeyed pills or 9 g of honeyed pills, to a conical flask, add 40 ml of *n*-butanol saturated with water. Ultrasonicate for 20 minutes, filter, evaporate the filtrate to dryness. Dissolve the residue in 30 ml of water, and add 3 ml of hydrochloric acid, heat under reflux for 1 hour, cool. Extract with two 20-ml quantities of chloroform, combine chloroform extracts, and evaporate to dryness, dissolve the residue in 1 ml of chloroform as the test solution. Prepare a solution of 1 g of Radix Ophiopogonis reference drug in the same manner as the reference drug solution. Carry out the method for thin layer chromatography (Appendix Ⅵ B), using silica gel G as the coating substance and a mixture of chloroform and acetone (4∶1) as the mobile phase. Apply separately 10 μl of each of above solutions to the plate, after developing and removal of the plate, dry in air, and spray with a 10% sulfuric acid in ethanol, and heat at 105℃ to spots clear. The spots in the chromatogram obtained with the test solution correspond in position and colour to the spots in the chromatogram obtained with the reference drug solution.

Other requirements Comply with the general requirements for pills (Appendix Ⅰ A).

***n*-Butanol Extractives** Triturate or cut into pieces 6 g of water-honeyed pills, or 9 g of honeyed pills, weigh accurately, add accurately the same quantity of kieselguhr, grind to mix well. Weigh accurately 4 g of the mixture to a stopper conical flask, add 50 ml of *n*-butanol saturated with water, weigh, and allow to stand over night. Ultrasonicate for 30 minutes, weigh again, replenish the lost weight with *n*-butanol saturated with water, stir well, and filter. Measure accurately 25 ml of successive filtrate in a evaporating dish, dried to constant weight, evaporate to dryness on a water bath and then dry at 105℃ for 3 hours, move to a desiccator, allow to cool for 30 minutes, weigh accurately immediately, and calculate.

It contains not less than 8.0 per cent *n*-butanol extractives of

water-honeyed pills and 5.5 per cent of big or small honeyed pills.

Action To nourish *kidney-yin* and clear the liver to improve vision.

Indications Cataract with impaired vision, or dim-sightedness due to deficiency in the liver and the kidney and hyperactivity of *fire* from insufficient *yin*.

Usage and dosage 6 g of water-honeyed pills, 9 g of small honeyed pills or 1 honeyed pill, twice a day.

Strength 9 g per big honeyed pill

Storage Preserve in tightly closed containers.

Shiliuwei Dongqing Wan (十六味冬青丸)

Shiliuwei Dongqing Pills

Shiliuwei Dongqing Pills are prescription used by Mongolian Nationality.

Ingredients Folium Ilicis Chinensis 150 g; Fructus Punicae Granati 25 g; Gypsum Fibrosum 75 g; Cortex Cinnamomi 50 g; Fructus Amomi Rotundus 50 g; Radix Aucklandiae 50 g; Flos Caryophylli 50 g; Radix et Rhizoma Glycyrrhizae 50 g; Fructus Vitis Viniferae 125 g; Lignum Aquilariae Resinatum 75 g; Rhizoma Bistortae 75 g; Fructus Piperis Longi 50 g; Semen Myristicae 50 g; Flos Carthami 50 g; Fructus Choeros-pondiatis 50 g; Eriocheir seu Potamon 50 g.

Procedure Pulverize the above ingredients, except Fructus Vitis Viniferae, to coarse powder. Triturate Fructus Vitis Viniferae with the above coarse powder, dry by heating and then pulverize to fine powder, sift and mix thoroughly. To each 100 g of the powder add 110-130 g of refined honey to make big honeyed pills.

Description Brown big honeyed pills; odour, slightly aromatic; taste, sweet, pungent, slightly bitter and astringent.

Identification (1) Microscopical: Head of glandular scales subrounded, composed of tens of cells, in radial arrangement, 40-80 μm in diameter, brownish-yellow, often broken into fan-shape. Stone cells colourless, elliptical subrounded, or , walls relatively thickened, with distinct striations and fine pit-canals. Fibres separated, long fusiform, 24-50 μm in diameter, walls thickened and lignified. Sclerenchymatous cells of endopleura yellowish-brown or brownish-red, subpolygonal in surface view, walls thickened, lumina containing silica bodies. Pollen grains triangular, 16 μm in diameter. Fibre bundles surrounded by parenchymatous cells containing prisms of calcium oxalate, forming crystal fibres. Walls of fibre-tracheids slightly thickened, with bordered pits, pit apertures V-like or crossed. Clusters of calcium oxalate about 40 μm in diameter. Pollen grains globular or elliptical, about 60 μm in diameter, with thorns on extine, and 3 germinal apertures. Fibres of carpodermis pale yellow, usually twisted, lumina narrow, containing fine brownish-yellow granules. Irregular flat crystals colourless, with straight striations.

(2) Pulverise 5 g of the pills, add 20 ml of ether, shake for 15 minutes, filter and evaporate the filtrate to about 2 ml as the test solution. Prepare a solution of 0.2 g of Radix Aucklandiae reference drug and 10 ml of ether in the same manner as the reference drug solution. Dissolve eugenol CRS in ether to prepare a solution containing 1 μl per ml as the reference solution. Carry out the method for thin layer chromatography (Appendix Ⅵ B), using silica gel G as the coating substance and a mixture of cyclohexane, benzene and acetone (3∶3∶0.2) as the mobile phase. Apply separately 10 μl of each of the above two solutions to the plate. After developing and removal of the plate, dry in air. Spray with 1% vanillin in sulfuric acid. The spots in the chromatogram obtained with the test solution correspond in position and colour to the spots in the chromatogram obtained with the reference drug solution; heat at 105℃ for 5 minutes, examine under ultraviolet light at 365 nm. The fluorescent spot in the chromatogram obtained with the test solution corresponds in position and colour to the spot in the chromatogram obtained with the reference solution.

(3) To 6 g of big honeyed pills, cut into pieces, place to a stopper conical flask. Add 10 ml of ethanol, macerate for 20 minutes, shake momently, filter, and use the filtrate as the test solution. Dissolve cinnamaldehyde CRS in ethanol to produce a solution containing 1 μg per ml as the reference solution. Carry out the method for thin layer chromatography (Appendix Ⅵ B), using silica gel G as the coating substance and a mixture of petroleum ether (60-90℃) and ethyl acetate (17∶3) as the mobile phase. Apply separately 10 μl of the test solution and 2 μl of the reference solution to the plate. After developing and removal of the plate, dry in air, and spray with alcoholic dinitrophenylhydrazine TS. The spot in the chromatogram obtained with the test solution corresponds in position and colour to the spot in the chromatogram obtained with the reference solution.

Other requirements Comply with the general requirements for pills (Appendix Ⅰ A).

Assay Carry out the method for gas chromatography (Appendix Ⅵ E).

Chromatographic system and system suitability Use 10% polyethylene glycol (PEG)-20 M as the stationary phase and maintain the column temperature at 190℃, inject inlet temperature at 220℃, and detector at 250℃. The number of theoretical plates of the column is not less than 1000, calculated with the reference of the peak of eugenol.

Reference solution Weigh accurately a quantity of eugenol CRS, dissolve in *n*-hexane to produce a solution containing 2 mg per ml.

Test solution With the pills obtained under the test of weight variation, cut into pieces, weigh accurately 0.5 g to a 1000 ml ground-bottom flask, add 300 ml of water, and few glass balls, connect to an apparatus for the determination of volatile oil. Add water through the top of the apparatus until the graduated tube is filled and overflows to the flask, then add 2 ml of *n*-hhexane and connect to the reflux condenser. Heat under reflux and keep boiling for 5 hours, cool, separate *n*-hexane layer, and wash the apparantus with three 2-ml quantities of *n*-hexane, combine *n*-hexane extract and transfer to a 10 ml volumetric flask, dilute with *n*-hexane to volume, mix well as the test solution.

Procedure Inject accurately 1 μl of the test solution into the column and calculate the contents.

It contains not less than 12 mg of eugenol ($C_{10}H_{12}O_2$) per pill, referred to Flos Carthami.

Action To relieve chest stuffiness, cough and asthma.

Indications Chest stuffiness, abdominal distension, dizziness, edema, cough due to cold and dyspmea caused by phlegm.

Usage and dosage 1 pill, 1-2 times a day.

Strength 6 g per pill

Storage Preserve in tightly closed containers.

Shiquan Dabu Wan
(十全大补丸)

Shiquan Dabu Pills

Ingredients Radix Codonopsis 80 g; Rhizoma Atractylodis Macrocephalae (stir-baked) 80 g; Poria 80 g; Radix et Rhizoma Glycyrrhizae praeparata Cum Melle 40 g; Radix Angelicae Sinensis 120 g; Rhizoma Chuanxiong 40 g; Radix Paeoniae Alba (processed with wine) 80 g; Radix Rehmanniae praeparata 120 g; Radix Astragali praeparata Cum Melle 80 g; Cortex Cinnamomi 20 g.

Procedure Pulverize the above ten ingredients to fine powder, sift and mix thoroughly. To each 100 g of the powder add 30-50 g of refined honey and a quantity of water to make water-honeyed pills and dry; or add 100-120 g of refined honey to make big honeyed pills.

Description Brown to blackish-brown water-honeyed pills or big honeyed pills; odour, aromatic; taste, sweet and slightly pungent.

Identification (1) Microscopical: Irregular branched masses colourless, dissolved in chloral hydrate TS; hyphae colourless or pale brown, 4-6 μm in diameter. Anastomosing laticiferous tubes 12-15 μm in diameter, containing minute granular contents. Parenchyma greyish-brown to blackish-brown, cells mostly shrunken, and each containing a brown nucleus-like mass. Fibres in bundles or scattered, with thickened walls, longitudinal fissures on surface, and two ends broken to broom-shape or truncate. Fibre bundles surrounded by parenchymatous cells containing prisms of calcium oxalate, forming crystal fibres. Needle crystals of calcium oxalate fine, 10-32 μm long, irregularly filling in parenchymatous cells. Clusters of calcium oxalate 18-32 μm in diameter, scattered in parenchymatous cells, often in rows, or several in a cell. Parenchymatous cells fusiform, with slightly thickened walls, and very fine obliquit crisscross striations. Stone cells subrounded or subrectangular, 32-88 μm in diameter with unevenly thickened walls, thin on one side. Spiral vessels 14-50 μm in diameter, with thickened walls connected each other, like reticular-spiral vessels.

(2) Triturate 18 g, with 10 g of kieselguhr, add 80 ml of ethanol, ultrasonicate for 20 minutes and filter. Evaporate one half of the filtrate to dryness, dissolve the residue in 20 ml of water, extract with three 20-ml quantities of *n*-butanol saturated with water. Combine the extracts, wash with three 15-ml quantities of water, discard the washings, and evaporate the extract to dryness. Dissolve the residue in 2 ml of ethanol as the test solution. Dissolve paeoniflorin CRS in ethanol to prepare a solution containing 2 mg per ml as the reference solution. Carry out the method for thin layer chromatography (Appendix Ⅵ B), using silica gel G as the coating substance and a mixture of chloroform, ethyl acetate, methanol and formic acid (40∶5∶10∶0.2) as the mobile phase. Apply separately 5-10 μl of each of the two solutions to the plate. After developing and removal of the plate, dry in air, spray with 5% vanillin in sulfuric acid and heat to spots clear. The spot in the chromatogram obtained with the test solution corresponds in position and colour to the spot in the chromatogram obtained with the reference solution.

(3) Use the ethanol filtrate obtained under Identifiction (2) as the test solution. Prepare a soluiton of 1 g of Radix Angelicae Sinensis reference drug and 10 ml of ethanol in the same manner as the reference drug solution. Carry out the method for thin layer chromatography (Appendix Ⅵ B), using silica gel G as the coating substance and a mixture of *n*-hexane and ethyl acetate (9∶1) as the mobile phase. Apply separately 5-10 μl of each of the two solutions to the plate. After developing and removal of the plate, dry in air, and examine under ultraviolet light at 365 nm. The bright bluish-white fluorescent spots in the chromatogram obtained with the test solution correspond in position and colour to the spots in the chromatogram obtained with the reference drug solution.

(4) Triturate or cut into pieces 18 g of water-honeyed pills or big honeyed pills, add a quantity of kieselguhr, grind to mix well, place to a stopper conical flask. Add 80 ml of ether, ultrasonicate for 15 minutes, discard ether solution, and evaporate the residue to dryness. Add 80 ml of methanol, and ultrasonicate for 30 minutes, filter. Evaporate the filtrate to dryness, and dissolve the residue in 20 ml of water, extract with three 20-ml quantities of *n*-butanol saturated with water, combine *n*-butanol solution and extract with two 50-ml quantities of ammonia TS saturated with *n*-butanol, and wash again with 20 ml of water. Evaporate the *n*-butanol solution to dryness, dissolve the residue in 25 ml of water, and apply to a column packed with D-101 macroporous resin (1.5 cm in internal diameter, 13 cm in height) and elute separately with 50 ml of water and 40 ml of 40% ethanol, discard the eluate, then elute with 80 ml of 70% ethanol, and collect the eluate. Evaporate the eluate on a water bath to dryness, and dissolve the residue in 1 ml of methanol as the test solution. Dissolve Astragaloside Ⅳ CRS in methanol to produce a solution containing 1 mg per ml as the reference solution. Carry out the method for thin layer chromatography (Appendix Ⅵ B), using silica gel G as the coating substance and the lower layer of the mixture of chloroform, ethyl acetate, methanol and water (15∶40∶22∶10, standing below 10℃) as the mobile phase. Apply separately 3-8 μl of the test solution and the reference solution to the plate. After developing and removal of the plate, dry in air, and spray with a 10% sulfuric acid in ethanol, and heat at 105℃ to spots clear. Examine under daylight and ultraviolet light at 365 nm separately. The spot in the chromatogram obtained with the test solution corresponds in position and colour to the spot in the chromatogram obtained with the reference solution, and same fluorescent spot under ultraviolet light.

Other requirements Comply with the general requirements for pills (Appendix Ⅰ A).

Assay Carry out the method for high performance liquid chromatography (Appendix Ⅵ D).

Chromatographic system and system suitability Use octadecylsilane bonded silica gel as the stationary phase, and a mixture of acetonitrile and water (17∶83) as the mobile phase. As detector a spectrophotometer set at 230 nm. The number of theoretical plates of the column is not less than 3000, calculated with the reference to the peak of paeoniflorin.

Reference solution Weigh accurately a quantity of paeoniflorin CRS, dissolve in dilute ethanol TS to produce a solution containing 40 μg per ml.

Test solution Triturate water-honeyed pills to powder or cut big honeyed pills, obtained under the test of weight variation, into pieces, weigh accurately 1 g of the powder or pieces in a stopper conical flask, add accurately 25 ml of dilute ethanol TS, closely stopper and weigh. Ultrasonicate for 1 hour (power, 250 W; frequency, 30 kHz), cool, weigh again, replenish the lost weight with dilute ethanol TS, mix well and centrifuge. Use the successive filtrate of the supernatant as the test solution.

Procedure Inject accurately 10 μl of each of the reference solution and the test solution into the column respectively and calculate the content.
It contains not less than 0.55 mg of paeoniflorin ($C_{23}H_{28}O_{11}$) per gram of small water-honeyed pills, and 3.6 mg per pill of big honeyed pills, referred to Radix Paeoniae Alba.

Action To reinforce *qi* and blood with herbal medicines warm in property.

Indications Pallor, shortness of breath, palpitation, dizziness, spontaneous sweating, lassitude and cold extremities, or profuse menstrual blood in periods due to a deficiency of *qi* and blood.

Usage and dosage 6 g of water-honeyed pills or 1 big honeyed pill, 2-3 times a day.

Strength 9 g per big honeyed pill

Storage Preserve in tightly closed containers.

Shisanwei Bangga San
(十三味榜嘎散)

Shisanwei Bangga Powder

Shisanwei Bangga Powder is a prescription used by Tibetan Nationality.

Ingredients Herba Aconiti 60 g; Semen Herpetospermi Caudigeri 30 g; Flos Gentianae Straminiae 40 g; Herba Swertiae Bimaculatae 40 g; Baxiaga 40 g; Herba Ixeris Chinensis 40 g; Herba Lagotidis 40 g; Cortex Berberidis 40 g; Herba Hypecoe Leptocarpe 40 g; Herba Chrysosplenii 30 g; Calculus Bovis 3 g; Flos Carthami 20 g; Semen Holarrhenae 30 g.

Procedure Pulverize the above ingredients, except Calculus Bovis, to fine powder, sift. Triturate Calculus Bovis and mix thoroughly with the above power, sift and mix well.

Description A green powder; odour, slight aromatic; taste, bitter.

Identification (1) Microscopical: Scalariform vessels often observed, 16-32 μm in diameter, with narrow scalariform pits. Stone cells large, irregularly shaped, about 120 μm long and 23-76 μm in diameter, walls thickened, with distinct striations and faint pit-canals, Pollen grains subspherical in polar view and oblated spherical in equatorial view, with 3 germinal apertures and indistinct sculptured on surface, 36 μm in diameter. Woody fibres in bundles or scattered singly, walls beaded, with oblique pits, about 148 μm long and 18-22 μm in diameter. Leaf epidermal cells irregularly shaped, anticlinal walls straighten or twisted, stomata anomocytic, with 4-5 subsidiary cells. Unicellular non-glandular hairs numerous, scattered or several assembled together, mostly broken; cells branched, about 260 μm long and 10 μm in diameter, with thin walls. Fibrous cells long slat-shaped or long spindle-shaped, about 120 μm long, pits and pit-canals indistinct. Phloem fibres pale yellow, often in bundles and occasionally scattered, long fusiform, straight, 14-20 μm in diameter, walls lignified. Prisms of calcium oxalate relatively numerous, 32-40 μm in diameter. Endodermis cells scarcely observed, with distinct Casparian's thickness. Irregularly masses cloud-like, yellowish-brown or brownish-red, composed of many grains. Pollen grains subspherical or elliptical, about 60 μm in diameter, with thorns, and 3 germinal apertures. Testa epidermal cells yellowish brown, fluff-like projected or short unicellular non-granular hairs-like, with rounded blunt ends and relatively thickened walls, and in various length.

(2) To 5 g add 10 ml of methanol, shake, macerate overnight, filter and use the filtrate as the test solution. Prepare a solution with Herba Swertiae Bimaculatae reference drug as the reference drug solution in the same manner. Carry out the method for thin layer chromatography (Appendix Ⅵ B), using silica gel G as the coating substance and a mixture of ether, ethyl acetate and methanol (1∶5∶2) as the mobile phase. Apply separately 5 μl of each of the two solutions to the plate. After developing and removal of the plate, dry in air, spray with 1% aluminium chloride in ethanol, and dry. Examine under ultraviolet light at 365 nm. The green fluorescent spots in the chromatogram obtained with the test solution correspond in position and colour to the spots in the chromatogram obtained with the reference drug solution.
(3) Prepare a solution of 1 g of Cortex Berberis reference drug in the same manner as described under Identification test (2) as the reference drug solution. Carry out the method for thin layer chromatography (Appendix Ⅵ B), using silica gel G as the coating substance and a mixture of ethyl acetate, formic acid and water (1∶1∶1) as the mobile phase. Apply separately 5 μl of each of the test solution obtained under Identification (2) and above reference drug solution to the plate. After developing and removal of the plate, dry in air, examine under ultraviolet light at 365 nm. The yellow fluorescent spots in the chromatogram obtained with the test solution correspond in position and colour to the spots in the chromatogram obtained with the reference drug solution.
(4) Prepare two solutions of 1 g of each of Herba Hypecoe Leptocarpe reference drug and Semen Holarrhenae reference drug as the reference drug solutions in the same manner as described under Identification (2) as the reference drug solution. Carry out the method for thin-layer chromatography (Appendix Ⅵ B), using silica gel G as the coating substance and a mixture of cyclohexane, chloroform and diethylamine (8∶1∶1) as the mobile phase. Apply separately 5 μl of each of the test solution obtained under Identification (2) and the reference drug solutions to the plate. After developing and removal of the plate, dry in air, spray with the modified potassium iodobismuthate TS. The brown spots in the chromatogram obtained with the test solution correspond in position and colour to the spots in the chromatogram obtained with the reference drug solutions.

Other requirements Complies with the general requirements for powders (Appendix Ⅰ B).

Action To remove *heat* from the liver and clear jaundice.

Indications Icteric hepatitis, cholecystitis.

Usage and dosage 1-1.5 g, twice a day.

Storage Preserve in well closed containers, protected from moisture.

Shiwuwei Chenxiang Wan
(十五味沉香丸)

Shiwuwei Chenxiang Pills

Shiwuwei Chenxiang Pills are prescription used by Tibetan Nationality.

Ingredients Lignum Aquilariaę Resinatum 100 g; Radix Inulae Racfmosae 150 g; Lignum Santali Albi 50 g; Lignum Pterocarpi Santalini 150 g; Flos Carthami 100 g; Semen Myristicae 25 g; Herba Pegaeophyti 150 g; Caulis Rubi (barked and pithed) 200 g; Caulis Polygoni Aubertii (barked) 100 g; Rhizoma zingiberis 50 g; Calx Pulveratum

100 g; Fructus Choerospondiatis 50 g; Fructus Chebulae (cored) 80 g; Fructus Terminaliae Billericae (cored) 80 g; Fructus Phyllanthi 100 g.

Procedure Pulverize the above fifteen ingredients to fine powder, sift and mix well. Make pills with water and dry.

Description Yellowish-brown, brownish-red to brown watered pills; odour, aromatic; taste, bitter.

Identification (1) Microscopical: Bordered pitted vessels with closely arranged pits, containing pale yellow or yellowish-brown resin masses. Wood fibres in bundles, pale yellow, surrounded by cells containing prisms of calcium oxalate, forming crystal fibres, walls of crystal cells thickened and lignified, with distinct striations. Wood ray cells subrounded or subtriangular in tangential sectional view, walls slightly thickened and lignified, with distinct pit-canals, lumina containing prisms of calcium oxalate. Pollen grains rounded or ellipsoidal, up to 60 μm in diameter, extine with spinules and 3 germinal apertures. Fatty oil drops gradually forming clustered needle crystals on heating in chloral hydrate TS. Double spiral vessels 10-26 μm in diameter. Fibres mostly broken, thick-walled, with fissures, faint pits and pit-canals. Sclerenchymatous cells subsquare or subrounded, walls unevenly thickened and lignified, with inconspicuous striations, lumina containing prisms of calcium oxalate. Starch granules single, long-ovoid, broadly ovoid, or irregularly shaped 25-32 μm in diameter, hilum pointed, at the narrow end, striations well-defined. Crystals of calcium carbonate short clavate or columned, 2-4 μm in diameter, up to 65 μm long. Epidermal cells of pericarp in groups, subrounded or subpolygonal in surface view, lumina containing granular contents. Lignified cells rectangular, containing clusters of calcium oxalate, walls lignified, with oblique slit-like pits. Non-glandular hairs 1-2-celled, 7-20 μm in diameter, some cells containing yellow or yellowish-brown contents. Parenchymatous cells subrounded or subpolygonal, containing prisms, rounded clusters or sand crystal of calcium oxalate.

(2) To 0.5 g, in powder, add 10 ml of water, warm slightly and filter. The filtrate releases the characteristic odour of Lignum Santali Albi on heating. Cool the filtrate, add 1 drop of ferric chloride TS; a bluish-black colour is produced, which disappears on adding a drop of sulfuric acid.

(3) To 0.5 g, in powder, add 5 ml of 0.1% solution of potassium hydroxide, boil, cool, add 5 ml of water and filter. Acidified the filtrate slightly with dilute hydrochloric acid TS, add 5 ml of ether and shake. Separate the ether solution, add 5 drops of ammonia TS, a brownish-red colour is produced immediately.

(4) Moister 3 g, in fine powder, with strong ammonia TS. Add 10 ml of ether, stopper well, shake, stand for 12 hours, filter, and evaporate the filtrate to 1 ml as the test solution. Prepare a solution of 2 g of Radix Inulae Racfmosae reference drug in the same manner as the reference drug solution. Carry out the method for thin layer chromatography (Appendix Ⅵ B), using silica gel G mixed with sodium carboxymethylcellulose as the coating substance and a mixture of cyclohexane and ethyl acetate (3:1) as the mobile phase. Apply separately 10 μl of each of the two solutions to the plate. After developing and removal of the plate, dry in air. and spray with a dilute potassium iodobismuthate TS. The spots in the chromatogram obtained with the test solution correspond in position and colour to the spots in the chromatogram obtained with the reference drug solution.

Other requirements Comply with the general requirements for pills (Appendix Ⅰ A).

Action To regulate the flow of *qi* and blood, relieve cough, and induce tranquilization.

Indications Stagnation of *qi* and blood marked by chest pain; dry cough with shortness of breath; insomnia.

Usage and dosage 3-4 pills, twice a day.

Precaution Be cautious about the patients with kidney disease.

Specification 0.5 g per pill.

Storage Preserve in well closed containers, protected from moisture.

Shixiang Fansheng Wan
(十香返生丸)

Shixiang Fansheng Pills

Ingredients Lignum Aquilariae Resinatum 30 g; Flos Caryophylli 30 g; Lignum Santali Albi 30 g; Radix Aristolochiae 30 g; Rhizoma Cyperi (processed with vinegar) 30 g; Lignum Dalbergiae Odoriferae 30 g; Herba Pogostemonis 30 g; Olibanum (processed with vinegar) 30 g; Rhizoma Gastrodiae 30 g; Bombyx Batryticatus (stir-baked with bran) 30 g; Radix Curcumae 30 g; Plumula Nelumbinis 30 g; Semen Trichosanthis (stir-baked with honey) 30 g; Lapis Micae Aureus (calcined) 30 g; Fructus Chebulae (cored) 30 g; Radix et Rhizoma Glycyrrhizae 60 g; Styrax 30 g; Benzoinum 30 g; Moschus 15 g; Borneolum Syntheticum 7.5 g; Cinnabaris 30 g; Succinum 30 g; Calculus Bovis 15 g.

Procedure Levigate Cinnabaris to very fine powder, pulverize separately Succinum, Benzoinum, Moschus, Borneolum Syntheticum and Calculus Bovis to fine powder. Stew Styrax to melt and filter. Pulverize the other sixteen ingredients to fine powder, sift, mix thoroughly, and triturate with the above six powders, sift and mix thoroughly. To each 100 g of the powder add 90-100 g of refined honey and Styrax to make big honeyed pills.

Description Dark brown big honeyed pills; odour, aromatic; taste, sweet and bitter.

Identification (1) Microscopical: embedded with minute prisms of calcium oxalate. Needle crystals of calcium oxalate in bundles or scattered, 25-75 μm long. Fragments of tissue containing gelatinized polysaccharides stained brown or light brown-violet on adding iodine TS.

(2) To 6 g, cut into pieces, add 10 ml of ether, shake for 15 minutes, filter, and use the filtrate as the test solution. Prepare a solution of 0.15 g of Styrax reference drug in the same manner as the reference drug solution. Carry out the method for thin layer chromatography (Appendix Ⅵ B), using silica gel GF_{254} mixed with sodium carboxymethylcellulose as the coating substance and a mixture of petroleum ether (30-60℃), *n*-hexane, ethyl formate and formic acid (10:30:15:1) as the mobile phase. Apply separately 10 μl of each of the two solutions to the plate. After developing at 11-13℃ and removal of the plate, dry in air, examine under ultraviolet light at 254 nm. The spots in the chromatogram obtained with the test solution correspond in position and colour to the spots in the chromatogram obtained with the reference drug solution.

(3) To 10 g, cut into pieces, add 50 ml of ethanol and heat under reflux for 1 hour. Cool, filter and use the filtrate as the test solution. Dissolve cholic acid CRS in ethanol to produce a solution containing 0.2 mg per ml as the reference solution. Carry out the method for thin layer

chromatography (Appendix VI B), using silica gel G as the coating substance and a mixture of chloroform, ether and glacial acetic acid (2∶2∶1) as the mobile phase. Apply separately 10 μl of the test solution and 2 μl of the reference solution to the plate. After developing and removal of the plate, dry in air, spray with 10% phosphomolybdic acid in ethanol and heat at 105℃ for 10 minutes. The spot in the chromatogram obtained with the test solution corresponds in position and colour to the spot in the chromatogram obtained with the reference solution.

(4) To 12 g of big honeyed pills, cut into pieces, carry out the method for determination of volatile oil (Appendix X D). Add 1 ml of *n*-hexane, heat and keep boiling for 3 hour, allow stand for 30 minutes, then add some of anhydrous sodium sulphate. Use the supernatant as the test solution. Dissolve a quantity of the mixture of (±)-borneol and (±)-isoborneol CRS in *n*-hexane to produce a solution containing 2.5 mg per ml as the reference solution. Carry out the method for gas chromatography (Appendix VI E). Use a 2 m long column packed with 10% phenyl OV-17 as the stationary phase. Maintain the column temperature at 150℃. Inject a quantity volume of the test solution and the reference solution respectively to the column, the retention time of the peaks obtained with the test solution and the reference solution corresponds with each other.

Other requirements Comply with the general requirements for pills (Appendix I A).

Assay Carry out the method for high performance liquid chromatography (Appendix VI D).

Chromatographic system and system suitability Use octadecylsilane bonded silica gel as the stationary phase, and a mixture of methanol, water, and phosphoric acid (65∶35∶0.05) as the mobile phase. As detector a spectrophotometer set at 203 nm. The number of theoretical plates of the column is not less than 4000, calculated with the reference to the peak of eugenol.

Reference solution Weigh accurately 10 mg of eugenol CRS to a 50 ml of volumetric flask, dissolve in methanol to volume, and mix well. Measure accurately 2 ml of the solution, transfer to a 50 ml of volumetric flask, dilute with methanol to volume, and mix well, to produce a solution containing eugenol 8 μg per ml.

Test solution Cut into pieces some of big honeyed pills obtained under the test of weight variation, weigh accurately 0.5 g in a stopper conical flask, add accurately 50 ml of methanol, closely stopper and weigh. Ultrasonicate for 30 minutes (power, 100 W; frequency, 40 kHz), cool, weigh again, replenish the lost weight with methanol, mix well and filter. Measure accurately 2 ml of the successive filtrate, transfer to a 5 ml of volumetric flask, dilute with methanol to volume, mix well and filter, and use the successive filtrate as the test solution.

Procedure Inject accurately 10 μl of each of the reference solution and the test solution into the column respectively and calculate the content.

It contains not less than 13 mg of eugenol ($C_{10}H_{12}O_2$) per pill, referred to Flos Carthami.

Action To resuscitate and resolve *phlegm*, and tranquilize and anchor the *mind*.

Indications Aphasia, coma, excessive phlegm and lockjaw in stroke due to *phlegm* misting the *heart*.

Usage and dosage 1 pill, twice a day, or follow doctor's advice.

Precaution Contraindicated for pregnant women.

Strength 6 g per pill

Storage Preserve in tightly closed containers.

Shixiang Zhitong Wan (十香止痛丸)

Shixiang Zhitong Pills

Ingredients Rhizoma Cyperi (stir-baked with vinegar) 160 g; Radix Linderae 80 g; Lignum Santali Albi 40 g; Rhizoma Corydalis (Stir-baked with vinegar) 80 g; Fructus Citri 80 g; Pollen Typhae 40 g; Lignum Aquilariae Resinatum 10 g; Cortex Magnoliae Officinalis (stir-baked with ginger juice) 80 g; Herba Lysimachiae Foenum-graeci 80 g; Lignum Dalbergiae Odoriferae 40 g; Flos Caryophylli 10 g; Faeces Trogopterori (stir-baked with vinegar) 80 g; Radix Aucklandiae 40 g; Rhizoma et Radix Anisochili 10 g; Fructus Amomi 10 g; Myrrha (stir-baked with vinegar) 40 g; Rhizoma Alpiniae Officinarum 6 g; Radix et Rhizoma Rhei (prepared) 80 g.

Procedure Pulverize the above 18 ingredients to fine powder, sift and mix thoroughly. To each 100 g of the powder add 140-160 g of refined honey to make big honeyed pills.

Description Dark brown big honeyed pills; odour, aromatic; taste, slightly bitter.

Identification (1) Microscopical: Secretory cells subrounded, containing pale yellowish-brown to redish-brown secretions, surrounding cells arranged radially. Crystal cells square or rectangular, walls thickened, lignified and with distinct striations; lumina containing prisms of calcium oxalate. Pollen grains yellow, subrounded or elliptical, about 30 μm in diameter, with reticulated sculptures. Stone cells branched, walls thickened and with distinct striations. Clusters of calcium oxalate large, 60-140 μm in diameter.

(2) Grind 9 g of the pills, cut into pieces, with 5 g of kieselguhr, add 40 ml of ether, heat under reflux for 30 minutes, and filter. Evaporate the filtrate to dryness and dissolve the residue in 1 ml of ethyl acetate as the test solution. Dissolve α-cyperone CRS in ethyl acetate to produce a solution containing 1 mg per ml as the reference solution. Carry out the method for thin layer chromatography (Appendix VI B), using silica gel GF_{254} mixed with sodium carboxymethylcellulose as the coating substance and a mixture of toluene and ethyl acetate (9∶1) as the mobile phase. Apply separately 5 μl of each of the two solutions to the plate. After developing and removal of the plate, dry in air and examine under ultraviolet light at 254 nm. The spot in the chromatogram obtained with the test solution corresponds in position and colour to the spot in the chromatogram obtained with the reference solution.

(3) Grind 9 g of the pills, cut into pieces, with 5 g of kieselguhr, add 40 ml of chloroform, heat under reflux for 30 minutes, and filter. Extract the filtrate with three 20-ml quantities of 2% solution of sodium hydroxide, combine the alkaline liquids, adjust pH value to 1-2 with hydrochloric acid. Extract with three 20-ml quantities of chloroform, combine the chloroform extracts and wash with water. Dehydrate the chloroform extracts with anhydrous sodium sulphate and evaporate to dryness. Dissolve the residue in 0.5 ml of ethyl acetate as the test solution. Dissolve magnolol CRS and honokiol CRS in ethyl acetate to prepare a mixture containing 1 mg of each per ml as the reference solution. Carry out the method for thin layer chromatography (Appendix VI B), using silica gel GF_{254} mixed with sodium carboxymethylcellulose as the coating

substance and a mixture of cyclohexane and ethyl acetate (3∶1) as the mobile phase. Apply separately 3 μl of each of the two solutions to the plate. After developing and removal of the plate, dry in air and examine under ultraviolet light at 254 nm. The spots in the chromatogram obtained with the test solution correspond in position and colour to the spots in the chromatogram obtained with the reference solution.

(4) Heat under reflux 6 g of the pills, cut into pieces, in 20 ml of ethanol for 30 minutes, and filter. Evaporate the filtrate to dryness and dissolve the residue in 20 ml of water. Add 2 ml of hydrochloric acid, heat on a boiling water bath for 30 minutes, cool, extract with two 20-ml quantities of ether. Combine the ether extracts and evaporate to dryness. Dissolve the residue in 1 ml of ethyl acetate as the test solution. Prepare a solution of 0.1 g Radix et Rhizoma Rhei reference drug in the same manner as the reference drug solution. Carry out the method for thin layer chromatography (Appendix Ⅵ B), using silica gel G mixed with sodium carboxymethylcellulose as the coating substance and the upper layer of the mixture of petroleum ether (30-60℃), ethyl formate and formic acid (15∶5∶1) as the mobile phase. Apply separately 5 μl of each of the two solutions to the plate. After developing and removal of the plate, dry in air. The spots in the chromatogram obtained with the test solution correspond in position and colour to the spots in the chromatogram obtained with the reference drug solution. Expose to ammonia vapour, the spots turns red.

Other requirements Comply with the general requirements for pills (Appendix Ⅰ A).

Action To regulate *qi* flow to alleviate stagnation, and disperse cold to kill pain.

Indications Fullness in the hypochondria, stabbing pain in the stomach, or dull pain in the abdomen due to stagnation of *qi* and cold in the stomach.

Usage and dosage 1 pill, twice a day.

Precaution Be cautious about pregnant women.

Strength 6 g per pill

Storage Preserve in tightly closed containers.

Shiyiwei Nengxiao Wan
(十一味能消丸)

Shiyiwei Nengxiao Pills

Shiyiwei Nengxiao Pills are prescription used by Tibetan Nationality.

Ingredients Radix Inulae 30 g; Fructus Sinopodophylli 50 g; Rhizoma Hedychii 40 g; Extractum Hippophae Rhamnoidis 38 g; Fructus Chebulae (removed kernal) 75 g; Musculus Bungari (processed with Moschus) 25 g; Rhizoma et Radix Rhei 90 g; Eriocheir seu Potamon 25 g; Calcitum (calcined) 100 g; Salmiacum 17 g; Trona 125 g.

Procedure Pulverize the eleven ingredients to fine powder, sift and mix thoroughly. Make pills with water and dry.

Description Brownish-yellow to yellowish-brown watered pills; odour, slight; taste, salty, slightly bitter and astringent.

Identification (1) Microscopical: Fibre layers of pericarp pale yellow, crisscrossed obliquely, with thinner and pitted walls; clusters of calcium oxalate large, 60-140 μm in diameter.

(2) To 1 g, in powder, add 5 ml of water, shake and filter, To 1 ml of water add nitric acid to adjust the solution acidic, add 2 drops of silver nitrate TS, a gelatinous precipitate is produced, which is soluble in ammonia TS, but insoluble in nitric acid.

(3) Macerate 2 g of the pills, in powder, in 20 ml of methanol for 1 hour, filter, evaporate the filtrate to dryness. Dissolve the residue in 10 ml of water, add 1 ml of hydrochloric acid, heat under reflux for 30 minutes, cool immediately, extract with two 10-ml quantities of ether, combine the extract, evaporate to dryness, dissolve the residue in 1 ml of chloroform as the test solution. Prepare a solution of 0.5 g of Radix et Rhizoma Rhei reference drug in the same manner as the reference drug solution. Carry out the method for thin layer chromatography (Appendix Ⅵ B), using silica gel G mixed with sodium carboxymethylcellulose as the coating substance and a mixture of *n*-hexane, ethyl acetate and formic acid (6∶2∶0.1) as the mobile phase. Apply separately 4 μl of each of the above two solutions to the plate. After developing and removal of the plate, dry in air. Examine under ultraviolet light at 365 nm, the orange fluorescent spots in the chromatogram obtained with the test solution correspond in position and colour to the spots in the chromatogram obtained with the reference drug solution; exposure to ammonia vapour, examine in sunlight, the spots turn to red colour.

(4) Triturate 4 g of watered pills to fine powder, to a conical flask, add 30 ml of ether. Ultrasonicate for 30 minutes, and filter, and concentrate the filtrate to 2 ml as the test solution. Dissolve alantolactone CRS in ether to produce a solution containing 0.5 mg per ml as the reference solution. Carry out the method for thin layer chromatography (Appendix Ⅵ B), using silica gel G mixed with sodium carboxymethylcellulose as the coating substance and a mixture of petrol ether (60-90℃) and ethyl acetate (17∶3) as the mobile phase. Apply separately 10 μl of the test solution and the reference solution to the plate. After developing and removal of the plate, dry in air. Spray with 5% vanillin in sulfuric acid and heat at 105℃ to the spots clear. The spot in the chromatogram obtained with the test solution corresponds in position and colour to the spot in the chromatogram obtained with the reference solution.

Other requirements Comply with the general requirements for pills except for Disintegration test (Appendix Ⅰ A).

Assay Carry out the method for high performance liquid chromatography (Appendix Ⅵ D).

Chromatographic system and system suitability Use octadecylsilane bonded silica gel as the stationary phase, and a mixture of methanol and 0.1% solution of phosphoric acid (85∶15) as the mobile phase. As detector a spectrophotometer set at 254 nm. The number of theoretical plates of the column is not less than 3000, calculated with the reference to the peak of emodin.

Reference solution Weigh accurately a quantity of emodin CRS and chrysophanol CRS, dissolve in methanol to produce two solutions containing emodin 10 μg per ml and 20 μg chrysophanol per ml seperately.

Test solution With the pills obtained under the test of weight variation, pulverize to fine powder, and weigh accurately 2 g in a stopper conical flask, add accurately 50 ml of methanol, closely stopper and weigh. Heat under reflux on a water bath for 30 minutes, cool, weigh again, replenish the lost weight with methanol, mix well and filter. Measure accurately 5 ml of the successive solution to a conical flask, evaporate the solution to dryness, dissolve the residue in 10 ml of 2.5 mol/L solution of sulfuric acid, ultrasonicate for 5 minutes, add 10 ml of chloroform, heat under reflux for 1 hour, cool immediately, extracted with three 8-ml quantities of chloroform, add a quantity of anhydrous sodium sulphate. Transfer the chloroform

solution to a conical flask, recover chloroform to dryness, add 10 ml of methanol to the residue, weigh, dissolve the residue by heat on a water bath, cool, weigh again, replenish the lost weight with methanol, mix well, and filter. Discard the initial filtrate, and use the successive filtrate as the test solution.

Procedure Inject accurately 10 μl of each of the reference solutions and the test solution into the column respectively and calculate the content.

It contains not less than 1.8 mg of the total amount of emodin ($C_{15}H_{10}O_5$) and chrysophanol ($C_{15}H_{10}O_4$) per pill, referred to Radix et Rhizoma Rhei.

Action To remove blood stasis and promote blood flow, stimulate menstrual discharge, and induce labour.

Indications Amenorrhea, menstrual disorders, difficult labour, retention of placenta, postpartum abdominal pain due to blood stasis.

Usage and dosage Taken with boiled water after crushed. 1-2 pills each time, twice a day.

Precaution Contraindicated in pregnancy.

Strength 1.5 g per pill

Storage Preserve in tightly closed containers, protected from moisture.

Shouwu Wan
(首乌丸)

Shouwu Pills

Ingredients Radix Polygoni Multiflori Praeparata Cum Succo Glycines Sotae 360 g; Radix Rehmanniae 20 g; Radix Achyranthis Bidentatae (processed with wine) 40 g; Fructus Mori 182 g; Fructus Ligustri Lucidi (processed with wine) 40 g; Herba Ecliptae 235 g; Folium Mori (processed) 40 g; Semen Sesami Nigrum 16 g; Semen Cuscutae (processed with wine) 80 g; Fructus Rosae Laevigatae 259 g; Fructus Psoraleae (processed with salt) 40 g; Herba Siegesbeckiae (processed) 80 g; Flos Lonicerae (processed) 20 g.

Procedure Pulverize the above ingredients, except Fructus Mori, Herba Ecliptae and Fructus Rosae Laevigatae, to fine powder, sift, mix thoroughly. Decoct Fructus Mori and Fructus Rosae Laevigatae separately with water twice, 3 hours for the first time and 2 hours for the second; Combine the decoctions, stand for 12 hours, concentrate the supernatants to thin extracts with relative density of 1.35. Decoct Herba Ecliptae with water twice, 1 hour for each time; Combine the decoctions, stand for 12 hours, concentrate the supernatant to a thin extract with a relative density of 1.38. Mix the above fine kinds of powder with the thin extracts of Fructus Mori, Fructus Rosae Laevigatae and part of extract of Herba Ecliptae, 10 g of refined honey and a quantity of water to make water-honeyed pills, dry briefly, coat with the remained extract of Herba Ecliptae and 10 g of refined honey, polish and dry.

Description Black water-honeyed pills; taste, sweet, slightly bitter.

Identification (1) Microscopical: Clusters of calcium oxalate up to about 80 μm in diameter. Parenchymatous tissues greyish-brown, cells mostly shrunken, and each containing a brown, nucleus-like mass. Clusters of calcium oxalate occurring in mesophyll, prisms observed occasionally. Sand crystals of calcium oxalate occurring in parenchymatous cells. Epidermal cells of pericarp subpolygonal in surface view, anticlinal walls uneven in thickness, lumina containing pale brown contents. Epidermal cells of testa pale yellow, polygonal in surface view, anticlinal walls 6-10 μm in thickeness, lignified, lumina containing subrounded crystals of calcium oxalate. Palisade cells of testa 2 rows, the inner row longer than the outer one, with light line. Palisade cells of testa pale brown or reddish-brown, polygonal in surface view, walls slightly thickened, containing reddish-brown contents. Non-glandular hairs 3-4 celled, one cell often slightly shrunken. Pollen grains subrounded, up to about 76 μm in diameter, extine with spine-like sculptures and three germinal apertures.

(2) Pulverize 2 g to powder, ultrasonicate in 20 ml of methanol for 15 minutes, wash the residue with a small quantity of methanol, filter, combine the filtrate and adjust the solution to 20 ml, evaporate 10 ml of the filtrate to dryness. Dissolve the residue in 1 ml of chloroform as the test solution. Prepare a solution of 2 g of Radix Polygoni Multiflori reference drug in the same manner as the reference drug solution. Dissolve emodin CRS and physcion CRS in methanol to prepare a mixture containing 1 mg of each per ml as the reference solution. Carry out the method for thin layer chromatography (Appendix Ⅵ B), using silica gel G as the coating substance mixed with 0.5% solution of sodium hydroxide and a mixture of toluene, ethyl acetate and formic acid (15∶2∶1) as the mobile phase. Apply 2 μl of each of the three solutions to the plate. After developing and removal of the plate, dry in air, examine under ultraviolet light at 365 nm. The orange fluorescent spots in the chromatogram obtained with the test solution correspond in position and colour to the spots in the chromatograms obtained with the reference drug solution and the reference solution. The colour of the spots turns to red on exposure to ammonia vapour.

(3) Evaporate 10 ml of the methanol extract obtained under Identification (2) to dryness, dissolve the residue in 2 ml of ethyl acetate. Apply the solution to a column packed with neutral aluminium oxide (100-120 mesh, 3 g, 1 cm in internal diameter), elute with 10 ml of ethyl acetate, evaporate the eluate to dryness, dissolve the residue in 0.5 ml of ethyl acetate as the test solution. Dissolve psoralen CRS and isopsoralen CRS separately in methanol to prepare two solutions containing 0.2 mg of each per ml as the reference solutions. Carry out the method for thin layer chromatography (Appendix Ⅵ B), using silica gel G as the coating substance and a mixture of *n*-hexane and ethyl acetate (4∶1) as the mobile phase. Apply separately 2 μl of each of the three solutions to the plate. After developing and removal of the plate, dry in air, spray with 10% solution of potassium hydroxide and examine under ultraviolet light at 365 nm. The fluorescent spots in the chromatogram obtained with the test solution correspond in position and colour to the spots in the chromatogram obtained with the reference solutions.

Other requirements Comply with the general requirements for pills (Appendix Ⅰ A).

Action To reinforce the liver and kidney, tone up the muscles and bones and blacken beard and hair.

Indications Dizziness, tinnitus, aching of the lower back, numbness of limbs, and early graying of beard and hair due to deficiency in the liver and kidney; hyperlipemia with above symptoms.

Usage and dosage 6 g, twice a day.

Storage Preserve in tightly closed containers.

Shuangdan Koufuye
(双丹口服液)

Shuangdan Mixture

Ingredients Radix et Rhizoma Salviae Miltiorrhizae 600 g; Cortex Moutan 300 g.

Procedure Distill volatile oil of Cortex Moutan, collect the distillation in another container. Decoct the drug residue and Radix et Rhizoma Salviae Miltiorrhizae with water twice, 2 hours for the first time and 1 hours for the second time, combine the decoctions and filter. Concentrate the filtrate to a relative density of 1.14-1.16 (60℃), add ethanol to a content of 60%, stir thoroughly and stand for 24 hours, filter and recover ethanol and concentrate to a thick extract with a relative density of 1.14-1.16 (60℃). Add the distillation of Cortex Moutan and water to about 900 ml, stir thoroughly, allow it to stand for 48 hours, filter, add 150 g of honey, 3 g of sodium benzoate into the filtrate, and add water to 1000 ml, stir thoroughly and pack.

Description A reddish-brown liquid; taste, pungent and slightly bitter.

Identification Extract 20 ml of the mixture with three 10-ml quantities of ether, collect the ether extracts, evaporate to dryness at a lower temperature. Dissolve the residue in 1 ml of acetone as the test solution. Dissolve paeonol CRS in acetone to produce a solution containing 1 mg per ml as the reference solution. Carry out the method for thin layer chromatography (Appendix Ⅵ B), using silica gel G as the coating substance, and a mixture of cyclohexane and ethyl acetate (3∶1) as the mobile phase. Apply separately 10 μl of each of the two solutions to the plate. After developing and removal of the plate, dry in air. Spray with 5% ferric chloride in ethanol, and heat to the spots clear. The spot in the chromatogram obtained with test solution corresponds in position and colour to the spot in the chromatogram obtained with the reference solution.

Relative density Not less than 1.05 (Appendix Ⅶ A).

pH value 4.0-5.0 (Appendix Ⅶ G).

Other requirements Comply with the general requirements for mixtures (Appendix Ⅰ J)

Assay Carry out the method for high performance liquid chromatography (Appendix Ⅵ D).

Chromatographic system and system suitability Use octadecylsilane bonded silica gel as the stationary phase, and a mixture of methanol and 1% solution of acetic acid (8∶92) as the mobile phase. As detector a spectrophotometer set at 280 nm. The number of theoretical plates of the column is not less than 2000, calculated with the reference to the peak of danshensu.

Reference solution Weigh accurately a quantity of sodium danshensu CRS, dissolve in methanol to produce a solution containing 40 μg per ml (correspond to 36 μg danshensu per ml).

Test solution Measure accurately 5 ml of the mixture and transfer to a 50 ml volumetric flask, add water to volume, and mix well. Measure accurately 10 ml of the solution and transfer to a 50 ml volumetric flask, add water to volume. Mix well and filter, use the successive filtrate as the test solution.

Procedure Inject accurately 10 μl of each of the reference solution and the test solution into the column respectively and calculate the content.

It contains not less than 2.0 mg of danshensu ($C_9H_{10}O_5$) per ml, referred to Radix et Rhizoma Salviae Miltiorrhizae.

Action To promote blood circulation to resolve stagnated blood and dredge meridians to kill pain.

Indications Impeded flow of *yang-qi* in the chest due to stagnated blood with manifestations of constriction in the chest and heart pain.

Usage and dosage 20 ml, twice a day.

Strength 10 ml per phial

Storage Preserve in tightly closed containers.

Shuanghuanglian Keli
(双黄连颗粒)

Shuanghuanglian Granule

Ingredients Flos Lonicerae Japonicae 1500 g; Radix Scutellariae 1500 g; Fructus Forsythiae 3000 g.

Procedure Decoct Radix Scutellariae with water for 3 times, 2 hours for the first time, 1 hour for the second and third time respectively, combine the decoctions, filter, concentrate the filtrate to a thin extract with a relative density of 1.05-1.10 (80℃), adjust pH value to 1.0-2.0 with 2 mol/L solution of hydrochloric acid at a temperature of 80℃, keep the temperature for 1 hour, allow to stand for 24 hours, filter, wash the precipitate with water to pH 5.0, continue to wash with 70% ethanol to pH 7.0, dry at a lower temperature to obtain the reserved extract. Macerate warmly Flos Lonicerae Japonicae and Fructus Forsythiae in water for half an hour, decoct for 2 times, 1.5 hours every time, filter separately, combine the filtrate and concentrate to a thick extract with a relative density of 1.20-1.25 (70-80℃), cool to 40℃, gently add ethanol, stir constantly to a content of 75% ethanol, stir thoroughly, allow to stand for 12 hours, filter to obtain the supernatant liquid, stir well the precipitate in a quantity of 75% ethanol, allow to stand for 12 hours, filter, combine the ethanol liquid, completely recover ethanol, concentrate to a thick extract with a relative density of 1.30-1.32 (60-65℃), dry in vacuum, combine with the above reserved extract and pulverize to fine powder, add a quantity of excipient including dextrin, mix thoroughly, make granules, dry and make to 1000 g; or add a quantity of excipient including sucrose and dextrin, mix thoroughly, make granules, dry and make to 2000 g.

Description brownish-yellow granules; odourless; taste, bitter and slightly sweet.

Identification (1) Dissolve 1 g or 2 g (granules with sucrose) in 10 ml of 75% ethanol on a water bath, filter, use the filtrate as the test solution. Dissolve respectively chlorogenic acid CRS and baicalin CRS in 75% ethanol to produce two solutions containing 0.1 mg each per 1 ml as the reference solutions. Carry out the method for thin layer chromatography (Appendix Ⅵ B), using polyamide membrane as the coating substance and acetic acid as the mobile phase. Apply separately 1-2 μl of each of the above three solutions to the membrane. After developing and removal of the membrane, dry in air, examine under ultraviolet light at 365 nm. The fluorescence spots in the chromatogram obtained with the test solution correspond in position and colour to the spots in the chromatogram obtained with the reference solutions.

(2) Dissolve 0.5 g or 1 g (granules with sucrose) in 10 ml of methanol by heating on a water bath, filter, use the

filtrate as the test solution. Heat under reflux 0.5 g of Fructus Forsythiae reference drug in 10 ml of methanol for 20 minutes, filter, and use the filtrate as the reference drug solution. Carry out the method for thin layer chromatography (Appendix Ⅵ B), using silica gel G mixed with sodium carboxymethylcellulose as the coating substance and a mixture of chloroform and methanol (5∶1) as the mobile phase. Apply separately 5 μl of each of the above two solutions to the plate. After developing and removal of the plate, dry in air. Spray with 10% sulfuric acid in ethanol, heat at 105℃ for several minutes. The spots in the chromatogram obtained with the test solution correspond in position and colour to the spots in the chromatogram obtained with the reference drug solution.

Other requirements Comply with general requirements for granules (Appendix Ⅰ C).

Assay Carry out the method for high performance liquid chromatography (Appendix Ⅵ D).

Chromatographic system and system suitability Use octadecylsilane bonded silica gel as the stationary phase and a mixture of methanol, water and acetic acid (50∶50∶1) as the mobile phase. As detector a spectrophotometer set at 274 nm. The number of the theoretical plates of the column is not less than 1500, calculated with reference to the peak of baicalin.

Reference solution Dissolve a quantity of baicalin CRS, accurately weighted, in 50% methanol to produce a solution containing 0.1 mg per ml.

Test solution Weigh accurately 0.5 g or 1 g (granules with sucrose), obtained in the test of weight variation, and triturated to fine powder, in a 100 ml volumetric flask, add a quantity of 50% methanol, ultrasonicate for 20 minutes to dissolve, stand to room temperature, dilute with 50% methanol to the volume, shake well, filter, discard the initial filtrate, measure accurately 5 ml of the successive filtrate to a 10 ml volumetric flask, dilute with 50% methanol to the volume and mix well.

Procedure Inject accurately 5 μl of each of the reference and the test solution into the column and calculate the content.
It contains not less than 160 mg or 80 mg (granules with sucrose) of baicalin ($C_{21}H_{18}O_{11}$) per pack, referred to Radix Scutellariae.

Action To disperse *wind* to release the exterior, and clear *heat* to relieve *toxicity*.

Indications Common cold due to affliction from external *wind-heat* with manifestations of fever, coughing and sore throat.

Usage and dosage Taken after dissovled in boiled water 5 g, 3 times a day; 1.0-1.5 g, for the infants under 6 months; 1.5-2.0 g, for infants of 6-12 months; 2.0-2.5 g, for children of 1-3 years old; appropriate reduction of dosage or follow doctor's advice for children over 3 years old.

Strength 5 g per pack.
(1) Granules without sucrose (equivalent to 60 g crude drugs);
(2) Granules with sucrose (equivalent to 30 g crude drugs)

Storage Preserve in well closed containers.

Shuanghuanglian Koufuye (双黄连口服液)

Shuanghuanglian Mixture

Ingredients Flos Lonicerae Japonicae 375 g; Radix scutellariae 375 g; Fructus Forsythiae 750 g.

Procedure Cut Radix Scutellariae into slices, decoct with water for 3 times, 2 hours for the first time, 1 hour for the second and third time respectively, combine the decoctions, filter, concentrate the filtrate, adjust pH value to 1.0-2.0 with a quantity of 2 mol/L solution of hydrochloric acid at a temperature of 80℃, keep the temperature for 1 hour, allow to stand for 12 hours, filter. Stir the precipitate in 6-8 times amount of water, adjust to pH value to 7.0 with 40% solution of sodium hydroxide and add a equal quantity of ethanol to dissolve by stirring, filter, adjust the filtrate to pH value to 2.0 with 2 mol/L solution of hydrochloric acid at a temperature of 60℃, keep the temperature for 30 minutes, allow to stand for 12 hours, filter, wash the precipitate with ethanol to pH value to 7.0, completely expel ethanol to obtain the reserved extract. Macerate warmly Flos Lonicerae Japonicae and Fructus Forsythiae in water for half an hour, decoct for 2 times, 1.5 hours for each, combine the decoctions, filter, concentrate the filtrate to a thin extract with a relative density of 1.20-1.25 (70-80℃), allow to cool to 40℃, gently add ethanol, stir constantly, to a content of 75% ethanol, stir thoroughly, allow to stand for 12 hours, filter to obtain the supernatant liquid, stir well the residue in a quantity of 75% ethanol solution, allow to stand for 12 hours, filter, combine the ethanol liquid, completely recover ethanol, add the above reserved extract and a quantity of water, adjust to pH value to 7.0 with 40% solution of sodium hydroxide, stir well, refrigerate for 72 hours under 4-8℃, filter, dissolve 300 g of sucrose in the filtrate by stirring, add a quantity of essence and adjust to pH value to 7.0, add water to produce 1000 ml, stir well, allow to stand for 12 hours, filter, pack and sterilize.

Description A clear, brownish-red liquid; taste, sweet and slightly bitter.

Identification (1) Mix well 1 ml of the mixture with 5 ml of 75% ethanol as the test solution. Dissolve respectively chlorogenic acid CRS and baicalin CRS in 75% ethanol to produce two solutions containing 0.1 mg per ml as the reference solutions. Carry out the method for thin layer chromatography (Appendix Ⅵ B), using polyamide membrane as the coating substance and acetic acid as the mobile phase. Apply separately 1-2 μl of each of the above three solutions to the membrane. After developing and removal of the membrane, dry in air, examine under ultraviolet light at 365 nm. The fluorescence spots in the chromatogram obtained with the reference solution correspond in position and colour to the spots in the chromatogram obtained with the reference solutions.
(2) Dissolve 1 ml of the mixture in 5 ml of methanol with shaking, allow to stand, use the supernatant liquid as the test solution. Heat under reflux 0.5 g of Fructus Forsythiae reference drug with 10 ml of methanol for 20 minutes, filter, use the filtrate as the reference drug solution. Carry out the method for thin layer chromatography (Appendix Ⅵ B), using silica gel G mixed with sodium carboxymethylcellulose as the coating substance and a mixture of chloroform and methanol (5∶1) as the mobile phase. Apply separately 5 μl of each of the above two solutions to the plate. After

developing and removal of the plate, dry in air. Spray with 10% sulfuric acid in ethanol, heat at 105℃ for several minutes. The spots in the chromatogram obtained with the test solution correspond in position and colour to the spots in the chromatogram obtained with the reference drug solution.

pH value 5.0-7.0 (Appendix Ⅶ G).

Relative density Not less than 1.12 (Appendix Ⅶ A).

Other requirements Comply with the general requirements for mixtures (Appendix Ⅰ J).

Assay ***Radix Scutellariae*** Carry out the method for high performance liquid chromatography (Appendix Ⅵ D).

Chromatographic system and system suitability Use octadecylsilane bonded silica gel as the stationary phase and a mixture of methanol, water and acetic acid (50∶50∶1) as the mobile phase. As detector a spectrophotometer set at 274 nm. The number of theoretical plates of the column is not less than 1500, calculated with reference to the peak of baicalin.

Reference solution Weigh accurately 10 mg of baicalin CRS, in a 100 ml volumetric flask, add a quantity of 50% methanol, shake to dissolve on a water bath, stand to room temperature, dilute with 50% methanol to the volume and mix well (containing 0.1 mg of baicalin per ml).

Test solution Measure accurately 1 ml of the mixture, obtained in the test of filling variation, in a 50 ml volumetric flask, add a quantity of 50% methanol, ultrasonicate for 20 minutes, stand to room temperature, dilute with 50% methanol to the volume and mix well.

Procedure Inject accurately 5 μl of each of the reference solution and the test solution into the column and calculate the content.
It contains not less than 8.0 mg of baicalin ($C_{21}H_{18}O_{11}$) per ml, referred to Radix Scutellariae.

Flos Lonicerae Japonicae Carry out the method for high performance liquid chromatography (Appendix Ⅵ D).

Chromatographic system and system suitability Use octadecylsilane bonded silica gel as the stationary phase and a mixture of methanol, water and acetic acid (20∶80∶1) as the mobile phase. As detector a spectrophotometer set at 324 nm. The number of theoretical plates of the column is not less than 6000, calculated with reference to the peak of chlorogenic acid.

Reference solution Dissolve a quantity of chlorogenic acid CRS, accurately weighted, in water in an amber volumetric flask to produce a solution containing 40 μg per ml.

Test solution Measure accurately 2 ml of the mixture in a 50 ml amber volumetric flask, add water to the volume and mix well.

Procedure Inject accurately 10 μl of the reference solution and 10-20 μl of the test solution into the column and calculate the content.
It contains not less than 0.60 mg of chlorogenic acid ($C_{16}H_{18}O_9$) per ml, referred to Flos Lonicerae Japonicae.

Fructus Forsythiae Carry out the method for high performance liquid chromatography (Appendix Ⅵ D).

Chromatographic system and system suitability Use octadecylsilane bonded silica gel as the stationary phase and a mixture of acetonitrile and water (25∶75) as the mobile phase. As detector a spectrophotometer set at 278 nm. The number of theoretical plates of the column is not less than 6000, calculated with reference to the peak of forsythin.

Reference solution Dissolve a quantity of forsythin CRS, accurately weighted, in 50% methanol to produce a solution containing 60 μg per ml.

Test solution Measure accurately 1 ml of the mixture, apply to a column packed with neutral aluminium oxide (100-200 mesh, 6 g, 1 cm in inner diameter), elute with 40 ml of 70% ethanol and collect the elute. Evaporate to the dryness and dissolve the residue in a quantity of 50% methanol to a 5 ml volumetric flask, and dilute to the volume and mix well.

Procedure Inject accurately 10 μl of each of the reference solution and the test solution into the column, and calculate the content.
It contains not less than 0.30 mg of forsythin ($C_{29}H_{36}O_{15}$) per ml, referred to Fructus Forsythiae.

Action To disperse *wind* to release the exterior, and clear *heat* to relieve *toxicity*.

Indications Common cold due to affliction from external *wind-heat* with manifestations of fever, coughing and sore throat.

Usage and dosage 20 ml, 3 times a day; appropriate reduction of the dosage or follow doctor's advice for children.

Strength 10 ml per phial

Storage Preserve in tightly closed containers, protected from light, and store in a dark and cool place.

Shuanghuanglian Pian
(双黄连片)

Shuanghuanglian Tablets

Ingredients Fructus Forsythiae 3750 g; Flos Lonicerae Japonicae 1875 g; Radix Scutellariae 1875 g.

Procedure Slice Radix Scutellariae, and decoct it with water three times, 2 hours for the first time and 1 hour for the second and third times. Combine the decoctions and filter. Concentrate the decoction to a relative density of 1.03-1.08 (80℃), adjust pH value to 1.0-2.0 with 2 mol/L solution of hydrochloric acid at 80℃. Dry at low temperature for use. Macerate Flos Lonicerae Japonicae, Fructus Forsythiae warm with water for half an hour, decoct it with water twice, 1.5 hours for each time. Combine the decoctions and filter. Concentrate the filtrate to a relative density of 1.20-1.25 (80℃), cool to 40℃. Add ethanol to a content of 75% ethanol, stir thoroughly and stand by for 12 hours, and filter. Separate the supernatant, and add 75% ethanol to the residue, stir thoroughly, stand by for 12 hours, filter. Combine the two filtrates, recover ethanol to no ethanol smell and concentrate to a thick extract with a relative density of 1.34-1.40 (60℃). Dry in vaccum, and add extract of Radix Scutellariae, pulverize to fine power, add microcrystalline cellulose and sodium cellulose glycolate, mix thoroughly, make granules and dry. Add magnesium stearate, mix thoroughly, compress into 1000 tablets, and coated with film or sugar.

Description Film coated or sugar coated tablets with brownish-yellow or brownish-red core; odour, slight; taste, bitter.

Identification (1) Triturate 1 tablet, removed film coat, to fine powder, add 10 ml of 75% methanol, ultrasonicate for 10 minutes, and filter. Use the filtrate as the test solution. Dissolve separately baicalin CRS and chlorogenic acid CRS in methanol to produce two solutions each containing 0.1 mg per ml as the reference solutions. Carry

out the method for thin layer chromatography (Appendix Ⅵ B), using polyamide membrane as the coating substance and acetic acid as the mobile phase. Apply separately 1-2 μl of the above solutions to the membrane. After developing and removal of the membrane, dry in air and examine under ultraviolet light at 365nm. The fluorescent spots in the chromatogram obtained with the test solution correspond in position and colour to the spots in the chromatogram obtained with the reference solutions.

(2) To 0.5 g Fructus Forsythiae reference drug, add 10 ml of methanol, heat under reflux for 20 min, filter and use the filtrate as reference drug solution. Carry out the method for thin layer chromatography (Appendix Ⅵ B), using silica gel G mixed with sodium carboxymethylcellulose, as the coating substance, and a mixture of chloroform and methanol (5∶1) as the mobile phase. Apply separately 5 μl of each of the test solution obtained under Identification (1) and the reference solution to the plate. After developing and removal of the plate, dry in air. Spray with a 10% solution of sulfuric acid in ethanol, and heat at 105℃ to spots clear. The spots in the chromatogram obtained with the test solution correspond in position and colour to the spots in the chromatogram obtained with the reference drug solution.

Other requirements Comply with the general requirements for tablets (Appendix Ⅰ D).

Assay ***Radix Scutellariae*** Carry out the method for high performance liquid chromatography (Appendix Ⅵ D).

Chromatographic system and system suitability Use octadecylsilane bonded silica gel as the stationary phase, and a mixture of methanol, water, and glacial acetic acid (50∶50∶1) as the mobile phase. As detector a spectrophotometer set at 274 nm. The number of theoretical plates of the column is not less than 1500, calculated with the reference to the peak of baicalin.

Reference solution Weigh accurately a quantity of baicalin CRS, dissolve in 50% solution of methanol to produce a solution containing 0.1 mg per ml.

Test solution Weigh accurately 0.2 g of the tablets, obtained under the test of weight variation, pulverized to fine powder, place in a 50 ml volumetric flask, add a quantity of 50% solution of methanol. Ultrasonicate for 20 minutes (power, 250 W; frequency, 33 kHz), cool, add 50% solution of methanol to volume, mix well and filter. Discard the initial filtrate, and transfer accurately 2 ml of the successive filtrate to a 10 ml volumetric flask, add 50% solution of methanol to volume, mix well and filter. Discard the initial filtrate, and use the successive filtrate as the test solution. The whole process should be protected from light.

Procedure Inject accurately 5 μl of each of the reference solution and the test solution into the column respectively and measure.

It contains not less than 50 mg of baicalin ($C_{21}H_{18}O_{11}$) per tablet, referred to Radix Scutellariae.

Flos Lonicerae Japonicae Carry out the method for high performance liquid chromatography (Appendix Ⅵ D).

Chromatographic system and system suitability Use octadecylsilane bonded silica gel as the stationary phase, and a mixture of methanol, water, and glacial acetic acid (15∶85∶1) as the mobile phase. As detector a spectrophotometer set at 324 nm. The number of theoretical plates of the column is not less than 6000, calculated with the reference to the peak of chlorogenic acid.

Reference solution Weigh accurately a quantity of baicalin CRS in a amber volumetric flask, dissolve in 50% solution of methanol to produce a solution containing 60 μg per ml.

Procedure Inject accurately 10 μl of each of the reference solution and the test solution, obtained under Assay of Radix Scutellariae, into the column respectively and calculate the content.

It contains not less than 5.5 mg of chlorogenic acid ($C_{16}H_{18}O_9$) per tablet, referred to Flos Lonicerae Japonicae.

Action To disperse *wind* to release the exterior, and clear *heat* to relieve *toxicity*.

Indications Common cold due to affliction from external *wind-heat* with manifestations of fever, coughing and sore throat.

Usage and dosage 4 tablets, 3 times a day, appropriate reduction of dosage for children or follow doctor's advice.

Strength 0.50 g per core

Storage Preserve in tightly closed containers.

Shuanghuanglian Shuan (双黄连栓)

Shuanghuanglian Suppositories

Ingredients Flos Lonicerae Japonicae 2500 g; Radix Scutellariae 2500 g; Fructus Forsythiae 5000 g.

Procedure Decoct Radix Scutellariae with water for 3 times, 2 hours for the first time and each 1 hour for other times. Combine the decoctions, filter and concentrate the filtrate to a quantity, adjust pH value to 1.0-2.0 at 80℃ with 2 mol/L solution of hydrochloric acid, keep the temperature for 1 hour, stand for 24 hours and filter. Add 6-8 quantities of water to the precipitate, adjust pH value to 7.0-7.5 with a 40% solution of sodium hydroxide, then add the equal quantity of ethanol, stir to dissolve and filter. Adjust the pH of the filtrate to 2.0 with 2 mol/L solution of hydrochloric acid, keep temperature at 60℃ for 30 minutes, stand for 12 hours and filter. Wash the precipitate with water to pH 5.0, rinse with 70% ethanol pH value to 7.0. Add a quantity of water to the precipitate, adjust to pH 7.0-7.5 with a 40% solution of sodium hydroxide and stir to dissolve. Decoct Flos Lonicerae Japonicae and Fructus Forsythiae with water twice, 1.5 hours for each time, combine the decoctions, filter and concentrate to a thick extract with a relative density of 1.20-1.25 (70-80℃). Cool to 40℃, add ethanol slowly to a content of 75% ethanol, stand for 12 hours. Separate and filter the supernatant, recover ethanol from the filtrate and concentrate to a quantity, add ethanol again to a content of 85% ethanol, stir thoroughly and stand for 12 hours. Separate the supernatant, filter, recover ethanol from the filtrate until the odour of ethanol is no longer detectable, add the solution of Radix Scutellariae, stir well and adjust to pH 7.0-7.5. Concentrate in vacuum to a thick extract, dry at lower temperature and pulverize. Heat 780 g of semi-synthetic fatty acid ester to melt, mix at temperature of 38-42℃ with the above powder, pour into moulds and make 1000 suppositories.

Description Brown or dark brown suppositories.

Identification To 1 suppository add 20 ml of water, adjust pH value to 7.0-7.5 with 10% solution of sodium hydroxide, heat on a warm water bath to melt, then leave it in a cool place until the suppository bases is solidified and filter. To 1 ml of the filtrate add 4 ml of dehydrated ethanol, shake on a water bath for several minutes, allow to stand and use the supernatant as the test solution. Dissolve chlorogenic acid CRS and baicalin CRS in ethanol to produce a mixture containing 0.4 mg of each per ml as the reference solution.

Carry out the method for thin layer chromatography (Appendix Ⅵ B), using silica gel G mixed with sodium carboxymethylcellulose as the coating substance and the upper layer of a mixture of butyl acetate, formic acid and water (7∶4∶3) as the mobile phase. Apply separately 3-5 μl of each of the three solutions to the plate. Pre-equilibriate the plate in a chamber with the mobile phase for 30 minutes. After developing and removal of the plate, dry in air and examine under ultraviolet light at 365 nm. The fluorescent spots in the chromatogram obtained with the test solution correspond in position and colour to the spots in the chromatogram obtained with the reference solutions.

Other requirements Comply with the general requirements for suppositories (Appendix Ⅰ W).

Assay Carry out the method for high performance liquid chromatography (Appendix Ⅵ D).

Chromatographic system and system suitability Use octadecylsilane bonded silica gel as the stationary phase and a mixture of methanol, water, and glacial acetic acid (40∶60∶1) as the mobile phase. As detector a spectrophotometer set at 276 nm. The number of theoretical plates of the column is not less than 1000, calculated with reference to the peak of baicalin.

Reference solution Dissolve a quantity of baicalin CRS, accurately weighted, in 50% methanol to produce a solution containing 0.1 mg per ml as the reference solution.

Test solution Weigh accurately 10 suppositories and pulverize. Transfer about 0.3 g weighed accurately to a beaker, dissolve in 40 ml of water on a warm water bath. Adjust pH to 7.0-7.5 with a 10% solution of sodium hydroxide, then transfer to a 50 ml volumetric flask, allow to cool to room temperature, dilute with water to volume, mix well and filter. Measure accurately 2 ml of the successive filtrate, transfer to a 10 ml volumetric flask, dilute with water to volume and mix well.

Procedure Accurately inject 20 μl of each of the reference solution and the test solution into the column and calculate the content.

It contains not less than 65 mg of baicalin ($C_{21}H_{18}O_{11}$) per suppository, refered to Radix Scutellaria.

Action To disperse *wind* to release the exterior, and clear *heat* to relieve *toxicity*.

Indications Common cold due to affliction from external *wind-heat* with manifestations of fever, coughing, sore throat; upper respiratory tract infection and pneumonia with above symptoms.

Usage and dosage 1 suppository for child, 2-3 times a day, to be administrated through rectal.

Strength 1.5 g per suppository

Storage Preserve in tightly closed containers, stored in a cool and dry place.

Shufeng Dingtong Wan
(疏风定痛丸)

Shufeng Dingtong Pills

Ingredients Semen Strychni Pulveratum 200 g, Herba Ephedrae 300 g; Olibanum (processed with vinegar) 100 g; Myrrha (processed with vinegar) 100 g; Rhizoma Homalomenae 30 g; Pyritum (calcined) 30 g; Cortex Illicii 30 g; Ramulus Cinnamoni 30 g; Radix Achyranthis Bidentatae 30 g; Fructus Chaenomelis 30 g; Radix et Rhizoma Glycyrrhizae 30 g; Cortex Eucommiae (Processed with salt) 30 g; Radix Saposhnikoviae 30 g; Rhizoma et Radix Notopterygii 30 g; Radix Angelicae Pubescentis 30 g.

Procedure Except Semen Strychni pulveratum, the other fourteen ingredients to fine powders and sift. Triturate the Semen Strychni pulveratum with the other powder and mix thoroughly. To each 100 g of the powder add 140-160 g of refined honey to make big honeyed pills. Description Greyish-black big honeyed pills; odour, pungent and aromatic; taste, bitter and sour.

Identification (1) Microscopical: Stomata characteristic, guard cells dumbbell-shaped in lateral view. Stone cells large, subtriangular, ellipsoidal or irregular, 198-253 μm in diameter, with thickened walls and distinct striations, lumina containing dark red substances.

(2) Cut 3 g of the pills well with a quantity of kieselguhr. Add 1 ml of concentrated ammonia TS and 30 ml of chloroform, ultrasonicate for 30 minutes, and filter. Extract the filtrate twice with 30 ml of sulfuric acid solution (3→100), combine the sulfuric acid extracts, adjust with concentrated ammonia TS to alkaline. Then extract with 30 ml of chloroform for two times, combine the chloroform extracts, evaporate to dryness. Dissolve the residue in 5 ml of chloroform as the test solution. Dissolve strychnine CRS in chloroform to produce a solution containing 0.4 mg per ml as the reference solution. Carry out the method for thin layer chromatography (Appendix Ⅵ B), using silica gel GF_{254} mixed with sodium carboxymethylcellulose as the coating substance and the upper layer of the mixture of toluene, acetone, ethanol and concentrated ammonia TS (16∶12∶1∶4) as the mobile phase. Apply separately 5-10 μl of each of the two solutions to the plate. After developing and removal of the plate, dry in air and examine under ultraviolet light at 254 nm. The spot in the chromatogram obtained with the test solution corresponds in position and colour to the spot in the chromatogram obtained with the reference solution.

Other requirements Comply with the general requirements for pills (Appendix Ⅰ A).

Assay Carry out the method for high performance liquid chromatography (Appendix Ⅵ D).

Chromatographic system and system suitability Use octadecylsilane bonded silica gel as the stationary phase and a mixture of acetonitrile and a mixture of equal quantity of 0.01 mol/L sodium heptanesulfonate solution and 0.02 mol/L potassium dihydrogen phosphate solution (adjust to pH 2.8 with 10% phosphoric acid solution) (21∶79) as the mobile phase. As detector a spectrophotometer set at 280 nm. The number of theoretical plates of the column is not less than 5000, calculated with the reference to the peak of strychnine.

Reference solution Dissolve 6 mg of strychnine CRS, accurately weighted, in a 10 ml volumetric flask and dilute with chloroform to volume, and mix well. Accurately measure 2 ml in a 10 ml volumetric flask, dilute with methanol to volume, and mix well (containing 0.12 mg of strychnine per ml).

Test solution Weigh accurately 5 g of the pills, obtained under the test of weight variation, in a stopper conical flask, add 3 ml of sodium hydroxide TS, mix well, stand for 30 minutes, add accurately 25 ml of Chloroform, weigh, heat under reflux for 2 hours, allow to cool and weigh again. Replenish the loss of weight with chloroform and mix well. Filter with filter paper spread with small quantity of anhydrous sodium sulfate, measure accurately 10 ml of the filtrate in a separator, extract with successive quantities of 15 ml, 15 ml, 10 ml, 10 ml and 10 ml of 1% solution of sulphuric acid. Combine the acid solution, adjust pH value

to 10-11 with 30% solution of sodium hydrate, extract with successive quantities of 20 ml, 20 ml, 15 ml, 15 ml and 15 ml of chloroform, combine the chloroform extract, evaporate to dryness in vacuum, dissolve the residue with methanol, transfer to a 10 ml volumetric flask, dilute to volume and mix well, filter and take the filtrate.

Procedure Inject accurately 10 μl of each of the reference solution and the test solution into the column and calculate the content.

It contains not less than 3.3 mg and no more than 4.1 mg of strychnine ($C_{21}H_{22}N_2O_2$) per pill, referred to Semen Strychni.

Action To expel *wind* and disperse *cold*, and promote blood circulation to kill pain.

Indications Obstruction of *qi* and blood with pain due to accumulation of *wind*, cold and *dampness* and blood stasis blocking meridians, with manifestations of pain or cold pain or pricking pain of joints, or severe pain with immobilization, local aversion to *cold*, or pain of the lower back and legs, numbness of limbs and local swelling caused by traumatic injuries.

Usage and dosage 1 pill, twice a day.

Precaution Avoid overdosage; be cautious about debilitated patients; it is forbidden to prescribe to pregnant women.

Strength 6 g per pill

Storage Preserve in tightly closed containers.

Shugan Hewei Wan (舒肝和胃丸)

Shugan Hewei Pills

Ingredients Rhizoma Cyperi (processed with vinegar) 45 g; Radix Paeoniae Alba 45 g; Fructus Citri Sarcodactylis 150 g; Radix Aucklandiae 45 g; Radix Curcumae 45 g; Rhizoma Atractylodis Macrocephalae (stir-baked) 60 g; Pericarpium Citri Reticulatae 75 g; Radix Bupleuri 15 g; Herba Pogostemonis 30 g; Radix et Rhizoma Glycyrrhizae Praeparata Cum Melle 15 g; Semen Raphani 45 g; Semen Arecae (stir-baked to charred) 45 g; Radix Linderae 45 g.

Procedure Pulverize the above thirteen ingredients to fine powder, sift and mix thoroughly. To each 100 g of the powder add 70-85 g of refined honey and a quantity of water to make water-honeyed pills and dry; or add 120-130 g of refined honey to make big honeyed pills.

Description Dark brown or brownish-black water-honeyed pills or big honeyed pills; odour, characteristic; taste, sweet.

Identification (1) Microscopical: Fibre bundles surrounded by parenchymatous cells containing prisms of calcium oxalate, forming crystal fibres. Needle crystals of calcium oxalate fine, 10-32 μm long, irregularly filling in parenchymatous cells. Clusters of calcium oxalate 18-32 μm in diameter, occurring in parenchymatous cells, often arranged in rows, or several in one cell. Wood fibres long fusiform, 16-24 μm in diameter, walls slightly thickened, pit aperturoid transverse-cracked, cross-shaped, or V-shaped. Prisms of calcium oxalate abundant in parenchyma. Fragments of endosperm cells colourless, walls relatively thickened with numerous large subrounded pits. Secretory cells subrounded, containing pale yellowish-brown to reddish-brown secretion, surrounded by radially arranged cells. Vittae containing pale yellow or yellowish-brown strip-shaped secretion, 8-25 μm in diameter. Palisade cells of testa yellow or brownish-red, surface view polygonal, with thickened walls.

(2) Triturate 7 g of the water-honeyed pills to powder, or grind 9 g of the big honeyed pills, cut into pieces, with an equal quantity of kieselguhr, add 50 ml of methanol, ultrasonicate for 20 minutes and filter. Evaporate the filtrate to dryness, dissolve the residue in 30 ml of water, filter, extract the filtrate with two 15-ml quantities of chloroform, discard the chloroform extract, continue to extract with successive quantities of 15, 15, 10 and 10 ml of *n*-butanol saturated with water, combine the *n*-butanol extracts, evaporate to about 1 ml on a water bath, add a quantity of neutral aluminium oxide, stir well and dry on a water bath. Apply to a column (1.0 cm, in internal diameter) packed with neutral aluminium oxide (100 mesh, 4 g), pre-elute with 30 ml of a mixtare of ethanol and ethyl acetate (1:1) and continue to elute with 40 ml of methanol. Collect the methanol eluate, evaporate to dryness. Dissolve the residue in 0.5 ml of ethanol as the test solution. Dissolve paeoniflorin CRS in ethanol to prepare a solution containing 2 mg per ml as the reference solution. Carry out the method for thin layer chromatography (Appendix Ⅵ B), using silica gel G as the coating substance and a mixture of chloroform, ethyl acetate, methanol and formic acid (40:5:10:0.2) as the mobile phase. Apply separately 10 μl of the test solution and 5 μl of the reference solution to the plate. After developing and removal of the plate, dry in air. Spray with 5% vanillin in sulfuric acid and heat to the spot clear. The spot in the chromatogram obtained with the test solution corresponds in position and colour to the spot in the chromatogram obtained with the reference solution.

(3) Triturate 9 g of the water-honeyed pills to powder, or grind well 12 g of the big honeyed pills, cut into pieces, with 5 g of kieselguhr, add 40 ml of dehydrated ethanol, ultrasonicate for 20 minutes, filter, evaporate the filtrate to dryness and dissolve the residue in 0.5 ml of dehydrated ethanol as the test solution. Prepare a solution of 0.5 g of Fructus Citri Sarcodactylis reference drug and 10 ml of dehydrated ethanol as the reference drug solution in the same manner. Carry out the method for thin layer chromatography (Appendix Ⅵ B), using silica gel G as the coating substance and a mixture of cyclohexane and ethyl acetate (3:1) as the mobile phase. Apply separately 10 μl of the test solution and 2 μl of the reference drug solution to the plate. After developing and removal of the plate, dry in air, examine under ultraviolet light at 365 nm. The spots in the chromatogram obtained with the test solution correspond in position and colour to the spots in the chromatogram obtained with the reference drug solution.

Other requirements Comply with the general requirements for pills (Appendix Ⅰ A).

Assay Carry out the method for high performance liquid chromatography (Appendix Ⅵ D).

Chromatographic system and system suitability Use octadecylsilane bonded silica gel as the stationary phase and a mixture of acetonitrile and 0.05 mol/L solution of potassium dihydrogen phosphate (14:86) as the mobile phase. As detector a spectrophotometer set at 230 nm. The number of theoretical plates of the column is not less than 2000, calculated with the reference to the peak of paeoniflorin.

Reference solution Dissolve a quantity of paeoniflorin CRS in diluted ethanol to prepare a solution containing 16 μg per ml as the reference solution.

Test solution Triturate well the water-honeyed pills or cut the big honeyed pills, obtained under the test of weight variation, to powder or into pieces. Weigh accurately 0.55 g of the water-honeyed pills or 0.75 g of the big honeyed pills

in a conical flask with stopper, add accurately 25 ml of dilute ethanol, stopper well, weigh and ultrasonicate (power, 250 W; frequency, 33 kHz) for 30 minutes. Allow to cool, weigh again and replenish the lost weight with dilute ethanol, mix well, centrifuge and filter the supernatant, use the successive filtrate as the test solution.

Procedure Inject accurately 10 μl of each of the reference solution and the test solution into the column and calculate the content.

It contains not less than 0.32 mg per gram of water-honeyed pills, or not less than 1.44 mg per big honeyed pill of paeoniflorin ($C_{23}H_{28}O_{11}$), referred to Radix Paeoniae Alba.

Action To soothe the liver to alleviate stagnation of *liver-qi*, and harmonize the stomach to kill pain.

Indications Fullness in the hypochondriac, pain in the stomach, anorexia, hiccuping, vomiting, and irregular bowel movements due to disharmony between the liver and stomach.

Usage and dosage 9 g of water-honeyed pills, or 2 big honeyed pills, twice a day.

Strength 20 g per 100 water-honeyed pills, or 6 g per big honeyed pill

Storage Preserve in tightly closed containers.

Shugan Wan
(舒肝丸)

Shugan Pills

Ingredients Fructus Toosendan 150 g; Rhizoma Corydalis (processed with vinegar) 100 g; Radix Paeoniae Alba (stir-baked with wine) 120 g; Rhizoma Wenyujin Concisum 100 g; Radix Aucklandiae 80 g; Lignum Aquilariae Resinatum 100 g; Fructus Amomi Rotundus 60 g; Fructus Amomi 80 g; Cortex Magnoliae Officinalis (processed with ginger) 60 g; Pericarpium Citri Reticulatae 80 g; Fructus Aurantii (stir-baked) 100 g; Poria 100 g; Cinnabaris 27 g.

Procedure Levigate Cinnabaris to very fine powder, pulverize Fructus Toosendan and other eleven ingredients to fine powder. Triturate Cinnabaris with the above powders, sift and mix thoroughly. To each 100 g of the powder add 65-85 g of refined honey and a quantity of water to make water-honeyed pills and dry; or add 170-180 g of refined honey to make big honeyed pills, or add water (with 4% refined honey) to make watered pills and dry.

Description Brownish-red to brown water-honeyed pills, big honeyed pills and watered pills; odour, slight; taste, sweet and then slightly bitter.

Identification (1) Microscopical: Irregularly branched masses colourless, dissolved in chloral hydrate solution; hyphae colourless or pale brown, 4-6 μm in diameter. Fibre bundles in pericarp surrounded by cells containing prisms of calcium oxalate or a few clusters, forming crystal fibres, walls of crystal cells varying in thickness, lignified. Sclerenchymatous cells of endotesta yellowish-brown or brownish-red, subpolygonal in surface view, walls thickened, containing silica body. Stone cells branched, with thickened walls, striations distinct. Prisms of calcium oxalate abundant in parenchyma. Clusters of calcium oxalate occurring in parenchymatous cells, 18-32 μm in diameter, often arranged in rows or several in one cell. Irregular fine granules dark brownish-red, luster with dark edge.

(2) Wash 2.5 g of the watered pills, or 4 g of the water-honeyed pills, or 6 g of the big honeyed pills with water; a small quantity of vermilion precipitate is produced. Take out the precipitate, moisten with hydrochloric acid, rub gently on a bright and clean copper plate; the surface of the copper plate shows silvery-white lustre, which disappears on heating.

(3) Triturate 2.5 g of watered pills, or 4 g of water-honeyed pills or 6 g of big honeyed pills, in pieces, with 5 ml of the mixture ethanol and ammonia TS (1:1), heat under reflux with 30 ml of benzene on a water bath for 2 hours and filter. Extract the filtrate with successive quantities of 20, 15 and 15 ml of 20% solution of hydrochloric acid. Combine the acid extracts, adjust to alkaline with ammonia TS, extract with successive quantities of 25, 20 and 20 ml of chloroform. Combine the chloroform extracts, wash with water, dehydrate over anhydrous sodium sulphate, concentrate to about 1 ml as the test solution. Prepare a solution of 1 g of Rhizoma Corydalis reference drug as the reference drug solution in the same manner. Carry out the method for thin layer chromatography (Appendix Ⅵ B), using silica gel G as the coating substance and a mixture of benzene and ethanol (4:1) as the mobile phase. Apply separately to the plate 10 μl of each of the two solutions. After developing and removal of the plate, dry in air, spray with potassium iodobismuthate TS and ethanolic sodium nitrite TS successively. The brown spots in the chromatogram obtained with the test solution correspond in position and colour to the spots in the chromatogram obtained with the reference drug solution.

(4) Triturate 7 g of the watered pills or 12 g of the water-honeyed pills, or pulverize 18 g of the big honeyed pills with 10 g of kieselguhr, heat under an ultra-red lamp to dryness. Add 90 ml of methanol, ultrasonicate for 30 minutes, filter, use 30 ml of the filtrate as the test solution. Dissolve hesperidin CRS in methanol to prepare a saturated solution as the reference solution. Carry out the method for thin layer chromatography (Appendix Ⅵ B), using silica gel G mixed with 1% solution of sodium hydroxide as the coating substance and a mixture of ethyl acetate, methanol and water (100:17:13) as the mobile phase. Apply separately 2-4 μl of the test solution and 2 μl of the reference solution to the plate, develop to about 3 cm, remove the plate, dry in air. Then develop to 8 cm using the upper layer of the mixture of toluene, acetyl acetate, formic acid and water (20:10:1:1) as the mobile phase. After removal of the plate, dry in air, spray with 1% aluminium chloride in methanol, and examine under ultraviolet light at 365 nm. The fluorescent spot in the chromatogram obtained with the test solution corresponds in position and colour to the fluorescent spot in the chromatogram obtained with the reference solution.

(5) Evaporate the remainder of the methanol extract obtained under Identification (4) to dryness and dissolve the residue in 40-ml of dilute hydrochloric acid. Extract with three 20-ml quantities of chloroform, combine the chloroform extracts. Extract with three 20-ml quantities of 2% solution of sodium hydroxide, combine the alkaline extracts. Adjust to pH 1-2 with hydrochloric acid, extract with three 20-ml quantities of chloroform, combined chloroform extracts, wash with water. Dehydrate the chloroform extracts with anhydrous sodium sulphate, evaporate to dryness, dissolve the residue in 2 ml of methanol as the test solution. Dissolve magnolol CRS and honokiol CRS in methanol to prepare two solutions containing 2 mg and 1 mg per ml respectively as the reference solutions. Carry out the method for thin layer chromatography (Appendix Ⅵ B), using silica gel GF_{254} as the coating substance and a mixture of chloroform, benzene and ethyl

acetate (5:4:1) as the mobile phase. Apply separately 2 μl of each of the three solutions to the plate. After developing and removal of the plate, dry in air, and examine under ultraviolet light at 254 nm. The spots in the chromatogram obtained with the test solution correspond in position and colour to the spots in the chromatogram obtained with the reference solutions. Then spray with 5% vanillin in sulfuric acid and heat to the spots clear. The spots in the chromatogram obtained with the test solution correspond in position and colour to the spots in the chromatogram obtained with the reference solutions.

(6) Triturate 4 g of the watered pills or 6 g of the water-honeyed pills, or pulverize 6 g of the big honeyed pills with 10 g of kieselguhr. Add 30 ml of chloroform, ultrasonicate for 30 minutes, filter, and dissolve the residue in 2 ml of chloroform as the test solution. Prepare a solution of 1 g of Radix Aucklandiae reference drug and 10 ml of chloroform in the same manner as the reference solution. Carry out the method for thin layer chromatography (Appendix Ⅵ B), using silica gel G as the coating substance and a mixture of cyclohexane and chloroform (1 : 5) as the mobile phase. Apply separately 6 μl of the test solution and the reference solution to the plate. After removal of the plate, dry in air, spray with 1% vanillin in sulfuric acid and heat to the spots clear. The spots in the chromatogram obtained with the test solution correspond in position and colour to the spots in the chromatogram obtained with the reference solution.

Other requirements Comply with the general requirements for pills (Appendix Ⅰ A).

Assay Carry out the method for high performance liquid chromatography (Appendix Ⅵ D).

Chromatographic system and system suitability Use octadecylsilane bonded silica gel as the stationary phase and a mixture of methanol and phosphate BS [a mixture of 0.067 mol/L disodium hydrogen phosphate and 0.067 mol/L potassium dihydrogen phosphate (5:1), pH 7.4] (23:77) as the mobile phase. As detector a spectrophotometer set at 230 nm. The number of theoretical plates of the column is not less than 3000, calculated with reference to the peak of paeoniflorin.

Reference solution Dissolve a quantity of paeoniflorin CRS, accurately weighted, in methanol to prepare a solution containing 20 μg per ml as the reference solution.

Test solution Triturate well the watered pills or the water-honeyed pills, or pulverize the big honeyed pills obtained under the test of weigh variation, weigh accurately 1 g each of the three pills separately in a stopper conical flask, add accurately 50 ml of dilute ethanol, stopper well, weigh and ultrasonicate (power, 260 W; frequency, 40 kHz) for 45 minutes. Allow to cool, weigh again and replenish the lost weight with dilute ethanol, mix well and filter. Measure accurately 5 ml of the filtrate and evaporate to the dryness, dissolve the residue in 5 ml of water and apply to a GDX-201 macroreticular resin column (0.9 cm in inner diameter and 12 cm in length). Elute with 100 ml of 30% methanol, and collect the eluates. Evaporate to dryness, dissolve the residue in methanol in a 5 ml volumetric flask, dilute with methanol to the volume, mix well and filter, use the filtrate as the test solution.

Procedure Inject accurately 10 μl of the reference solution and 5-15 μl of the test solution into the column, and calculate the content.

It contains not less than 0.72 mg of paeoniflorin ($C_{23}H_{28}O_{11}$) per gram of watered pills, not less than 0.42 mg per gram of water-honeyed pills, not less than 1.6 mg per gram of big honeyed pills, referred to Radix Paeoniae Alba.

Action To soothe the liver and harmonize the stomach, and regulate *qi* flow to kill pain.

Indications Distending pain in the chest and hypochondria, stomachache, gastric discomfort with vomiting, belching, and casting up of gastric acid due to stagnation of *liver-qi*.

Usage and dosage 4 g water-honeyed pills, or 1 big honeyed pill, 2.3 g of watered pills, 2-3 times a day.

Precaution Be cautious about pregnant women.

Strength 20 g per 100 water-honeyed pills; 6 g per big honeyed pill; 2.3 g per 20 watered pills

Storage Preserve in tightly closed containers.

Shujin Huoluo Jiu
(舒筋活络酒)

Shujin Huoluo Wine

Ingredients Fructus Chaenomelis 45 g; Herba Taxilli 75 g; Rhizoma Polygonati Odorati 240 g; Radix Dipsaci 30 g; Radix Cyathulae 90 g; Radix Angelicae Sinensis 45 g; Rhizoma Chuanxiong 60 g; Flos Carthami 45 g; Radix Angelicae Pubescentis 30 g; Rhizoma et Radix Notopterygii 30 g; Radix Saposhnikoviae 60 g; Rhizoma Atractylodis Macrocephalae 90 g; Faeces Bombycis 60 g; Semen Oryzae cum Monasco Fermentatum 180 g; Radix et Rhizoma Glycyrrhizae 30 g.

Procedure Pulverize the above ingredients, except Semen Oryzae cum Monasco Fermentatum, to coarse powder, and mix thoroughly with Semen Oryzae cum Monasco Fermentatum. Dissolve 555 g of brown sugar in 11100 g of white wine. Carry out the method for percolation as described under liquid extracts and extracts (Appendix Ⅰ O), using the sugar wine as the solvent, macerate for 48 hours, percolate slowly at a speed of 1-3 ml per minute, collect the percolate, allow to stand, and filter.

Description A brownish-red clear liquid; odour, aromatic; taste, slightly sweet and bitter.

Ethanol content 50-57 per cent (Appendix Ⅸ M).

Other requirements Comply with the general requirements for medicinal wines (Appendix Ⅰ M).

Action To expel *wind* and eliminate *dampness*, promote blood circulation to dredge meridians, and nourish *yin* to generate fluid.

Indications Obstruction of *qi* and blood with pain due to *wind-dampness* blocking meridians and blood stasis in vessels accompanied with *yin* deficiency with manifestations of painful and immobilized joints and numbness of limbs.

Usage and dosage 20-30 ml, twice a day.

Precaution Be cautious about pregnant women.

Storage Preserve in tightly closed containers, stored in a cool place.

Shujin Wan
(舒筋丸)

Shujin Pills

Ingredients Semen Strychni Pulveratum 115 g; Herba Ephedrae 80 g; Radix Angelicae Pubescentis 6 g; Rhizoma et Radix Notopterygii 6 g; Ramulus Cinnamomi 6 g; Radix

et Rhizoma Glycyrrhizae 6 g; Rhizoma Homalomenae 6 g; Radix Achyranthis Bidentatae 6 g; Olibanum (processed with vinegar) 6 g; Fructus Chaenomelis 6 g; Myrrha (processed with vinegar) 6 g; Radix Saposhnikoviae 6 g; Cortex Eucommiae (processed with salt) 3 g; Cortex Illicii 6 g; Radix Dipsaci 3 g.

Procedure Pulverize the above ingredients, except semen strychni pulveratum, to fine powder, and mix throughly with semen strychni pulveratum, and sift. To each 100 g of the powder add 150-170 g of refined honey to make big honeyed pills.

Description Brown big honeyed pills; taste, bitter.

Identification (1) Moisten 3 g of the pills, in pieces, in 2 ml of concentrated ammonia TS, add 20 ml of chloroform, ultrasonicate for 30 minutes, filter, evaporate the filtrate to dryness, dissolve the residue in 2 ml of chloroform as the test solution. Dissolve strychnine CRS and brucine CRS in chloroform to prepare a mixture containing 1 mg of each per ml as the reference solution. Carry out the method for thin layer chromatography (Appendix Ⅳ B), using silica gel G mixed with sodium carboxymethyl cellulose as the coating substance and a mixture of toluene, acetone, ethanol and concentrated ammonia TS (20 : 25 : 3 : 2) as the mobile phase. Apply separately 10 μl of each of the two solutions to the plate. After developing and removal of the plate, dry in air, and spray with dilute potassium iodobismuthate TS. The spots in the chromatogram obtained with the test solution correspond in position and colour to the spots in the chromatogram obtained with the reference solution.
(2) Dissolve ephedrine hydrochloride CRS in methanol to prepare a solution containing 0.5 mg per ml as the reference solution. Carry out the method for thin layer chromatography (Appendix Ⅳ B), using silica gel G mixed with sodium carboxymethyl cellulose as the coating substance and a mixture of chloroform, ethanol, cyclohexane and concentrated ammonia TS (45 : 15 : 15 : 2) as the mobile phase. Apply separately 10 μl of each of the reference solution and the test solution obtained under the test of Identification (1) to the plate. After developing and removal of the plate, dry in air, spray with ninhydrin TS, and heat at 105℃ to the spots clear. The spot in the chromatogram obtained with the test solution corresponds in position and colour to the spot in the chromatogram obtained with the reference solution.

Other requirements Comply with the general requirements for pills (Appendix Ⅰ A).

Assay Carry out the method for high performance liquid chromatography (Appendix Ⅵ D).

Chromatographic system and system suitability Use silica gel as the stationary phase and a mixture of acetonitrile and fifty-fifty mixture of 0.01 mol/L sodium heptanesulfonate solution and 0.02 mol/L potassium dihydrogen phosphate solution (adjust to pH 2.8 with 10% solution of phosphoric acid) (21 : 79) as the mobile phase. As detector a spectrophotometer set at 260 nm. The number of theoretical plates of the column is not less than 5000, calculated with the reference to the peak of strychnine.

Reference solution Dissolve 6 mg of strychnine CRS, accurately weighted, in a 10 ml volumetric flask and dilute with chloroform to volume, and mix well. Accurately measure 2 ml in a 10 ml volumetric flask, dilute with methanol to volume and mix well (containing 0.12 mg of strychnine per ml).

Test solution Pulverize the pills obtained under the test of weight variation, weigh accurately 3 g in a stopper conical flask, add 3 ml of sodium hydroxide TS, mix thoroughly, allow to stand for 30 minutes, add accurately 20 ml of chloroform, weigh, heat under reflux for 2 hours, allow to cool and weigh again. Replenish the lost weight with chloroform. Filter with filter paper spread with small quantity of anhydrous sodium sulfate, measure accurately 10 ml of the successive filtrate in a separator, extract with successive quantities of 15, 15, 10, 10 and 10 ml of 1% solution of sulphuric acid. Combine the acid solutions, adjust to pH 10-11 with 30% solution of sodium hydroxide, extract with successive quantities of 20, 20, 15, 15 and 15 ml of chloroform, combine the chloroform extracts, evaporate to dryness, dissolve the residue with methanol, transfer to a 10 ml volumetric flask, dilute to the volume and mix well, filter and take the successive filtrate as the test solution.

Procedure Inject accurately 10 μl of each of the reference solution and the test solution into the column and calculate the content.
It contains not less than 3.5 mg and not more than 4.3 mg of strychnine ($C_{21}H_{22}N_2O_2$) per pill, referred to Semen Strychni.

Action To expel *wind* and eliminate *dampness*, and relax muscles and tendons and promote blood circulation.

Indications Obstruction of *qi* and blood with pain due to *wind*, *cold* and *dampness* with manifestations of numbness of limbs, painful tendons and bones and walking with difficulty.

Usage and dosage 1 pill, once a day.

Precaution Contraindicated for pregnant women.

Strength 3 g per pill

Storage Preserve in tightly closed containers.

Shuxin Koufuye (舒心口服液)

Shuxin Mixture

Ingredients Radix Codonopsis; Radix Astragali; Flos Carthami; Radix Angelicae Sinensis; Rhizoma Chuanxiong; Rhizoma Sparganii; Pollen Typhae.

Procedure Sack Pollen Typhae in calico bag, decoct with the other ingredients, except Flos Carthami, with water for 2 times, 2 hours for the first time and 1.5 hours for the second time, then add Flos Carthami, decoct for 20 minutes. Combine the decoctions, filter, concentrate the filtrate to about 500 ml, add 1250 ml of ethanol, stir thoroughly, stand for 24 hours, filter and concentrate in vacuum to a thick extract. Dilute with a quantity of water, filter, add 100 g sucrose or 0.3 g stevioside (without sucrose) and 3 g sodium benzoate, and preservatives, adjust pH to regulating range, add water to 1000 ml. Stir well, stand, filter, pack and sterilize.

Description A brownish-red and clear liquid; odour, slightly aromatic; taste, sweet, slightly bitter and astringent.

Identification Evaporate 20 ml of mixture to dryness, dissolve the residue in 20 ml of chloroform, heat under reflux for 30 minutes, allow to cool, filter, evaporate the filtrate to 1 ml as the test solution. Prepare a solution of 1.5 g of Radix Codonopsis reference drug, add a quantity of water, decoct for 2 times, 1 hour for each time, combine the decoction, filter, the filtrate in the same manner as the reference drug solution. Carry out the method for thin layer chromatography (Appendix Ⅵ B), using silica gel G mixed

with sodium carboxymethyl cellulose as the coating substances and the mixture of toluene, ethyl acetate and glacial acetic acid (1∶1∶0.1) as the mobile phase. Apply separately 10 μl of the test solution and 5 μl of the reference solution to the plate. After developing and removal of the plate, dry in air, examine under ultraviolet at 365 nm. The fluorescent spot in the chromatogram obtained with the test solution corresponds in position and colour to the spot in the chromatogram obtained with the reference solution.

Relative density Not less than 1.05 or 1.03 (with sucrose) (Appendix Ⅶ A).

pH value 4.5-6.5 (Appendix Ⅶ G).

Other requirements Comply with the general requirements for mixture (Appendix Ⅰ J).

Assay Measure accurately 20 ml of the mixture, extract with chloroform by shaking for 2 times, 10 ml for each time, discard the chloroform extract. Extract with four 20-ml quantities of *n*-butanol saturated with water, combine the *n*-butanol extract, wash with successive quantities 50, 50 and 30 ml of ammonia TS, take the *n*-butanol solution, then wash with two 50-ml quantities of water saturated *n*-butanol. Evaporate the *n*-butanol solution to dryness, dissolve the residue in a quantity of methanol, transfer to a 2 ml volumetric flak, dilute to the volume and mix well, used as the test solution. Dissolve astragaloside Ⅳ CRS in methanol to prepare a reference solution containing 1 mg per ml as the reference solution. Carry out the method for thin layer chromatography (Appendix Ⅵ B), using silica gel G as the coating substance and a mixture of the upper layer of *n*-butanol, ethyl acetate and water (4∶1∶5) and methanol (10∶1) as the mobile phase. Apply accurately 5 μl of the test solution, 2 μl and 6 μl of the reference solution alternatively to the plate. After developing and removal of the plate, dry in air, spray with 10% sulfuric acid in ethanol, heat to the spot clear at 100℃, remove, allow to cool, cover the plate with a glasses plate of the same size and fix up with adhesive plaster. Carry out the method for thin layer chromatography (Appendix Ⅵ A thin layer chromatographic scanning method), scan at the wavelength of $\lambda_S = 530$ nm, $\lambda_R = 700$ nm. Measure the integration values of the absorbance from the test solution and the reference solution respectively, and calculate the content.
It contains not less than 30 μg of astragaloside Ⅳ ($C_{41}H_{68}O_{14}$) per ml, referred to Radix Scutellariae.

Action To replenish *heart-qi* and promote blood circulation to resolve stagnated blood.

Indications Impeded flow of *yang-qi* in the chest due to a deficiency of *heart-qi* and accumulation of stagnated blood with manifestations of constriction in the chest and stabbing pain in the precardium, shortness of breath and lassitude; angina pectoris in coronary heart disease with above symptoms.

Usage and dosage 20 ml, twice a day.

Precaution Be cautious about pregnant women.

Strength 20 ml per phial

Storage Preserve in tightly closed.

Shuxiong Pian
(舒胸片)

Shuxiong Tablets

Ingredients Radix et Rhizoma Notoginseng 100 g; Flos Carthami 100 g; Rhizoma Chuanxiong 200 g.

Procedure Pulverize Radix et Rhizoma Notoginseng to fine powder, sift. Decoct Rhizoma Chuanxiong with water for 2 hours, filter, collect the filtrate in another container. Decoct the residue and Flos Carthami with water twice, each for 1 hour. Combine all decoctions, filter, allow the filtrate to stand for 24 hours. Separate the supernatant, filter, concentrate the filtrate, dry to a dry extract, then pulverize to fine powder, mix with the powder of Radix Notoginseng thoroughly, make granules and compress into 1000 tablets, coat with sugar.

Description Sugar coated tablets with brown core; odour, slight; taste, bitter.

Identification (1) Pulverize 20 tablets, removed the sugar coats, to fine powder, heat under reflux with 20 ml of ether for 1 hour, and filter. Evaporate the filtrate to dryness. Dissolve the residue in 2 ml of ether as the test solution. To 2 g of Rhizoma Chuanxiong reference drug, macerate in 10 ml of ether for 1 hour and filter. Evaporate the filtrate to dryness, dissolve the residue in 2 ml of ether as the reference drug solution. Carry out the method for thin layer chromatography (Appendix Ⅵ B), using silica gel G as the coating substance and a mixture of petroleum ether (30-60℃) and chloroform (1∶9) as the mobile phase. Apply separately 10 μl of each of the two solutions to the plate. After developing and removal of the plate, dry in air, and examine under ultraviolet light at 365 nm. The fluorescent spots in the chromatogram obtained with the test solution correspond in position and colour to the spots in the chromatogram obtained with the reference drug, solution.
(2) To 0.5 g of Radix et Rhizoma Notoginseng reference drug, add 20 ml of *n*-butanol saturated with water, ultrasonicate for 20 minutes, filter, wash with two 10-ml quantities of water and discard the washings. Evaporate the *n*-butanol solution to dryness, dissolve the residue in 1 ml of methanol as the reference drug solution. Carry out the method for thin layer chromatography (Appendix Ⅵ B), using silica gel G as the coating substance and the lower layer of chloroform, ethyl acetate, methanol and water (15∶40∶22∶10), stood at 5-10℃ for 12 hours, as the mobile phase. Apply separately 10 μl of the test solution obtained under Assay and 2 μl of the above reference drug solution to the plate. After developing and removal of the plate, dry in air. Spray with 10% sulfuric acid in ethanol, heat to the spots clear at 110℃. The spots in the chromatogram obtained with the test solution correspond in position and colour to the spots in the chromatogram obtained with the reference solution.

Other requirements Comply with the general requirements for tablets (Appendix Ⅰ D).

Assay Triturate 10 tablets, removed sugar coat and weighed accurately, to fine powder, weigh accurately 1 g of the powder, place in a Soxlhet's extractor, heat under reflux in 60 ml of ether for 2 hours, discard the ether extract, expel solvent from the drug residue. Heat the drug residue under reflux in 60 ml of methanol until the extract colourless, recover methanol to dryness. Dissolve the residue in 30 ml of water, extract with successive quantities of 20, 20, 10, 10, and 10 ml, of *n*-butanol saturated with water. Combine the extracts, wash with two 20-ml quantities of water, discard the washings. Recover *n*-butanol extract to dryness, dissolve the residue in a quantity of methanol, transfer to a 10 ml volumetric flask, dilute with methanol to the volume and mix well as the test solution. Dissolve ginsenoside Rg_1 CRS, accurately weighed, in methanol to prepare a solution containing 1.4 mg per ml as the reference solution. Carry out the method for thin layer chromatography (Appendix Ⅵ B), using silica

gel G as the coating substance and the lower layer of chloroform, ethyl acetate, methanol and water (15∶40∶22∶10), stood at 5-10℃ for 12 hours, as the mobile phase. Apply accurately to the plate 6 μl of the test solution, 1 μl and 4 μl of the reference solution alternatively. After developing and removal of the plate, dry in air. Spray with 10% sulfuric acid in ethanol, heat at 105℃ to the spots clear. Cover with a same size glass on the plate, fix with an adhesive plaster. Carry out the method for thin layer chromatography (Appendix Ⅵ B, thin layer chromatographic scanning method), scan at the wavelength: λ_S = 540 nm, λ_R = 700 nm. Measure the integration values of absorbance of the test solution and the reference solution and calculate the content.

It contains not less than 1.0 mg of ginsenoside Rg_1 ($C_{42}H_{72}O_{14}$) per tablet, referred to Radix et Rhizoma Notoginseng.

Action To promote blood circulation to resolve stagnated blood and dredge meridians to kill pain.

Indications Chest impediment due to stagnated blood with manifestations of constriction in the chest and stabbing pain in the precardium; angina pectoris in coronary heart disease with above symptoms.

Usage and dosage 5 tablets, 3 times a day.

Precaution Be cautious about pregnant women; it is forbidden to prescribe to patients with *blood stagnation* in a *heat* syndrome.

Storage Preserve in tightly closed containers.

Shuzheng Pian
(暑症片)

Shuzheng Tablets

Ingredients Fructus Gleditsiae Abnormalis 80 g; Radix et Rhizoma Asari 80 g; Herba Menthae 69 g; Herba Pogostemonis 69 g; Radix Aucklandiae 46 g; Radix Angelicae Dahuricae 23 g; Radix Saposhnikoviae 46 g; Pericarpium Citri Reticulatae 46 g; Rhizoma Pinelliae (processed) 46 g; Radix Platycodonis 46 g; Radix et Rhizoma Glycyrrhizae 46 g; Rhizoma Dryopteris 46 g; Alumen (calcined) 23 g; Realgar 57 g; Cinnabaris 57 g.

Procedure Levigate Cinnabaris and Realgar to very fine powders, respectively. Pulverize Fructus Gleditsiae Abnormalis, Radix et Rhizoma Asari, Radix Angelicae Dahuricae, Alumen, and Radix Aucklandiae to fine powders, sift. Extract the volatile oil from Herba Pogostemonis, Herba Menthae and Pericarpium Citri Reticulatae, and filter the aqueous solution. Decoct Radix Platycodonis, Radix Saposhnikoviae, Rhizoma Dryopteris, Rhizoma Pinelliae, and Radix et Rhizoma Glycyrrhizae with water. Combine the decoctions and the above aqueous solution, concentrate to a quantity. Add starch to prepare a paste, then add the above powders, make granules and dry at a lower temperature. Add the volatile oil, mix thoroughly, compress into 1000 tablets.

Description Pale brownish-yellow tablets; odour, aromatic; taste, pungent.

Identification (1) Place 1 tablet, finely powdered, in a test tube, add 5 ml of water, shake, allow to stand, the vermilion precipitate and the orange precipitate are produced at the bottom of the test tube.

(2) Grind well 10 tablets to fine powder, add 40 ml of ether, ultrasonicate for 15 minutes, filter, evaporate the filtrate to dryness, dissolve the residue in 1 ml of ethyl acetate as the test solution. Prepare a solution of 0.5 g of Radix Aucklandiae reference drug and 15 ml of ether as the reference drug solution in the same manner. Carry out the method for thin layer chromatography (Appendix Ⅵ B), using silica gel G as the coating substance and a mixture of cyclohexane and acetone (10∶3) as the mobile phase. Apply separately 4 μl of each of the two solutions to the plate. After developing and removal of the plate, dry in air. Spray with 5% vanillin in sulfuric acid, heat to the spots clear. The purplish-red to purplish-blue spots in the chromatogram obtained with the test solution correspond in position and colour to the spots in the chromatogram obtained with the reference solution.

Other requirements Comply with the general requirements for tablets (Appendix Ⅰ D).

Extractives Carry out the method for determination of water-soluble extractives (Appendix Ⅹ A, the cold extraction method); not less than 25.0 per cent.

Assay Weigh accurately and pulverize 20 tablets, weigh accurately a quantity of the fine powder (equivalent to about 2 tablets), place in a 250 ml conical flask, add 25 ml of sulfuric acid and 2 g of potassium nitrate, heat until the extract becomes milky-white. Allow to cool, add 50 ml of water, mix well. Add dropwise 1% solution of potassium permanganate to the solution until the pink colour is produced, and add dropwise 2% solution of ferrous sulfate until the pink colour just disappears. Add 2 ml of the ferric ammonium sulfate IS, titrate with ammonium thiocyanate (0.1 mol/L) VS. 1 ml of ammonium thiocyanate (0.1 mol/L) VS corresponds to 11.63 mg of HgS.

It contains not less than 48 mg and not more than 60 mg of HgS per tablet, referred to Cinnabaris.

Action To expel *cold* and treat epidemic diseases, and resolve turbidity and resuscitate.

Indications Syncope, lockjaw, abdominal pain, vomiting, diarrhea and numbness of limbs due to affliction from pathogenic factors in summer.

Usage and dosage 2 tablets, 2-3 times a day, if necessary, a small quantity is insufflated into the nostrils for sneezing after ground into fine powder.

Precaution Contraindicated for pregnant women.

Storage Preserve in tightly closed containers.

Sijunzi Wan
(四君子丸)

Sijunzi Pills

Ingredients Radix Codonopsis 200 g; Rhizoma Atractylodis Macrocephalae (stir-baked) 200 g; Poria 200 g; Radix et Rhizoma Glycyrrhizae Praeparata Cum Melle 100 g.

Procedure Pulverize the four ingredients to fine powder, sift and mix thoroughly. Decoct 50 g of Rhizoma Zingiberis Recens and 100 g of Fructus Jujubae with water in portions and filter. Make pills with the decoctions and dry.

Description Brown watered pills; taste, slightly sweet.

Identification (1) Microscopical: Irregular branched masses colourless, dissolved in chloral hydrate solution; hyphae colourless or pale brown, 4-6 μm in diameter. Anastomosing laticiferous tube 12-15 μm in diameter, containing fine granule-like contents. Needle crystals of

calcium oxalate fine, 10-32 μm long, irregularly filling in parenchymatous cells. Fibre bundles surrounded by parenchymatous cells containing prisms of calcium oxalate, forming crystal fibres.

(2) Pulverize 2 g of the pills, add 10 ml of *n*-hexane, ultrasonicate for 15 minutes, and filter. Evaporate the filtrate to dryness, dissolve the residue in 1 ml of *n*-hexane as the test solution. Prepare a solution of 0.2 g of Rhizoma Atractylodis Macrocephalae reference drug and 2 ml of *n*-hexane in the same manner as the reference drug solution. Carry out the method for thin layer chromatography (Appendix Ⅵ B), using silica gel G as the coating substance and a mixture of petroleum ether (60-90℃) and ethyl acetate (20∶0.1) as the mobile phase. Apply separately 10 μl of each of the two freshly prepared solutions to the plate. After developing and removal of the plate, dry in air. Spraying with 5% vanillin in sulfuric acid and heat to the spots clear. The spots in the chromatogram obtained with the test solution correspond in position and colour to the spots in the chromatogram obtained with the reference drug solution.

(3) Grind well 5 g, add 40 ml of water, decoct for 30 minutes, and filter. Extract the filtrate with three 15-ml quantities of *n*-butanol. Combine the *n*-butanol extracts, wash with three 10-ml quantities of water. Evaporate the *n*-butanol liquid to dryness, and dissolve the residue in 0.5 ml of methanol as the test solution. Prepare a solution of 0.5 g of Radix et Rhizoma Glycyrrhizae reference drug in the same manner as the reference drug solution. Carry out the method for thin layer chromatography (Appendix Ⅵ B), using silica gel G as the coating substance mixed with 1% solution of sodium hydroxide and a mixture of ethyl acetate, formic acid, glacial acetic acid and water (15∶1∶1∶2) as the mobile phase. Apply separately 4 μl of the test solution and 1 μl of the reference drug solution to the plate. After developing and removal of the plate, dry in air. Spray with 10% sulphuric acid in ethanol and heat at 105℃ to the spots clear. Examine under ultraviolet light at 365 nm, the fluorescent spots in the chromatogram obtained with the test solution correspond in position and colour to the spots in the chromatogram obtained with the reference drug solution.

Other requirements Comply with the general requirements for pills (Appendix Ⅰ A).

Action To invigorate the spleen and replenish *qi*.

Indications Anorexia and loose stools due to *qi* deficiency in the spleen and stomach.

Usage and dosage 3-6 g, 3 times a day.

Storage Preserve in tightly closed containers, protected from moisture.

Sini Tang (四逆汤)

Sini Mixture

Ingredients Radix Aconiti Lateralis Praeparata 300 g; Rhizoma Zingiberis 200 g; Radix et Rhizoma Glycyrrhizae Praeparata Cum Melle 300 g.

Procedure Decoct Radix Aconiti Lateralis Praeparata and Radix et Rhizoma Glycyrrhizae Praeparata Cum Melle twice for 2 and 1.5 hours respectively. Combine the decoctions and filter. Extract the volatile oil from Rhizoma Zingiberis by steam distillation and collect in a separate container. Decoct the residue of Rhizoma Zingiberis with water for 1 hour. Combine the decoction with the solution remained after distillation and filter. Combine the filtrate with the decoction of Radix Aconiti and Radix et Rhizoma Glycyrrhizae Praeparata Cum Melle and concentrate to about 400 ml. Allow to cool, add 1200 ml of ethanol, stir thoroughly. Allow to stand for 24 hours, filter and concentrate in vacuum to a thick extract. Dilute the extract with a quantity of water, preserve in cool place for 24 hours and filter. Add 300 ml of simple syrup, a quantity of preservatives and the above volatile oil. Add water to make to 1000 ml, stir thoroughly, pack and sterilize.

Description A brownish-yellow liquid; odour, aromatic; taste, sweet and pungent.

Identification (1) Extract 20 ml of the mixture with 20 ml of *n*-butanol by shaking, evaporate the *n*-butanol extract to dryness and dissolve the residue in 2 ml of methanol as the test solution. To 1 g of Radix et Rhizoma Glycyrrhizae reference drug, add 40 ml of ether, heat under reflux for 1 hour, filter, discard the ether extract. Add 30 ml of methanol to the drug residue, heat under reflux for 1 hour, filter, evaporate the filtrate to dryness, dissolve the residue in 20 ml of water as the reference drug solution. Carry out the method for thin layer chromatography (Appendix Ⅵ B), using silica gel G mixed with 1% solution of sodium hydroxide as the coating substance and a mixture of ethyl acetate, glacial acetic acid, formic acid and water (15∶1∶1∶2) as the mobile phase. Apply separately 2 μl of the test solution and the reference drug solution to the plate. After developing and removal of the plate, dry in air, spray with 10% solution of sulfuric acid in ethanol, heat to the spots clear at 105℃, examine under ultraviolet at 365 nm. The fluorescent spot in the chromatogram obtained with the test solution corresponds in position and colour to the spot in chromatogram obtained with the reference drug solution.

(2) To 5 g of Rhizoma Zingiberis reference drug, add 30 ml of water, heat under reflux for 1 hour, allow to cool, filter, extract the filtrate with 40 ml of *n*-butanol by shaking, evaporate the *n*-butanol to dryness and dissolve the residue in 2 ml of methanol as the reference drug solution. Carry out the method for thin layer chromatography (Appendix Ⅵ B), using silica gel G mixed with sodium carboxymethyl cellulose as the coating substance and a mixture of cyclohexane and ether (1∶1) as the mobile phase. Apply separately 5 μl of the test solution obtained under the test of Identification (1) and the reference drug solution to the plate. After developing and removal of the plate, dry in air, spray with solution of vanillin in sulfuric acid TS, heat to the spots clear at 105℃, examine under ultraviolet at 365 nm. The spots in the chromatogram obtained with the test solution correspond in position and colour to the spots in chromatogram obtained with the reference drug solution.

Limit test for aconitine Measure 70 ml of the mixture, adjust to pH 10 with concentrated ammonia TS, extract with three 100-ml quantities of ether, recover the ether to dryness, and dissolve the residue in 2 ml of dehydrated ethanol as the test solution. Dissolve aconitine CRS and hypaconitine CRS in dehydrated ethanol to prepare a mixture containing 2 mg of each per ml as the reference solution. Carry out the method for thin layer chromatography (Appendix Ⅵ B), using silica gel G mixed with sodium carboxymethyl cellulose as the coating substance and the lower layer of a mixture of chloroform, ethyl acetate and concentrated ammonia TS (5∶5∶1) as the mobile phase. Apply separately 6 μl of the test solution and 5 μl of the reference drug solution to the plate. After developing and removal of the plate, dry in air, spray with dilute solution of potassium heptaiodobismuthate. The spots in the chromatogram obtained with the test solution are smaller or no in position and colour than the spots in chromatogram

obtained with the reference solution.

Other requirements Comply with the general requirements for mixtures (Appendix Ⅰ J).

Assay Carry out the method for high performance liquid chromatography (Appendix Ⅵ D).

Chromatographic system and system suitability Use octadecylsilane bonded silica gel as the stationary phase and a mixture of methanol, 0.2 mol/L solution of ammonium acetate and glacial acetic acid (67∶33∶1) as the mobile phase. As detector a spectrophotometer set at 250 nm. The number of theoretical plates of the column is not less than 2000, calculated with the reference to the peak of glycyrrhizinate.

Reference solution Dissolve 10 mg of ammonium glycyrrhizinate CRS, weigh accurately in a 25 ml volumetric flask, dilute with mobile phase to volume, and mix well. (containing 0.40 mg of ammonium glycyrrhizinate per ml, equivalent to 0.3918 mg of glycyrrhizinate).

Test solution Measure accurately 10 ml of the mixture to a 50 ml volumetric flask, dilute with mobile phase to the volume, mix well, and filter.

Procedure Inject accurately 10 μl of each of the reference solution and the test solution into the column, and calculate the content.

It contains not less than 0.50 mg of glycyrrhizinate ($C_{42}H_{62}O_{16}$) per ml, referred to Radix et Rhizoma Glycyrrhizae.

Action To warm the *middle-energizer* and expel *cold*, and restore *yang* from collapse.

Indications Collapse due to severe *yang* deficiency with manifestations of cold sweating, cold limbs, diarrhea with undigested food, and faint pulse.

Usage and dosage 10-20 ml, 3 times a day or follow doctor's advice.

Strength 10 ml per phial

Storage Preserve in tightly closed containers, stored in a cool place.

Sishen Wan
(四神丸)

Sishen Pills

Ingredients Semen Myristicae (simmered) 200 g; Fructus Psoraleae (stir-baked with salt) 400 g; Fructus Schisandrae Chinensis (processed with vinegar) 200 g; Fructus Evodiae (processed) 100 g; Fructus Jujubae (removed from kernel) 200 g.

Procedure Pulverize the above five ingredients to fine powder, sift and mix thoroughly. Crush 200 g of Rhizoma Zingiberis Recens into pieces, add a quantity of water and press for juice. Make pills with the fine powder and the juice, and dry.

Description Pale brown to brown watered pills; odour, slightly aromatic; taste, bitter and salty, slightly sour and pungent.

Identification (1) Microscopical: Stone cell of epidermis of testa pale yellowish-brown, subpolygonal in surface view, with relatively thickened walls and fine pit-canals, lumina containing dark brown contents. Nonglandular-hair 2-6-celled sometimes lumina containing reddish-brown contents. Glandular hairs with a multicellular elliptical head, containing brownish-yellow to brownish-red contents, and a 2-5-celled stalk. Epidermis cells of pericarp yellowish-brown to reddish-brown, subpolygonal in surface view, the thickness of cuticle about 10 μm in sectional view.

(2) To 10 g, finely powdered, carry out the method for the determination of volatile oil (Appendix Ⅹ D), add 2 ml of benzene and a quantity of water, heat under reflux for 1 hour, and use the benzene liquid as the test solution. Prepare a solution of 1 g of Semen Myristicae reference drug in the same manner as the reference drug solution. Carry out the method for thin layer chromatography (Appendix Ⅵ B), using silica gel G as the coating substance and a mixture of petroleum ether (60-90℃) and benzene (1∶1) as the mobile phase. Apply separately 10 μl of the test solution and 2 μl of the reference drug solution to the plate. After developing and removal of the plate, dry in air. Spray with a 10% sulphuric acid in ethanol and heat to the spots clear. The major spots in the chromatogram obtained with the test solution correspond in position and colour to the spots in the chromatogram obtained with the reference drug solution.

(3) To 2 g, finely powdered, add 20 ml of ethyl acetate, heat under reflux for 10 minutes, and filter. Evaporate the filtrate to dryness, and dissolve the residue in 2 ml of ethyl acetate as the test solution. Dissolve psoralen CRS and isopsoralen CRS in ethyl acetate to prepare a mixture containing 2 mg of each per ml as the reference solution. Carry out the method for thin layer chromatography (Appendix Ⅵ B), using silica gel G as the coating substance and a mixture of *n*-hexane and ethyl acetate (4∶1) as the mobile phase. Apply separately 2 μl of each of the two solutions to the plate. After developing and removal of the plate, dry in air. Spray with a 10% potassium hydroxide in methanol. Examine under ultraviolet light at 365 nm. The fluorescent spots in the chromatogram obtained with the test solution correspond in position and colour to the spots in the chromatogram obtained with the reference solution.

(4) To 1 g, finely powdered, add 10 ml of ethanol, heat under reflux on a water bath for 1 hour, filter, and use the filtrate as the test solution. Prepare a solution of 0.1 g of Fructus Evodiae reference drug in the same manner as the reference drug solution. Carry out the method for thin layer chromatography (Appendix Ⅵ B), using silica gel G as the coating substance and the upper layer of a mixture of *n*-butanol, acetic acid and water (2∶1∶1) as the mobile phase. Apply separately to the plate 2 μl of each of the two solutions. After developing and removal of the plate, dry in air. Examine under ultraviolet light at 365 nm, the fluorescent spots in the chromatogram obtained with the test solution correspond in position and colour to the spots in the chromatogram obtained with the reference drug solution.

Other requirements Comply with the general requirements for pills (Appendix Ⅰ A), except that the times limitation for disintegration time is within 2 hours.

Assay Carry out the method for high performance liquid chromatography (Appendix Ⅵ D).

Chromatographic system and system suitability Use octadecylsilane bonded silica gel as the stationary phase and a mixture of acetonitrile and water (30∶70) as the mobile phase. As detector a spectrophotometer set at 245 nm. The number of theoretical plates of the column is not less than 6000, calculated with the reference to the peak of psoralen.

Reference solution Dissolve respectively a quantity of psoralen CRS and isopsoralen CRS, weighed accurately, in methanol to prepare a mixture containing 16 μg of each per ml as the reference solution.

Test solution Grind well the pills, weigh accurately 1 g in a stopper conical flask, add accurately 100 ml of 70% methanol, stopper well, and weigh. Ultrasonicate (power,

300 W; frequency, 33 kHz) for 20 minutes, cool, weigh again, replenish the lost weight with 70% methanol, mix well, filter and use the successive filtrate as the test solution.

Procedure Inject accurately 10 μl of each of the reference solution and the test solution into the column, respectively, and calculate the content.

It contains not less than 3.0 mg of the total amount of psoralen ($C_{11}H_6O_3$) and isopsoralen ($C_{11}H_6O_3$) per gram, referred to Fructus Psorled.

Action To warm the kidney and disperse *cold*, astringe the intestines to check diarrhea.

Indications Diarrhea due to a deficiency of *kidney-yang* with manifestations of borborygmus, abdominal bloating, or dawn diarrhea, poor appetite, indigestion, or chronic diarrhea with sallow complexion and cold limbs.

Usage and dosage 9 g, 1-2 times a day.

Storage Preserve in tightly closed containers, protected from moisture.

Siwei Tumuxiang San (四味土木香散)

Siwei Tumuxiang Powder

Siwei Tumuxiang Powder is a prescription used by Mongolian Nationality.

Ingredients Radix Inulae Racfmosae 200 g; Radix Sophorae Flavescentis (barked) 200 g; Caulis Rubi Idaei (barked and pithed) 100 g; Rhizoma Kaempferiae 50 g.

Procedure Pulverize the above four ingredients to coarse powder, sift and mix thoroughly.

Description A yellowish-white powder; odour, aromatic; taste, extremely bitter and slightly astringent.

Identification (1) Starch granules rounded, elliptical or subtriangle, 10-30 μm in diameter, sometimes showing striations. Parenchymatous cells colourless, oblong or long polygonal, containing fan-shaped inulin masses. Fibre bundles colourless, surrounded by parenchymatous cells containing prisms of calcium oxalate, forming crystal fibres.

(2) Take 0.5 g of the powder, add 4 ml of methanol, tightly stopper, extract by shaking, allow to stand for 30 minutes, filter and use the filtrate as the test solution. Dissolve alantolactone CRS and isoalantolactone CRS in methanol to prepare a mixture containing 2 mg of each per ml as the reference solution. Carry out the method for thin layer chromatography (Appendix Ⅵ B), using silica gel G mixed with 0.25% solution of silver nitrate as the coating substance and a mixture of petroleum ether (60-90℃), benzene and ethyl acetate (5∶1∶1) as the mobile phase. Apply separately 5 μl of the test solution and the reference solution to the plate. After developing and removal of the plate, dry in air, spray with 5% anise aldehyde in sulfuric acid and heat to the spots clear. Two bluish-purple spots in the chromatogram obtained with the test solution correspond in position and colour to the spots in the chromatogram obtained with the reference solution.

(3) Take 1 g of the powder, add 25 ml of chloroform and 0.3 ml of concentrated ammonia TS, allow to stand overnight, filter, evaporate the filtrate to the dryness and dissolve the residue in 0.5 ml of chloroform as the test solution. Dissolve matrine CRS and sophoridine CRS in ethanol to prepare a mixture containing 1 mg of each per ml as the reference solution. Carry out the method for thin layer chromatography (Appendix Ⅵ B), using silica gel G mixed with 2% solution of sodium hydroxide as the coating substance and a mixture of benzene, acetone and methanol (8∶3∶0.5) as the mobile phase. Apply separately 6 μl of the test solution and the reference solution to the plate. After developing to 8 cm and removal of the plate, dry in air, and then using the upper layer of the mixture of toluene, ethyl acetate, methanol and water (2∶4∶2∶1), stored at 10℃, as the mobile phase. After developing to the same distance and removal of the plate, dry in air, spray with potassium heptaiodobismuthate TS. The orange-red spots in the chromatogram obtained with the test solution correspond in position and colour to the spots in the chromatogram obtained with the reference solution.

(4) Take 3 g of the powder, add 20 ml of methanol, ultrasonicate for 10 minutes, filter and use the filtrate as the test solution. Dissolve ethyl-*p*-methoxycinnamate CRS in methanol to prepare a solution containing 5 mg per ml as the reference solution. Carry out the method for thin layer chromatography (Appendix Ⅵ B), using silica gel GF_{254} as the coating substance and a mixture of hexane and ethyl acetate (18∶1) as the mobile phase. Apply separately 4 μl of the test solution and the reference solution to the plate. After developing and removal of the plate, dry in air, examine under ultraviolet light at 254 nm. The spot in the chromatogram obtained with the test solution corresponds in position and colour to the spot in the chromatogram obtained with the reference solution.

Other requirements Comply with the general requirements for teas (Appendix Ⅰ T).

Action To cure exterior syndromes in epidemic diseases.

Indications Epidemic diseases at the early stage with chills, fever, headache, cough, sore throat and chest pain.

Usage and dosage 2.5-3.6 g, 2-3 times a day in decoction form.

Strength 20 g per pack

Storage Preserve in tightly closed containers, protected from moisture.

Siwei Zhenceng Bingpeng Diyanye (四味珍层冰硼滴眼液)

Siwei Zhenceng Bingpeng Eye Drops

Ingredients Pearl Powder; Borneolum, Borax; Boric Acid.

Procedure To Pearl Powder, add the distilled water, stir well, heat to boil, macerate warmly for 48 hours with stirring one time per 2 hours, allow to cool, and filter. Evaporate the filtrate to an appropriate quantity, allow to cool, filter, and examine the total amount of nitrogen. Dissolve borax, Boric Acid and a quantity of sodium chloride in water by heating and stirring, add warmly an appropriate quantity of ethylene glycol monophenyl ether and the above solution of the pearl powder, stir well, heat to 100℃ for 30 minutes, and allow to cool. Dissolve Borneolum in an appropriate quantity of ethanol, add slowly the above solution with stirring, stir well, dilute to volume with the distilled water, mix well and filter.

Description A clear, nearly colourless or pale yellow liquid; odour, aromatic.

Identification (1) To 1 ml, add 2 drops of 10% solution of sodium hydroxide, shake well, add dropwise 0.5% cupric sulfate TS, shake well; a violet-red colour is produced.

(2) To 1 ml, add 3 ml of sulfuric acid, shake well, add

12 ml of methanol, fire; flame with green colour edge is produced.
(3) To 15 ml, extract with two 10-ml quantities of ether, combine the extracts, evaporate to 2 ml as the test solution. Dissolve 2 mg of (+) borneol CRS in ether to prepare a solution containing 1 mg per ml as the reference solution. Carry out the method for thin layer chromatography (Appendix Ⅵ B), using silica gel G as the coating substance and petroleum ether (30-60℃) and ethyl acetate (9 : 1) as the mobile phase. Apply separately 2 μl of each of the two solutions to a plate. After developing and removal of the plate, dry in air, spray with 1% vanillin of 10% sulfuric acid in ethanol, heat at 105℃ until the spots clear. The spot in the chromatogram obtained with the test solution corresponds in position and colour to the spot in the chromatogram obtained with the reference solution.
(4) To 15 ml, add 0.3 ml of sulfuric acid, heat on a water bath for 2 hours, stand to cool, apply to a column of hydrogen type of cation exchange resin (1.5 cm in diameter, 10 cm high), wash with 200 ml of water, discard the washing, elute with 100 ml of 10% solution of ammonia, collect the eluate, evaporate to dryness, and dissolve with 1 ml of dilute ethanol as the test solution. Dissolve a quantity of DL-aminopropionic acid CRS and glycine CRS with dilute ethanol to prepare a mixture solution as the reference solution. Carry out the method for thin layer chromatography (Appendix Ⅵ B), using silica gel G mixed with sodium carboxymethylcellulose as the coating substance and a mixture of *n*-butanol, glacial acetic acid and water (4∶1∶1) as the mobile phase. Apply separately 4 μl of the test solutions and 1 μl of the reference solution to the plate. After developing and removal of the plate, dry in air, spray with ninhydrin TS and heat at 105℃ to spots clear. The spots in the chromatogram obtained with the test solution correspond in position and colour to the spots in the chromatogram obtained with the reference solution.

pH value 7.0-7.8 (Appendix Ⅶ G).

Other requirements Comply with general requirements for eye preparation (Appendix Ⅰ Y).

Assay ***Total Nitrogen*** Measure accurately 10 ml, carry out the method for the determination of Nitrogen (Appendix Ⅸ L, Method 2).
It contains not less than 93 μg and not more than 107 μg per ml of total amount of nitrogen.

Borneolum Carry out the method for gas chromatography (Appendix Ⅵ E).

Chromatographic system and system suitability Use a column packed with 10% polyethylene glycol (PEG)-20 M as the stationary phase, column temperature gradient: initial temperature 140℃, maintain 12 minutes, increase at 10℃ per minute to 170℃, maintain 10 minutes. The number of theoretical plates of the column is not less than 1900, calculated with reference to the peak of (+)-borneol.

Correction factor Dissolve a quantity of methylsalicylate, accurately weighed, in ethyl acetate to prepare a solution containing 1 mg per ml as internal standard solution. Dissolve a quantity of (+)-borneol CRS, accurately weighed, in a 25 ml volumetric flask, dissolve with the internal standard solution and dilute to volume. Inject accurately 2 μl of the solution into the column, and calculate the correction factor.

Procedure Measure accurately 5 ml of the eye drops in a stopper tube, add accurately 5 ml of the internal standard solution, shake, and extract. Stand for layer separation, separate the supernatant liquid, inject 2 μl into the column and calculate the content.
It contains not less than 0.28 mg of (+)-borneol ($C_{10}H_{18}O$) per ml, referred to Borneolum.

Action To clear *heat* and relieve spasm, and remove nebula to improve vision.

Indications Unable to stare, mild distending pain of eyes, ophthalmalgia, or juvenile decline of distant vision due to a deficiency of *liver-yin* and abundance of *liver-qi*; juvenile pseudomyopia, asthenopia and mild glaucoma with above symptoms.

Usage and dosage Drop inside the eyelids. 1-2 drops, 3-5 times a day.

Strength (1) 8 ml per bottle (2) 15 ml per bottle

Storage Preserve in tightly closed container, stored in a cool place.

Siwu Heji (四物合剂)

Siwu Mixture

Ingredients Radix Angelicae Sinensis 250 g; Rhizoma Chuanxiong 250 g; Radix Paeoniae Alba 250 g; Radix Rehmanniae Praeparata 250 g.

Procedure Macerate Radix Agelicae Sinensis and Rhizoma Chuanxiong for 0.5 hour, steam distill, collect 250 ml of the distillation, store the distillation aqueous liquid for later use. Decoct the drug residue left by distillation, Radix Paeoniae Rubra and Radix Rehmanniae Praeparata with water for 3 times, 1 hour for the first time, 1.5 hour for the second and third times respectively, combine the decoction, filter, combine the filtrate and the distillation aqueous liquid, evaporate to sufficient quantity, add ethanol to a content of 55% ethanol, allow to stand for 24 hour, filter, recover the ethanol, evaporate to a thin extract with a relative density of 1.26-1.30 (55-65℃), add the above distillation, 3 g of sodium benzoate and a quantity of correctant, add water to 1000 ml, filter and pack.

Description Brownish-red or dark brown liquid; odour, aromatic; taste, slightly bitter and slightly sweet.

Identification (1) Extract 20 ml of the mixture with three 20-ml quantities of ether, combine the ether extracts, evaporate to dryness, dissolve the residue in 1 ml of ethyl acetate as the test solution. To 0.5 g of Radix Angelicae Sinensis reference drug and Rhizoma Chuanxiong reference drugs add respectively 15 ml of ether, ultrasonicate for 5 minutes, filter, evaporate the filtrates to dryness, dissolve the residue in 1 ml of ethyl acetate as the reference drug solutions. Carry out the method for thin layer chromatography (Appendix Ⅵ B), using silica gel G as the coating substance and a mixture of *n*-hexane and ethyl acetate (9∶1) as the mobile phase. Apply separately 5 μl of each of above three solutions to the plate. After developing and removal of the plate, dry in air, examine under ultraviolet light at 365 nm. The main fluorescence spots in the chromatogram obtained with the test solution correspond in position and colour to the spots in the chromatogram obtained with the reference drug solutions.
(2) Extract the aqueous liquid obtained under the test of Identification (1) with two 20-ml quantities of *n*-butanol saturated with water, combine the *n*-butanol extracts, wash with water saturated with *n*-butanol for 2 times, evaporate the *n*-butanol extract to dryness, dissolve the residue in 1 ml of ethanol as the test solution. Dissolve paeoniflorin CRS in ethanol to prepare a solution containing 2 mg per ml as the reference solution. Carry out the method for thin layer

chromatography (Appendix Ⅵ B), using silica gel G as the coating substance and a mixture of chloroform, ethyl acetate, methanol and formic acid (40∶5∶10∶0.2) as the mobile phase. Apply separately 5 μl of each of the above two solutions to the plate. After developing and removal of the plate, dry in air. Spray with 5% vanillin in sulfuric acid, heat at 105℃ to the spots clear. The spot in the chromatogram obtained with the test solution corresponds in position and colour to the spot in the chromatogram obtained with the reference solution.

(3) Extract 30 ml of the mixture with two 20-ml of ethyl acetate, combine the ethyl acetate extracts and evaporate to about 1 ml as the test solution. Prepare a solution of 3 g of Radix Rehmanniae reference drug, add 60 ml of water, decoct for 1 hour, filter, and the filtrate in the same manner as the reference drug solution. Carry out the method for thin layer chromatography (Appendix Ⅵ B), using silica gel G as the coating substance and the mixture of toluene and ethyl acetate (1∶1) as the mobile phase. Apply separately 5-10 μl of the test solution and the reference drug solution to the plate. After developing and removal of the plate, dry in air, and spray with Dinitriophenylhydrazine TS. The main yellowish-brown spots in the chromatogram obtained with the test solution correspond in position and colour to the spots in the chromatogram obtained with the reference drug solution.

Relative density Not less than 1.06 (Appendix Ⅶ A).

Other requirements Comply with the general requirements for mixtures (Appendix Ⅰ J).

Assay Carry out the method for high performance liquid chromatography (Appendix Ⅵ D).

Chromatographic system and system suitability Use octadecylsilane bonded silica gel as the stationary phase and a mixture of isopropanol, methanol, acetic acid and water (2∶25∶2∶71) as the mobile phase. As detector a spectrophotometer set at 230 nm. Maitain the column temperature at 35℃. The number of theoretical plates of the column is not less than 2000, calculated with reference to the peak of paeoniflorin.

Reference solution Dissolve a quantity of paeoniflorin CRS, weighed accurately, in water to prepare a solution containing 0.1 mg per ml as the reference solution.

Test solution Measure accurately 1 ml of the mixture in a 25 ml volumetric flask, dilute with water to the volume, mix thoroughly, filter and use the filtrate as the test solution.

Procedure Inject accurately 10 μl of each of the reference solution and the test solution into the column and calculate the content.

It contains not less than 1.6 mg of paeoniflorin ($C_{23}H_{28}O_{11}$) per ml, referred to Radix Paeoniae Alba.

Action To nourish blood and regulate menstruation.

Indications Sallow complexion, dizziness, blurred vision, palpitation, shortness of breath, and menstrual disorders due to blood deficiency.

Usage and dosage 10-15 ml, 3 times a day.

Strength (1) 10 ml per phial (2) 100 ml per bottle

Storage Tightly closed, stored in a cool and dark place.

Sizheng Wan
(四正丸)

Sizheng Pills

Ingredients Herba Pogostemonis 90 g; Herba Moslae 90 g; Folium Perillae 90 g; Radix Angelicae Dahuricae 90 g; Lignum Santali Albi 30 g; Fructus Chaenomelis 90 g; Rhizoma Pinelliae Praeparata 90 g; Cortex Magnoliae Officinalis (stir-baked with ginger juice) 90 g; Pericarpium Arecae 90 g; Pericarpium Citri Reticulatiae 90 g; Rhizoma Atractylodis Macrocephalae (processed with bran) 90 g; Radix Platycodonis 90 g; Poria 90 g; Semen Arecae 30 g; Fructus Aurantii (stir-baked with bran) 90 g; Fructus Crataegi (stir-baked) 30 g; Massa Medicata Fermentata (stir-baked with bran) 90 g; Fructus Hordei Germinatus (stir-baked) 30 g; Semen Lablab Album (removed from testa) 90 g; Radix et Rhizoma Glycyrrhizae 90 g.

Procedure Pulverize the above 20 ingredients to fine powder, sift and mix thoroughly. To each 100 g of the powder add 170-180 g of refined honey to make big honeyed pills.

Description Dark brown big honeyed pills; odour, aromatic; taste, sweet and slightly bitter.

Identification (1) Microscopical: Mesophyll tissues containing tinny clusters of calcium oxalate, 4-8 μm in diameter. Irregular branched masses colourless, dissolved gradually on mounting in chloral hydrate TS; hyphae colourless or pale brown, 4-6 μm in diameter. Fibres in bundles, thickened and, surrounded by parenchymatous cells containing prisms of calcium oxalate, forming crystal fibres. Pieces of endoblastic cells white, walls thickened, with numerous large subrounded pits.

(2) Grind well 6 g, cut into pieces, with 4 g of kieselguhr, add 30 ml of methanol, ultrasonicate for 10 minutes, and filter. Evaporate the filtrate to dryness, dissolve the residue in 20 ml of dilute hydrochloric acid, and extract with three 20-ml quantities of chloroform. Combine the chloroform extracts, then extract with three 20-ml quantities of 2% solution of sodium hydroxide. Combine the sodium hydroxide extracts, adjust to pH 1-2 with hydrochloric acid. Extract with three 20-ml quantities of chloroform. Combine the chloroform extracts, dehydrate with anhydrous sodium sulphate, evaporate to dryness, and dissolve the residue in 0.5 ml of methanol as the test solution. Dissolve magnolol CRS and honokiol CRS in methanol to prepare a mixture containing 1 mg of each per ml as the reference solution. Carry out the method for thin layer chromatography (Appendix Ⅵ B), using silica gel G as the coating substance and a mixture of benzene and methanol (27∶1) as the mobile phase. Apply separately 5 μl of each of the two solutions to the plate. After developing and removal of the plate, dry in air. Spray with 5% vanillin in sulphuric acid and heat at 105℃ for several minutes. The spots in the chromatogram obtained with the test solution correspond in position and colour to the spots in the chromatogram obtained with the reference solution.

Other requirements Comply with the general requirements for pills (Appendix Ⅰ A).

Assay Carry out the method for high performance liquid chromatography (Appendix Ⅵ D).

Chromatographic system and system suitability Use octadecylsilane bonded silica gel as the stationary phase and a mixture of methanol and 0.5% solution of acetic acid (39∶

61) as the mobile phase. As detector a spectrophotometer set at 283 nm. Maintain the column temperature at 40℃. The number of theoretical plates of the column is not less than 2500, calculated with the reference to the peak of hesperidine.

Reference solution Dissolve ammonium hesperidine CRS in methanol to prepare a solution containing 40 μg per ml as the reference solution.

Test solution Pulverize 2 g of the pills, obtained under the test of weight variation, weigh accurately to a stopper conical flask, add accurately 50 ml of methanol, weigh, ultrasonicate (power, 250 W; frequency, 33 kHz) for 45 minutes. Allow to cool, weigh again, replenish the lost weight with methanol, mix well, filter and use the filtrate as the test solution.

Procedure Inject accurately 10 μl of each of the reference solution and the test solution into the column, and calculate the content.
It contains not less than 7.0 mg of hesperidine ($C_{28}H_{34}O_{15}$) per pill, referred to Pericarpium Citri Reticulatiae and Fructus Aurantii.

Action To clear *summer-heat* and release the exterior, and resolve *dampness* to arrest diarrhea.

Indications Dizziness, heavy body, aversion to cold and fever, nausea, vomiting, poor appetite, abdominal bloating and diarrhea due to retention of *dampness* in the interior and affliction from external *wind-cold*.

Usage and dosage 2 pills, 2 times a day, taken with ginger soup or boiled water.

Strength 6 g per pill

Storage Preserve in tightly closed containers.

Songling Xuemaikang Jiaonang (松龄血脉康胶囊)

Songling Xuemaikang Capsules

Ingredients Song Leaf Recence; Radix Puerariae Lobatae; Pearl Powder.

Procedure Decoct Song Leaf Recence and Radix Puerariae Lobatae with water twice, 1.5 hours for each time, filter, combine the filtrate, concentrate to a quantity, dry by spraying, add Pearl Powder; a quantity of starch; talcum powder and magnesium stearate, mix well, pack into capsules.

Description Capsules containing pale brown to brown powder; odour, slight; taste, bitter.

Identification (1) To 3 g of the contents, add 50 ml of water, macerate for 2 hours, and filter, add 10 g of polyamide to the filtrate, stir well, macerate for 40 minutes, filter. Wash the polyamide with water to the washing nearly colourless, filter, discard the filtrate, macerate the residue with 30 ml of acetone for 12 hour, filter. Evaporate the filtrate to dryness, and dissolve the residue in 2 ml of methanol as the test solution. Dissolve puerarin CRS in methanol to prepare a solution containing 1 mg per ml as the reference solution. Carry out the method for thin layer chromatography (Appendix Ⅵ B), using silica gel G mixed with sodium carboxymethyl cellulose as the coating substance, and a mixture of chloroform, ethyl acetate, methanol, diethylamine and water (13∶20∶14∶1∶5) as the mobile phase. Apply separately 5 μl of the above two solutions to the plate. After developing and removal of the plate, dry in air. Examine under ultraviolet light at 365 nm. The fluorescent spot in the chromatogram obtained with the test solution corresponds in position and colour to the spot in the chromatogram obtained with the reference solution.
(2) To 5 g of Song Leaf reference drug, add 100 ml of water, boil for 30 minutes, cool and filter. Prepare the filtrate in the same manner as described under the test solution obtained under the test of Identification (1), beginning at the words "add 10 g of polyamide", to prepare a solution as the reference drug solution. Carry out the method for thin layer chromatography (Appendix Ⅵ B), using silica gel G mixed with sodium carboxymethyl cellulose as the coating substance, and a mixture of chloroform, ethyl acetate and formic acid (14∶6∶1) as the mobile phase. Apply separately 10 μl of the test solution of the Identification (1) and 10 μl of the reference drug solution to the plate. After developing and removal of the plate, dry in air. Expose to ammonia vapour, and examine under ultraviolet light at 365 nm. The fluorescent spot in the chromatogram obtained with the test solution corresponds in position and colour to the spot in the chromatogram obtained with the reference drug solution.

Other requirements Comply with the general requirements for capsules (Appendix Ⅰ L).

Assay Carry out the method for high performance liquid chromatography (Appendix Ⅵ D).

Chromatographic system and system suitability Use Octadecylsilane bonded silica gel as the stationary phase and a mixture of methanol, acetic acid and water (25∶3∶72) as the mobile phase. As detector a spectrophotometer set at 250 nm. The number of theoretical plates of the column is not less than 2500, calculated with the reference to the peak of puerarin.

Reference solution Dissolve a quantity of puerarin CRS, accurately weighed, in dilute ethanol to prepare a solution containing 40 μg per ml.

Test solution Weigh accurately about 0.15 g of the mixed contents, obtained under the test of weight variation, place in a stopper conical flask, add accurately 50 ml of dilute ethanol, weigh and ultrasonicate (power, 250 W; frequency, 50 kHz) for 30 minutes, allow to cool, weigh again, replenish the lost weight with dilute ethanol, mix well and filter, using the filtrate as the test solution.

Procedure Inject accurately 10 μl of each of the reference solution and the test solution into the column, calculate the content.
It contains not less than 7.5 mg of puerarin ($C_{21}H_{20}O_9$) per capsule, referred to Radix Puerariae.

Action To pacify the liver to restrain hyperactivity of *yang*, and anchor the mind.

Indications Headache, dizziness, restlessness, palpitation, insomnia due to hyperactivity of *liver-yang*; hypertension and primary hyperlipemia with above symptoms.

Usage and dosage 3 capsules, 3 times a day, or follow doctor's advice.

Strength 0.5 g per capsule

Storage Preserve in tightly closed containers.

Suhexiang Wan
(苏合香丸)

Suhexiang Pills

Ingredients Styrax 50 g; Benzoinum 100 g; Borneolum Syntheticum 50 g; Pulvis Cornus Bubali Concentratus 200 g; Moschus 75 g; Lignum Santali Albi 100 g; Lignum Aquilariae Resinatum 100 g; Flos Caryophylli 100 g; Rhizoma Cyperi 100 g; Radix Aucklandiae 100 g; Olibanum (processed) 100 g; Fructus Piperis Longi 100 g; Rhizoma Atractylodis Macrocephalae 100 g; Fructus Chebulae (cored) 100 g; Cinnabaris 100 g.

Procedure Levigate Cinnabaris to very fine powder. Pulverize the other ingredients except Styrax, Moschus, Borneolum Syntheticum and Pulvis Cornus Bubali Concentratus, to fine powder. Triturate Moschus, Borneolum Syntheticum and Pulvis Cornus Bubali Concentratus with the above powders, sift and mix thoroughly. Melt Styrax, mix well with the above powder, add a quantity of refined honey and water to make 960 water-honeyed pills and dry at a lower temperature; or add a quantity of refined honey to make 960 big honeyed pills.

Description Vermilion water-honeyed pills or ochre big honeyed pills; odour, aromatic, taste, slightly bitter and pungent.

Identification (1) Microscopical: Secretory cells subrounded, containing yellowish-brown to reddish-brown secretion and surrounded by radially arranged cells. Crystal cells square or rectangular, with thickened and lignified walls, striation well-defined containing prisms of calcium oxalate. Bordered pitted vessels with dense pits, containing pale yellow or yellowish-brown resinous contents. Fibre layers of pericarp pale yellow, obliquely crisscrossed, with thin and pitted walls. Pollen grains triangular, about 16 μm in diameter. Irregular fragments greyish white pale greyish-yellow, slightly lustrous, densely covered with minute greyish-brown granules and irregular longitudinal clefts on the surface. Irregular fine granules dark brownish-red, lustrous, with dark black edge.

(2) To 0.3 g of the pills, pulverize the water-honeyed pills to fine powder or cut the big-honeyed pills into pieces, add 15 ml of ethyl acetate, ultrasonicate for 2 minutes and filter. Concentrate the filtrate to almost dryness, and then dissolve in 0.5 ml of ethyl acetate as the test solution. Dissolve a mixture of (±)-borneol and (±)-isoborneol CRS in ethyl acetate to prepare a mixture containing 2.5 mg per ml as the reference solution. Carry out the method for thin layer chromatography (Appendix Ⅵ B), using silica gel G as the coating substance and a mixture of benzene and acetone (9∶1) as the mobile phase. Apply separately 2 μl of each of the two solutions to the plate. After developing and removal of the plate, and dry in air. Spray with 5% vanillin in sulfuric acid and heat to the spots clear. The spots in the chromatogram obtained with the test solution correspond in position and colour to the spots in the chromatogram obtained with the reference solution.

(3) To 1 g of the pills, pulverize the water-honeyed pills to fine powder or cut the big honeyed pills into pieces, add 25 ml of chloroform, ultrasonicate for 30 minutes, and filter. Evaporate the filtrate to dryness, and dissolve the residue in 1 ml of chloroform as the test solution. Dissolve piperine CRS in chloroform to prepare a solution containing 2 mg per ml as the reference solution. Carry out the method for thin layer chromatography (Appendix Ⅵ B), using silica gel G as the coating substance and a mixture of cyclohexane and ethyl acetate (1∶1) as the mobile phase. Apply separately to the plate 5 μl of each of the two solutions. After developing and removal of the plate, and dry in air. Spray with a solution of sulfuric acid in ethanol (1→10), and examine under ultraviolet light at 365 nm. The fluorescent spot in the chromatogram obtained with the test solution corresponds in position and colour to the fluorescent spot in the chromatogram obtained with the reference solution.

(4) Pulverize 1 g of the pills, pulverize the water-honeyed pills to fine powder or cut the big honeyed pills into pieces, add 5 ml of ether, shake and filter, use the filtrate as the test solution. Dissolve muscone CRS in ether to prepare a solution containing 0.1 mg per ml as the reference solution. Carry out the method for gas chromatography (Appendix Ⅵ E), using a 2 m long column packed with a mixture of 1.64% polyethylene glycol (PEG)-20M and 1.32% methyl polysiloxane (SE-30) as the stationary phase, maintain the column temperature at 180℃. Inject a quantity volume of the test solution and the reference solution respectively into the column, the retention time of the peaks obtained with the test solution and the reference solution is concordant with each other.

(5) To 6 g of the pills, pulverize the water-honeyed pills to fine powder or cut the big-honeyed pills into pieces, mix well with 3 g of kieselguhr, add 50 ml of ether, ultrasonicate for 20 minutes, filter, evaporate the filtrate to dryness, dissolve the residue in 1 ml of ether, apply to a column (1.5 cm in inner diameter) packed with neutral alumina (100-200 mesh, 8 g). Elute with 30 ml of ether, and collect the eluates. Evaporate to dryness and dissolve the residue in 1 ml of petroleum ether (60-90℃) as the test solution. Dissolve Styrax reference drug in petroleum ether (60-90℃) to prepare a solution containing 25 μl per ml as the reference drug solution. Carry out the method for thin layer chromatography (Appendix Ⅵ B), using silica gel GF_{254} mixed with sodium carboxymethylcellulose as the coating substance and a mixture of petroleum ether (30-60℃), *n*-hexane, ethyl acetate and formic acid (10∶30∶15∶1) as the mobile phase. Apply separately 3 μl of the test solution and the reference solution to the plate. After developing and removal of the plate, dry in air, macerate in the solution of sulphuric acid in ethanol (1→10) for a moment, remove, blow to dry, heat at 105℃ to the spots clear, examine under the ultraviolet light at 254 nm. The main fluorescent spots in the chromatogram obtained with the test solution correspond in position and colour to the spots in the chromatogram obtained with the reference drug solution.

(6) To 6 g of the pills, pulverize the water-honeyed pills to fine powder or cut the big-honeyed pills into pieces, mix well with 3 g of kieselguhr, add 50 ml of ethyl acetate, ultrasonicate for 20 minutes, filter, evaporate the filtrate to dryness, dissolve the residue in 25 ml of water by ultrasonicating, filter, wash the residue with two 20-ml quantities of *n*-butanol saturated with water, filter, combine the filtrate and the above filtrate, shake. Separate the *n*-butanol extracts, wash with two 30-ml quantities of water saturated with *n*-butanol. Evaporate the n-butanol extracts to dryness and dissolve the residue in 1 ml of ethyl acetate as the test solution. To 1 g of Fructus Chebulae reference drug, add 20 ml of ethyl acetate, ultrasonicate for 20 minutes, filter and use the filtrate as the reference drug solution. Dissolve gallic acid CRS in ethyl acetate to prepare a solution containing 0.3 mg per ml as the reference solution. Carry out the method for thin layer chromatography (Appendix Ⅵ B), using silica gel G mixed with sodium carboxymethylcellulose as the coating substance and a mixture of chloroform, ethyl acetate and formic acid (5∶4∶1) as the mobile phase. Apply separately 3 μl of the test solution, the reference drug solution, and the reference

solution to the plate. After developing and removal of the plate, dry in air, spray with 2% ferric chloride in ethanol. The spots in the chromatogram obtained with the test solution correspond in position and colour to the spots in the chromatogram obtained with the reference drug solution and reference solution.

(7) Apply the test solution obtained under the test of Identification (6) to a column (1.5 cm in inner diameter) packed with neutral alumina (100-200 mesh, 6 g). Elute with 80 ml of ethyl acetate, and collect the eluates. Evaporate to dryness and dissolve the residue in 1 ml of ethyl acetate as the test solution. To 0.5 g of Radix Aucklandiae reference drug, add 20 ml of ethyl acetate, ultrasonicate for 20 minutes, filter and use the filtrate as the reference drug solution. Carry out the method for thin layer chromatography (Appendix Ⅵ B), using silica gel G mixed with sodium carboxymethylcellulose as the coating substance and a mixture of petroleum ether (60-90℃) and ethyl acetate (17∶3) as the mobile phase. Apply separately 5 μl of the test solution and the reference drug solution to the plate. After developing and removal of the plate, dry in air, spray with a solution of sulphuric acid and ethanol (1→10), heat at 105℃ to the spots clear. The spots in the chromatogram obtained with the test solution correspond in position and colour to the spots in the chromatogram obtained with the reference drug solution.

Other requirements Comply with the general requirements for pills (Appendix Ⅰ A).

Action To resuscitate with aromatics, and move *qi* to kill pain.

Indications Syncope or coma due to *phlegm*, hemiplegia in stroke, immobilized limbs, sunstroke and pain in the heart and stomach due to *phlegm* misting the heart.

Usage and dosage 1 pill, 1-2 times a day.

Precaution Contraindicated for pregnant women.

Storage Preserve in tightly closed containers.

Suoyang Gujing Wan
(锁阳固精丸)

Suoyang Gujing Pills

Ingredients Herba Cynomorii 20 g; Herba Cistanches (steamed) 25 g; Radix Morindae Officinalis (processed) 30 g; Fructus Psoraleae (stir-baked with salt) 25 g; Semen Cuscutae 20 g; Cortex Eucommiae (carbonized) 25 g; Fructus Anisi Stellati 25 g; Semen Allii Tuberosi 20 g; Semen Euryales (stir-baked) 20 g; Semen Nelumbinis 20 g; Stamen Nelumbinis 25 g; Concha Ostreae (calcined) 20 g; Os Dragonis (calcined) 20 g; Cornu Cervi Degelatinatum 20 g; Radix Rehmanniae Praeparata 56 g; Fructus Corni (processed) 17 g; Cortex Moutan 11 g; Rhizoma Dioscoreae 56 g; Poria 11 g; Rhizoma Alismatis 11 g; Rhizoma Anemarrhenae 4 g; Cortex Phellodendri 4 g; Radix Achyranthis Bidentatae 20 g; Halitum 25 g.

Procedure Pulverize the above twenty-four ingredients to fine powder, sift, mix thoroughly. To each 100 g of powder add 30-40 g of refined honey and a quantity of water to make water-honeyed pills, dry, coat with corn protein, dry in air; or add 110-130 g of refined honey to make big honeyed pills.

Description Brown to blackish-brown water-honeyed pills or big honeyed pills; odour, slight; taste, bitter.

Identification (1) Microscopical: Irregular branched masses, colourless, dissolved in chloral hydrate solution; hyphae colourless or pale brown, 4-6 μm in diameter. Palisade cells of testa, 2 rows, with inner cells longer than outer ones, and lustrous band. Stone cells of testa subpolygonal, walls extremely thickened, sinuous, lumina branched, contain brownish-dark content. Stone cells slightly branched or fibre-shaped. Fibre bundles, bright yellow, surrounded by cells containing prisms of calcium oxalate, forming crystal fibres, walls of crystal cells thickened and lignified. Wood fibres in bundles, walls thin, unlignified; pit obliquely fissured, V-shaped or cross-shaped. Rubber slivers strip-shaped or twisted into masses, surface granular. Parenchyma greyish-brown to blackish-brown, cells mostly shrun-ken, and each containing a brown nucleus-like mass. Parenchymatous cells subrounded, pits elliptical, gathered in pit areas. Raphides of calcium oxalate occurring in mucilage cells, 80-240 μm long, needle crystals 2-5 μm in diameter. Needle crystals of calcium oxalate in bundles or scattered, 26-110 μm long. Epidermal cells of pericarp orange-yellow, subpolygonal in surface view, anticlinal walls slightly beaded. Cork cells pale red to slight violet, walls slightly thickened, frequently overlapped. Irregular fragments translucent, edge strongly refractive, surface showing fine, short striations, small holes, and narrow fissures. Irregular fragments pale greyish-brown, some with uneven striations. Irregular fragments colourless or pale yellowish-brown, with fine striations on surface.

(2) Pulverize 6 g of the water-honeyed pills to fine powder, or cut 9 g of the big-honeyed pills into pieces and mix well with 5 g of kieselguhr, add 30 ml of petroleum ether (60-90℃), heat under reflux for 30 minutes, filter, dry the drug residue in the air, add 30 ml of ethyl acetate, heat under reflux for 30 minutes, filter. Evaporate the filtrate to dryness and dissolve the residue in 1 ml of ethyl acetate as the test solution. Prepare a solution of 0.2 g of Fructus Psoraleae reference drug in the same manner as the reference drug solution. Dissolve psoralen CRS and isopsoralen CRS in ethyl acetate to prepare a mixture containing 1 mg of each per ml as the reference resolution. Carry out the method for thin layer chromatography (Appendix Ⅵ B), using silica gel G mixed with sodium carboxymethylcellulose as the coating substance and a mixture of petroleum ether (60-90℃), chloroform and ether (5∶5∶1) as the mobile phase. Apply separately 10 μl of the test solution and the reference drug solution and 5 μl of the reference solution to the plate. After developing and removal of the plate, dry in air, examine under the ultraviolet light at 365 nm. The fluorescent spots in the chromatogram obtained with the test solution correspond in position and colour to the spots in the chromatogram obtained with the reference drug solution and the reference solution.

(3) Pulverize 6 g of the water-honeyed pills to fine powder, or cut 9 g of the big-honeyed pills into pieces and mix well with 6 g of kieselguhr, add 30 ml of ether, heat under reflux for 1 hour, filter, recover the ether to dryness and dissolve the residue in 1 ml of acetone as the test solution. Dissolve paeonol CRS in acetone to prepare a solution containing 1 mg of per ml as the reference solution. Carry out the method for thin layer chromatography (Appendix Ⅵ B), using silica gel G mixed with sodium carboxymethylcellulose as the coating substance and a mixture of cyclohexane and ethyl acetate (3∶1) as the mobile phase. Apply separately 10-20 μl of the test solution and 5 μl of the reference solution to the plate. After developing and removal of the plate, dry in air, spry with 5% ferric chloride in ethanol acidified with hydrochloride acid, heat to the spots clear. The bluish-brown spot in the chromatogram obtained with the test solution corresponds in position and colour to the spot in the chromatogram obtained with the reference solution.

(4) Pulverize 6 g of the water-honeyed pills to fine powder, or cut 9 g of the big-honeyed pills into pieces, add 30 ml of methanol, ultrasonicate for 30 minutes, filter, evaporate the filtrate to dryness, dissolve the residue in 5 ml of methanol, filter and use the filtrate as the test solution. Prepare a solution of 0.05 g of Cortex Phellodendri Chinensis reference drug in the same manner as the reference drug solution. Dissolve stachydrine hydrochloride CRS in methanol to prepare a solution containing 0.05 mg of per ml as the reference solution. Carry out the method for thin layer chromatography (Appendix Ⅵ B), using silica gel G mixed with sodium carboxymethylcellulose as the coating substance and a mixture of benzene, ethyl acetate, methanol, isopropanol and concentrated ammonia TS (12:6:3:3:1) as the mobile phase. Apply separately 2 μl of the test solution, and 1 μl of each of the reference drug solution and the reference solution to the plate. After developing in the chamber filled with ammonia vapour and removal of the plate, dry in air, examine under the ultraviolet light at 365 nm. The yellow fluorescent spot in the chromatogram obtained with the test solution corresponds in position and colour to the spot in the chromatogram obtained with the reference drug solution and the reference solution.

Other requirements Comply with the general requirements for pills (Appendix Ⅰ A).

Action To warm the kidney to control seminal emission.

Indications Aching and weakness of the lower back and knees, dizziness and tinnitus, seminal emission and premature ejaculation due to insufficiency of *kidney-yang*.

Usage and dosage 6 g of water-honeyed pills, or 1 big honeyed pill, twice a day.

Strength 10 g per 100 water-honeyed pills, 9 g per big honeyed pill

Storage Preserve in tightly closed containers.

Syrups Rhododendri Daurici (消咳喘糖浆, Xiaokechuan Tangjiang)

Dahurian Rhododendron Syrup

Dahurian Rhododendron Syrup is prepared from Folium Rhododendri Daurici.

Procedure Macerate 200 g of Folium Rhododendri Daurici in about 950 ml of 40% ethanol (add 1.9 ml of poly ethylene glycol for the syrups without ethanol) at 30-40℃ for 7 days in a well closed container, stir 2-3 times a day, filter and squeeze the residue. Combine the squeezed solution and the filtrate, recover ethanol for the syrups without ethanol, allow to stand, filter, add 350 g (600 g of sucrose for syrups without ethanol) of sucrose to the filtrate, heat and stir to dissolve, boil for 30 minutes, allow to cool to 30 ℃, add 3 g of potassium sorbate and 0.1 g of menthol, stir to dissolve, add 40% ethanol to (add water for the syrups without ethanol) to 1000 ml, stir well, allow to stand, and filter.

Description A reddish-brown liquid; odour, aromatic; taste, sweet, pungent and bitter.

Identification Extract 25 ml of the syrup with two 15-ml quantities of ether, combine the extract and evaporate to dryness. Dissolve the residue with three 10-ml quantities of 40% ethanol by heating on a water bath, filter while hot, combine the filtrate, evaporate the ethanol on a water bath. Extract the remaining aqueous solution with two 15-ml quantities of ether, combine the ether extract, evaporate to dryness, dissolve the residue in 1 ml of chloroform as the test solution. To 5 g of Folium Rhododendri Daurici reference drug add 50 ml of ether, ultrasonicate for 15 minutes, filter and evaporate the filtrate to dryness. Dissolve the residue in 30 ml of 40% ethanol, and prepare a solution in the same manner as the reference drug solution. Carry out the method for thin layer chromatography (Appendix Ⅵ B), using silica gel G as the coating substance and a mixture of *n*-hexane, ethyl acetate and methanol (5:5:0.2) as the mobile phase. Apply separately to the plate 5 μl of each of the two solutions. After developing and removal the plate, dry in air, and examine under ultraviolet light at 365 nm. The fluorescent spot in the chromatogram obtained with the test solution corresponds in position and colour to the spot in the chromatogram obtained with the reference drug solution.

Ethanol content 20-28 per cent (Appendix Ⅸ M).

Relative density Not less than 1.08 (Appendix Ⅶ A).

Other requirements Comply with the general requirements for syrups (Appendix Ⅰ H).

Assay ***Total flavonoids*** *Reference solution* Weigh accurately 30 mg of rutin CRS, previously dried to constant weight in vacuum at 120℃, place in a 100 ml volumetric flask, dissolve in a quantity of 60% ethanol, dilute to volume, and mix well. Measure accurately 10 ml of the solution to a 50 ml volumetric flask, dilute with 60% ethanol to volume and mix well (containing 60 μg of anhydrous rutin per ml).

Calibration curve Measure accurately 0.5,1,2,3,4 and 5 ml of the reference solution in 10 ml volumetric flask separately, add 2 ml of 0.1 mol/L solution of aluminium chloride, 3 ml of 1 mol/L solution of potassium acetate to each flask, dilute with 60% ethanol to volume, mix well and allow to stand for 30 minutes. Carry out the method for spectrophotometry (Appendix Ⅴ A), using the corresponding solvent as blank, measure the absorbance at 420 nm, plot the calibration curve, using absorbance as ordinate and concentration as abscissa.

Procedure Measure accurately 2 ml of the syrup, transfer to a 50 ml volumetric flask, add 60% ethanol, dilute to volume, and mix well. Measure accurately 1 ml of the solution, transfer to a 10 ml volumetric flask, carry out the procedure as described under preparation of calibration curve, beginning at the words "add 2 ml of 0.1 mol/L aluminium chloride solution" to prepare the test solution. In addition, transfer 2 ml of the syrup, dilute with 60% ethanol to 50 ml. Measure accurately 1 ml of the ethanol solution, add 60% ethanol solution to 10 ml as the blank. Measure the absorbance, read out the weight of rutin (μg) in the test solution from the calibration curve and calculate.

It contains not less than 2.0 mg of total flavonoids per ml, calculated as rutin ($C_{27}H_{30}O_{16}$).

Farrerol Carry out the method for high performance liquid chromatography (Appendix Ⅵ D).

Chromatographic system and system suitability Use octadecylsilane bonded silica gel as the stationary phase and a mixture of methanol and water (60:40) as the mobile phase. As detector a spectrophotometer set at 295 nm. The number of theoretical plates of the column is not less than 3000, calculated with the reference to the peak of farrerol.

Reference solution Dissolve a quantity of farrerol CRS in methanol to prepare a solution containing 10 μg per ml as the reference solution.

Test solution Measure accurately 3 ml of the syrup to a 25

ml volumetric flask, dilute with methanol to the volume, mix well, filter and use the filtrate as the test solution.

Procedure Inject accurately 20 μl of each of the reference solution and the test solution into the column, and calculate the content.

It contains not less than 50 μg of farrerol ($C_{17}H_{16}O_5$) per ml, referred to Folium Rhododendri Daurici.

Action To relieve cough and dyspnea, and expel phlegm.

Indications Cough and dyspnea with expectoration of white phlegm due to phlegm-cold retained in the lung; chronic bronchitis with above symptoms.

Usage and dosage 10 ml, 3 times a day; appropriate reduction of the dosage for children.

Strength (1) 50 ml per bottle (2) 100 ml per bottle

Storage Preserve in tightly closed containers.

Tabellae Acanthopanacis Senticosi (刺五加片, Ciwujia Pian)

Manyprickle Acanthopanax Tablets

Manyprickle Acanthopanax Tablets are the tablets prepared from Extractum Acanthopanacis Senticosi.

Procedure Mix well 150 g of Extractum Acanthopanacis Senticosi with a quantity of excipients, granulate, compress into 1000 tablets, and coat with sugar.

Description Sugar coated tablets with brown core; taste. slightly bitter and astringent.

Identification Triturate 6 tablets, removed sugar coat, to fine powder, add 20 ml of methanol, ultrasonicate for 10 minutes, and filter. Evaporate the filtrate to dryness, and dissolve the residue in 1 ml of methanol as the test solution. To 5 g of Radix et Caulis Acanthopanacis Senticosi dug reference, add 20 ml of methanol, ultrasonicate for 30 minutes, and filter. Evaporate the filtrate to dryness, and dissolve the residue in 1 ml of methanol as the reference drug solution. Dissolve isofraxidin CRS in methanol to prepare a solution containing 1 mg per ml as the reference solution. Carry out the method for thin layer chromatography (Appendix Ⅵ B), using silica gel G as the coating substance and a mixture of chloroform, methanol, and water (8 : 1 : 0.1) as the mobile phase. Apply separately to the plate 5 μl of each of the test solution and the reference drug solution, and 1 μl of the reference solution. After developing and removal of the plate, dry in air, and examine under ultraviolet light at 365 nm. The fluorescent spots in the chromatogram obtained with the test solution correspond in position and colour to the spots in the chromatogram obtained with the reference drug solution and reference solution.

Other requirements Comply with the general requirements for tablets (Appendix Ⅰ D).

Extractive Remove the sugar coats of 10 tablets. weigh accurately and pulverize. Weigh accurately a quantity (equivalent to about 0.75 g of Extractum Acanthopanacis Senticosi) and carry out the hot extraction method for the determination of ethanol soluble extractives (Appendix Ⅹ A) using methanol as the solvent. It contains not less than 80 mg of methanol extractive per tablet.

Assay Carry out the method for high performance liquid chromatography (Appendix Ⅵ D).

Chromatographic system and system suitability Use octadecylsilane bonded silica gel as the stationary phase, and a mixture of methanol and water (20 : 80) as the mobile phase. As detector a spectrophotometer set at 265 nm. The number of theoretical plates of the column is not less than 2000, calculated with the reference to the peak of syringoside.

Reference solution Weigh accurately a quantity of syringoside CRS, dissolve in methanol to prepare a solutions containing 80 μg per ml.

Test solution With 10 tablets, removed sugar coat, pulverize to fine powder, and weigh accurately a quantity of the powder, equivalent to 2 tablets, in a stopper conical flask, add accurately 25 ml of methanol, closely stopper and weigh. Ultrasonicate for 10 minutes (power, 250 W; frequency, 33 kHz), cool, weigh again, replenish the lost weight with methanol, mix well and filter, and use the successive filtrate as the test solution.

Procedure Inject accurately 10 μl of each of the reference

solution and the test solution into the column respectively and measure.
It contains not less than 0.40 mg of syringoside ($C_{17}H_{24}O_9$) per tablet.

Action To replenish *qi* and invigorate the spleen, and nourish the kidney and anchor the mind.

Indications Lassitude, anorexia, aching pain in the lower back and knees, insomnia and dreamfulness due to *yang* deficiency in the spleen and kidney.

Usage and dosage 2-3 tablets, twice a day.

Storage Preserve in tightly closed containers.

Tabellae Andrographitis (穿心莲片, Chuanxinlian Pian)

Common Andrographis Tablets

Common Andrographis Tablets are the tablets prepared from Herba Andrographis.

Procedure To 1000 g of Herba Andrographis add a quantity of 85% ethanol, extract by heating for 2 times, 2 hours each, combine the extract and filter. Recover the ethanol, concentrate, and dry. Add a quantity of excipients, to make granules, compress into 1000 small tablets or 500 big tablets and coat with sugar or film.

Description Sugar or film coated tablets with greyish-brown to dark brown core; taste, bitter.

Identification To 0.5 g of Herba Andrographis reference drug add 30 ml of methanol, ultrasonicate for 30 minutes, filter, concentrate the filtrate to about 5 ml as the reference drug solution. Dissolve dehydroandrographolide CRS in methanol to prepare a solution containing 1 mg per ml as the reference solution. Carry out the method for thin layer chromatography (Appendix Ⅵ B), using silica gel GF_{254} as the coating substance and a mixture of chloroform, ethyl acetate, and methanol (20 : 15 : 2) as the mobile phase. Apply separately to the plate 5 μl of each of the three solutions. After developing below 28℃ and removal of the plate, dry in air. Examine under ultraviolet light at 254 nm, the spots in the chromatogram obtained with the test solution correspond in position and colour to the spots in the chromatogram obtained with the reference drug solution and the reference solution. Spray with a mixture of equal volume of 2% 3,5-dinitrobenzoic acid in ethanol and 2 mol/L solution of potassium hydroxide (freshly prepared), examine in sunlight immediately. The spots in the chromatogram obtained with the test solution correspond in position and colour to the spots in the chromatogram obtained with the reference drug solution and the reference solution.

Other requirements Comply with the general requirements for tablets (Appendix Ⅰ D).

Assay Carry out the method for high performance liquid chromatography (Appendix Ⅵ D).

Chromatographic system and system suitability Use octadecylsilane bonded silica gel as the stationary phase, and a mixture of methanol and water (60 : 40) as the mobile phase. As detector a spectrophotometer set at 254 nm. The number of theoretical plates of the column is not less than 2000, calculated with the reference to the peak of andrographolide.

Reference solution Weigh accurately a quantity of andrographolide CRS, dissolve in methanol to prepare a solution containing 0.1 mg per ml.

Test solution With 20 small tablets or 10 big tablets, pulverize to fine powder, and weigh accurately 0.5 g of the powder in a stopper conical flask, add accurately 25 ml of methanol, closely stopper and weigh. Macerate for 1 hour, and ultrasonicate for 30 minutes (power, 250 W; frequency, 33 kHz), cool, weigh again, replenish the lost weight with methanol, mix well and filter. Measure accurately 10 ml of the successive filtrate, apply to a prepared neutral aluminiaum oxide column (200-300 mesh, 5 g, 1.5 cm in internal diameter) and elute with 20 ml of methanol, collect the eluate to a 50 ml of volumetric flask, dilute with methanol to volume, mix well.

Procedure Inject accurately 10 μl of each of the reference solution and the test solution into the column respectively and measure.
It contains not less than 4.0 mg of andrographolide ($C_{20}H_{28}O_4$) per small tablet, and 8.0 mg per big tablet.

Action To clear *heat-toxicity*, and cool blood and reduce swelling.

Indications Common cold, fever, swollen painful throat, or sores on the mouth and tongue, or whooping cough, cough from consumption, or diarrhea, dysentery, or stranguria with pain, or carbuncles and abscesses due to abundant internal *toxic-heat* or poisonous snake bite.

Usage and dosage 2-3 small tablets, 3-4 times a day; or 1-2 big tablets, 3 times a day.

Storage Preserve in tightly closed containers.

Tabellae Belladonnae (颠茄片, Dianqie Pian)

Belladonna Tablets

Belladonna Tablets are the tablets of Extractum Belladonnae.

Procedure To 10 g of Extractum Belladonnae add a quantity of excipient and compress into 1000 tablets.

Description Pale brown or brown tablets.

Identification (1) Pulverize 10 tablets to fine powder, add 10 ml of ethanol, grind and extract, filter and evaporate the filtrate to dryness. Dissolve the residue in 5 ml of 1% solution of sulfuric acid, filter, adjust the filtrate to alkaline by adding ammonia TS, extract with two 2-ml quantities of chloroform. Combine the chloroform extracts and evaporate to dryness, the residue yields the reactions characteristic of tropane alkaloids (Appendix Ⅳ).
(2) Extract by shaking 20 tablets, pulverized, with 2 ml of concentrated ammonia TS and 25 ml of chloroform, allow to stand overnight. Filter, evaporate the filtrate and add 1 ml of methanol to dissolve the residue as the test solution. Dissolve atropine sulfate CRS in methanol to prepare a solution containing 2 mg per ml as the reference solution. Carry out the method for chromatography (Appendix Ⅵ B), using silica gel G as the coating substance and a mixture of ethyl acetate, methanol and concentrated ammonia TS (17 : 2 : 1) as the mobile phase. Apply separately to the plate 5 μl of each of the two solutions. After developing and removal of the plate, dry in air, spray with dilute potassium Iodobismuthate TS. The spot in the chromatogram obtained with the test solution corresponds in position and colour to the spot in the chromatogram obtained with the reference solution.

Other requirements Comply with the general requirements for tablets (Appendix Ⅰ D).

Action Anticholinergic, to relieve spasm of smooth muscles and inhibit secretion of glands.

Indications Gastric and duodenal ulcer, colicky pain in the gastrointestinal tract, kidney, gallbladder and so on.

Usage and dosage Usual dose, 10-30 mg, 30-90 mg a day; maximum dose, 50 mg, 150 mg a day.

Precaution Contraindicated for glaucoma patients.

Strength 10 mg of Extractum Belladonnae per tablet

Storage Preserve in tightly closed containers.

Tabellae Clinopodii (断血流片, Duanxueliu Pian)

Chinese Clinopodium Tablets

Chinese Clinopodium Tablets are the tablets prepared from Herba Clinopodii.

Procedure Decoct 4500 g of the sections of Herba Clinopodii twice with water, each for 1.5 hours. Combine the decoctions, filter, and evaporate the filtrate to an extract with a relative density of 1.15 (determined at 80℃), add 1.7 volumes of ethanol, mix thoroughly, allow to stand for 24 hours, concentrate the supernatant in vacuum to a thick extract, then dry to a solid extract. Add a quantity of excipients, to make granules and compress into 1000 tablets and coat with sugar or film.

Description Sugarcoated or film coated tablets with brown core; taste, bitter, slightly astringent.

Identification Triturate 2 tablets to fine powder, add 10 ml of methanol, heat under reflux for 30 minutes, and filter. Apply the filtrate to a prepared neutral aluminia oxide column (100-200 mesh, 10 g, 1-1.5 cm in internal diameter) and elute with 40 ml of 40% methanol, collect the eluate, and evaporate the filtrate to dryness. Dissolve the residue in 30 ml of water, and extract with two 20-ml quantities of *n*-butanol saturated with water, combine the *n*-butanol extracts, and wash with two 20-ml quantities of water saturated with *n*-butanol. Evaporate the *n*-butanol extracts to dryness, and dissolve the residue in 1 ml of ethanol as the test solution. Dissolve buddlejasaponin Ⅳ b CRS in methanol to prepare a solution containing 1 mg per ml as the reference solution. Carry out the method for thin layer chromatography (Appendix Ⅵ B), using silica gel G as the coating substance, and a mixture of chloroform, methanol, glacial acetic acid and water (7 ∶ 3 ∶ 1 ∶ 0.3) as the mobile phase. Apply separately to the plate 2 μl of each of the above two solutions. After developing and removal of the plate. dry in air. Spray with a 10% sulfuric acid in ethanol, and heat at 105℃ to the spots clear. The purplish-blue spot in the chromatogram obtained with the test solution corresponds in position and colour to the spot in the chromatogram obtained with the reference solution.

Other requirements Comply with the general requirements for tablets (Appendix Ⅰ D).

Assay Carry out the method for high performance liquid chromatography (Appendix Ⅵ D).

Chromatographic system and system suitability Use octadecylsilane bonded silica gel as the stationary phase, and a mixture of methanol and water (80 ∶ 20) as the mobile phase. As detector a spectrophotometer set at 250 nm. The number of theoretical plates of the column is not less than 3000, calculated with the reference to the peak of buddlejasaponin Ⅳ b.

Reference solution Weigh accurately a quantity of buddlejasaponin Ⅳ b CRS, dissolve in methanol to prepare a solution containing 15 μg per ml.

Test solution To 20 tablets, removed the coats, pulverize to fine powder, and weigh accurately 0.3 g of the powder in a stopper conical flask, add accurately 20 ml of methanol, ultrasonicate for 15 minutes (power, 220 W; frequency, 50 kHz), filter. Add accurately 20 ml of methanol, and ultrasonicate for 15 min again, filter. Combine the filtrate, evaporate to dryness, dissolve the residue in 30 ml of water, and transfer to a separating funnel, extract with four 20-ml quantities of *n*-butanol saturated with water, combine the *n*-butanol extract, wash with two 30-ml quantities of ammonia TS saturated with *n*-butanol. Evaporate *n*-butanol solution to dryness, dissolve the residue in methanol, and transfer to a 100 ml volumetric flask, add methanol to volume, mix well and filter, and use the successive filtrate as the test solution.

Procedure Inject accurately 20 μl of each of the reference solution and the test solution into the column respectively and measure.

It contains not less than 1.2 mg of buddlejasaponin Ⅳ b ($C_{48}H_{78}O_{18}$) per tablet.

Action To cool blood to arrest bleeding.

Indications Hypermenorrhea, metrorrhagia and metrostaxis, hematemesis, epistaxis, hemoptysis, hematuria and hematochezia marked by bright red or purple blood; dysfunctional uterine bleeding, bleeding due to hysteromyoma and various kinds of bleeding, simple purpura and primary thrombocytopenic purpura with above symptoms.

Usage and dosage 3-6 tablets, 3 times a day.

Strength 0.35 g per tablet (film coated tablets)

Storage Preserve in tightly closed containers.

Tabellae Cyclovirobuxinum D (黄杨宁片, Huangyangning Pian)

Cyclovirobuxine D Tablets

Cyclovirobuxine D Tablets are prepared from Cyclovirobuxinum D ($C_{26}H_{46}N_2O$).

Procedure To 0.5 g of Cyclovirobuxine D, add a quantity of excipient, make granules, dry and compress into 1000 tablets or 500 tablets.

Description White or pale yellow tablets; taste, bitter.

Identification (1) Grind a quantity of the tablets to fine powder. To a quantity of the powder (equivalent to 10 mg of Cyclovirobuxine D), add 20 ml of chloroform, stir thoroughly, filter, divide the filtrate into 2 portions and evaporate to dryness on a water bath. Dissolve one portion in 1 ml of a solution of glacial acetic acid (1→20), add 1-2 drops of potassium iodobismuthate TS; a orange precipitate is produced; add 1 ml of ethanol and 2 ml of sulfuric acid in the other portion, a orange colour is produced.

(2) Grind the tablets to fine powder, transfer a quantity of the powder (equivalent to 10 mg of Cyclovirobuxine D) to a separator, add 2 ml each of water and sodium hydroxides TS, stir thoroughly. Extract with 10 ml of chloroform for 10 minutes, stand, separate chloroform layer, filter, use the filtrate as the test solution. Dissolve cyclovirobuxine D CRS in chloroform to prepare a solution containing 1 mg per ml as the reference solution. Carry out the method for thin layer chromatography (Appendix Ⅵ B), using silica gel G

as the coating substance and the upper layer of chloroform, acetone and diethylamide (25 : 20 : 2) as the mobile phase. Apply separately to the plate 10 μl of each of the above two solutions. After developing and removal of the plate, dry in air, spray with dilute potassium iodobismuthate TS. The spot in the chromatogram obtained with the test solution corresponds in position and colour to the spot in the chromatogram obtained with the reference solution.

Content uniformity Transfer separately 10 tablets in volumetric flasks (0.5 mg tablet in 50 ml volumetric flasks, 1 mg tablet in 100 ml volumetric flasks), add respectively 0.05 mol/L sodium dihydrate phosphate BS to volume and stand in a 80℃ water bath for 1.5 hours. Cool to ambient temperature, shake thoroughly, centrifuge for 6 minutes (3000 rpm) and use the supernatant as the test solution. Carry out the method described under Assay and determine the content of each tablet. Compare the content of tablet with average content; not more than 1 tablet with limit of content variation greater than ±15%, and none greater than ±25%.

Other requirements Comply with the general requirements for tablets (Appendix Ⅰ D).

Assay *Reference solution* Weigh accurately 25 mg of cyclovirobuxine D CRS, previously dried to constant weight at 105℃, in a 250 ml volumetric flask, dissolve with 70 ml of methanol, and dilute with 0.05 mol/L sodium dehydrate phosphate BS to volume and mix well. Measure accurately 10 ml to a 100 ml volumetric flask, dilute with 0.05 mol/L sodium dehydrate phosphate BS to volume, and mix well (containing 10 μg Cyclovirobuxine D per ml).

Test solution Weigh accurately 20 tablets and triturate to fine powder. Weigh accurately a quantity of the powder (equivalent to 0.5 g of cyclovirobuxine D) in a 50 ml volumetric flask, add a quantity of 0.05 mol/L sodium dehydrate phosphate BS, stand in a 80℃ water bath for 1.5 hours, cool to ambient temperature, dilute with 0.05 mol/L sodium dehydrate phosphate BS to volume, mix thoroughly, centrifuge for 6 minutes (3000 rpm), use the supernatant as the test solution.

Procedure Measure accurately 5 ml of each of the reference solution and the test solution separately in separators, add accurately 5 ml of bromothymol blue solution (dissolve 18 mg of bromothymol blue with 5 ml of methanol in a 250 ml volumetric flask, dilute with 0.05 mol/L sodium dehydrate phosphate BS to volume and mix well) separately, mix well and add accurately 10 ml of chloroform immediately, shake for 2 minutes, and stand for 1.5 hours. Separate the chloroform layer in test tubes with stopper containing 0.5 g of anhydrous sodium sulfate, shake and stand. Use the supernatant. Carry out the method for spectrophotometry (Appendix Ⅴ A), measure the absorbance of the supernatant at the wavelength of 410 nm and calculate.
It contains not less than 90.0 per cent and not more than 110.0 per cent of the labeled amount of cyclovirobuxine D ($C_{26}H_{46}N_2O$).

Action To move *qi* to promote blood circulation, and dredge meridians to kill pain.

Indications Chest impediment, heart pain, knotted and intermittent pulse due to stagnation of *qi* and blood; coronary heart disease and arrhythmia with above symptoms.

Usage and dosage 1-2 mg, 2-3 times a day.

Strength (1) 0.5 mg of cyclovirobuxine D per tablet
(2) 1 mg of cyclovirobuxine D per tablet

Storage Preserve in well closed containers and protected from light.

Tabellae Desmodii Styracifolii (石淋通片, Shilintong Pian)

Snowbellleaf Tickclover Tablets

Snowbellleaf Tickclover Tablets are the tablets prepared from Herba Desmodii Styracifolii.

Procedure Decoct Herba Desmodii Styracifolii 3125 g with water twice, 1.5 hours each time. Combine the decoctions and filter. Concentrate the filtrate in vacuum, add 5 times quantity of 85% ethanol, stir thoroughly, allow to stand for 24 hours, filter and concentrate the filtrate to a thick extract. Dry to dry extract, add a quantity of excipients, make granules, and compress into 1000 tablets or coat with sugar.

Description Sugar coated tablets with brown core or brown extract tablets; taste, bitter and astringent.

Identification (1) To 1 g, in powder, add 10 ml of 1% solution of hydrochloric acid in 70% ethanol, warm for 10 minutes, filter and evaporate to remove ethanol. Dissolve the residue in 5 ml of water and filter. Transfer 1 ml of the filtrate to two test tubes respectively. To one tube add 2 drops of potassium iodobismuthate TS; an orange red precipitate is produced. To another tube add 2 drops of trinitrophenol TS; a yellow precipitate is produced.
(2) To 1 g of the tablets, triturate to fine powder, add 20 ml of dilute ethanol, ultrasonicate for 20 minutes, and filter, evaporate the ethanol solution to dryness, dissolve the residue in 5 ml of water, and extract with two 15-ml quantities of ethyl acetate, combine ethyl acetate solution, evaporate to dryness, dissolve the residue in 1 ml of dehydrated ethanol as the test solution. To 2 g of Herba Desmodii Styracifolii reference drug, add 30 ml of dilute ethanol, and process to prepare a reference drug solution in the same manner. Carry out the method for thin layer chromatography (Appendix Ⅵ B), using silica gel G mixed with sodium carboxymethyl cellulose, containing 1% sodium hydroxide, as the coating substance, and a mixture of chloroform, methanol and butanone (6 : 1 : 1) as the mobile phase. Apply separately to the plate 2 μl of each of the above two solutions. After developing and removal of the plate, dry in air, and examine under ultraviolet light at 365 nm. The fluorescent spots in the chromatogram obtained with the test solution correspond in position and colour to the spots in the chromatogram obtained with the reference drug solution. Expose the plate to ammonia vapour and examine in sunlight, the colour of the spots turn darker.

Other requirements Comply with the general requirements for tablets (Appendix Ⅰ D).

Action To clear *heat* and induce urination, relieve stranguria and remove urethral calculus.

Indications Stranguria caused by *heat* or urolithiasis due to pouring of *damp-heat* with manifestations of frequent, urgent, and painful urination, or passing sand-like urine; lithangiuria and pyelonephritis with above symptoms.

Usage and dosage 5 tablets, 3 times a day.

Strength 0.12 g of dry extract per tablet

Storage Preserve in tightly closed containers.

Tabellae Folium Crataegi
(益心酮片, Yixintong Pian)

Yixintong Tablets

Yixintong Tablets are prepared by the extracts of Folium Crataegi.

Procedure Extract of 32 g Folium Crataegi, starch 32 g, dextrin 25 g, sucrose 5 g, mix thoroughly, make granules, dry below 60℃. Add 5 g of talcum and 1 g of magnesium stearate, mix thoroughly, compress into 1000 tablets, coat with sugar or film.

Description Sugar coated tablets or film coated tablets with brownish-yellow core; odour, characteristic; taste, astringent and slightly bitter.

Identification Triturate the tablets to fine powder, weigh 0.2 g, add 5 ml of ethanol, ultrasonicate for 5 minutes, and filter. Use the filtrate as the test solution. Dissolve separately rutin CRS and hyperoside CRS in ethanol to prepare two solutions each containing 0.2 mg per ml as the reference solutions. Carry out the method for thin layer chromatography (Appendix Ⅵ B), using polyamide membrane as the coating substance, and a mixture of ethanol, acetone, and water (7 : 5 : 6) as the mobile phase. Apply separately to the plate 1 μl of each of the above two reference solutions and test solution. After developing and removal of the plate, dry in air, and spray with alumina chloride TS, and blow to dryness, examine under ultraviolet light at 365 nm. The fluorescent spots in the chromatogram obtained with the test solution correspond in position and colour to the spots in the chromatogram obtained with the reference solutions.

Other requirements Comply with the general requirements for tablets (Appendix Ⅰ D).

Assay ***Hyperoside*** Carry out the method for hight performance liquid chromatography (Appendix Ⅵ D).

Chromatographic system and system suitability Use octadecylsilane bonded silica gel as the stationary phase, and a mixture of methanol, acetonitrile, tetrahydrofuran, and 5% solution of glacial acetic acid (1 : 1 : 19.4 : 78.6) as the mobile phase. As detector a spectrophotometer set at 363 nm. The number of theoretical plates of the column is not less than 3000, calculated with the reference to the peak of hyperoside.

Reference solution Weigh accurately a quantity of hyperoside CRS, dissolve in dilute ethanol to prepare a solution containing 25 μg per ml.

Test solution To 20 tablets, removed the coats, pulverize to fine powder, and weigh accurately 0.5 g of the powder in a 50 ml volumetric flask, add 40 ml of dilute ethanol, ultrasonicate for 30 minutes (power, 300 W; frequency, 50 kHz), cool, and dilute ethanol to volume, and mix well. Centrifuge for 10 minutes (12000 rpm), or filter by microporous membrane (0.45 μm), and use the supernatant or the successive filtrate as the test solution.

Procedure Inject accurately 10 μl of each of the reference solution and the test solution into the column respectively and measure.

It contains not less than 0.13 mg of hyperoside ($C_{21}H_{20}O_{12}$) per tablet, refered to the extracts of Folium Crataegi.

Action To promote blood circulation to resolve stagnated blood, and remove obstruction from blood vessels.

Indications Chest impediment due to stagnated blood with manifestations of constriction in the chest and stabbing pain in the precardium, palpitation, amnesia, dizziness and tinnitus; angina pectoris in coronary heart disease, hyperlipemia and deficient arterial blood supply with above symptoms.

Usage and dosage 2-3 tablets, 3 times a day.

Storage Preserve in tightly closed containers.

Attached:

Extractum Folium Crataegi
(山楂叶提取物, Shanzhaye Tiquwu)

Pocedure Pulverize Folium Crataegi to powder, comply with the method for percolation described under Liquid Extracts and Extracts (Appendix Ⅰ O). Add 6 times quantity of ethanol, and macerate for 48 hours, percolate and collect the percolation. Recover the ethanol in vacuum and concentrate to an extract with a relative density of 1.04 (60℃), dilute with same volume of water, extract with 1/6 volume of petroleum ether (60-90℃) to eliminate the pigment, and extract water layer again with 0.7 time volume of ethyl acetate. Recovery ethyl acetate in vacuum to dryness as extracts of Folium Crataegi.

Description Pale brown to yellowish-brown powder; odour, characteristic; taste, bitter, hygroscopic.

Identification To 50 mg of the powder, add 5 ml of ethanol, ultrasonicate for 5 minutes, and filter. Use the filtrate as the test solution. Dissolve separately rutin CRS and hyperoside CRS in ethanol to prepare two solutions each containing 0.2 mg per ml as the reference solutions. Carry out the method for thin layer chromatography (Appendix Ⅵ B), using polyamide membrane as the coating substance, and a mixture of ethanol, acetone and water (7 : 5 : 6) as the mobile phase. Apply separately to the plate 1 μl of each of the above two reference solutions and test solution. After developing and removal of the plate, dry in air, and spray with aluminium chloride TS, and blow to dryness, allow to stand for 1 hour, examine under ultraviolet light at 365 nm. The fluorescent spots in the chromatogram obtained with the test solution correspond in position and colour to the spots in the chromatogram obtained with the reference solutions.

Loss on drying Weigh accurately 1 g of the powder to a weighting bottle previously dried to constant weight. Dry for 24 hours in a desiccator with sulfuric acid as desiccant, loses not more than 2.0 per cent.

Assay ***Total flavone*** *Reference solution* Weigh accurately 25 mg of rutin CRS, previously dried in vacuum to constant weight at 120℃, in a 50 ml volumetric flask, add a quantity of ethanol and ultrasonicate (power, 300 W; frequency, 50 kHz) to dissolve, cool and dilute with ethanol to volume, and mix well (containing 0.20 mg of anhydrous rutin per ml).

Standard curve Measure accurately 1 ml, 2 ml, 3 ml, 4 ml, 5 ml, and 6 ml of the reference solution in 25 ml volumetric flask separately, add water for each to 6 ml and 1 ml of 5% solution of sodium nitrite separately, mix well, allow to stand for 6 minutes, then add 1 ml of 10% solution of aluminium nitrate, mix well and allow to stand for 6 minutes, add 10 ml of sodium hydroxide TS and dilute to volume with water. Mix well and allow to stand for 15 minutes. Carry out the method for ultraviolet spectrophotometry and colourimetry (Appendix Ⅴ A), measure the absorbance at 500 nm, taking the reagent solution as a blank, plot the standard curve, using absorbance as ordinate and concentration as abscissa.

Procedure Weigh accurately 0.15 g of the powder in a stopper conical flask, add accurately 25 ml of dilute ethanol, stopper closely, mix well and ultrasonicate for 5 minutes, allow to stand for over 3 hours, and filter. Transfer accurately 2 ml of the successive filtrate to a 25 ml volumetric flask, dilute with water to volume, mix well as the test solution. Transfer accurately 2 ml of the test solution to a 25 ml volumetric flask, dilute with water to volume, mix well as the test solution. Transfer accurately 2 ml of the test solution to a 25 ml volumetric flask, carry out the method as described under the preparation of standard curve, beginning at the

words "add water for each to 6 ml", at the same time, transfer accurately 2 ml of the test solution to a 25 ml volumetric flask, add water to volume, and mix well as the blank. Measure the absorbance, read out the weight of rutin in the test solution from the standard curve, and calculate the content.
It contains not less than 80.0 per cent of total flavone calculated as anhydrous rutin ($C_{27}H_{30}O_{16}$).

Hyperoside Weigh accurately 0.15 g of the powder, determine with the same manner as described under Assay of Yixintong Tablets.
It contains not less than 0.40 per cent of hyperoside ($C_{21}H_{20}O_{12}$) calculated with reference to the dried drug.

Tabellae Folium Ginkgo (银杏叶片, Yinxingye Pian)

Ginkgo Tablets

Ginkgo Tablets are tablets prepared from Extractum Folium ginkgo.

Procedure To 40 g or 80 g of Extractum Folium ginkgo, add a quantity of adjuvants, to make granules and compress into 1000 tablets and coat with sugar of film.

Description Sugar or film coated tablets with pale brownish-yellow to brown core; taste, slightly bitter.

Identification (1) Pulverize a quantity of tablets removed the sugar coats, equivalent to about 48 mg of total flavonoid glycosides, to fine powder, add 15 ml of *n*-butanol. Macerate warmly on a water bath for 15 minutes with frequently shaking, cool and filter, evaporate the filtrate to dryness, dissolve the residue in 2 ml of ethanol as the test solution. Prepare a solution of 0.2 g of Folium Ginkgo reference extract in the same manner as the reference extract solution. Carry out the method for thin layer chromatography (Appendix Ⅵ B), using silica gel G mixed with sodium carboxymethylcellulose containing 4% solution of sodium acetate as the coating substance, and a mixture of ethyl acetate, butanone, methanol and water (5 : 3 : 1 : 1) as the mobile phase. Apply separately 3 μl of each of the above two solutions to the plate. After developing and removal of the plate, dry in air. Spray with 3% aluminium chloride in ethanol. Examine in daylight, the spot in the chromatogram obtained with the test solution corresponds in position and colour to the spot in the chromatogram obtained with the reference extract solution. Examine under ultraviolet light at 365 nm, the fluorescent spot in the chromatogram obtained with the test solution corresponds in position and colour to the spot in the chromatogram obtained with the reference extract solution.
(2) Carry out the method for thin layer chromatography (Appendix Ⅵ B), using silica gel G mixed with sodium carboxymethylcellulose containing 4% solution of sodium acetate as the coating substance, and a mixture of toluene, ethyl acetate, acetone and methanol (10 : 5 : 5 : 0.6) as the mobile phase. Apply separately 15 μl of each of the reference solution and the test solution obtained under Assay ginkgolides to the plate. After developing below 15℃ and removal of the plate, dry in air. Expose to acetic anhydride vapor for 15 minutes and heat at 140-160℃ for 30 minutes to the spot clear. Examine under ultraviolet light at 365 nm. The fluorescent spot in the chromatogram obtained with the test solution corresponds in position and colour to the spot in the chromatogram obtained with the reference drug solution and the reference solution.

Peak area ratio of flavone aglycone Calculate the peak areas from the flavonol aglycone chromatogram, obtained under Assay, the peak area ratio of quercetin to kaempferide is 0.8 to 1.5.

Other requirements Comply with the general requirements for tablets (Appendix Ⅰ D).

Assay ***Total flavonoid glycosides*** Carry out the method for high performance liquid chromatography (Appendix Ⅵ D).

Chromatographic system and system suitability Use Octadecylsilane bonded silica gel as the stationary phase and a mixture of methanol and 0.4% solution of phosphoric acid (50 : 50) as the mobile phase. As detector a spectrophotometer set at 360 nm. The number of theoretical plates of the column is not less than 2500, calculated with the reference to the peak of quercetin.

Reference solution Dissolve quercetin CRS, kaempferol CRS and Isorhamnetin CRS in methanol to prepare a mixed solution respectively containing 30 μg、30 μg、20 μg per ml as the reference solution, or weigh accurately 35 mg of Folium Ginkgo reference extract, marked the content of quercetin, kaempferol and Isorhamnetin, add 25 ml of a mixture of methanol and 25% solution of hydrochloric acid (4 : 1), prepare a solution in the same manner of the test solution, beginning at the words "heat under reflux on a water bath...", as the reference extract solution.

Test solution Weigh accurately 10 tablets, removed sugar coats, pulverize to fine powder. Weigh accurately the powder, equal to 19.2 mg of total flavonoid glycosides, to a stopper conical flask add accurately 20 ml of methanol, stopper tightly, weigh and ultrasonicate (power, 250 W, frequency, 33 kHz) for 20 minutes, allow to cool, weigh again, replenish the lost weight with methanol, mix well and filter. Measure accurately 5 ml of the successive filtrate in a 100 ml conical flask, add 10 ml of methanol, 5 ml of 25% solution of hydrochloride acid, mix well, heat under reflux on a water bath for 30 minutes, cool immediately to room temperature, and transfer to a 50 ml volumetric flask, dilute with methanol to the volume, mix well and filter, use the successive filtrate as the test solution.

Procedure Inject accurately 10 μl of the reference solution or the reference extract solution and 10 μl of the test solution into the column, calculate respectively the content of quercetin, kaempferol and Isorhamnetin and the content of total flavonoid glycosides from the following expression.

The content of total flavonoid glycosides
= (the content of quercetin + the content of kaempferol + the content of isorhamnetin) × 2.51

It contains not less than 9.6 mg of the total flavonoid glycosides for strength (1), or 19.2 mg of the total flavonoid glycosides for strength (2).

Terpene lactones Carry out the method for high performance liquid chromatography (Appendix Ⅵ D).

Chromatographic system and system suitability Use Octadecylsilane bonded silica gel as the stationary phase and a mixture of *n*-propanol, THF and water (1 : 15 : 84) as the mobile phase. With Evaporative Light Scattering Detector. The number of theoretical plates of the column is not less than 2500, calculated with the reference to the peak of bilobalide.

Reference solution Dissolve bilobalide CRS, ginkgolide A, B and C CRS in methanol to prepare a mixed solution respectively containing 1 mg、1 mg、1 mg、0.5 mg per ml as the reference solution, or weigh accurately 0.15 g of Folium Ginkgo reference extract, marked the content of bilobalide, ginkgolide A, B and C, add 10 ml of water, prepare a solution in the same manner of the test solution, beginning at the words "heat for disintegrating on a water bath...", as the reference extract solution.

Test solution Weigh accurately 20 tablets, removed sugar coats, pulverize to fine powder. Weigh accurately the powder in a stopper conical flask, equal to 19.2 mg of ginkgolides, add accurately 50 ml of methanol, stopper tightly and weigh, ultrasonicate (power, 250 W, frequency, 33 kHz) for 20 minutes, allow to cool, weigh again, replenish the lost weight with methanol, mix well and filter. Measure accurately 20 ml of the successive filtrate, recover methanol to dryness, dissolve the reside in 10 ml of water, heat for disintegrating on a water bath, add 2 drops of 2% solution of hydrochloride acid, extract separately with 15 ml of ethyl acetate and three 10-ml quantities of ethyl acetate by shaking, combine the extracts, washed with 20 ml of 5% solution of sodium acetate, separate the layer of sodium acetate, wash with 10 ml of ethyl acetate. Combine the ethyl acetate extracts and washing, wash with two 20-ml quantities of water, combine the water layer, wash with 10 ml of ethyl acetate, combine the ethyl acetate washings, recover to dryness, dissolve the residue in a 5 ml volumetric flask, dilute with methanol to the volume, mix well.

Procedure Inject accurately 5 μl and 20 μl of the reference solution or the reference extract solution and 20 μl of the test solution into the column, calculate separately the content of bilobalide, ginkgolide A, B and C, using a calibration equation of logarithm alteration of two external standards.
It contains not less than 2.4 mg of ginkgolides for strength (1), or 4.8 mg of ginkgolides for strength (2), referred to the amount of bilobalide ($C_{15}H_{18}O_8$), ginkgolide A ($C_{20}H_{24}O_9$), B ($C_{20}H_{24}O_{10}$) and C ($C_{20}H_{24}O_{11}$).

Action To promote blood circulation to resolve stagnated blood and dredge meridians.

Indications Chest impediment, heart pain, stroke, hemiplegia and dysphasia due to blockage of meridians; angina pectoris of the stable type in coronary heart disease and cerebral infarction with above symptoms.

Usage and dosage 2 tablets for strength (1), 1 tablet for strength (2), 3 times a day; or follow doctor's advice.

Strength (1) 9.6 mg of Total flavonoid glycosides, 2.4 mg of Ginkgolides per tablet
(2) 19.2 mg of Total flavonoid glycosides, 4.8 mg of Ginkgolides per tablet

Storage Preserve in tightly closed containers.

Tabellae Menispermi (北豆根片, Beidougen Pian)

Asiatic Moonseed Tablets

Asiatic Moonseed Tablets are the tablets containing the total alkaloids extracted from Rhizoma Menispermi.

Description Sugar coated tablets with blackish-brown core; taste, bitter.

Identification To 1 tablet, remove the sugar coat, triturate to fine powder, add 15 ml of ethyl acetate and 0.5 ml of ammonia TS. Extract by shaking for 10 minutes, filter, and evaporate the filtrate to dryness, dissolve the residue in 1 ml of ethyl acetate as the test solution. To 0.5 of Rhizoma Menispermi reference drug, add 15 ml of ethyl acetate and 0.5 ml of ammonia TS, heat under reflux for 30 minutes, filter and prepare a reference drug solution in the same manner as described in the test solution. Carry out the method for thin layer chromatography (Appendix Ⅵ B), using silica gel G mixed with sodium carboxymethyl cellulose as the coating substance, and a mixture of chloroform, methanol, and ammonia TS (9 : 1 : 1) as the mobile phase. Apply separately to the plate 1-2 μl of each of the above two solutions. After developing and removal of the plate, dry in air, and spray with potassium iodobismuthate TS. The spots in the chromatogram obtained with the test solution correspond in position and colour to the spots in the chromatogram obtained with the reference drug solution.

Other requirements Comply with the general requirements for tablets (Appendix Ⅰ D).

Assay Weigh accurately 20 tablets and triturate to fine powder. Weigh accurately a quantity (equivalent to about 80 mg of total alkaloids) in a stopper conical flask. Add 25 ml of ethyl acetate, shake for 30 minutes and filter. Wash the container and the residue with 10 ml of ethyl acetate in 3 portions. Combine the washings and the filtrate, evaporate to dryness on a water bath. Dissolve the residue in 10 ml of dehydrated ethanol, add accurately 25 ml of sulfuric acid (0.01 mol/L) VS and 2 drops of methyl red IS, titrate with sodium hydroxide (0.02 mol/L) VS. Each ml of sulfuric acid (0.01 mol/L) VS is equivalent to 6.248 mg of dauricine ($C_{38}H_{44}N_2O_6$).
It contains not less than 90.0 per cent and not more than 110.0 per cent of the labelled amount of total alkaloids, calculated as dauricine ($C_{38}H_{44}N_2O_6$).

Action To clear *heat* and *toxicity*, reduce swelling and ease the throat.

Indications Swollen painful throat due to fire accumulation in the interior; acute pharyngitis or tonsillitis with above symptoms.

Usage and dosage 60 mg, 3 times a day.

Strength (1) 15 mg per tablet (2) 30 mg per tablet

Storage Preserve in tightly closed containers.

Tabellae Physochlainae (华山参片, Huashanshen Pian)

Funneled Physochlaina Tablets

Funneled Physochlaina Tablets are the tablets prepared from Radix Physochlainae.

Procedure Comply with the method for percolation described under liquid extracts and extracts (Appendix Ⅰ O), using ethanol containing 0.1% of hydrochloric acid as the solvent, macerate the coarse powder of Radix Physochlainae for 24 hours, then percolate until the colour of percolated solution is pale, concentrate the solution in vacuum to a thick extract, determine the content of alkaloids. To the extract add a quantity of excipients, make granules, compress into tablets and coat with sugar.

Description Sugar coated tablets, with brown core; taste, bitter.

Identification Pulverize 20 tablets, removed sugar coats, moisten with 2 ml of the mixture of concentrated ammonia TS and ethanol (1 : 1) solution, add 20 ml of chloroform, heat under reflux for 1 hour, filter and evaporate the filtrate to dryness, dissolve the residue with 0.5 ml of chloroform as the test solution. Dissolve atropine sulfate CRS, scopolamine hydrobromide CRS, anisodamine hydrobromide CRS and scopoletin CRS in ethanol separately to prepare solutions containing 1 mg of each per ml as the reference solutions. Carry out the method for thin layer chromatography (Appendix Ⅵ B), using silica gel G as the coating substance

and a mixture of ethyl acetate, methanol and concetrated ammonia TS (17 : 2 : 1) as the mobile phase. Apply separately to the plate 5-6 μl of each of the five solutions. After developing and removal of the plate, dry in air, examine under ultraviolet light at 365 nm, the fluorescent spot due to scopoletin in the chromatogram obtained with the test solution corresponds in position and colour to the spot in the chromatogram obtained with the reference solution. And then spray successively with potassium iodobismuthate TS and ethanolic sodium nitrite TS, examine in sunlight, the four spots in the chromatogram obtained with the test solution correspond in position and colour to the spots in the chromatogram obtained with the reference solutions.

Other requirements Comply with the general requirements for tablets (Appendix Ⅰ D).

Assay *Reference solution* Weigh accurately a quantity of atropin sulfate CRS, dried to constant weight at 120℃, dissolve in water to prepare a solution containing 7 μg per ml of hyoscyamine as the reference solution.

Test solution Weigh accurately 40 tablets, removed sugar coats, pulverize to fine powder. Weigh accurately a quantity of the powder (equivalent to about 12 tablets) in a stopper conical flask, add accurately 25 ml of citric acid-sodium dihydrogen phosphate BS (pH 4.0), shake for 5 minutes, and allow to stand for overnight. Filter with dry filter paper, discard the intial filtrate and use the successive filtrate as the test solution.

Procedure Measure accurately 2 ml of each of the reference solution and the test solution in separators, add accurately 10 ml of citric acid-sodium dihydrogen phosphate BS (pH4.0) and 2 ml of 0.04% bromocresol green solution prepared with above BS respectively, and shake well. Extract with 10 ml of chloroform for 5 minutes by shaking, separate the chloroform layer and filter with filter paper, moisten with chloroform, in 25 ml volumetric flask. Continue to extract the aqueous layer with three 5-ml quantities of chloroform and filter to the flask. Wash the filter paper with chloroform and filter to the flask, dilute with chloroform to the volume. Carry out the method for ultraviolet spectrophotometry and colourimetry (Appendix Ⅴ A), measure the absorbance at 415 nm and calculate.
It contains not less than 80 per cent and not more than 120 per cent of the labelled amount of alkaloids, calculated as hyoscyamine ($C_{17}H_{23}NO_3$).

Action To warm the lung and relieve dyspnea, and check coughing and remove phlegm.

Indications Dyspnea and coughing with expectoration of thin phlegm due to invasion of the lung by cold, phlegm or morbid fluid; chronic tracheitis and asthmatic tracheitis with above symptoms.

Usage and dosage Usual dose: 1-2 tablets, 3-6 tablets a day. Maximum dose: 4 tablets, three times a day.

Precaution Contraindicated for glaucoma patients; be cautious about pregnant women and prostatic hyperplasia patients

Strength 0.12 mg per tablet

Storage Preserve in tightly closed containers.

Tabellae Puerariae (愈风宁心片, Yufeng Ningxin Pian)

Yufeng Ningxin Tablets

Yufeng Ningxin Tablets are prepared from the extract of Radix Puerariae.

Procedure Pulverize 150 g of Radix Puerariae to fine powder. Heat 850 g of Radix Puerariae with 80%-90% ethanol under reflux for 3 times, 4 hours for the first time and 3 hours for the second and third time respectively, filter, combine the filtrates, recover ethanol and concentrate in vacuum to a thick extract with a relative density of 1.40 (50℃). Mix the extract with the above powder thoroughly, dry, pulverize, make granules, dry, compress into 1000 tablets and coat with sugar or film.

Description Sugar or film coated tablets with brown core; taste, slightly bitter and sweet.

Identification Pulverize 2 tablets, removed the coats, to fine powder, add 20 ml of ethyl acetate, ultrasonicate for 20 minutes, and filter. Evaporate the filtrate to dryness, and dissolve the residue in 1 ml of methanol as the test solution. Dissolve puerarin CRS in methanol to produce a solution containing 1 mg per ml as the reference solution. Carry out the method for thin layer chromatography (Appendix Ⅵ B), using silica gel G as the coating substance and a mixture of chloroform, methanol and water (7 : 2.5 : 0.25) as the mobile phase. Apply separately to the plate 2 μl of each of the two solutions. After developing and removal of the plate, dry in air, and examine under ultraviolet light at 365 nm. The fluorescent spot in the chromatogram obtained with the test solution corresponds in position and colour to the spot in the chromatogram obtained with the reference solution.

Other requirements Comply with the general requirements for tablets (Appendix Ⅰ D).

Assay Carry out the method for high performance liquid chromatography (Appendix Ⅵ D).

Chromatographic system and system suitability Use octadecylsilane bonded silica gel as the stationary phase and a mixture of methanol and water (25 : 75) as the mobile phase. As detector a spectrophotometer set at 250 nm. The number of theoretical plates for the column is not less than 2000, calculated with the reference to the peak of puerarin.

Reference solution Dissolve a quantity of puerarin CRS in 30% ethanol to prepare a solution containing 80 μg per ml.

Test solution Weigh accurately 10 tablets, removed the coats, pulverize to fine powder. Place 50 mg of the fine powder, accurately weighed, to a stopper conical flask, add accurately 50 ml of 30% ethanol, stopper tightly, and weigh. Ultrasonicate for 20 minutes (power, 250 W; frequency, 33 kHz) and stand to cool. Weigh again and replenish the lost weight with 30% ethanol, mix well, and filter. Use the successive filtrate as the test solution.

Procedure Accurately inject 10 μl of each of the reference solution and the test solution, respectively, into the column, calculate the content.
It contains not less than 13.0 mg of puerarin ($C_{21}H_{20}O_9$) per tablet, refered to Radix Puerariae.

Action To relieve spasm to kill pain and promote blood circulation of the brain and coronary artery.

Indications Dizziness, headache, painful neck, angina pectoris in coronary heart disease, nervous headache and sudden deafness at the initial stage.

Usage and dosage 5 tablets, 3 times a day.

Storage Preserve in tightly closed containers.

Tabellae Rhei Preparata (新清宁片, Xinqingning Pian)

Xinqingning Tablets

Xinqingning Tablets are prepared from Radix et Rhizoma Rhei (prepared).

Procedure Pulverize Radix et Rhizoma Rhei (prepared) to fine powder, add a quantity of ethanol, make granules, dry, add a quantity of starch and magnesium stearate, mix thoroughly, compress into 1000 tablets and coat with sugar.

Description Sugar coated tablets with brownish-black core; taste, slightly bitter and astringent.

Identification (1) Pulverize the tablets, removed sugar coats, to fine powder, microsublimate a small quantity of the powder, rhombus or feathery crystal is shown.
(2) Macerate 0.1 g of the tablets, removed sugar coats and pulverized, in 20 ml of methanol for 1 hour, filter and evaporate 5 ml of the filtrate to dryness. Dissolve the residue in 10 ml of water, add 1 ml of hydrochloric acid and heat on a water bath for 30 minutes. Allow to cool immediately, extract with two 20-ml quantities of ether by shaking and evaporate the combined extracts to dryness. Dissolve the residue in 1 ml of chloroform as the test solution. Prepare a solution of 0.1 g of Radix et Rhizoma Rhei reference drug as the reference drug solution in the same manner. Carry out the method for thin layer chromatography (Appendix Ⅵ B), using silica gel H containing sodium carboxymethylcellulose as the coating substance and the upper layer of petroleum ether (30-60℃), ethyl formate and formic acid (15 : 5 : 1) as the mobile phase. Apply separately to the plate 4 μl of the two solutions. After developing and removal of the plate, dry in air, and examine under ultraviolet light at 365 nm. The main five orange fluorescent spots in the chromatogram obtained with the test solution correspond in position and colour to the spots in the chromatogram obtained with the reference drug solution. The spots turn to red on exposure to ammonia vapour.

Other requirements Comply with the general requirements for tablets (Appendix Ⅰ D).

Assay Carry out the method for high performance liquid chromatography (Appendix Ⅵ D).

Chromatographic system and system suitability Use octadecylsilane bonded silica gel as the stationary phase, and a mixture of acetonitrile, methanol and 0.1% solution of phosphoric acid (35 : 37 : 28) as the mobile phase. As detector a spectrophotometer set at 254 nm. The number of theoretical plates of the column is not less than 3000, calculated with the reference to the peak of emodin.

Reference solution Weigh accurately a quantity of emodin CRS and chrysophanol CRS, dissolve in methanol to prepare two solutions respectively containing 20 μg of emodin per ml and 40 μg of chrysophanol per ml.

Test solution To 20 tablets, removed the coats, pulverized to fine powder, and weigh accurately 0.1 g of the powder in a stopper conical flask, add accurately 50 ml of methanol, closely stopper and weigh. Heat under reflux on a water bath for 1.5 hour, cool, weigh again, replenish the lost weight with methanol, mix well and filter. Measure accurately 25 ml of the successive filtrate, evaporate the filtrate to dryness, dissolve the residue in 27 ml of hydrochloric acid solution (2→27), add 20 ml of chloroform, heat under reflux for 30 minutes, cool immediately, transfer to a separating funnel, wash the container with a quantity of chloroform, combine the washings to the above separating funnel, separate the chloroform layer, extract the water solution with one 15-ml and two 10-ml quantities of chloroform, combine the chloroform extracts, add a quantity of anhydrous sodium sulphate. Recover the chloroform extracts to dryness, dissolve the residue in 2 ml of ethyl acetate, and transfer to a 10 ml volumetric flask, add methanol to volume, mix well, and filter. Discard the initial filtrate, and use the successive filtrate as the test solution.

Procedure Inject accurately 10 μl of each of the reference solutions and the test solution into the column respectively and calculate.
It contains not less than 1.8 mg of the summation of emodin ($C_{15}H_{10}O_5$) and chrysophanol ($C_{15}H_{10}O_4$) per tablet, referred to Radix et Rhizoma Rhei (prepared).

Action To clear *heat* and *toxicity*, and purge *fire* and relax bowels.

Indications Swollen throat, toothache, bloodshot eyes, constipation, dysentery, or fever due to excessive *heat* accumulated in the interior; infectious inflammation with above symptoms.

Usage and dosage 3-5 tablets, 3 times a day. increase the dosage if necessary; reduce the dosage appropriately or follow doctor's advice for preschool children. For constipation, 5 tablets, to be taken before sleeping.

Storage Preserve in tightly closed containers.

Tabellae Salviae Miltiorrhizae (丹参片, Danshen Pian)

Danshen Tablets

Danshen Tablets are tablets prepared from Radix Salviae Miltiorrhizae.

Procedure Heat 1000 g of Radix Salviae Miltiorrhizae under reflux with 90% ethanol for 1.5 hours, filter, recover ethanol and concentrate the filtrate to a thick extract. Decoct the residue with water for 1 hour, filter, combine the filter and the above thick extract, concentrate to a quantity in vacuum. Add a quantity of adjurant, mix thoroughly and dry, make granules, compress into 1000 tablets, coat with sugar or film.

Description Film coated or sugar coated tablets with brown to dark brown core; taste, slightly bitter and astringent.

Identification Triturate 10 tablets, removed the coats, to fine powder, add 20 ml of ether, shake, allow to stand for 1 hour, and filter. Evaporate the filtrate to dryness, and dissolve the residue in 1 ml of ethyl acetate as the test solution. Prepare 1 g of Radix Salviae Miltiorrhizae reference drug in the same manner as reference drug solution. Dissolve a quantity of tanshinone Ⅱ A CRS in ethyl acetate to prepare a solution containing 2 mg per ml as the reference solution. Carry out the method for thin layer chromatography (Appendix Ⅵ B), using silica gel G as the coating substance, and a mixture of cyclohexane and ethyl acetate (6 : 1) as the mobile phase. Apply separately to the plate 5 μl of above three solutions. After developing and removal of the plate, dry in air. The three main spots in the chromatogram obtained with the test solution correspond in position and colour to the spots in the chromatogram obtained with the reference drug solution at least. The dark red spot in the chromatogram obtained with the test solution

corresponds in position and colour to the spot in the chromatogram obtained with the reference solution.

Other requirements Comply with the general requirements for tablets (Appendix Ⅰ D).

Assay Carry out the method for high performance liquid chromatography (Appendix Ⅵ D).

Chromatographic system and system suitability Use octadecylsilane bonded silica gel as the stationary phase, and a mixture of methanol, acetonitrile, formic acid, and water (30 : 10 : 1 : 59) as the mobile phase. As detector a spectrophotometer set at 286 nm. The number of theoretical plates of the column is not less than 2000, calculated with the reference to the peak of salvianolic acid B.

Reference solution Weigh accurately a quantity of salvianolic acid B CRS, dissolve in water and mix well, to prepare a solution containing 10 μg per ml.

Test solution Triturate 10 tablets, removed the sugar coats, to fine powder, weigh accurately 0.2 g of the powder, to a 50 ml volumetric flask, add a quantity of water, and ultrasonicate for 20 minutes (power, 250 W; frequency, 33 kHz), cool, add water to volume, mix well and filter. Measure accurately 1 ml of the successive filtrate to a 25 ml volumetric flask, add water to volume, mix well and filter. Discard the initial filtrate, and use the successive filtrate as the test solution.

Procedure Inject accurately 20 μl of each of the reference solution and the test solution into the column respectively and calculate.

It contains not less than 11 mg of salvianolic acid B ($C_{36}H_{30}O_{16}$) per tablet referred to Radix Salviae Miltiorrhizae.

Action To promote blood circulation to resolve stagnant blood.

Indications Chest impediment due to stagnated blood with manifestations of fixed chest pain and dark purple tongue; angina pectoris in coronary heart disease with above symptoms.

Usage and dosage 3-4 tablets, 3 times a day.

Storage Preserve in tightly closed containers.

Tabellae Sarcandra glabra (肿节风片, Zhongjiefeng Pian)

Glabrous Sarcandra Tablets

Glabrous Sarcandra Tablets are tablets prepared from Herba Sarcandrae.

Procedure Pulverize 3125 g of Herba Sarcandrae, decoct with water for 3 times, 1 hour each time, filter, combine the filtrate, concentrate the filtrate to a thick extract, and dry. Add a quantity of excipients, make granules, and dry. Compress into 1000 tablets and coat with sugar.

Prescription Sugar coated tablets with brown to dark brown core; taste, bitter, slightly astringent.

Identification (1) Pulverize 2 tablets, removed the sugar coats, to fine powder. Transfer 0.1 g of the powder to a test tube, add a small amount of zinc powder and two drops of 0.5% solution of ammonia chloride, heat gently to dryness, and put a filter paper, macerated with a solution of 5% dimethylaminobenzaldhyde and 20% trichloroacetic acid in benzene, on the test tube heat gently for a minute, a pink to purple spot appears on the paper.

(2) Pulverize 10 tablets to fine powder, add 20 ml of chloroform, ultrasonicate for 30 minutes, filter, evaporate the filtrate to dryness. Dissolve the residue in 1ml of methanol as the test solution. To 2g of Herba Sarcandrae reference drug, add 50 ml of water, ultrasonicate for 30 minutes, and filter. Extract the filtrate with two 25-ml quantities of ethyl acetate by shaking, combine the extracts, and evaporate to dryness. Dissolve the residue in 1 ml of methanol as the reference drug solution. Dissolve isofraxidin CRS in methanol to prepare a solution containing 0.5 mg per ml as the reference solution. Carry out the method for thin layer chromatography (Appendix Ⅵ B), using silica gel containing sodium carboxymethylcellulose as the coating substance and a mixture of toluene, ethyl acetate and formic acid (9 : 4 : 1) as the mobile phase. Apply separately the plate 4 μl of each of the three solutions, after developing and removal of the plate, dry in air. Examine under ultraviolet light at 365 nm. The fluorescent spots in the chromatogram obtained with the test solution correspond in position and colour to the spots in the chromatogram obtained with the reference solution and the reference drug solution. Expose to ammonia vapour for 10 minutes, the colour of the spot corresponding to the reference becomes yellowish-green.

Other requirements Comply with the general requirements for tablets (Appendix Ⅰ D).

Extractives Pulverize 20 tablets removed the coats, weighed accurately, to fine powder, weigh accurately 2 g, carry out the method for determination of ethanol-soluble extractives (Appendix Ⅹ A, hot extraction method), use methanol as the solvent. It contains not less than 80 mg per tablet.

Assay Carry out the method for high performance liquid chromatography (Appendix Ⅵ D).

Chromatographic system and system suitability Use octadecylsilane boned silica gel as the stationary phase and a mixture of acetonitrile and 0.1% solution of phosphoric acid (20 : 80) as the mobile phase. As detector a spectrophotometer set at 344 nm. The number of theoretical plates of the column is not less than 2000, calculated with reference to the peak of isofraxidin.

Reference solution Dissolve a quantity of isofraxidin CRS in methanol to prepare a solution containing 4 μg per ml as the reference solution.

Test solution Pulverize 10 tablets removed the coats, weighed accurately, to fine powder, weigh accurately 50 mg in a stopper conical flask, add accurately 25 ml of methanol, tightly stopper, weigh and ultrasonicate (power, 300 W; frequency, 25 kHz) for 40 minutes. Allow to cool, weigh again, replenish the lost of the weight with methanol, mix well and filter, use the successive filtrate as the test solution.

Procedure Inject accurately 20 μl of each of the reference solution and the test solution, separately, into the column, and calculate the content.

It contains not less than 0.50 mg of isofraxidin ($C_{11}H_{10}O_5$) per tablet.

Action To clear *heat* and relieve *toxicity*, and reduce swelling and dissipate nodulation.

Indications Pneumonia, appendicitis and phlegmon due to abundant *heat*; also used for an adjuvant in treatment of cancer.

Usage and dosage 3 tablets, 3 times a day.

Storage Preserve in tightly closed containers.

Tabellae Swertiae Mileensis (青叶胆片, Qingyedan Pian)

Mile Swertia Tablets

Mile Swertia Tablets are the tablets prepared from Herba Swertiae Mileensis.

Procedure Pulverize 70 g of Herba Swertiae Mileensis to fine powder, and pulverize 1500 g of Herba Swertiae Mileensis to coarse powder, decoct the coarse powder with water for 2 times, 4 hours for the first time and 3 hours for the second time. Filter, combine the filtrate, concentrate the filtrate to a thick extract in vacuum. Add 70 g of the fine powder of Herba Swertiae Mileensis and a quantity of excipients, mix thoroughly and dry, make granules then compress into 1000 tablets and coat with sugar.

Description Sugar coated tablets with brownish-green core; taste, bitter.

Identification (1) Heat under reflux 4 tablets, removed the sugar coats and pulverized to fine powder, in 20 ml of methanol for 30 minutes and filter. Concentrate the filtrate to about 10 ml as the test solution. Dissolve oleanolic acid CRS in methanol to prepare a solution containing 2 mg per ml as the reference solution. Carry out the method for thin layer chromatography (Appendix Ⅵ B), using silica gel G as the coating substances and a mixture of toluene, ethyl acetate and glacial acetic acid (12 : 4 : 0.5) as the mobile phase. Apply separately to the plate 2 μl of each of the two solutions. After developing and removal of the plate, dry in air. Spray with 10% sulfuric acid in ethanol, heat at 105℃ for 5 minutes. The purplish-red spot in the chromatogram obtained with the test solution corresponds in position and colour to the spot in the chromatogram obtained with the reference solution.

(2) Apply 1 ml of the test solution obtained under the test for Identification (1) to a column of neutral aluminium oxide (1 g, 100-120 mesh, 5mm in inner diameter), elute with 2 ml of methanol, collect the eluate, evaporate to dryness and dissolve the residue in 2 ml of methanol as the test solution. Dissolve swertiamain CRS in methanol to prepare a solution containing 8 mg per ml as the reference solution. Carry out the method for thin layer chromatography (Appendix Ⅵ B), using silica gel GF_{254} as the coating substances and a mixture of chloroform-methanol (17 : 3) as the mobile phase. Apply separately to the plate 1-2 μl of each of the two solutions. After developing and removal of the plate, dry in air, examine under ultraviolet light at 254 nm. The spot in the chromatogram obtained with the test solution corresponds in position and colour to the spot in the chromatogram obtained with the reference solution.

Other requirements Comply with the general requirements for tablets (Appendix Ⅰ D).

Assay Carry out the method for high performance liquid chromatography (Appendix Ⅵ D).

Chromatographic system and system suitability Use octadecylsilane bonded silica gel as the stationary phase, and a mixture of methanol and 0.3% solution of formic acid (25 : 75) as the mobile phase. As detector a spectrophotometer set at 237 nm. The number of theoretical plates of the column is not less than 2000, calculated with the reference to the peak of swertiamain.

Reference solution Dissolve a quantity of swertiamain CRS, weighed accurately, in methanol to prepare a solution containing 0.5 mg per ml.

Test solution To 30 tablets, removed the coats, pulverize to fine powder, and weigh accurately of the powder (about 12 tablets) in a 100 ml volumetric flask, add 80 ml of methanol, macerate for 20 minutes, ultrasonicate for 15 minutes (power, 250 W; frequency, 33 kHz), cool, add methanol to volume, mix well and filter. Discard the initial filtrate, and use the successive filtrate as the test solution.

Procedure Inject accurately 10 μl of each of the reference solution and the test solution into the column respectively and calculate.

It contains not less than 4.0 mg of swertiamain ($C_{16}H_{22}O_{10}$) per tablet.

Action To clear the liver and promote bile flow, and clear *heat* and drain *dampness*.

Indications Jaundice with brown urine, or stranguria due to *heat* with unsmooth and painful urination.

Usage and dosage 4-5 tablets, 4 times a day.

Storage Preserve in tightly closed containers.

Tabellae Tripterygii Hypoglauci (昆明山海棠片, Kunming Shanhaitang Pian)

Kunming Shanhaitang Tablets

Kunming Shanhaitang tablets are prepared from Radix Tripterygii Hypoglauci.

Procedure Cut Radix Tripterygii Hypoglauci to pieces, macerate with 50% ethanol for 1 hour, heat under reflux for three times, 1 hour for each, filter, combine the filtrate, recover ethanol in vacuum, concentrate to a thick extract, then dry in vacuum to dry extract. Pulverize 250 g of the dry extract, add a quantity of excipient, mix thoroughly, make granules, compress into 1000 tablets and coat with sugar.

Description Sugar coated tablets with brown core, taste, slightly bitter and astringent.

Identification Pulverize 2 tablets, removed sugar coats, to fine powder, add 4 ml of ammonia TS and extract with 20 ml of ether by shaking. Separate the ether layer, extract with 5 ml of 1 mol/L hydrochloric acid solution by shaking. Separate the water layer and filter, divide the filtrate into two test tubes. To one tube add several drops of mercuric potassium iodide TS; a white precipitate is produced. To the other tube add several drops of trinitrophenol TS; a yellow precipitate is produced.

Other requirements Comply with the general requirements for tablets (Appendix Ⅰ D).

Assay Weigh accurately 60 tablets, removed sugar coats, and pulverize to fine powder. Weigh accurately a quantity (equivalent to about 25 tablets) in a 200 ml conical flask, add a quantity of kieselguhr (0.2 g for each gram of the sample), mix thoroughly. Add 70 ml of ethanol, heat under reflux on a water bath for 40 minutes, allow to cool, and filter. To the residue add 50 ml of ethanol and continue to heat under reflux for 30 minutes, cool and filter. Combine the filtrate and evaporate to dryness on a water bath. Dissolve the residue in 30 ml of hydrochloric acid (1→100) with stirring on a water bath, cool and filtre. Extract with a solution of hydrochloric acid (1→200) for three times (20, 15, 15 ml) in the same manner. Combine the filtrates to a separator, add ammonia TS to adjust to alkaline,

extract with successive quantities of 40, 30, 25 and 20 ml of ether by shaking, combine ether extracts, wash with two 10-ml quantities of water by shaking, and filter the ether solution through the filter paper. Transfer the ether solution to an evaporating dish previously dried to constant weight at 100℃, evaporate ether on a water bath at a lower temperature, add a small quantity of dehydrated ethanol to the residue, and continue to evaporate to dryness. Dry to constant weight at 100℃, weigh and calculate.
It contains not less than 1.0 mg of total alkaloids per tablet.

Action To expel *wind* and *dampness*, relax muscles and tendons and activate meridians, and clear *heat* and relieve *toxicity*.

Indications Rheumatoid arthritis and lupus erythematosus.

Usage and dosage 2 tablets, 3 times a day.

Precaution Be cautious about patients with renal insufficiency.

Storage Preserve in tightly closed containers.

Tianma Shouwu Pian
(天麻首乌片)

Tianma Shouwu Tablets

Ingredients Rhizoma Gastrodiae; Radix Angelicae Dahuricae; Radix Polygoni Multiflori; Radix Rehmanniae Praeparata; Radix et Rhizoma Salviae Miltiorrhizae; Rhizoma Chuanxiong; Radix Angelicae Sinensis; Fructus Tribuli (stir-baked); Folium Mori; Herba Ecliptae; Fructus Ligustri Lucidi; Radix Paeoniae Alba; Rhizoma Polygonati; Radix et Rhizoma Glycyrrhizae.

Procedure Pulverize Rhizoma Gastrodiae, Rhizoma Chuanxiong and Radix Polygoni Multiflori to fine powder respectively, sift, and mix thoroughly. Extract volatile oil from Radix Angelicae Dahuricae and Radix Angelicae Sinensis respectively by distillation. Decoct the drug residue together with other 9 ingredients with water twice, each for 2 hours, combine the decoctions, filter, concentrate to a thin extract with a relative density of 1.28-1.30 (measured in warm condition). Add the above fine powder, mix thoroughly, dry, pulverize, sift and make granules. Spray the volatile oils of Radix Angelicae Dahuricae and Radix Angelicae Sinensis, and close tightly. Compress into 1000 tablets, and coat with sugar or film.

Description Sugar or film coated tablets with brown core; odour, fragrant; taste, slightly bitter.

Identification (1) Triturate 5 tablets, removed the coats, to fine powder, add 25 ml of ether, heat under reflux for 1 hour, filter, evaporate the filtrate to dryness, and dissolve the residue in 1 ml of methanol as the test solution. Prepare a solution of 0.2 g of Radix Polygoni Multiflori reference drug in the same manner as the reference drug solution. Carry out the method for thin layer chromatography (Appendix Ⅵ B), using silica gel G as the coating substance and a mixture of benzene and ethanol (2 : 1) as the mobile phase, develop about 3.5 cm, and remove the plate, dry in air, develop again with a mixture of benzene and ethanol (4 : 1) as the mobile phase, about 7 cm. Apply separately to the plate 5 μl of the test solution and the reference drug solution. After developing and removal of the plate, dry in air, and spray with phosphomolybdic acid in sulfuric acid (Dissolve 2 g of phosphomolybdic acid in 20 ml of water, add gently 30 ml of sulfuric acid, shake well.) and heat to the spots clear. The spots in the chromatogram obtained with the test solution correspond in position and colour to the spots in the chromatogram obtained with the reference drug solution.
(2) Triturate 20 tablets, removed the coats, to fine powder, add 20 ml of ether, macerater over night, filter, evaporate the filtrate to dryness, and dissolve the residue in 0.5 ml of ethanol as the test solution. Prepare a solution of 0.2 g of Rhizoma Chuanxiong reference drug in the same manner as the reference drug solution. Carry out the method for thin layer chromatography (Appendix Ⅵ B), using silica gel G as the coating substance, and a mixture of cyclohexane and ethyl acetate (9 : 1) as the mobile phase. Apply separately to the plate 10 μl of the test solution and the 2 μl of the reference drug solution. After developing and removal of the plate, dry in air. Examine under ultraviolet light at 365 nm. The fluorescent spots in the chromatogram obtained with the test solution correspond in position and colour to the spots in the chromatogram obtained with the reference drug solution.
(3) Triturate 100 tablets, removed the coats, to fine powder, add 20 ml of methanol, ultrasonicate for 30 minutes, filter, evaporate the filtrate to dryness, and dissolve the residue in 1 ml of methanol as the test solution. To 1 g of Folium Mori reference drug, add 50 ml of water, heat boiling for 30 minutes, filter, evaporate the filtrate to dryness, and dissolve the residue in 1 ml of methanol as the reference drug solution. Carry out the method for thin layer chromatography (Appendix Ⅵ B), using silica gel G as the coating substance, and a mixture of toluene, ethyl acetate, and formic acid (5 : 2 : 1) as the mobile phase. Apply separately to the plate 20 μl of the test solution and the 5 μl of the reference drug solution. After developing and removal of the plate, dry in air. Examine under ultraviolet light at 365 nm. The fluorescent spots in the chromatogram obtained with the test solution correspond in position and colour to the spots in the chromatogram obtained with the reference drug solution.

Other requirements Comply with the general requirements for tablets (Appendix Ⅰ D).

Assay Operate protected from light. Carry out the method for high performance liquid chromatography (Appendix Ⅵ D).

Chromatographic system and system suitability Use octadecylsilane bonded silica gel as the stationary phase, and a mixture of acetonitrile and water (22 : 78) as the mobile phase. As detector a spectrophotometer set at 320 nm. The number of theoretical plates of the column is not less than 2000, calculated with the reference to the peak of 2,3,5,4'-tetrahedroxystilbene-2-O-β-D-glucoside.

Reference solution Weigh accurately a quantity of 2,3,5,4'-tetrahedroxystilbene-2-O-β-D-glucoside CRS, dissolve in methanol to prepare a solution containing 40 μg per ml.

Test solution To 10 tablets, removed the sugar coats, pulverize to fine powder, and weigh accurately some of the powder (equivalent to about 2 tablets) in a stopper conical flask, add accurately 25 ml of methanol, closely stopper and weigh. Heat under reflux for 30 minutes, cool, weigh again, replenish the lost weight with methanol, mix well, filter. Discard the initial filtrate, and use the successive filtrate as the test solution.

Procedure Inject accurately 5-10 μl of each of the reference solution and the test solution into the column respectively and calculate.
It contains not less than 0.20 mg of 2,3,5,4'-tetrahedroxystilbene-2-O-β-D-glucoside ($C_{20}H_{22}O_9$) per tablet.

Action To nourish *yin* to reinforce the kidney, and nourish blood to extinguish *wind*.

Indications Dizziness, headache, tinnitus, bitter taste in the mouth, dry throat, aching and weakness of the lower back and knees, trichomadesis and gray hair due to *yin* deficiency in the liver and kidney; cerebral arteriosclerosis, hypertension at the initial stage, hyperemic headache and seborrheic trichomadesis with above symptoms.

Usage and dosage 6 tablets, 3 times a day.

Storage Preserve in well closed containers, and stored in dry place.

Tianma Wan
(天麻丸)

Tianma Pills

Ingredients Rhizoma Gastrodiae 60 g; Rhizoma et Radix Notopterygii 100 g; Radix Angelicae Pubescentis 50 g; Cortex Eucommiae (stir-baked with salt) 70 g; Radix Achyranthis Bidentatae 60 g; Rhizoma Dioscoreae Hypoglaucae 60 g; Radix Aconiti Lateralis (processed) 10 g; Radix Angelicae Sinensis 100 g; Radix Rehmanniae 160 g; Radix Scrophulariae 60 g.

Procedure Pulverize the above ten ingredients to fine powder, sift and mix thoroughly. To each 100 g of the powder add 40-50 g of refined honey and a quantity of water to make water-honeyed pills and dry; or add 90-110 g of refined honey to make big honeyed pills.

Description Blackish-brown water-honeyed pills or black big honeyed pills; odour, slightly aromatic; taste, slightly sweet, slightly bitter and numb.

Identification (1) Microscopical: Needles of calcium oxalate in bundles or scattered, 25-48 μm long. Stone cells yellowish-brown or colourless, subrectangular, subrounded or irregular, up to about 94 μm in diameter, with obvious striations. Rubber threads strip-shaped or twisting into masses, granular on surface. Parenchyma greyish-brown to blackish-brown, cells mostly shrunken, and each containing a brown nucleus-like mass. Vittae about 100 μm in diameter, containing brownish-yellow secretion. Parenchymatous cells containing sand crystals of calcium oxalate. Lignified parenchymatous cells pale yellow or yellow, grouped or singly scattered, long ellipsoidal, spindle-shaped or long fusiform, acute or branched at one side, walls slightly thickened with transversal slit-shaped pits and distinct pit-canals.

(2) Pulverize 5 g of the water-honeyed pills or 8 g of big honeyed pills, add 40 ml of *n*-butanol saturated with water, ultrasonicate for 30 minutes, and filter. Evaporate the filtrate to dryness, dissolve the residue in 2 ml of water, and apply to an prepared column (1cm in inner diameter and 16 cm length) packed with macroporous absorption resin D101. Elute with 25 ml of 10% ethanol, collect the eluate and evaporate to dryness, and dissolve the residue in 0.5 ml of methanol as the test solution. Dissolve gastrodin CRS in methanol to prepare a solution containing 1 mg per ml as the reference solution. Carry out the method for thin layer chromatography (Appendix Ⅵ B), using silica gel G containing sodium carboxymethylcellulose as the coating substance and a mixture of chloroform, ethyl acetate, methanol and formic acid (8 : 1 : 3 : 0.1) as the mobile phase. Apply separately to the plate 1-2 μl of the test solution and 3 μl of the reference solution. After developing and removal of the plate, dry in air. Spray with 10% phosphomolybdic acid in ethanol and heat at 110℃ to the spots clear. The spot in the chromatogram obtained with the test solution corresponds in position and colour to the spot in the chromatogram obtained with the reference solution.

(3) Grind well 5 g of the water-honeyed pills or big honey pills, pulverized or cut into pieces, with 4 g of kieselguhr, heat under reflux with 40 ml of petroleum ether (60-90℃) for 20 minutes, allow to cool, filter, evaporate the filtrate to dryness and dissolve the residue in 1 ml of ethyl acetate as the test solution. Prepare a solution of 0.5 g of Rhizoma et Radix Notopterygii reference drug as the reference drug solution in the same manner. Carry out the method for thin layer chromatography (Appendix Ⅵ B), using silica gel G as the coating substances and a mixture of *n*-hexane, benzene and ethyl acetate (2 : 2 : 1) as the mobile phase. Apply separately to the plate 10 μl of the test solution and 3-5 μl of the reference drug solution. After developing and removal of the plate, dry in air. Spray with 1% vanillin in sulfuric acid, heat at 105℃ for 5 minutes. The spot in the chromatogram obtained with the test solution corresponds in position and colour to the spot in the chromatogram obtained with the reference solution.

(4) Heat under reflux 0.2 g of Radix Angelicae Sinensis reference drug in 10 ml of ether for 20 minutes, filter, evaporate the filtrate to dryness and dissolve the residue in 1 ml of ethyl acetate as the reference drug solution. Carry out the method for thin layer chromatography (Appendix Ⅵ B), using silica gel G as the coating substances and a mixture of *n*-hexane and ethyl acetate (9 : 1) as the mobile phase. Apply separately to the plate 5 μl of the test solution obtained under the test for Identification (3) and 2 μl of the above reference drug solution. After developing and removal of the plate, dry in air, examine under ultraviolet light at 365 nm. The fluorescent spots in the chromatogram obtained with the test solution correspond in position and colour to the spots in the chromatogram obtained with the reference drug solution.

(5) Grind well 10 g of the water-honeyed pills, or 12 g of big honeyed pills, cut into pieces, with 6 g of kieselguhr, heat under reflux in 40 ml of ether for 20 minutes, filter. Add 30 ml of ethanol to the drug residue, expelled the solvent, heat under reflux for 30 minutes, allow to cool and filter. Add 2 ml of hydrochloric acid in the filtrate, heat under reflux for 1 hour, concentrate to about 5 ml, add 10 ml of water, extract with two 20-ml quantities of petroleum ether (60-90℃), combine the extracts, evaporate to dryness and dissolve the residue in 1 ml of ethanol as the test solution. Dissolve oleanolic acid CRS in ethanol to prepare a solution containing 1 mg per ml as the reference solution. Carry out the method for thin layer chromatography (Appendix Ⅵ B), using silica gel G as the coating substances and a mixture of chloroform and acetone (9 : 1) as the mobile phase. Apply separately to the plate 10 μl of the test solution and 5 μl of the reference solution. After developing and removal of the plate, dry in air. Spray with 10% sulfuric acid in ethanol, heat at 105℃ for 5 minutes. The spot in the chromatogram obtained with the test solution corresponds in position and colour to the spot in the chromatogram obtained with the reference drug solution.

Other requirements Comply with the generl requirements for pills (Appendix Ⅰ A).

Action To expel *wind* and *dampness*, dredge meridians to kill pain, and reinforce the liver and kidney.

Indications Impediment diseases with pain due to accumulation of *wind-dampness* and deficiency in the liver and kidney with manifestations of muscular contracture and numbness of hands and feet, and aching pain in the lower back and legs.

Usage and dosage 6 g of water-honeyed pills or 1 big honeyed pill, 2-3 times a day.

Precaution Be cautious about pregnant women.

Strength 9 g per big honeyed pill

Storage Preserve in tightly closed containers.

Tianwang Buxin Wan
(天王补心丸)

Tianwang Buxin Pills

Ingredients Radix et Rhizoma Salviae Miltiorrhizae 25 g; Radix Angelicae Sinensis 50 g; Rhizoma Acori Tatarinowii 25 g; Radix Codonopsis 25 g; Poria 25 g; Fructus Schisandrae Chinensis 50 g; Radix Ophiopogonis 50 g; Radix Asparagi 50 g; Radix Rehmanniae 200 g; Radix Scrophulariae 25 g; Radix Polygalae (processed) 25 g; Semen Ziziphi Spinosae (stir-baked) 50 g; Semen platycladi 50 g; Radix Platycodonis 25 g; Radix et Rhizoma Glycyrrhizae 25 g; Cinnabaris 10 g.

Procedure Levigate Cinnabaris to very fine powder and pulverize the other fifteen ingredients to fine powder. Triturate all the powders, sift and mix thoroughly. To each 100 g of the powder add 20-30 g of refined honey and a quantity of water to make pills and dry; or add 50-70 g of refined honey to make small honeyed pills or big honeyed pills.

Description Brownish-black water-honeyed pills, brownish-black small honeyed pills or big honeyed pills; odour, slightly aromatic; taste, sweet and slightly bitter.

Identification (1) Microscopical: Irregular branched masses colourless, dissolved in chloral hydrate solution; hyphae colourless or pale brown, 4-6 μm in diameter. Stone cells trapezoidal or polygonal, slightly acute at one end, relatively thick walled and sparsely pitted. Stone cells yellowish-brown or colourless, subrectangular, subrounded or irregular, striations distinct up to about 94 μm in diameter. Stone cells rectangular or long-stripped, 50-110 μm in diameter, with very fine pits. Stone cells of testa pale yellowish-brown, subpolygonal in surface view, with relatively thickened walls, fine and dense pit-canals, lumina containing dark-brown contents. Needle crystals of calcium oxalate in bundles or scattered, 24-50 μm long, about 3 μm in diameter. Cork cells reddish-brown, polygonal and thin walled. Anastomosing laticiferous tubes 14-25 μm in diameter, containing yellow granule-like substances. Parenchyma greyish-brown to blackish-brown, cells mostly shrunken, and each containing a brown nucleus-like mass. Fibre bundles surrounded by parenchymatous cells containing prisms of calcium oxalate, forming crystal fibres. Cells of endotesta brownish-yellow, rectangular or subsquare in surface view, with beaded anticlinal walls. Irregular minute granules dark brownish-red and lustrous, with dark black edge.

(2) Pulverize 1 g or half a big honeyed pill, spread in a crucible and cover with a long neck funnel. Heat gently until the powder is slightly charred. Cool, remove the funnel, and wash the inner wall with 5 ml of water. Examine the washing under ultraviolet light at 365 nm; a pale bluish-green fluorescence is shown.

(3) Wash 1 g or half a big honeyed pill with water, a small quantity of vermillion precipitate is obtained. Moisten the precipitate with hydrochloric acid and scrape it on the smooth surface of a copper plate, a silver-white lustre is shown which disappears on heating or baking.

(4) Triturate 18 g of water-honeyed pills to powder, or cut 27 g of small honeyed pills or big honeyed pills into pieces, add 100 ml of water, ultrasonicate for 30 minutes, adjust to pH 2 with hydrochloric acid and filter. Extract the filtrate with three 60-ml quantities of ether, combine the extract, expel the solvent and dissolve the residue in 1 ml of methanol as the test solution. Dissolve protocatechualdehyde CRS in methanol to prepare a solution containing 1 mg per ml as the reference solution. Carry out the method for thin layer chromatography (Appendix Ⅵ B), using silica gel GF_{254} as the coating substances and a mixture of chloroform, acetone and formic acid (8 : 1 : 0.8) as the mobile phase. Apply separately to the plate 10 μl of the test solution and 3 μl of the reference solution. After developing and removal of the plate, dry in air, examine under ultraviolet light at 254 nm. The spot in the chromatogram obtained with the test solution corresponds in position and colour to the spot in the chromatogram obtained with the reference solution.

Other requirements Comply with the general requirements for pills (Appendix Ⅰ A).

Action To replenish *yin* and nourish blood, and reinforce the heart to anchor the mind.

Indication Insufficient *heart-yin*, palpitation, amnesia, insomnia, dreamfulness and dry stools.

Usage and dosage 6 g of water-honeyed pills, 9 g of small honeyed pills, or 1 big honeyed pill, twice a day.

Strength 9 g per big honeyed pill

Storage Preserve in tightly closed containers.

Tiaojing Cuyun Wan
(调经促孕丸)

Tiaojing Cuyun Pills

Ingredients Cornu Cervi Pantotrichum (burn away soften hairs) 5 g; Herba Epimedii (processed) 10 g; Rhizoma Curculiginis 10 g; Radix Dipsaci 10 g; Herba Taxilli 10 g; Semen Cuscutae 15 g; Fructus Lycii 10 g; Fructus Rubi 10 g; Rhizoma Dioscoreae 30 g; Semen Nelumbinis (plumule removed) 10 g; Poria 15 g; Radix Astragali 10 g; Radix Paeoniae Alba 15 g; Semen Ziziphi Spinosae (stir-baked) 10 g; Ramulus Uncariae cum Uncis 10 g; Radix et Rhizoma Salviae Miltiorrhizae 15 g; Radix Paeoniae Rubra 15 g; Caulis Spatholobi 30 g.

Procedure Pulverize the above eighteen ingredients to fine powder, sift and mix well. To each 100 g of the powder add 40-50 g of refined honey and a quantity of water to make water-honeyed pills, dry and coat with glue.

Description Brown water-honeyed pills; taste, sweet, slightly bitter.

Identifications (1) Microscopical: Palisade cells of testa in two rows, cells in inner row longer than outer ones with bright strip. Nonglandular hair unicellular, walls thickened, lignified, the remains after falling similar to stone cells in shape. Irregular branched masses colourless, dissolved in chloral hydrate TS; hyphae colourless or pale brown, 4-6 μm in diameter. Cells of endotesta brownish-yellow, rectangular or subsquare in surface view with beaded anticlinal walls.

(2) Pulverize 5 g of the pills, add 20 ml of chloroform, ultrasonicate for 20 minutes. Filter and concentrate the filtrate to 0.5 ml as the test solution. Prepare a solution of 0.5 g of Radix et Rhizoma Salviae Miltiorrhizae reference drug as the reference drug solution in the same manner. Carry out the method for thin layer chromatography (Appendix Ⅵ B), using silica gel G as the coating substances and a mixture of benzene and ethyl acetate (9 : 1) as the mobile phase. Apply separately to the plate 6 μl of each of the above two solutions. After developing and

removal of the plate, dry in air. The spots in the chromatogram obtained with the test solution correspond in position and colour to the spots in the chromatogram obtained with the reference drug solution.

(3) Pulverize 1 g to fine powder, add 60 ml of methanol, heat under reflux for 1 hour and filter. Evaporate the filtrate to dryness and dissolve the residue in 15 ml of water. Extract with three 20-ml quantities of *n*-butanol saturated with water. Combine the *n*-butanol solutions, wash with a 1% solution of sodium hydroxide twice (100 ml and 50 ml), then wash with 50 ml of water saturated with *n*-butanol, separate the *n*-butanol layer and evaporate to dryness. Dissolve the residue in 2 ml of methanol as the test solution. Prepare a solution of 1 g of Radix Astragali reference drug with 30 ml of methanol in the same manner as the reference drug solution. Dissolve astragaloside Ⅳ CRS in methanol to prepare a solution containing 1 mg per ml as the reference solution. Carry out the method for thin layer chromatography (Appendix Ⅵ B), using silica gel G as the coating substance and the lower layer of a mixture of chloroform, methanol and water (13 : 7 : 2), standing below 10 ℃, as the mobile phase. Apply separately 5 μl of the test solution and 3 μl of each of the reference solution and the reference drug solution to the plate. After developing and removal of the plate, dry in air, spray with 10% sulfuric acid in ethanol. and heat at 105℃ to the spots clear. The spots in the chromatogram obtained with the test solution correspond in position and colour to the spots in the chromatograms obtained with the reference solution and the reference drug solution. Examine under ultraviolet at 365 nm, the fluorescent spots in the chromatogram obtained with the test solution correspond in position and colour to the fluorescent spots in the chromatograms obtained with the reference solution and the reference drug solution.

(4) Boil 5 g of the pills with 100 ml of water for 30 minutes, cool and filter with absorbent cotton. Extract the filtrate with ethyl acetate twice (40 ml and 20 ml), combine the ethyl acetate extracts evaporate to dryness, and dissolve the residue in 1 ml of ethyl acetate as the test solution. Decoct 0.5 g of Fructus Lycii reference drug in 40 ml of water for 15 minutes, cool and filter. Extract the filtrate by shaking with 20 ml of ethyl acetate and concentrate the ethyl acetate extract to 1 ml as the reference drug solution. Carry out the method for thin layer chromatography (Appendix Ⅵ B), using silica gel G as the coating substance and a mixture of chloroform, ethyl acetate and formic acid (3 : 1 : 0.1) as the mobile phase. Apply separately 5 μl of each of the two solutions to the plate. After developing and removal of the plate, dry in air and examine under ultraviolet light at 365 nm. The fluorescent spots in the chromatogram obtained with the test solution correspond in position and colour to the spots in the chromatogram obtained with the reference drug solution.

Other requirements Comply with the general requirements for pills (Appendix Ⅰ A).

Assay Carry out the method for high performance liquid chromatography (Appendix Ⅵ D).

Chromatographic system and system suitability Use octadecylsilane bonded silica gel as the stationary phase and a mixture of methanol and water (26 : 74) as the mobile phase. As detector a spectrophotometer set at 230 nm. Maintain the column temperature at 35℃. The number of theoretical plates of the column is not less than 2500, calculated with the reference to the peak of paeoniflorin.

Reference solution Dissolve a quantity of paeoniflorin CRS, weighed accurately, in methanol to prepare a solution containing 0.1 mg per ml as the reference solution.

Test solution Grind the pills, obtained under the test of weight variation, to fine powder, weigh accurately 1.5 g in a Soxhlet's extractor, add a quantity of ether, heat under reflux for 3 hours, discard the ether extract and expel the solvent remained in the residue. Place the residue along with the filter paper in a stopper conical flask, add accurately 50 ml of methanol, stopper well, and weigh accurately. Ultrasonicate (power, 250 W; frequency, 25 kHz) for 30 minutes, cool, weigh again, replenish the loss of the weight with methanol, shake well and filter. Measure accurately 25 ml of the successive filtrate, and evaporate to dryness. Dissolve the residue in a quantity of water, apply to a D 101 macroporous resin column (1.5 cm in diameter, 12 cm in length), elute with water to the eluates colourless, and then elute with diluted ethanol. Collect 100 ml of the successive eluates, evaporate to dryness, dissolve the residue in a quantity of methanol, transfer to a 25 ml volumetric flask, dilute with methanol to volume, and shake well. Filter and use the successive filtrate as the test solution.

Procedure Inject accurately 10 μl of each of the reference solution and the test solution into the column, respectively, and calculate the content.

It contains not less than 1.0 mg per gram of paeoniflorin ($C_{23}H_{28}O_{11}$), referred to Radix Paeoniae Alba and Radix Paeoniae Rubra.

Action To warm the kidney and invigorate the spleen, and promote blood circulation to regulate menstruation.

Indications Irregular menstruation, amenorrhea, dysmenorrhea, sterility caused by *yang* deficiency in the spleen and kidney and stagnation of blood, with manifestations of delayed menstrual periods, scanty menstrual blood with clots, cold pain in the lower abdomen during menstruation, or amenia for a long time, sterility, cold pain in the lower back and knees.

Usage and dosage 5 g (50 pills), twice a day; taken continuously for 20 days from the fifth day of menstrual cycle; or taken continuously for 20 days to a month for disorder of menstrual cycles, Three successive months make one course of treatment or follow doctor's advice.

Precaution It is forbidden to prescribe to patients with hyperactivity of *fire* caused by *yin* deficiency and menorrhagia.

Strength 10 g per 100 pills

Storage Preserve in tightly closed containers.

Tinctura Belladonnae (颠茄酊, Dianqie Ding)

Belladonna Tincture

Belladonna Tincture is the tincture prepared from Herba Belladonnae.

Procedure Take 1000 g of coarse powder of Herba Belladonnae, carry out the method described under Extractum Belladonnae to prepare a thick extract. Determine the content of alkaloids, then add a quantity of 85% ethanol and dilute with water to comply with the regulation of alkaloids content and ethanol content, allow to stand, clarify, and filter.

Description A brownish-red or brownish-green liquid; odour, slightly stinking.

Identification (1) Comply with the test for Identification described under Extractum Belladonnae, using a quantity of

the resulting solution obtained in Assay.
(2) To 10 ml of the tincture, add 10 ml of water and 10 ml of concentrated ammonia TS, extract with three 10-ml quantities of ether by shaking, combine the ether solution, evaporate to dryness, dissolve the residue in 1 ml of chloroform as the test solution. Dissolve atropine sulfate CRS in methanol to prepare a solution containing 2 mg per ml as the reference solution. Carry out the method for thin layer chromatography (Appendix Ⅵ B), using silica gel G as the coating substance and a mixture of ethyl acetate, methanol and concentrated ammonia TS (17 : 2 : 1) as the mobile phase. Apply separately to the plate 5 μl of each of the two solutions. After developing and removal of the plate, dry in air, and spray with dilute potassium iodobismuthate TS. The spot in the chromatogram obtained with the test solution corresponds in position and colour to the spot in the chromatogram obtained with the reference solution.

Ethanol content 60 per cent-70 per cent (Appendix Ⅸ M).

Other requirements Comply with the general requirements for tinctures (Appendix Ⅰ N).

Assay Evaporate 100 ml, accurately measured, in an evaporating dish, to about 10 ml on a water bath. Dissolve the precipitate in a quantity of ethanol if necessary, transfer to a separator, wash the evaporating dish with 10 ml of sulfuric acid solution (0.1 mol/L) in portions, and combine the washings into the separator. Extract the solution with several 10-ml quantities of chloroform by shaking, until the chloroform layer is colourless. Combine the chloroform solutions, wash with 10 ml of sulfuric acid solution (0.1 mol/L), combine the acid washings solution and carry out the Assay described under Herba Belladonnae beginning at the words "make the solution alkaline by adding excess of concentrated ammonia TS...". Each ml of sulfuric acid (0.01 mol/L) VS is equivalent to 5.788 mg of hyoscyamine. It contains not less than 0.28 mg and not more than 0.32 mg of alkaloids per ml, calculated as hyoscyamine ($C_{17}H_{23}NO_3$).

Action Anticholinergic, to relieve spasm of smooth muscles and inhibit secretion of glands.

Indications Gastric and duodenal ulcer, colicky pain in the gastrointestinal tract, kidney, gallbladder and so on.

Usage and dosage Usual dose: 0.3-1 ml; 1-3 ml a day. Maximum dose: 1.5 ml; 4.5 ml a day.

Precaution Contraindicated for glaucoma patients.

Storage Preserve in tightly closed containers, stored in a cool place.

Tinctura Polygalae (远志酊, Yuanzhi Ding)

Thinleaf Milkwort Tincture

Thinleaf Milkwort Tincture is the tincture prepared from Extractum Polygalae Liquidum.

Procedure To 200 ml of Extractum Polygalae Liquidum, add 60% ethanol to make 1000 ml, mix, allow to stand and filter.

Description A brown liquid.

Ethanol content 50 per cent-58 per cent (Appendix Ⅸ M).

Other requirements Comply with the general requirements for tinctures (Appendix Ⅰ N).

Action To expel *phlegm*.

Indications Coughing with difficult expectoration of *phlegm*.

Usage and dosage 2-5 ml; 6-15 ml a day.

Storage Preserve in tightly closed containers.

Tinctura Zingiberis (姜酊, Jiang Ding)

Ginger Tincture

Ginger Tincture is the tincture prepared from Extractum Zingiberis Liquidum.

Procedure To 200 ml of Extractum Zingiberis Liquidum add 90% ethanol to make 1000 ml, mix well, allow to stand and filter.

Description A pale yellow liquid; odour, aromatic, resembling Rhizoma Zingiberis; taste, pungent.

Ethanol content 80 per cent-88 per cent (Appendix Ⅸ M).

Other requirements Comply with the general requirements for tinctures (Appendix Ⅰ N).

Action To invigorate the stomach and expel wind.

Usage and dosage 2-4 ml; 6-12 ml a day.

Storage Preserve in tightly closed containers.

Tongguan San (通关散)

Tongguan Powder

Ingredients Fructus Gleditsiae Abnormalis 500 g; Herba Centipedae 250 g; Radix et Rhizoma Asari 250 g.

Procedure Pulverize the above three ingredients to fine powder, sift, mix thoroughly.

Description A pale yellowish-brown powder; odour, aromatic; taste, pungent and irritant.

Identification Microscopical: Epidermal cells of pericarp reddish-brown, subpolygonal in surface view, walls relatively thickened, with fine granules on the surface; fibre bundles pale yellow, surrounded by cells containing prisms or clusters occasionally of calcium oxalate, forming crystal fibres, frequently accompanied by subsquare sclerenchymatous cells. Stomata anomocytic, occurring in fragments of leaves, about 14 μm in diameter, subsidiary cells 4-6 in number. Hypodermal cells subrectangular, with slightly sinuous walls, carrying subsquare or oblong secretory cells.

Other requirements Comply with the general requirments for powders (Appendix Ⅰ B).

Action To free the orifices to resuscitate.

Indications Syncope, lockjaw and coma due to *phlegm* obstructing the orifices.

Usage and dosage A small quantity is insufflated into the nostrils for sneezing.

Precaution Be cautious about pregnant women.

Strength 1.5 g per bottle

Storage Preserve in tightly closed containers.

Tongjingbao Keli
(痛经宝颗粒)

Tongjingbao Granules

Ingredients Flos Carthami; Radix Angelicae Sinensis; Cortex Cinnamomi; Rhizoma Sparganii; Rhizoma Curcumae; Radix et Rhizoma Salviae Miltiorrhizae; Faeces Trogopterori; Radix Aucklandiae; Rhizoma Corydalis (processed with vinegar).

Procedure Distill volatile oil of Cortex Cinnamomi and Radix Aucklandiae, decoct the drug residue and the other ingredients with water for 3 times, 1 hour for the first time, half an hour for the other two times. Combine the decoction, filter, stand and separate the supernatant, concentrate to a thin extract with a relative density of 1.10 (80℃). Allow to cool to room temperature, add ethanol to a content of 70% ethanol, stir thoroughly and stand. Separate the supernatant, recover ethanol and concentrate to a thin extract with a relative density of 1.24 (80℃). Add a quantity of sucrose and dextrin, make to 1000 g granules and dry; or add a quantity of excipient, make to 400 g granules without sucrose and dry. Spray the above volatile oil in ethanol and mix thoroughly.

Description Yellow to brownish-yellow granules, or yellowish-brown to brown granules without sucrose; odour, aromatic; taste, sweet and slightly bitter, or slightly sweet and slightly bitter (granules without sucrose).

Identification (1) Dissolve 1 pack of the granules with 20 ml of 0.1mol/L solution of hydrochloric acid by stiring thoroughly, centrifuge, separate the supernatant and extract with two 20-ml quantities of ether by shaking. Combine the extracts, expel the solvent and dissolve the residue in 1 ml of ethanol to prepare a solution as the test solution. Dissolve protocatechuic aldehyde CRS in ethanol to prepare a solution containing 1 mg per ml as the reference solution. Carry out the method for thin layer chromatography (Appendix Ⅵ B), using silica gel G as the coating substances and a mixture of chloroform, acetone, and formic acid (60 : 5 : 2) as the mobile phase. Apply separately to the plate 2 μl of the test solution and 1 μl of the reference solutions. After developing and removal of the plate, dry in air. Spray with 10% ferric chloride in ethanol. The spot in the chromatogram obtained with the test solution corresponds in position and colour to the spot in the chromatogram obtained with the reference solution.

(2) Dissolve 2 packs of the granules with 40 ml of water or 20 ml for the granules without sucrose, by stiring, and centrifuge. To the supernatant adjust to pH 9 with ammonia TS, extract with two 20-ml quantities of ether by shaking, combine the extracts, expel the solvent and dissolve the residue in 1 ml of ethanol to prepare a solution as the test solution. Dissolve tetrahydropalmatine CRS in ethanol to prepare a solution containing 1 mg per ml as the reference solution. Carry out the method for thin layer chromatography (Appendix Ⅵ B), using silica gel G as the coating substances, mixed with 1% solution of sodium hydroxide, and a mixture of *n*-hexane, chloroform, and methanol (15 : 8 : 2) as the mobile phase. Apply separately to the plate 5 μl of the test solution and 1 μl of the reference solution. After developing and removal of the plate, dry in air. Expose to iodine vapour to the spots clear. The spot in the chromatogram obtained with the test solution corresponds in position and colour to the spot in the chromatogram obtained with the reference solution. Examine under ultraviolet light at 365 nm, the fluorescent yellow spots are shown.

(3) Macerate 0.5 g of Radix Aucklandiae reference drug in 1 ml of cyclohexane for 1 hour, use the supernatant as the reference drug solution. Carry out the method for thin layer chromatography (Appendix Ⅵ B), using silica gel G as the coating substances and a mixture of cyclohexane and acetone (10 : 3) as the mobile phase. Apply separately to the plate 5 μl of the test solution obtained under the test of Identification (2) and 1 μl of the above reference drug solution. After developing and removal of the plate, dry in air. Spray with 5% vanillin in sulfuric acid, heat to the spots clear. The spots in the chromatogram obtained with the test solution correspond in position and colour to the spots in the chromatogram obtained with the reference drug solution.

Other requirements Comply with the general requirements for granules (Appendix Ⅰ C).

Action To warm meridians and resolve blood stasis, and regulate *qi* flow to relieve pain.

Indications Dysmenorrhea, cold pain in the lower abdomen, menstruation disorders, dark red menstrual blood due to retention of *cold*, stagnation of *qi* and blood stasis.

Usage and dosage 1 pack, twice a day, taken after dissolved in warm boiled water, one week before menstruation and cessation of it 3 days after menstruation, and continuously prescribed in 3 menstrual cycles.

Strength (1) 10 g per pack
(2) 4 g per pack (granules without sucrose)

Storage Preserve in tightly closed containers.

Tongjing Wan
(痛经丸)

Tongjing Pills

Ingredients Radix Angelicae Sinensis 138 g; Radix Paeoniae Alba 92 g; Rhizoma Chuanxiong 69 g; Radix Rehmanniae Praeparata 184 g; Rhizoma Cyperi (stir-baked with vinegar) 138 g; Radix Aucklandiae 23 g; Pericarpium Citri Reticulatae Viride 23 g; Fructus Crataegi (carbonized) 138 g; Rhizoma Corydalis 92 g; Rhizoma Zingiberis Praeparatum 23 g; Cortex Cinnamomi 23 g; Radix et Rhizoma Salviae Miltiorrhizae 138 g; Fructus Leonuri 46 g; Flos Carthami 46 g; Herba Leonuri 551.7 g; Faeces Trogopterori (stir-baked with vinegar) 92 g.

Procedure Decoct Herba Leonuri, Fructus Leonuri, Radix et Rhizoma Salviae Miltiorrhizae and 46 g of Radix Rehmanniae Praeparata with water twice, combine the decoctions, filter, concentrate the filtrate to a quantity of amount. Pulverize the other twelve ingredients and 138 g of Radix Rehmanniae Praeparata to fine powder, sift and mix thoroughly, make pills with the above concentrated solution (reserve a quantity for coating) and a quantity of water, coat, dry, polish, and make 1000 g pills.

Description Brownish-black concentrated watered pills; taste, bitter.

Identification (1) Microscopical: Pollen grains spheroidal or ellipsoidal, about 60 μm in diameter, extine with spines and 3 germinal apertures. Fragments of sclerenchyma greenish-yellow, cells polygonal or slightly elongated, walls slightly sinuous, some beaded, with fine and dense pits. Septate fibres with slightly thickened and unlignified walls, oblique pits distinct. Stone cells of pericarp pale purplish-red. red or yellowish-brown, subrounded or polygonal, up

to about 125 μm in diameter. Stone cells subsquare or subrounded, 32-88 μm in diameter walls thin at one side. Prisms of calcium oxalate abundant in parenchyma. Clusters of calcium oxalate 18-32 μm in diameter, occurring in parenchymatous cells, often arranged in rows, or several in one cell. Secretory cells subrounded, containing pale brownish-yellow to reddish-brown secretion, surrounded by radially arranged cells. Parenchyma greyish-brown to blackish-brown, cells mostly shrunken, and each containing a brown nucleus-like mass.

(2) Pulverize 2 g of the pills to fine powder, macerate in 5 ml of ethanol, shake constantly for 1 hour and filter. Evaporate the filtrate to dryness. Dissolve the residue in 0.5 ml of ethanol as the test solution. Dissolve paeoniflorin CRS in ethanol to prepare a solution containing 1 mg per ml as the reference solution. Carry out the method for thin layer chromatography (Appendix Ⅵ B), using silica gel G as the coating substance and a mixture of chloroform, ethyl acetate, methanol and formic acid (40 : 5 : 10 : 0.2) as the mobile phase. Apply separately to the plate 3-4 μl of the test solution and 1 μl of the reference solution. After developing and removal of the plate, dry in air. Spray with 5% vanillin in sulfuric acid and heat to the spots clear. The spot in the chromatogram obtained with the test solution corresponds in position and colour to the spot in the chromatogram obtained with the reference solution.

(3) Pulverize 10 g of the pills, to fine powder, place to a stopper conical flask, add 2 ml of concentrated ammonia TS and 40 ml of chloroform, stopper tightly, ultrasonicate for 45 minutes, and filter, evaporate the filtrate to dryness. Dissolve the residue in a quantity of chloroform, and apply to a prepared neutral aluminium oxide column (100-200 mesh, 2g, 1.0 cm in internal diameter) and elute with 30 ml of chloroform, collect the eluate. Evaporate the eluate on a water bath to dryness, and dissolve the residue in 2 ml of chloroform as the test solution. Dissolve tetrahydropalmatine CRS in ethanol to prepare a solution containing 1 mg per ml as the reference solution. Carry out the method for thin layer chromatography (Appendix Ⅵ B), using silica gel G as the coating substance and a mixture of *n*-hexane, chloroform, and methanol (10 : 6 : 1) as the mobile phase. Apply separately to the plate 10 μl of each of the test solution and the reference solution. After developing and removal of the plate, dry in air, and spray with dilute potassium Iodobismuthate TS, the spot in the chromatogram obtained with the test solution corresponds in position and colour to the spot in the chromatogram obtained with the reference solution.

(4) Pulverize 10 g of the pills, to fine powder, add 50 ml of ether, ultrasonicate for 30 minutes, and filter, evaporate the filtrate to dryness. Dissolve the residue in 2 ml of ethyl acetate as the test solution. To 2 g of Radix Angelicae Sinensis, add 20 ml of ether, prepare a reference drug solution in the same manner. Carry out the method for thin layer chromatography (Appendix Ⅵ B), using silica gel G as the coating substance and a mixture of n-hexane and ethyl acetate (9 : 1) as the mobile phase. Apply separately to the plate 10 μl of the test solution and 5 μl of the reference drug solution. After developing and removal of the plate, dry in air. Examine under ultraviolet light at 365nm. The fluorescent spots in the chromatogram obtained with the test solution correspond in position and colour to the spots in the chromatogram obtained with the reference drug solution.

Other requirements Comply with the general requirements for pills (Appendix Ⅰ A).

Assay Carry out the method for high performance liquid chromatography (Appendix Ⅵ D).

Chromatographic system and system suitability Use octadecylsilane bonded silica gel as the stationary phase, and a mixture of methanol and 0.3% solution of acetic acid (25 : 75) as the mobile phase. As detector a spectrophotometer set at 232 nm. The number of theoretical plates of the column is not less than 2000, calculated with the reference to the peak of paeoniflorin.

Reference solution Weigh accurately a quantity of paeoniflorin CRS, dissolve in 50% methanol to prepare a solution containing 60 μg per ml.

Test solution Weigh accurately 2 g of the pills, pulverized to fine powder, in a stopper conical flask, add accurately 50 ml of methanol, closely stopper and weigh. Heat under reflux for 1 hour, cool, weigh again, replenish the lost weight with methanol, mix well and filter. Measure accurately 20 ml of the successive filtrate, evaporate to dryness, dissolve the residue in 50% methanol, and transfer to a 10 ml volumetric flask, add 50% methanol to volume, mix well and filter. Discard the initial filtrate, and use the successive filtrate as the test solution.

Procedure Inject accurately 10 μl of each of the reference solution and the test solution into the column respectively and calculate.

It contains not less than 0.58 mg of paeoniflorin ($C_{23}H_{28}O_{11}$) per gram, referred to Radix Paeoniae Alba.

Action To warm meridians and promote blood circulation to regulate menstruation and kill pain.

Indications Dysmenorrhea, irregular menstruation due to retention of *cold* and blood stasis in the *lower-energizer*, with manifestations of delayed menstrual cycles, scanty menstrual blood with clots, cold pain in the lower abdomen during menstruation, alleviated with warmth.

Usage and dosage 6-9 g, 1-2 times a day, to be taken before menstruation.

Precaution Contraindicated for pregnant women.

Strength 60 g per bottle

Storage Preserve in tightly closed containers.

Tongqiao Biyan Pian
(通窍鼻炎片)

Tongqiao Biyan Tablets

Ingredients Fructus Xanthii (stir-baked) 200 g; Radix Saposhnikoviae 150 g; Radix Astragali 250 g; Radix Angelicae Dahuricae 150 g; Flos Magnoliae 150 g; Rhizoma Atractylodis Macrocephalae (stir-baked) 150 g; Herba Menthae 50 g.

Procedure Pulverize Radix Angelicae Dahuricae and 80 g of Rhizoma Atractylodis Macrocephalae to fine powder. Decoct remained Rhizoma Atractylodis Macrocephalae, Fructus Xanthii and other four ingredients with water twice, each for 2 hours, combine the decoctions, filter, concentrate the filtrate in vacuum to a thin extract with a relative density of 1.28-1.32 (80℃), mix thoroughly with the above powder, dry, pulverize, make granules, compress into 1000 tablets and coat with sugar.

Description Sugar coated tablets with yellowish-brown to dark brown core; tase, slightly bitter, pungent, and cool.

Identification (1) Microscopical: Needles of calcium oxalate fine, 10-32 μm long, irregularly filling in parenchymatous cells.

(2) Pulverize 10 tablets, removed sugar coats, to fine powder, add 10 ml of petroleum ether (60-90℃), ultrasonicate for 20 minutes. Filter, reserve the residue for the later use and evaporate the filtrate to 1 ml as the test solution. To 0.1 g of

Radix Angelicae Dahuricae reference drug, add 1 ml of petroleum ether (60-90℃), ultrasonicate for 20 minutes, allow to stand, and use the supernatant as the reference drug solution. Carry out the method for thin layer chromatography (Appendix Ⅵ B), using silica gel G as the coating substance and a mixture of petroleum ether (30-60℃) and ether (3 : 2) as the mobile phase. Apple separately 10 μl of each of the two solutions to the plate. After developing and removal of the plate, dry in air, examine under ultraviolet light at 365 nm, the fluroscent spots in the chromatogram obtained with the test solution correspond in position and colour to the spots in the chromatogram obtained with the reference drug solution.

(3) Heat under reflux the residue extracted with petroleum ether and expelled the solvent, obtained under the test for Identification (2), in 15 ml of *n*-butanol for 2 hours, filter and wash the filtrate with three 15-ml quantities of 1% solution of sodium hydroxide. Discard the alkaline solution, and then wash again with water saturated with *n*-butanol until the solution become neutral and discard the washings. Evaporate the *n*-butanol solution to dryness, add 2 ml of methanol to disolve the residue and use as the test solution. Dissolve astragaloside Ⅳ CRS in methanol to prepare a solution containing 1 mg per ml as the reference solution. Carry out the method for thin layer chromatography (Appendix Ⅵ B), using silica gel G as the coating substance and the lower layer of chloroform, methanol and water (63 : 35 : 10), stand bellow 10℃, as the mobile phase. Apply separately 5-10 μl of each of the two solutions to the plate. After developing and removal of the plate, dry in air, spray with 10% sulfuric acid in ethanol, heat at 105℃ to the spots clear. Examine in sunlight, the spot in the chromatogram obtained with the test solution corresponds in position and colour to the spot in the chromatogram obtained with the reference solution; and then examine under ultraviolet light at 365 nm, the same spot show the same colour of fluorescence.

Other requirements Comply with the general requirements for tablets (Appendix Ⅰ D).

Action To expel *wind* and strengthen the superficies, and disseminate *lung-qi* to free the orifices.

Indications Severe or mild stuffy nose, running nose or thick nasal discharge, and foreheadache due to accumulation of *wind-heat* in the lung and exterior deficiency; chronic rhinitis, allergic rhinitis and nasosinusitis with above sympotoms.

Usage and dosage 5-7 tablets, 3 times a day.

Storage Preserve in tightly closed containers.

Tongru Keli (通乳颗粒)

Tongru Granules

Ingredients Radix Astragali 44.44g; Radix Rehmanniae Praeparata 33.33g; Medulla Tetrapanacis 44.44g; Herba Dianthi 44.44g; Radix Trichosanthis 33.33g; Fructus Liquidambaris 44.44g; Radix Rhapontici 44.44g; Radix Codonopsis 44.44g; Radix Angelicae Sinensis 44.44g; Rhizoma Chuanxiong 33.33g; Radix Paeoniae Alba (stir-baking with wine) 33.33g; Semen Vaccariae 66.67g; Radix Bupleuri 33.33g; Squama Manis (scalded) 3.17g; Cornu Cervi Degelatinatum 22.22g.

Procedure The above ingredients, except Radix Rhapontici, Radix Angelicae Sinensis, Rhizoma Chuanxiong, Radix Bupleuri, decoct the other eleven ingredients with water for 2 times, 2 hours for the first time, and 1.5 hours for the second time. Combine the decoctions, filter and concentrate the filtrate to a thick extract for the later use. To the Radix Rhapontici, Radix Angelicae Sinensis, Rhizoma Chuanxiong, Radix Bupleuri add 6 times volume of 70% ethanol, heat under reflux again for 2 times, each for 2 hours, filter, combine the filtrate, recover ethanol and concentrate to a thick extract. Combine the above two thick extracts, add a quantity of sucrose, make granules and dry; make to 1000 g granules; or add a quantity of soluble starch, dextrin, stevioside, make granules and dry, make to 333 g granules (without sucrose).

Description Brownish-yellow to brown granules; taste, sweet or slightly bitter (without sucrose).

Identification (1) To 30g or 10g (without sucrose) of the contents, grind to fine powder, add 50 ml of methanol, ultrasonicate for 20 minutes, filter, evaporate the filtrate to dryness, dissolve the residue in 15 ml of water, extract with two 20-ml quantities of *n*-butanol saturated with water by shaking, combine the *n*-butanol extracts, wash separately with 30 and 20 ml of ammonia TS. Separate *n*-butanol extract and evaporate to dryness, dissolve the residue in 1 ml of methanol as the test solution. Dissolve astragaloside Ⅳ CRS in methanol to prepare a solution containing 0.5 mg per ml as the reference solution. Carry out the method for thin layer chromatography (Appendix Ⅵ B), using silica gel G as the coating substance, and the lower layer of chloroform, methanol and water (13 : 7 : 2, stand below 10℃ for 12 hours) as the mobile phase. Apply separately 5 μl of the reference solution and 10-20 μl of the test solutions to the plate. After developing and removal of the plate, dry in air. Spray with 10% sulfuric acid in ethanol and heat at 105℃ to the spot clear. Examine in daylight, the spot in the chromatogram obtained with the test solution corresponds in position and colour to the spot in the chromatogram obtained with the reference solution. Examine under ultraviolet light at 365 nm, the fluorescent spot in the chromatogram obtained with the test solution corresponds in position and colour to the spot in the chromatogram obtained with the reference solution.

(2) To 20g or 6.7g (without sucrose) of the contents, grind to fine powder, add 40 ml of methanol, ultrasonicate for 20 minutes, cool and filter, evaporate the filtrate to dryness, dissolve the residue in 15 ml of water, extract with two 20-ml quantities of ethyl acetate by shaking, combine the extracts, evaporate to dryness, dissolve the residue im 1 ml of ethyl acetate as the test solution. Prepare a solution of 1 g of Radix Rhapontici reference drug and 20 ml of methanol in the same manner as the reference drug solution. Carry out the method for thin layer chromatography (Appendix Ⅵ B), using silica gel G as the coating substance, and a mixture of cyclohexane and butanone (4 : 1) as the mobile phase. Apply separately 10 μl of the reference drug solution and 10-20 μl of the test solution to the plate. After developing and removal of the plate, dry in air. Examine under ultraviolet light at 365 nm, the fluorescent main spot in the chromatogram obtained with the test solution corresponds in position and colour to the spot in the chromatogram obtained with the reference drug solution.

Other requirements Comply with the general requirements for granules (Appendix Ⅰ C).

Assay Carry out the method for high performance liquid chromatography (Appendix Ⅵ D)

Chromatographic system and system suitability Use octadecylsilane bonded silica gel as the stationary phase and a mixture of methanol, acetonitrile and 0.025mol/L phosphoric acid (1.8 ml of triethylamine per 1000 ml) (1.5 : 13.5 : 85)

as the mobile phase. As detector a spectrophotometer set at 230nm. The number of theoretical plates of the column is not less than 5000, calculated with the reference to the peak of paeoniflorin.

Reference solution Dissolve a quantity of paeoniflorin CRS, accurately weighed, in methanol to prepare a solution containing 15μg per ml.

Test solution Weigh accurately 5g or 1.7g (without sucrose) of the content, obtained under the test of weight variation and grind to fine powder, place in a conical flask, add 40 ml of methanol, ultrasonicate (power, 250 W; frequency, 33 kHz) for 40 minutes, cool and filter, place the filtrate in a 50 ml volumetric flask, wash the container and the filter apparatus with methanol, combine the washings to the same volumetric flask, dilute to volume with methanol, shake well and filter, use the successive filtrate as the test solution.

Procedure Inject accurately 10 μl of each of the reference solution and the test solution into the column, and calculate the content.

It contains not less than 1.5 mg of paeoniflorin ($C_{23}H_{28}O_{11}$) for strength (1) and (3) and 3.0 mg of paeoniflorin ($C_{23}H_{28}O_{11}$) for strength (2), referred to Radix Paeoniae Rubra.

Action To replenish *qi* and nourish blood, and dredge meridians to promote lactation.

Indications Hypogalactia, agalorrhea, or galactostasis due to insufficiency of *qi* and blood after childbirth.

Usage and dosage 30 g or 10g (without sucrose), 3 times a day.

Strength (1) 15g per bag (2) 30g per bag
(3) 5g per bag (without sucrose)

Storage Preserve in tightly closed containers.

Tongtian Koufuye (通天口服液)

Tongtian Mixture

Ingredients Rhizoma Chuanxiong; Radix Paeoniae Rubra; Rhizoma Gastrodiae; Rhizoma et Radix Notopterygii; Radix Angelicae Dahuricae; Radix et Rhizoma Asari; Flos Chrysanthemi; Herba Menthae; Radix Saposhnikoviae; Tea; Radix et Rhizoma Glycyrrhizae.

Procedure Distill Rhizoma Chuanxiong, Rhizoma et Radix Notopterygii, Radix et Rhizoma Asari, Flos Chrysanthemi, Radix Saposhnikoviae and Herba Menthae with water, collect 800 ml of the distillation, collect the water solution after distillation in a separate container. Decoct the residue and Radix Paeoniae Rubra, Rhizoma Gastrodiae, Radix Angelicae Dahuricae and Radix et Rhizoma Glycyrrhizae twice, 1 hour for each time, combine the decoctions and filter; macerate tea with boiling water for two times, 20 minutes for each time, combine the liquid and filter, add the above filtrate and the water solution after distillation, concentrate in vacuum to a thin extract with a relative density of 1.14 (70℃), stand, allow to cool to room temperature, add ethanol to a content of 70% ethanol, stir thoroughly. Refrigerate for 24 hours, filter, recover the ethanol from the filtrate in vacuum to a thin extract with a relative density of 1.18 (70℃), add the above distillation (increase dissolving with a quantity of polysorbate 80), add water to the volume of 980ml, add 10% solution of sodium hydroxide to adjust to pH 4.5-6.5, add water to the volume of 1000ml, stir well, stand and filter.

Description A brown liquid; odour, aromatic; taste, pungent, slightly bitter and astringent.

Identification (1) Extract 30 ml of the mixture with two 20-ml quantities of ether by shaking, combine the ether extracts (reserve the aqueous layer for latter use), evaporate to dryness, dissolve the residue in 1 ml of ethyl acetate as the test solution. Macerate 1g of Rhizoma Chuanxiong reference drug in ether for 4 hours while shaking frequently, filter, evaporate the filtrate to dryness, dissolve the residue in 2 ml of ethyl acetate as the reference drug solution. Dissolve menthol CRS in ethanol to prepare a solution containing 2 mg per ml as the reference solution. Carry out the method for thin layer chromatography (Appendix Ⅵ B), using silica gel G as the coating substance, and a mixture of *n*-hexane and ethyl acetate (9 : 1) as the mobile phase. Apply separately 5 μl of the test solution and 2 μl of each of the reference drug solution and the reference solutions to the plate. After developing and removal of the plate, dry in air. Examine under ultraviolet light at 365 nm, The fluorescent spot in the chromatogram obtained with the test solution corresponds in position and colour to the spot in the chromatogram obtained with the reference drug solution. Spray with 5% vanillin in sulfuric acid, heat at 105℃ to the spot clear, the spot in the chromatogram obtained with the test solution corresponds in position and colour to the spot in the chromatogram obtained with the reference drug solution and the reference solution.

(2) Extract the aqueous layer obtained under the test of Identification (1), with two 20-ml quantities of *n*-butanol saturated with water by shaking, combine the *n*-butanol extracts, wash with 20 ml of water, separate the *n*-butanol layer, evaporate to dryness, dissolve the residue in 2 ml of methanol as the test solution. Dissolve paeoniflorin CRS in methanol to prepare a solution containing 2 mg per ml as the reference solution. Carry out the method for thin layer chromatography (Appendix Ⅵ B), using silica gel G as the coating substance, and a mixture of chloroform, ethyl acetate, methanol and concentrated ammonia TS (8 : 1 : 4 : 1) as the mobile phase. Apply separately 3 μl of the test solution and the reference solution to the plate. After developing and removal of the plate, dry in air. Spray with 5% vanillin in sulfuric acid, heat at 105℃ to the spot clear, the spot in the chromatogram obtained with the test solution corresponds in position and colour to the spot in the chromatogram obtained with the reference drug solution and the reference solution.

(3) Heat under reflux 0.5g of Radix et Rhizoma Glycyrrhizae reference drug with 10 ml of ethanol for 1 hour, cool and filter. Concentrate the filtrate to 1 ml as the reference drug solution. Carry out the method for thin layer chromatography (Appendix Ⅵ B), using silica gel G as the coating substance, and a mixture of chloroform, methanol and water (40 : 10 : 1) as the mobile phase. Apply separately 5 μl of each of the reference drug solution and the test solution obtained under the test of Identification (2). After developing and removal of the plate, dry in air. Spray with 10% sulfuric acid in ethanol, heat at 105℃ to the spot clear, the main spot in the chromatogram obtained with the test solution corresponds in position and colour to the spot in the chromatogram obtained with the reference drug solution.

Relative density Not less than 1.01 (Appendix Ⅶ A).

pH value 4.5-6.5 (Appendix Ⅶ G).

Other requirements Comply with the general requirements for mixtures. (Appendix Ⅰ J).

Assay Carry out the method for high performance liquid chromatography (Appendix Ⅵ D).

Chromatographic system and system suitability Use octadecylsilane bonded silica gel as the stationary phase and a mixture of methanol and water (30 : 70) as the mobile phase. As detector a spectrophotometer set at 230 nm. The number of theoretical plates of the column is not less than 5000, calculated with the reference to the peak of paeoniflorin.

Reference solution Dissolve a quantity of paeoniflorin CRS, accurately weighed, in dilute ethanol TS to prepare a solution containing 0.1 mg per ml.

Test solution Measure accurately 2 ml of the mixture in a 25 ml volumetric flask, dilute with dilute ethanol TS to the volume and mix well. Centrifuge, use the supernatant as the test solution.

Procedure Inject accurately 10 μl of each of the reference solution and the test solution into the column, and calculate the content.
It contains not less than 0.45 mg of paeoniflorin ($C_{23}H_{28}O_{11}$) per ml, referred to Radix Paeoniae Rubra.

Action To promote blood circulation to resolve stagnated blood, and expel *wind* to kill pain.

Indications Migraine due to stagnated blood and upward attack by *wind* with manifestations of fixed distending pain or stabbing pain in the head with repeated attack, dizziness, or nausea, vomiting and aversion to wind.

Usage and dosage On the first day: Take 10 ml first, then another 10 ml 1 hour, 2 hours and 4 hours later respectively. After take 10 ml every 6 hours. On the second and third day: 10 ml, 3 times a day. Three days make a course of treatment, or follow doctor's advice.

Precaution Contraindicated for patients with hemorrhagic cerebrovascular diseases and those with *yin* deficiency and *yang* hyperactivity, and for pregnant women.

Strength 10 ml per phial

Storage Preserve in tightly closed containers.

Tongxinluo Jiaonang (通心络胶囊)

Tongxinluo Capsules

Ingredients Radix et Rhizoma Ginseng; Hirudo; Scorpio; Radix Paeoniae Rubra; Periostracum Cicadae; Eupolyphaga seu Steleophaga; Scolopendra; Lignum Santali Alba; Lignum Dalbergiae Odoriferae; Olibanum (processed); Semen Ziziphi Spinosae (stir-baked); Borneolum Syntheticum.

Proceduce Distill the volatile oil of Lignum Santali Alba and Lignum Dalbergiae Odoriferae and remain the residue and the water solution for later use. Heat Radix et Rhizoma Ginseng with 70% ethanol twice under reflux, 3 hours for the first and 2 hours for the second time, combine the extracts and recover ethanol. Combine the residue of Radix Ginseng and the residues and water solutions of Lignum Santali Alba and Lignum Dalbergiae Odoriferae, add Radix Paeoniae Rubra and Semen Ziziphi Spinosae, decoct 2 times, 3 hours for the first and 2 hours for the second time. Combine the decoctions, filter, concentrate the filtrate to a thin extract with a relative density of 1.20-1.25 (60℃). mix well with the above extract of Radix Ginseng, dry at a lower temperature and pulverize to fine powder. Wash clean Hirudo, Scorpio, Periostracum Cicadae, Eupolyphaga seu Steleophaga and Scolopendra, dry in oven at a lower temperature, and triturate with Olibanum to fine powder. Grind Borneolum Syntheticum to fine powder, triturate with the above two fine powders respectively, mix well, spray the volatile oil, mix thoroughly, pack into 1000 capsules.

Description Hard capsules with brown powdered content; odour, aromatic, slightly stinking; taste, slightly salty and bitter.

Identification (1) Microscopical: Fragments of the body walls pale yellow to yellow, with reticulate striations and rounded seta pits, sometimes brown setae visible. Fragments of trachea walls with brown or yellowish-green helical filaments, 1-5 μm wide, with almost colourless punctiform masses between filaments. Fragments of chitinous shells pale yellowish-brown, translucent, densely covered with papillose or short spine bulge. Fragments of the body wall yellow or brownish-red, with rounded seta pits, 8-24 μm in diameter, seta in varying length often visible. Oblique striated muscle fibres usually colourless, separated or jointed, 10-40 μm in diameter, mostly uneven in margins, sometimes partly inflated.
(2) Ultrasonicate the content of 15 capsules with 30 ml of ethanol for 15 minutes, filter, evaporate the filtrate to dryness, wash the residue with two 5-ml quantities of ether, discard ether washings, and expel ether. Dissolve the residue in a quantity of water, apply to a column packed with D101 macroporous absorption resin (2 cm in inner diameter, 12 cm in length, pre-eluted with ethanol and water stepwisely), elute with 100 ml of water and discard the water eluate. Elute with 80 ml of 70% ethanol, and collect the 70% ethanol eluate and evaporate to dryness. Dissolve the residue in 1 ml of ethanol as the test solution. Dissolve ginsenosides Rb_1 CRS, Re CRS, Rg_1 CRS in ethanol to prepare a mixture containing 1 mg each per ml as the reference solution. Carry out the method for thin layer chromatography (Appendix Ⅵ B), using silica gel G as the coating substance and the lower layer of a mixture of chloroform, ethyl acetate, methanol and water (15 : 40 : 22 : 10), stand below 10℃ for overnight, as the mobile phase. Apply separately 5 μl of each of the two solutions to the plate, After developing and removal of the plate, dry in air, spray with 2% solution of vanillin of sulfuric acid in ethanol (add slowly 50 ml of sulfuric acid to 25 ml of water, allow to cool, add 25 ml of ethanol and shake well, then mix well with 25 ml of 10% solution of vanillin in dehydrated ethanol. The solution should be freshly prepared), heat at 105℃ to the spots clear. The spots in the chromatogram obtained with the test solution correspond in position and colour to the spots in the chromatogram obtained with the reference solution.
(3) Dissolve paeoniflorin CRS in ethanol to prepare a solution containing 1 mg per ml as the reference solution. Carry out the method for thin layer chromatography (Appendix Ⅵ B), using silica gel G as the coating substance and a mixture of chloroform, ethyl acetate, methanol and silica gel G as the coating substance and a mixture of chloroform, ethyl acetate, methanol and formic acid (40 : 5 : 10 : 0.2) as the mobile phase. Apply separately 5 μl of each of the test solution obtained under the test of Identification (2) and the reference solution to the plate. After developing and removal of the plate, dry in air, spray with a 2% solution of vanillin of sulfuric acid in ethanol, heat at 105℃ to the spots clear. The spot in the chromatogram obtained with the test solution corresponds in position and colour to the spot in the chromatogram obtained with the reference solution.
(4) Shake the content of 1 capsule with 3 ml of ethanol for 3 minutes, allow to stand, and use the supernatant as the test solution. Dissolve a mixture of (±) borneol and (±) isoborneol CRS in ethanol to prepare a solution containing 1 mg per ml as the reference solution. Carry out the method for thin layer chromatography (Appendix Ⅵ B), using silica gel G as the coating substance and a mixture of toluene and acetone

(9 : 1) as the mobile phase. Apply separately 5 μl of each of the two solutions to the plate. After developing and removal of the plate, dry in air, spray with a 2% solution of vanillin of sulfuric acid in ethanol, heat to the spots clear. The spot in the chromatogram obtained with the test solution corresponds in position and colour to the spot in the chromatogram obtained with the reference solution.

Other requirements Comply with the general requirements for capsules (Appendix Ⅰ L).

Assay Carry out the method for high performance liquid chromatography (Appendix Ⅵ D).

Chromatographic system and system suitability Use the octadecylsilance bonded silica gel as the stationary phase and a mixture of acetonitrile and water (12 : 88) as the mobile phase. As detector a spectrophotometer set at 230 nm. The number of theoretical plates of the column is not less than 3000, calculated with the reference to the peak of paeoniflorin.

Reference solution Weigh accurately 10 mg of paeoniflorin CRS, in a 100 ml volumetric flask, add methanol to dissolve and dilute to volume, and shake well. Measure accurately 5 ml into a 50 ml volumetric flask, dilute with 70% methanol to volume, and mix well (containing 10 μg of paeoniflorin per ml).

Test solution Grind well the content of capsules, obtained under the test of weight variation, weigh accurately 0.25 g in a stopper conical flask, add 25 ml of 70% methanol, stopper tightly, weigh and ultrasonicate (power, 250 W; frequency, 40 kHz) for 50 minutes, allow to cool, weigh again, replenish the loss of the weight with 70% methanol, shake well, and filter. Measure accurately 10 ml of the successive filtrate in a 25 ml volumetric flask, dilute with 70% methanol to volume, shake well, filter and use the successive filtrate as the test solution.

Procedure Inject accurately 10 μl of each of the reference solution and the test solution into the column, respectively, calculate the content.

It contains not less than 0.77 mg of paeoniflorin ($C_{23}H_{28}O_{11}$) per capsule, referred to Radix Paeoniae Rubra.

Action To replenish *qi* and promote blood circulation, and dredge meridians to kill pain.

Indications Angina pectoris in coronary heart disease caused by a deficiency of *heart-qi* and blockage of meridians by stagnated blood with manifestations of constriction, fixed stabbing or colic pain in the chest, palpitation, spontaneous sweating, shortness of breath, lassitude, dark purple tongue or ecchymosis, thready and unsmooth pulse or knotted and intermittent pulse; stroke due to a deficiency of *qi* and stagnated blood blocking meridians with manifestations of hemiplegia or numbness of one side of the body, deviated mouth and tongue and dysphasia.

Usage and dosage 2-4 capsules, 3 times a day.

Precaution Contraindicated for patients with hemorrhage, pregnant women and women during periods, and stroke patients from *yin* deficiency and *fire* hyperactivity.

Strength 0.38 g per capsule

Storage Preserve in tightly closed containers.

Tongxuan Lifei Wan
(通宣理肺丸)

Tongxuan Lifei Pills

Ingredients Folium Perillae 144 g; Radix Peucedani 96 g; Radix Platycodonis 96 g; Semen Armeniacae Amarum 72 g; Herba Ephedrae 96 g; Radix et Rhizoma Glycyrrhizae 72 g; Pericarpium Citri Reticulatae 96 g; Rhizoma Pinelliae (processed) 72 g; Poria 96 g; Fructus Aurantii (stir-baked) 96 g; Radix Scutellariae 96 g.

Procedure Pulverize the above eleven ingredients to fine powder, sift, mix thoroughly. To each 100 g of the powder add 35-45 g of refined honey and a quantity of water to make water-honeyed pills and dry; or add 130-160 g of refined honey to make big honeyed pills.

Description Blackish-brown water-honeyed pills or big honeyed pills; taste, slightly sweet and bitter.

Identification (1) Microscopical: Irregular branched masses colourless, dissolved in chloral hydrate solution; hyphae colourless or pale brown, 4-6 μm in diameter. Fibres pale yellow, fusiform, walls thickened, pit-canals fine. Fibre bundles surrounded by parenchymatous cells containing prisms of calcium oxalate, forming crystal fibres. Stomata characteristic, guard cells dumbbell-like in lateral view. Prisms of calcium oxalate abundant in parenchyma. Needle crystals of calcium oxalate in bundles, 32-144 μm long, occurring in mucilage cells or scattered. Stone cells orange-yellow, conchoidal, walls relatively thickened, pits distinct on the wider side. Anastomosing laticiferous tubes 14-25 μm in diameter, containing pale yellow granules. Vittae containing golden yellow secretion. Mesophyll containing fine clusters of calcium oxalate, 4-8 μm in diameter.

(2) Grind 4 g of water-honeyed pills, or triturate 6 g of big honeyed pills thoroughly with 5 g of kieselguhr, to fine powder and sift through No. 3 sieve. Transfer the mixture to a 50 ml conical flask, add 20 ml of ether and 1 ml of concentrated ammonia TS, stopper tightly, allow to stand for 2 hours, shake frequently and filter. Wash the residue with three 15-ml quantities of ether, filter. Combine the filtrates, add 1 ml of hydrochloric acid in ethanol (1→20), mix well and evaporate to dryness. Dissolve the residue in 2 ml of methanol, filter, use the filtrate as the test solution. Dissolve ephedrine hydrochloride CRS in methanol to prepare a solution containing 1 mg per ml as the reference solution. Carry out the method for thin layer chromatography (Appendix Ⅵ B), using silica gel G as the coating substance and a mixture of chloroform, methanol and concentrated ammoina TS (40 : 7 : 1) as the mobile phase. Apply separately to the plate 10 μl of each of the two solutions. After developing and removal of the plate, dry in air, and spray with ninhydrine TS and heat at 105℃ to the spots clear. The spot in the chromatogram obtained with the test solution corresponds in position and colour to the spot in the chromatogram obtained with the reference solution.

(3) Grind 6 g of water-honeyed pills, or 12 g of big honeyed pills with 20 ml of water. Transfer to a 500 ml round-bottom flask, add 230 ml of water and several glass beads, shake thoroughly. Connect with the apparatus for the determination of volatile oils, add water from the top of the apparatus to volume until the water overflows into the flask. Add 1.5 ml of petroleum ether (60-90℃), connect with condenser and boil gently for 2 hours, allow to cool, use the petroleum ether layer as the test solution. Place 0.7 g of Folium Perillae reference drug to a 500 ml round-bottom flask, add 250 ml of water and several glass beads to prepare a reference drug solution in the same manner. Carry out the method for thin layer chromatography (Appendix Ⅵ B), using silica gel G as the coating substance and a mixture of petroleum ether (60-90℃) and ethyl acetate (19 : 1) as the mobile phase. Apply separately to the plate 10 μl of each of the two solutions, after developing and removal of the plate, dry in air and spray with 5% solution of vanillin in hydrochloric acid, heat at 105 ℃ for 5 minutes, take it out immediately. The spots in the chromatogram obtained with the test

solution correspond in position and colour to the spots in the chromatogram obtained with the reference drug solution.
(4) Grind 4 g of water-honeyed pills or 6 g of big honeyed pills to powder, mix thoroughly with 4 g of kieselguhr to fine powder and sift through No. 3 sieve. Transfer to a conical flask, add 15 ml of methanol, shake for 30 minutes, filter, use the supernatant as the test solution. Dissolve baicalin CRS in methanol to prepare a solution containing 1 mg per ml as the reference solution. Carry out the method for thin layer chromatography (Appendix Ⅵ B), using silica gel G as the coating substance and the upper layer of ethyl acetate, butanone, acetic acid and water (10 : 7 : 5 : 3) as the mobile phase. Apply separately to the plate 5 μl of each of the two solutions. After developing and removal of the plate, dry in air, and spray with 1% ferric chloride in ethanol. The spot in the chromatogram obtained with the test solution corresponds in position and colour to the spot in the chromatogram obtained with the reference solution.

Other requirements Comply with the general requirements for pills (Appendix Ⅰ A).

Assay Carry out the method for high performance liquid chromatography (Appendix Ⅵ D).

Chromatographic system and system suitability Use octadecylsilane bonded silica gel as the stationary phase, and a mixture of acetonitrile and 0.02 mol/L solution of potassium dihydrogen phosphate (containing 0.2% triethylamine, and adjust to pH 2.7 with phosphoric acid) (3 : 97) as the mobile phase. As detector a spectrophotometer set at 210 nm. The number of theoretical plates of the column is not less than 3000, calculated with the reference to the peak of ephedrin hydrochloride.

Reference solution Weigh accurately a quantity of ephedrin hydrochloride CRS, dissolve in a solution of hydrochloric acid in methanol (1→1000) to prepare a solution containing 60 μg per ml.

Test solution Triturate the water-honeyed pills or big honeyed pills, obtained under the test of weight variation, to fine powder, weigh accurately 2 g, add 2 g of kieselguhr, grind to mix well, and place to a Soxhlet's extractor, and 3 ml of concentrated ammonia TS, 10 ml of ethanol, and a quantity of ether, extract under reflux until the extract is colourless, cool. Filter and transfer the ether extract to an evaporating dish, wash the filter paper and apparatus with ether, combine ether washings to the evaporating dish, expel the ether. Dissolve the residue in a solution of hydrochloric acid in methanol (1→1000), and transfer to a 10 ml of volumetric flask, add a solution of hydrochloric acid in methanol (1→1000) to volume, mix well and filter. Discard the initial filtrate, and use the successive filtrate as the test solution.

Procedure Inject accurately 10 μl of each of the reference solution and the test solution into the column respectively and calculate.
It contains not less than 0.30 mg of ephedrine hydrochloride ($C_{10}H_{15}NO \cdot HCl$) per gram of water-honeyed pills and 1.2 mg per pill of big honeyed pills, referred to Herba Ephedrae.

Action To release the exterior to disperse *cold*, and disseminate *lung-qi* and stop coughing.

Indications Common cold with coughing due to affliction from external *wind-cold* and failure of dissemination of *lung-qi*, with manifestations of fever, aversion to cold, coughing, stuffy nose and running nose, headache, absence of sweating and aching pain of limbs.

Usage and dosage 7 g of water-honeyed pills; 2 big honeyed pills, 2-3 times a day.

Strength 10 g per 100 water-honeyed pills; 6 g per big honeyed pill

Storage Preserve in tightly closed containers.

Unguentum Erodii seu Geranii (老鹳草软膏, Laoguancao Ruangao)

Common Heron's Bill Ointment

Common Heron's Bill ointment is prepared from Herba Erodii seu Geranii.

Procedure Decoct 1000 g of Herba Erodii seu Geranii with water twice, 1 hour for each time. Combine the decoctions, filter, concentrate the filtrate and add equal volume of ethanol to precipitate. Allow to stand for 12-24 hours, filter the supernatant and concentrate to an extract with a relative density of 1.20. Add 0.3 g of ethyl *p*-hydroxybenzoate, 50 g of wool fat and a quantity of vaselin, mix thoroughly and make up to 1000 g.

Description A brownish-purple ointment.

Identification Dissolve with stirring 5 g in 10 ml of ethanol on a water bath, cool and filter to remove the solidified vaselin. To 1 ml of the filtrate, add 1 to 2 drops of ferric chloride TS; an dark blue colour is produced, which turns to bluish-black on standing. To another 2 ml of the filtrate add 0.25% cupric sulfate solution; a white precipitate is produced. To another 2 ml of the filtrate add calcium chloride TS; a white precipitate is produced.

Other requirements Comply with the general requirements for ointments (Appendix Ⅰ R).

Action To remove *dampness* and clear *toxicity*, and promote healing and regeneration of tissues.

Indications Eczema, abscess, furuncle, sore, boil due to retention of *dampness*, or burn and scald of small area.

Usage and dosage For external use, applied topically, once a day.

Storage Preserve in tightly closed containers.

Wanshi Niuhuang Qingxin Wan (万氏牛黄清心丸)

Wanshi Niuhuang Qingxin Pills

Ingredients Calculus Bovis 10 g; Cinnabaris 60 g; Rhizoma Coptidis 200 g; Radix Scutellariae 120 g; Radix Curcumae 80 g; Fructus Gardeniae 120 g.

Procedure Levigate Cinnabaris to very fine powder, and pulverize Rhizoma Coptidis, Radix Scutellariae, Fructus Gardeniae and Radix Curcumae to fine powder. Triturate Calculus Bovis with the other five ingredients, sift and mix well. To each 100 g of the powder add 100-120 g of refined honey to make big honeyed pills.

Description Reddish-brown to brown big honeyed pills; odour, characteristic; taste, sweet, slightly astringent and bitter.

Identification (1) Microscopical: Masses of gelatinized starch granules almost colourless. Stone cells of testa yellow or brownish, mostly broken, when whole, long polygonal, rectangular or irregular, walls thickened, with large rounded pits, the lumina containing brownish-red contents phloem fibres pale yellow, fusiform with thickened walls and fine

pit-canals. Fibre bundles bright yellow, with slighly thickened walls and distinct pits. Irregular minute granules dark brown, lustrous, and with dark black edges.

(2) Grind 3 g with a quantity of water, wash with water in portions, to remove the suspended matter until a small quantity of vermilion precipitate is obtained. To the precipitate add 1 ml of hydrochloric acid and a copper plate, and heat to boil; the colour of copper plate turns from yellow to silver-white.

(3) Mix well 3 g, in pieces, with 0.6 g of kieselguhr. Heat under reflux with 10 ml of chloroform and 0.5 ml of glacial acetic acid for half an hour, cool, filter and evaporate the filtrate to dryness. Dissolve the residue in 2 ml of ethanol, filter and use the filtrate as the test solution. Dissolve cholic acid CRS in ethanol to prepare a solution containing 1 mg per ml as the reference solution. Carry out the method for thin layer chromatography (Appendix Ⅵ B), using silica gel G mixed with sodium carboxymethylcellulose as the coating substance and a mixture of ethyl acetate, *n*-hexane, acetic acid and methanol (32 : 6 : 1 : 1) as the mobile phase. Apply separately to the plate 10 μl of each of the two solutions. After developing and removal of the plate, dry in air, spray with 10% phosphomolybdic acid in ethanol and heat at 110℃ for 10 minutes. The spot in the chromatogram obtained with the test solution corresponds in position and colour to the spot in the chromatogram obtained with the reference solution.

(4) Mix well 3 g, in pieces, with 0.5 g of kieselguhr. Heat under reflux with 20 ml of methanol for 1 hour, cool, filter and use the filtrate as the test solution. Dissolve baicalin CRS in methanol to prepare a solution containing 1 mg per ml as the reference solution. Carry out the method for thin layer chromatography (Appendix Ⅵ B), using silica gel G mixed with sodium carboxymethylcellulose containing 4% solution of sodium acetate as the coating substance, and a mixture of ethyl acetate, butanone, formic acid and water (5 : 3 : 1 : 1) as the mobile phase. Apply separately to the plate 5 μl each of the two solutions. After developing and removal of the plate, dry in air and spray with 2% ferric chloride in ethanol. The spot in the chromatogram obtained with the test solution corresponds in position and colour to the spot in the chromatogram obtained with the reference solution.

(5) Grind 3 g with 15 ml of ether, discard the ether solution and expel the ether from drug residue. To the drug residue add 30 ml of ethyl acetate, heat under reflux for 1 hour, cool, filter and evaporate to dryness. Dissolve the residue in 3 ml of methanol, filter and use the filtrate as the test solution. Dissolve geniposide CRS in methanol to prepare a solution containing 1 mg per ml as the reference solution. Carry out the method for thin layer chromatography (Appendix Ⅵ B), using silica gel G as the coating substance and a mixture of ethyl acetate, acetone, formic acid and water (10 : 7 : 2 : 0.5) as the mobile phase. Apply separately to the plate 5 μl of each of the two solutions. After developing and removal of the plate, dry in air, spray with 10% sulfuric acid in ethanol and heat at 105 ℃ for 10 minutes. The spot in the chromatogram obtained with the test solution corresponds in position and colour to the spot in the chromatogram obtained with the reference solution.

(6) Extract 50 mg of Rhizoma Coptidis reference drug with 10 ml of methanol by heating under reflux on a water bath for 15 minutes, filter and evaporate to dryness. Dissolve the residue in 1 ml of methanol as the reference drug solution. Dissolve berberine hydrochloride CRS in methanol to prepare a solution containing 0.5 mg per ml as the reference solution. Carry out the method for thin layer chromatography (Appendix Ⅵ B), using silica gel G as the coating substance and a mixture of benzene, ethyl acetate, methanol, isopropanol and concentrated ammonium TS (12 : 6 : 3 : 3 : 1) as the mobile phase. Apply separately to the plate 2 μl of each of the remained extract obtained under the Assay for Rhizoma Coptidis and the above two solutions. After developing and removal of the plate, dry in air and examine under ultraviolet light at 365 nm. The yellow fluorescent spots in the chromatogram obtained with the test solution correspond in position and colour to the spots in the chromatograms obtained with the reference drug solution and the reference solution.

Other requirements Comply with the general requirements for pills (Appendix Ⅰ A).

Assay ***Cinnabaris*** Weigh accurately 5 g, obtained under the test of weight variation and cut into pieces, into a 250 ml Kjeldahl's flask, add 30 ml of sulfuric acid and 8 g of potassium nitrate, heat until the solution becomes nearly colourless and cool. Transfer the solution to a 250 ml conical flask, wash the Kjeldahl's flask with 50 ml of water in protions. Combine the washings with the solution, add a 1% solution of potassium permanganate until a pink colour is produced and not faded within 2 minutes. Add dropwise a 2% solution of ferrous sulfate until the pink colour disappears, add 2 ml of ammonium ferric sulfate IS, titrate with ammonium thiocyanate (0.1 mol/L) VS. Each ml of ammonium thiocyanate (0.1 mol/L) VS is equivalent to 11.63 mg of HgS.

It contains not less than 69 mg and not more than 90 mg of HgS per small pill, or not less than 138 mg and not more than 180 mg of HgS per big pill, referred to Cinnabaris.

Rhizoma Coptidis Cut a quantity of the pills, obtained under the test of weight variation, into pieces, weigh accurately a quantity, add accurately the same amount of kieselguhr and grind well. Weigh accurately 1.6 g in a Soxhlet's extractor, and heat under reflux with a quantity of a mixture of hydrochloric acid and methanol (1 : 100) until the extract colourless. Transfer the extract to a 100 ml volumetric flask, wash the container with the same mixture, combine the washings into the same volumetric flask, dilute with the mixture to volume and shake well. Measure accurately 10 ml to a 50 ml volumetric flask, dilute with methanol to volume, shake well as the test solution. Dissolve a quantiy of berberine hydrochoride CRS, weighed accurately, in methanol to prepare a solution containing 0.02 mg per ml as the reference solution. Carry out the method for thin layer chromatography (Appendix Ⅵ B). Using silica gel G as the coating substance and a mixture of benzene, ethyl acetate, methanol, isopropanol and water (4 : 2 : 1 : 1 : 0.2) as the mobile phase. Apply separately 4 μl of the test solution, 2 μl and 6 μl of the reference solution to the plate, alternately. Pre-equilibrate with concentrate ammonia TS in another slot, for 15 minutes, After developing and removal of the plate, and dry in air. Carry out the method for thin layer chromatography (Appendix Ⅵ B, thin layer chromatographic scanning method), scan with fluorescence mode at the wavelength of $\lambda = 366$ nm. Measure the integration values of the fluorescent absorbance of the test solution and the reference solution, respectively, and calculate the content.

It contains not less than 7.5 mg per small pill, 15.0 mg per big pill, of berberine hydrochloride ($C_{20}H_{18}ClNO_4$), referred to Rhizoma Coptidis.

Action To clear *heat* and *toxins*, relieve convulsion and anchor the mind.

Indications Invasion of the pericardium by *heat* and stirring of *wind* by intense *heat*, with manifestations of high fever, restlessness, coma, delirium or child convulsion due to high fever.

Usage and dosage 2 small pills or 1 big pills, 2-3 times a day.

Precaution Be cautious about pregnant women.

Strength (1) 1.5 g per small pill (2) 3 g per big pill

Storage Preserve in tightly closed containers.

Wantong Yankang Pian (万通炎康片)

Wantong Yankang Tablets

Ingredients Herba Picriae; Herba Sarcandrae.

Procedure Decoct the above two ingredients with water twice, 2 hours for each. Combine the decoctions, and filter. Concentrate the filtrate to a thin extract with a relative density of 1.10-1.15 (75℃), allow to cool, add three times quantity of ethanol and mix well. Allow to stand for 24 hours, separate the supernatant and recover ethanol, concentrate to a thin extract with a relative density of 1.10-1.20 (70℃), make granules with a quantity of excipients, dry, compress into 1000 tablets (big tablets) or 1500 tablets (small tablets), coat with film; or compress into 3000 tablets, and coat with sugar.

Description Film coated tablets or sugar coated tablets with yellowish-brown to brown core; taste, bitter.

Identification (1) To 10 tablets of sugar coated tablets, or 3 tablets of big film coated tablets, or 5 tablets of small film coated tablets, removed the coats, and pulverize to fine powder. Triturate with 5 ml of 70% ethanol, filter, evaporate the filtrate to dryness, dissolve the residue in 5 ml of water and filter. Extract the filtrate with two 5-ml quantities of petroleum ether (60-90℃) by shaking, discard the petroleum ether extracts, add 1 drop of dilute hydrochloric acid to the water layer and 5 ml of ethyl acetate, extract by shaking. Separate the ethyl acetate layer, concentrate to 1 ml as the test solution. Decoct 5 g of Herba Sarcandrae reference drug with water for 1 hour, filter, concentrate the filtrate to about 5ml, add 15 ml of ethanol, mix well and filter. Evaporate the filtrate to dryness, dissolve the residue in 5 ml of water, carry out the procedure as described under the test solution, beginning at the words "Extract the filtrate with two 5-ml quantities of petroleum ether (60-90℃)" to prepare a solution as the reference drug solution. Carry out the method for thin layer chromatography (Appendix Ⅵ B), using silica gel G mixed with sodium carboxymethylcellulose as the coating substance and a mixture of benzene, chloroform, and methanol (4 : 6 : 1) as the mobile phase. Apply separately 5-10 μl of each of the test solution and the reference drug solution to the plate. After developing and removing the plate, dry in air. Spray with a mixture of 2% potassium ferricyanide and 2% ferric chlorid (1 : 1) (freshly prepared). The spots in the chromatography obtained with the test solution correspond in position and colour to the spots in the chromatography obtained with the reference drug solution.

(2) To 5 g of Herba Picriae reference drug, carry out the procedure as described under the reference drug solution of Identification (1) to prepare a solution as the reference drug solution. Carry out the method for thin layer chromatography (Appendix Ⅵ B). using silica gel G mixed with sodium carboxymethylcellulose as the coating substance and a mixture of chloroform and methanol (4 : 1) as the mobile phase. Apply separately 5-10 μl of each of the test solution obtained under the test of Identification (1) and the reference drug solution to the plate. After developing and removing the plate, dry in air. Spray with 1% vanillin in sulfuric acid, and heat at 105℃ to spots clear. The spots in the chromatography obtained with the test solution correspond in position and colour to the spots in the chromatography obtained with the reference drug solution.

Other requirements Comply to the general requirements for tablets (Appendix Ⅰ D).

Assay Carry out the method for high performance liquid chromatography (Appendix Ⅵ D).

Chromatographic system and system suitability Use octadecylsilane bonded silica gel as the stationary phase and a mixture of acetonitrile and 0.1% phosphoric acid (25 : 75) as the mobile phase. As detector a spectrophotometer set at 344 nm. The number of theoretical plates of the column is not less than 3500, calculated with the reference to the peak of isofraxidin.

Reference solution Weigh accurately a quantity of isofraxidin CRS, dissolve in methanol to prepare a reference solution containing 20 μg per ml.

Test solution To 20 tablets removed the coats, weigh accurately, pulverize to fine powder, weigh accurately 2 g (sugar coated tablets) or 1 g (film coated tablets) to a stopper conical flask, add 20 ml of water, ultrasonicate (power, 250 W; frequency, 33 kHz) for 20 minutes. Filter, wash the container and the filter with a small quantity of water, and combine the washings with the filtrate. Extract by shaking with five 10-ml quantities of chloroform, combine the chloroform extracts, and evaporate to dryness. Dissolve the residue in methanol, transfer to a 25 ml volumetric flask, dilute to volume with methanol, mix well, filter, and use the successive filtrate as the test solution.

Procedure Inject accurately 10 μl of each of the reference solution and the test solution into the column, respectively, and calculate the content.

It contains not less than 40 μg of isofraxidin ($C_{11}H_{10}O_5$) for each sugar coated tablets, 120 μg for each big film coated tablets, and 80 μg for each small film coated tablets.

Action To dispel *wind* and clear *heat*, and relieve *toxicity* and reduce swelling.

Indications Red swollen throat or gums, or carbuncles due to affliction from external *wind-heat*; acute and chronic pharyngitis, tonsillitis, gingivitis, sores and boils with above symptoms.

Usage and dosage Film coated tablets: 3 tablets for small tablets, 4 tablets in serious cases, 3 times a day; 2 tablets for big tablets, 3 tablets in serious cases, 3 times a day. Sugar coated tablets : 6 tablets, 9 tablets in serious cases, 3 times a day; appropriate reduction of the dosage for children.

Strength (1) 0.35 g for each big film coated tablets
(2) 0.24 g for each small film coated tablets

Storage Preserve in tightly closed containers.

Wanying Ding (万应锭)

Wanying Troches

Ingredients Rhizoma Picrorhizae 100 g; Rhizoma Coptidis 100 g; Catechu 100 g; Borneolum Syntheticum 6 g; Chinese Ink 200 g; Pulvis Fel Ursi 20 g; Moschus 5 g; Calculus Bovis 5 g; Fel Bovis 160 g.

Procedure Pulverize Rhizoma Picrorhizae, Rhizoma Coptidis, Catechu and Chinese Ink to fine powder. Triturate Calculus Bovis, Boneolum Syntheticum and Moschus to fine powder,

triturate with the above powder, sift and mix well. Dissolve Fel Ursi in a quantity of warm water. Concentrate Pulvis Fel Bovis to a quantity, filter and mix with Fel Ursi solution, then mix with the above powder to make troches and dry at a lower temperature.

Description Black and bright spheroidal troches; odour, aromatic; taste, bitter, with cooling sensation.

Identification (1) Microscopical: Fibre bundles bright yellow, with slightly thickened walls and distinct pits. Irregular masses brownish-black or black. Crystals of sublimate pale yellowish-green, in needles, needle-clusters or long plates.
(2) Sublime 0.15 g, in fine powder, observe the sublimates under microscope: Colourless irregular plate crystals are visible, which turn to purpled colour on adding 1 drop of freshly prepared 1% vanillin in sulfuric acid.
(3) Macerate warmly 6 g, in pieces, in 20 ml of methanol on a water bath for 1 hour and filter. Evaporate 10 ml of the filtrate to dryness, dissolve the residue in 5 ml of 5% sodium hydroxide solution and heat on a water bath for 8 hours. Cool, add hydrochloric acid to adjust to pH 2-3, add 10 ml of water, mix well, and extract with two 30-ml quantities of ether. Combine the ether extracts and evaporate to dryness. Dissolve the residue in 1 ml of methanol as the test solution. Dissolve separately ursodesoxycholic acid CRS, cholic acid CRS, deoxycholic acid CRS in methanol to produce solutions containing 1 mg per ml respectively as the reference solutions. Carry out the method for thin layer chromatography (Appendix Ⅵ B), using silica gel G as the coating substance and a mixture of isooctane, ethyl acetate and glacial acetic acid (15 : 7 : 5) as the mobile phase. Apply separately to the plate 2 μl of each of the four solutions. After developing to a distance of 18 cm at a relative humidity below 40%, and removal of the plate, dry in air, spray with sulfuric acid in ethanol (1→10), and heat at 110℃ for several minutes. The spots in the chromatogram obtained with the test solution correspond in position and colour to the spots in chromatogram obtained with the reference solutions. Examine under ultraviolet light at 365 nm, the fluorescent spots in the chromatogram obtained with the test solution correspond in position and colour to the fluorescent spots in the chromatogram obtained with the reference solutions.
(4) Dilute 5 ml of the remains of methanol filtrate obtained in the test for Identification (3) with methanol to 10 ml as the test solution. Prepare a solution with 50 mg of Rhizoma Coptidis reference drug in 5 ml of methanol as the reference drug solution in the same manner. Dissolve berberine hydrochloride CRS in methanol to produce a solution containing 1 mg per ml as the reference solution. Carry out the method for thin layer chromatography (Appendix Ⅵ B), using silica gel G as the coating substance and a mixture of benzene, ethyl acetate, methanol, isopropanol and concentrated ammonia TS (12 : 6 : 3 : 3 : 1) as the mobile phase. Apply separately to the plate 2 μl of each of the three solutions and place the plate in a chamber pre-equilibrated with ammonia vapour. After developing and removal of the plate, dry in air and examine under ultraviolet light at 365 nm. The yellow fluorescent spots in the chromatogram obtained with the test solution correspond in position and colour to the spots in the chromatogram obtained with the reference drug solution and the reference solution.

Other requirements Comply with the general requirements for troches (Appendix Ⅰ E).

Action To clear *heat* and toxic materials, and relieve convulsion.

Indications Sores on the mouth and tongue, or swollen painful gums and throat, or high fever in children, irritability and proneness to convulsion due to abundant toxic materials in the interior.

Usage and dosage 2-4 troches, twice a day; appropriate reduction of the dosage for children under 3 years of age.

Precaution Be cautious about pregnant women.

Strength 1.5 g per 10 troches

Storage Preserve in tightly closed containers.

Wanying Jiaonang
(万应胶囊)

Wanying Capsules

Ingredients Rhizoma Picrorhizae 60 g; Rhizoma Coptidis 60 g; Catechu 60 g; Borneolum Syntheticum 3.6 g; Chinese Ink 120 g; Fel Ursi 12 g; Moschus 5 g; Calculus Bovis Artifactus 3 g; Fel Bovis 96 g.

Procedure Pulverize Rhizoma Picrorhizae, Rhizoma Coptidis, Catechu, and Chinese Ink to fine powder, mix thoroughly with Calculus Bovis Artifactus. Dissolve Fel Ursi in a quantity of warm water, concentrate Fel Bovis to a quantity and filter, mix with Fel Ursi, add to the above powder, mix well, make granules. Pulverize Borneolum Syntheticum and Moschus to fine powder, mix thoroughly with the above granules, make 1000 granules (0.3 g) or 2000 granules (0.15 g).

Description Capsules, containing black or dark green granules and powder; odour, aromatic; taste, bitter, and cool.

Identification (1) Pulverize 1.8 g of the contents to fine powder, add 20 ml of ether, heat under reflux on a water bath for 1 hour. Filter, evaporate the filtrate to dryness, and dissolve the residue in 1 ml of chloroform as the test solution. Dissolve vanillic acid CRS in methanol to produce a mixture containing 1 mg per ml as the reference solution. Carry out the method for thin layer chromatography (Appendix Ⅵ B), using silica gel GF_{254} as the coating substance and a mixture of *n*-hexane, ether, and formic acid (12 : 8 : 1) as the mobile phase. Apply separately 10 μl of each of the test solution and 5 μl of the reference solution to the plate. After developing and removing the plate, dry in air, and examine under ultraviolet light at 254 nm. The spot in the chromatography obtained with the test solution corresponds in position and colour to the spot in the chromatography obtained with the reference solution.
(2) Pulverize 1 g of the contents to fine powder, add 20 ml of methanol, ultrasonicate for 20 minutes, filter, and use the filtrate as the test solution. To 50 mg of Rhizoma Coptidis reference drug, add 5 ml of methanol, heat under reflux for 15 minutes, filter, use the filtrate as the reference drug solution. Dissolve berberine hydrochloride CRS in methanol to produce a solution containing 1 mg per ml as the reference solution. Carry out the method for thin layer chromatography (Appendix Ⅵ B), using silica gel G as the coating substance and a mixture of benzene, ethyl acetate, methanol, isopropanol, and concentrated ammonia TS (12 : 6 : 3 : 3 : 1) as the mobile phase. Apply separately 1 μl of each of the reference solution, the reference drug solution, and the test solution to the plate. After developing in a chamber pre-equilibrated with concentrated ammonia vapour, remove the plate and dry in air, and examine under ultraviolet light at 365 nm. The fluorescent spots in the chromatogram obtained with the test solution correspond in position and colour to the spots in chromatogram obtained with the reference solution and the reference drug solution.

(3) Pulverize 0.5 g of the contents to fine powder, add 20 ml of ether, well stopper, macerate for 1 hour, and filter. Evaporate the filtrate to dryness, dissolve the residue in 1 ml of ethanol as the test solution. Dissolve a mixture of (±)-borneol and (±)-isoborneol CRS in ethanol to produce a solution containing 1 mg per ml as the reference solution. Carry out the method for thin layer chromatography (Appendix Ⅵ B), using silica gel G as the coating substance and a mixture of petroleum ether (60-90℃), benzene, and ethyl acetate (9 : 4 : 2) as the mobile phase. Apply separately to the plate 5 μl of the test solution and 2 μl of the reference solution. After developing and removing the plate, dry in air. Spray with 10% vanillin in sulfuric acid, heat at 105℃ to the spots clear. The spot in the chromatography obtained with the test solution corresponds in position and colour to the spot in the chromatography obtained with the reference solution.

(4) Evaporate the test solution, obtained under the Identification (1), to dryness, dissolve the residue in 5 ml of 10% solution of sodium hydroxide, heat under reflux on a water bath for 5 hours. Allow to cool, adjust to pH 2-3 with hydrochloric acid, and extract by shaking with two 15-ml quantities of ether. Combine the ether extracts and wash with two 15-ml quantities of water, separate the ether layer, and evaporate to dryness. Dissolve the residue in 1 ml of ether acetate as the test solution. Dissolve cholic acid CRS, hyodeoxycholic acid CRS, and ursodeoxycholic acid CRS in ethyl acetate to produce a mixture containing 1 mg of each per ml as the reference solution. Carry out the method for thin layer chromatography (Appendix Ⅵ B), using silica gel G as the coating substance and the upper layer of a mixture of *n*-hexane, ethyl acetate, methanol, and acetic acid (20 : 25 : 3 : 2) as the mobile phase. Apply separately 5 μl of the test solution and 2 μl of the reference solution to the plate. After developing and removing the plate, dry in air. Spray with the 10% solution of sulfuric acid in ethanol, heat at 105℃ for several minutes, and examine under ultraviolet light at 365 nm. The fluorescent spots in the chromatography obtained with the test solution correspond in position and colour to the spots in the chromatography obtained with the reference solution.

Other requirements Comply to the general requirements for capsules (Appendix Ⅰ L).

Assay Carry out the method for high performance liquid chromatography (Appendix Ⅵ D).

Chromatography system and system suitability Use octadecylsilane bonded silica gel as the stationary phase and a mixture of acetonitrile and 0.033 mol/L solution of potassium dihydrogen phosphate solution (30 : 70) as the mobile phase. As detector a spectrophotometer set at 265 nm. The number of theoretical plates of the column is not less than 3000, calculated with the reference to the peak of berberine hydrochloride.

Reference solution Weigh accurately a quantity of berberine hydrochloride CRS, dissolve in a mixture of hydrochloric acid and 70% ethanol (1 : 100) to produce a reference solution containing 10 μg per ml.

Test solution Pulverize the contents, obtained under the test of packing variation, to fine powder, weigh accurately 0.3 g. Add 30 ml of a mixture of hydrochloric acid and 70% ethanol (1 : 100), heat under reflux for 1 hour, allow to cool, filter, and transfer the filtrate to a 50 ml volumetric flask. Wash the container and the residue with a mixture of hydrochloric acid and 70% ethanol (1 : 100) for several times, combine the washings to the same flask, and dilute to volume with a mixture of hydrochloric acid and 70% ethanol (1 : 100). Mix well, centrifuge, measure accurately 1 ml of the supernatant to a 10 ml volumetric flask, dilute to volume with the mobile phase, and shake well.

Procedure Inject accurately 10 μl of each of the reference solution and the test solution into the column, respectively, and calculate the content.

It contains not less than 3.0 mg of berberine hydrochloride ($C_{20}H_{18}ClNO_4$) per capsule for Strength (1), and 1.5 mg for Strength (2), referred to Rhizoma Coptidis.

Action To clear *heat*, relieve *toxicity* and convulsion.

Indications Ulcers in the mouth or on the tongue, swollen and painful gums and throat, or high fever, restlessness and proneness to fright in children due to accumulation of toxic materials.

Usage and dosage 1-2 capsules for Strength (1), and 2-4 capsules for Strength (2), twice a day, appropriate reduction of the dosage for children under 3 years of age.

Precaution Be cautious about pregnant women.

Strength (1) 0.3 g per capsule (2) 0.15 g per capsule

Storage Preserve in tightly closed containers.

Weichang'an Wan
(胃肠安丸)

Weichang'an Pills

Ingredients Radix Aucklandiae; Lignum Aquilariae Resinatum; Fructus Aurantii (stir-baked with bran); Lignum Santali Albi; Radix et Rhizoma Rhei; Cortex Magnoliae Officinalis (processed with ginger); Cinnabaris; Moschus; Semen Crotonis Pulveratum; Fructus Jujubae (cored); Rhizoma Chuanxiong.

Procedure Levigate Cinnabaris to very fine powder. Pulverize Semen Crotonis Pulveratum and Moschus to fine powder separately. Pulverize the other eight ingredients to fine powder, triturate with the fine powder of Semen Crotonis Pulveratum and Moschus, mix thoroughly and sift. Make pills with water, dry at a lower temperature, coat with Cinnabaris, polish and dry in air.

Description Vermilion watered pills; odour, aromatic; taste, sweet, pungent and bitter.

Identification (1) Macerate 1 g of the pills, pulverized to fine powder, in 20 ml of methanol for 1 hour and filter. Evaporate the filtrate to dryness. Dissolve the residue in 10 ml of water, add 0.5 ml of hydrochloric acid, heat on a water bath for 30 minutes, cool at once and extract with two 20-ml quantities of ether. Combine the ether layers and filter through absorbent cotton. Evaporate the filtrate to dryness, dissolve the residue in 1 ml of methanol as the test solution. Prepare a solution of 0.2 g of Radix et Rhizoma Rhei reference drug as the reference drug solution in the same manner. Dissolve chrysophanol CRS and emodin CRS in methanol to produce a mixture containing 1 mg of each per ml as the reference solution. Carry out the method for thin layer chromatography (Appendix Ⅵ B), using silica gel G containing sodium carboxymethylcellulose as the coating substance and a mixture of petroleum ether (30-60℃), ethyl formate and formic acid (14 : 7 : 1) as the mobile phase. Apply separately 4 μl of each of the three solutions to the plate. After developing and removal of the plate, dry in air and examine under ultraviolet light at 365 nm. The orange fluorescent spots in the chromatogram obtained with the test solution correspond in position and colour to the spots in the chromatogram obtained with the reference drug solution and the reference solution. The spots turn to red on

exposure to ammonia vapour.
(2) Pulverize 1 g of the pills to fine powder, macerate in 20 ml of methanol for 1 hour and filter. Concentrate the filtrate to about 2 ml as the test solution. Prepare a solution of 0.3 g of Cortex Magnoliae Officinalis reference drug as the reference drug solution in the same manner. Dissolve magnolol and honokiol CRS in methanol to produce a mixture containing 1 mg of each per ml as the reference solution. Carry out the method for thin layer chromatography (Appendix Ⅵ B), using silica gel G as the coating substance and a mixture of benzene and methanol (18 : 1) as the mobile phase. Apply separately 2 μl of each of the three solutions to the plate. After developing and removal of the plate, dry in air. Spray with 1% vanillin in sulfuric acid and heat at 100℃ for about 10 minutes. The spots in the chromatogram obtained with the test solution correspond in position and colour to the spots in the chromatogram obtained with the reference drug solution and the reference solution.

Other requirements Comply with the general requirements for pills (Appendix Ⅰ A).

Assay Carry out the method for high performance liquid chromatography (Appendix Ⅵ D).

Chromatographic system and system suitability Use octadecylsilane bonded silica gel as the stationary phase and a mixture of acetonitrile, methanol, and water (20 : 50 : 40) as the mobile phase. As detector a spectrophofometer set at 294 nm. The number of theoretical plates of the column is not less than 4000, calculated with the reference to the peak of magnolol.

Reference solution Dissolve separately a quantity of magnolol CRS and honokiol CRS, weighed accurately, in methanol to produce two solutions containing 60 μg of magnolol per ml and 10 μg of honokiol per ml as the reference solutions.

Test solution Grind 3 g of the pills to fine powder. Weigh accurately 0.5 g, place in a conical flask with stopper, add accurately 50 ml of chloroform, weigh and stand overnight. Ultrasonicate (power, 250 W; frequency, 33 kHz) for 1.5 hours, allow to cool, weigh again, replenish the lost weight with chloroform and filter. Evaporate 15 ml of the successive filtrate, accurately measured, to dryness, dissolve the residue in methanol in a 5 ml volumetric flask, dilute with methanol to the volume and mix well.

Procedure Inject accurately 20 μl of each of the reference solutions and the test solution into the column and determine.
It contains not less than 1.0 mg of the total amount of magnolol ($C_{18}H_{18}O_2$) and honokiol ($C_{18}H_{18}O_2$) per gramme, referred to Cortex Magnoliae Officinalis.

Action To resolve *dampness* with aromatics, regulate *qi* flow to kill pain, and invigorate the stomach and remove retained food.

Indications Diarrhea, loss of appitite, nausea, vomiting, abdominal distension and pain due to *dampness* retaining in the *middle-energizer* and indigestion; enteritis or dysentery with above symptoms.

Usage and dosage 20 small pills, 3 times a day; 4-6 small pills for children under 1 year of age, 2-3 times a day; 6-12 small pills for children of 1-3 years of age, 3 times a day, appropriate increase of the dosage for children older than 3 years of age.
4 big pills, 3 times a day, appropriate reduction of the dosage for children.

Strength (1) 0.08 g per 20 small pills
(2) 0.08 g per 4 big pills

Storage Preserve in tightly closed containers.

Weikangling Jiaonang (胃康灵胶囊)

Weikangling Capsules

Ingredients Radix Paeoniae Alba 317.5 g; Rhizoma Bletillae 238.1 g; Radix et Rhizoma Notoginseng 9.9 g; Radix et Rhizoma Glycyrrhizae 317.5 g; Poria 238.1 g; Rhizoma Corydalis 158.7 g; Endoconcha Sepiae 31.7 g; Extractum Belladonnae 2.1 g.

Procedure Pulverize Rhizoma Bletillae, Radix et Rhizoma Notoginseng and Endoconcha Sepiae to fine powder. Decoct Radix et Rhizoma Glycyrrhizae with water 4 times, 3 hours for the first and second time respectively, 2 hours for the third and forth time respectively; filter, combine the filtrate, allow to stand for 24 hours, reserve the supernatant. Decoct Radix Paeoniae Alba, Rhizoma Corydalis and Poria with water twice, 3 hours for the first time and 1 hour for the second time, filter, combine the filtrate, allow to stand for 24 hours; combine this supernatant with the above reserved supernatant, concentrate them to a appropriate amount, add the above fine powder and Extractum Belladonnae, mix thoroughly, dry, pulverize to fine powder, add a quantity of excipient, mix thoroughly, make to 1000 capsules.

Description Capsules containing light-yellow to brown powder; taste, sweet.

Identification (1) Heat under reflux 2 g of the contents, with 1 ml of hydrochloric acid and 15 ml of chloroform for 1 hour, cool and filter. Evaporate the filtrate to dryness, and dissolve the residue in 1 ml of ethanol as the test solution. Dissolve a quantity of glycyrrhetinic acid CRS in dehydrated ethanol to prepare a solution containing 1 mg per ml as the reference solution. Carry out the method for thin layer chromatography (Appendix Ⅵ B), using silica gel G as the coating substance and a mixture of petroleum ether (30-60℃), toluene, ethyl acetate and glacial acetic acid (10 : 20 : 7 : 0.5) as the mobile phase. Apply separately 5 μl of each of the test solution and the reference solution to the plate. After developing and removal of the plate, dry in air. Spray with 10% phosphomolybdic acid in ethanol and heat at 105℃ to the spots clear. The spot in the chromatogram obtained with the test solution corresponds in position and colour to the spot in the chromatogram obtained with the reference solution.
(2) Place 4 g of the contents, add 2 ml of concentrated ammonia TS and 20 ml of chloroform, ultrasonicate for 5 minutes, and filter. Transfer the filtrate to a separating funnel, wash with 15 ml of water and discard the washing, evaporate the filtrate to dryness, and dissolve the residue in 1 ml of methanol as the test solution. Macerate 1 g of Rhizoma Corydalis reference drug in 1 ml of concentrated ammonia TS and 15 ml of chloroform for 30 minutes, then ultrasonicate for 20 minutes and filter; evaporate the filtrate to dryness, and dissolve the residue in 1 ml of methanol as the reference drug solution. Carry out the method for thin layer chromatography (Appendix Ⅵ B), using silica gel G mixed with 1% solution of sodium hydroxide as the coating substance and a mixture of *n*-hexane, chloroform and methanol (15 : 8 : 2), as the mobile phase. Apply separately 5 μl of each of the test solution and the reference solution to the plate. After developing and removal of the plate, dry in air. Exposure to iodine vapours under daylight to the spots clear, examine under ultraviolet light at 365 nm. The fluorescent spots in the chromatogram obtained

with the test solution correspond in position and colour to the spots obtained with the reference drug solution.
(3) Place 4 g of the contents, add 40 ml *n*-butanol saturated with water, and ultrasonicate for 20 minutes, filter, wash the filtrate with two-20 ml quantities of ammonia TS; evaporate the filtrate to dryness and dissolve the residue in 1 ml of methanol as the test solution. Prepare a solution of 0.3 g of Radix et Rhizoma Notoginseng reference drug and 10 ml of *n*-butanol saturated with water in the same manner as the reference drug solution. Dissolve separately a quantity of ginsenoside Rg_1 CRS and notoginsenoside R_1 CRS in methanol to prepare two kinds of solutions containing 1 mg per ml respectively as the reference solutions. Carry out the method for thin layer chromatography (Appendix Ⅵ B), using silica gel G as the coating substance and the lower layer of a mixture of chloroform, methanol and water (13 : 7 : 2), standing below 10℃, as the mobile phase. Apply separately 2-4 μl of the test solution, 2 μl of each of the reference solutions and the reference drug solution to the plate. After developing and removal of the plate, dry in air. Spray with 10% sulfuric acid in ethanol and heat at 105℃ to the spots clear. The spots in the chromatogram obtained with the test solution correspond in position and colour to the spots in the chromatogram obtained with the reference solutions and the reference drug solution.

Other requirements Comply with the general requirements for capsules (Appendix Ⅰ L).

Assay Carry out the method for high performance liquid chromatography (Appendix Ⅵ D).

Chromatographic system and system suitability Use octadecylsilance bonded silica gel as the stationary phase and a mixture of acetonitrile and 0.1% solution of phosphoric acid (15 : 85) as the mobile phase. As detector a spectrophotometer set at 230 nm. The number of theoretical plates of the column is not less than 2000, calculated with the reference to the peak of paeoniflorin.

Reference solution Dissolve a quantity of paeoniflorin CRS, accurately weighed, in methanol to prepare a solution containing 50 μg per ml.

Test solution Weigh accurately 0.3 g of the contents, obtained under the test of packing variation, place to a stopper conical flask, add accurately 25 ml of dilute ethanol TS, stopper tightly and weigh; ultrasonicate (power, 200 W; frequency, 40 kHz) for 30 minutes, allow to stand to cool, weigh again; replenish the loss of weight with dilute ethanol TS and mix well. Filter, and use the successive filtrate as the test solution.

Procedure Inject accurately 5 μl of each of the reference solution and the test solution into the column, and calculate the content.
It contains not less than 1.0 mg of paeoniflorin ($C_{23}H_{28}O_{11}$) per capsule, referred to Radix Paeoniae Alba.

Action To nourish the liver and harmonize the stomach, and dissipate stasis to stop bleeding, relieve spasm and pain, remove necrotic tissues and promote regeneration of tissues.

Indications Pain in the stomach and hypochondria, belching, casting up of gastric acid due to disharmony between the liver and stomach and blockage of; acute and chronic gastritis, gastric and duodenal ulcers and gastrorrhagia with above symptoms.

Usage and dosage 4 capsules, 3 times a day, taken after meals.

Strength 0.4 g per capsule

Storage Preserve in tightly closed containers.

Weishuning Keli
(胃舒宁颗粒)

Weishuning Granules

Ingredients Radix et Rhizoma Glycyrrhizae 595 g; Endoconcha Sepiae 595 g; Radix paeoniae Alba 464 g; Rhizoma Atractylodis Macrocephalae 310 g; Rhizoma Corydalis 310 g; Radix Codonopsis 119 g.

Procedure Decoct the above six ingredients with water twice, 2 hours for each time; filter, combine the filtrate, allow to stand. Concentrate the supernatant to an appropriate amount, add a quantity of dextrin, mix thoroughly, and dry; pulverize to fine powder, make granules, dry and make to 1000 g. Or concentrate the supernatant in vacuum to an appropriate amount, dry in spraying; add a quantity of dextrin and lactose to make granules, dry and make to 600 g.

Description Brownish-yellow granules; odour, aromatic; taste, sweet.

Identification (1) Triturate 2 g of the granules (without lactose) or 1.2 g of the granules (with lactose) to powder, add 40 ml of ethanol, and ultrasonicate for 30 minutes; filter, evaporate the filtrate to dryness, and dissolve the residue in 1 ml of methanol as the test solution. Prepare a solution of 1 g of Radix et Rhizoma Glycyrrhizae reference drug in the same manner as the reference drug solution. Carry out the method for thin layer chromatography (Appendix Ⅵ B), using silica gel G as the coating substance and the lower layer of a mixture of chloroform, methanol and water (13 : 6 : 2) as the mobile phase. Apply separately 2 μl of each of the test solution and the reference solution to the plate; pre-equilibrate the plate in the chamber for 20 minutes. After developing and removal of the plate, dry in air. Spray with 10% sulfuric acid in ethanol and heat at 105℃ for about 5 minutes. Examine under ultraviolet light at 365 nm. The fluorescent spots in the chromatogram obtained with the test solution correspond in position and colour to the spots in the chromatogram obtained with the reference drug solution.
(2) Triturate 5 g of the granules (without lactose) or 3 g of the granules (with lactose) to powder, add 30 ml of ethanol, and ultrasonicate for 30 minutes, filter; evaporate the filtrate on a water bath to nearly dryness, add 2 g of neutral aluminium oxide (100-200 mesh), stir well and dry on a water bath. Apply to a small column packed with neutral aluminium oxide (100-200 mesh, 2 g, 1 cm in diameter), and elute with ethanol. Collect 30 ml of the elution and evaporate it to dryness; dissolve the residue in 1 ml of methanol as the test solution. Dissolve a quantity of paeoniflorin CRS in methanol to prepare a solution containing 1 mg per ml as the reference solution. Carry out the method for thin layer chromatography (Appendix Ⅵ B), using silica gel G as the coating substance and a mixture of chloroform, ethyl acetate, methanol and concentrated a mmonia TS (8 : 1 : 3 : 05) as the mobile phase. Apply separately 5 μl of each of the test solution and the reference solution to the plate. After developing and removal of the plate, dry in air. Spray with 5% vanillin in sulfuric acid and heat at 105℃ to the spots clear. The spot in the chromatogram obtained with the test solution corresponds in position and colour to the spot obtained with the reference solution.
(3) Triturate 5 g of the granules (without lactose) or 3 g of the granules (with lactose) to powder, add 25 ml of water, adjust the pH value to 2 with hydrochloric acid, filter; adjust the pH value of the filtrate to 10-11 with concentrated ammonia TS. Extract the filtrate with two 20-ml quantities

of ether, combine the ether extracts, and evaporate to dryness. Dissolve the residue in 0.5 ml of methanol as the test solution. Decoct 0.2 g of Rhizoma Corydalis reference drug with a quantity of water for 30 minutes, filter; use the filtrate to prepare the reference drug solution in the same manner as described in the test solution preparation, beginning at the words "adjust the pH value to 2 with hydrochloric acid". Dissolve a quantity of tetrahydropalmatine CRS in methanol to prepare a solution containing 0.5 mg per ml as the reference solution. Carry out the method for thin layer chromatography (Appendix VI B), using silica gel G as the coating substance and a mixture of *n*-hexane, dichloromethane and methanol (12 : 8 : 1) as the mobile phase. Apply separately 10 μl of each of the test solution and the reference drug solution, 2 μl of the reference solution to the plate. Pre-equilibrate the plate in the chamber for 20 minutes. After developing and removal of the plate, dry in air. Exposure to iodine vapours and examine under ultraviolet light at 365 nm. The fluorescent spots in the chromatogram obtained with the test solution correspond in position and colour to the spots in the chromatogram obtained with the reference solution and the reference drug solution.

Other requirements Comply with the general requirements for granules (Appendix I C).

Assay Carry out the method for high performance liquid chromatography (Appendix VI D).

Chromatographic system and system suitability Use octadecylsilance bonded silica gel as the stationary phase and a mixture of acetonitrile and 0.017 mol/L solution of phosphoric acid (35 : 65) as the mobile phase. As detector a spectrophotometer set at 250 nm. The number of theoretical plates of the column is not less than 2500, calculated with the reference to the peak of glycyrrhizic acid.

Reference solution Dissolve a quantity of ammonium glycyrrhizinate CRS, accurately weighed, in 60% methanol to prepare a solution containing 0.1 mg per ml (equal to containing glycyrrhizic acid 97.95 μg).

Test solution Triturate a quantity of granules, obtained under the test of weight variation, to powder, and mix thoroughly, Weigh accurately 0.3 g (without lactose) or 0.18 g (with lactose) of the granules, place to a stopper conical flask, add accurately 25 ml of a mixture of methanol and 0.017 mol/L solution of phosphoric acid, stopper tightly and weigh; macerate for 1 hour, and ultrasonicate (power, 160 W; frequency, 50 kHz) for 30 minutes; allow to stand to cool, weigh again; replenish the loss of the weight with the above mixture and mix well. Filter, and use the successive filtrate as the test solution.

Procedure Inject accurately 10 μl of each of the reference solution and the test solution into the column, and calculate the content.

It contains not less than 20 mg of glycyrrhizic acid ($C_{42}H_{62}O_{16}$) per pack, referred to Radix et Rhizoma Glycyrrhizae.

Action To reinforce *qi* and invigorate the spleen, and relieve hyperacidity and kill pain.

Indications Gastric pain alleviated by warmth and pressure, casting up of gastric acid due to *a deficiency of the qi* of the spleen and stomach and disharmony between the liver and stomach; gastric and duodenal ulcer with above symptoms.

Usage and dosage 1 pack, 3 times a day, taken after dissolved in boiled water.

Strength (1) 5 g per pack
(2) 3 g per pack (with lactose)

Storage Preserve in tightly closed containers.

Wubei San
(乌贝散)

Wubei Powder

Ingredients Endoconcha Sepiae (shelled) 850 g; Bulbus Fritillariae Thunbergii 150 g; Oleum Pericarpii Citri 1.5 g.

Procedure Pulverize Endoconcha Sepiae (shelled) and Bulbus Fritillariae Thunbergii to fine powder, add Oleum Pericarpii Citri, mix thoroughly and sift.

Description A yellowish-white powder; odour, slightly aromatic; taste, salty and slightly bitter.

Identification (1) Microscopical: Irregular transparent thin slices or pieces with fine stripes or reticular striations. Starch granules ovoid, 35-48 μm in diameter; hila pointed, V-shaped or U-shaped at the narrower end, with fine and dense striations.

(2) Stir thoroughly 10 g of the powder and 5 ml of concentrated ammonia TS, stand for 30 minutes, add 50 ml of chloroform, ultrasonicate for 2 hours, filter, evaporate the filtrate to dryness and dissolve the residue in 1 ml of ethanol as the test solution. Prepare a solution of 2 g of Bulbus Fritillariae Thunbergii reference drug, add 5 ml of concentrated ammonia TS, stand for half an hour, and 30 ml of chloroform as the reference drug solution in the same manner. Carry out the method for thin layer chromatography (Appendix VI B), using silica gel G as the coating substance and a mixture of *n*-hexane, ethyl acetate and diethylamine (8 : 12 : 1) as the mobile phase. Apply separately 10 μl of the test solution and 6 μl of the reference solution to the plate. After developing and removal of the plate, dry in air. Spray with dilute potassium iodobismuthate TS. The spots in the chromatogram obtained with the test solution correspond in position and colour to the spots in the chromatogram obtained with the reference drug solution.

Other requirements Comply with the general requirements for powders (Appendix I B).

Action To arrest gastric acid and relieve pain, and stop bleeding.

Indications Gastralgia, acid regurgitation and gastric upset or gastric discomfort due to disharmony between the liver and stomach; gastroduodenal ulcer with above symptoms.

Usage and dosage 3 g, 3 times a day, taken before meals; double the dosage in duodenal ulcer.

Strength 45 g per bottle

Storage Preserve in well closed containers, protected from moisture.

Wufu Huadu Wan
(五福化毒丸)

Wufu Huadu Pills

Ingredients Pulvis Cornus Bubali Concentratus 20 g; Fructus Forsythiae 60 g; Indigo Naturalis 20 g; Rhizoma Coptidis 5 g; Fructus Arctii (stir-baked) 50 g; Radix Scrophulariae 60 g; Radix Rehmanniae 50 g; Radix Platycodonis 50 g; Natrii Sulfas 5 g; Radix Paeoniae Rubra 50 g; Radix et Rhizoma Glycyrrhizae 60 g.

Procedure Pulverize the above ingredients except Pulvis

Cornus Bubali Concentratus, to fine powder. Triturate Pulvis Cornus Bubali Concentratus with the above powder, sift and mix well. To each 100 g of the powder add 45-55 g of refined honey and a quantity of water to make water-honeyed pills and dry; or add 100-120 g of refined honey to make big honeyed pills.

Description Black water-honeyed pills or big honeyed pills; taste, sweet, slightly bitter and salty.

Identification (1) Microscopical: Irregular pieces or granules blue. Anastomosing laticiferous vessels 14-25 μm in diametor, containing pale yellow granules. Stone cells yellowish-brown or colourless, subrectangular, subrounded or irregular, striation well-marked, about 94 μm in diameter. Stone cells of endocarp sharp fusiform or oblong, parquet orderly in surface view, and subrectangular or long-strip in lateral view, walls thickened, lignified, pits elongated. Fibre bundles bright yellow, walls slightly thickened and with distinct pits. Fibre bundles surrounded by parenchymatous cells containing prisms of calcium oxalate, forming crystal fibres. Fibres of endocarp short fusiform, with the upper and lower layers crisscrossed. Parenchyma greyish-brown to blackish-brown, cells mostly shrunken, and each containing a brown nucleus-like mass.
(2) Grind well 9 g of the big honeyed pills, cut into pieces, with 4-5 g of kieselguhr, or pulverize 6 g of the water-honeyed pill, add 30 ml of ether, ultrasonicate for 10 minutes and filter. Evaporate the filtrate to dryness and dissolve the residue in 1 ml of chloroform as the test solution. Dissolve indigotin CRS and indirubin CRS in chloroform to produce a mixture containing 1 mg of each per ml as the reference solution. Carry out the method for thin layer chromatography (Appendix Ⅵ B), using silica gel G as the coating substance and a mixture of toluene, chloroform and acetone (5 : 4 : 1) as the mobile phase. Apply separately 5 μl of each of the two solutions to the plate. After developing and removal of the plate, dry in air. The spots in the chromatogram obtained with the test solution correspond in position and colour to the spots in the chromatogram obtained with the reference solution.
(3) Grind well 10 g of water-honeyed pills, or triturate 14 g of big honeyed pills, cut into pieces, with 7 g of kieseguhr. Add 30 ml of chloroform, heat under reflux for 1 hour, cool and filter. Evaporate the filtrate to dryness and dissolve the residue in 1 ml of ethanol as the test resolution. Prepare a solution with 0.5 g of Fructus Arctii reference drug in 30 ml of chloroform in the same manner as the reference drug solution. Dissolve arctiin CRS in ethanol to produce a solution containing 5 mg per ml as the reference solution. Carry out the method for thin layer chromatography (Appendix Ⅵ B), using silica gel G as the coating substance and a mixture of chloroform, methanol and water (40 : 8 : 1) as the mobile phase. Apply separately 2 μl of each of the three solutions to the plate. After developing and removal of the plate, dry in air, spray with 10% sulfuric acid in ethanol, and heat at 105℃ to the spots clear. The spots in the chromatogram obtained with the test solution correspond in position and colour to the spots in the chromatograms obtained with the reference drug solution and the reference solution.
(4) Grind well 1.5 g of water-honeyed pills, or triturate 2 g of big honeyed pills, cut into pieces, with 1 g of kieseguhr. Add 2 ml of hydrochloric acid and 15 ml of chloroform, heat under reflux for 1 hour, cool and filter Evaporate the filtrate to dryness and dissolve the residue in 1 ml of ethanol as the test resolution. Prepare a solution with 0.5 g of Radix et Rhizoma Glycyrrhizae reference drug in the same manner as the reference drug solution. Dissolve glycyrrhetic acid CRS in ethanol to prepare a solution containing 1 mg per ml as the reference solution. Carry out the method for thin layer chromatography (Appendix Ⅵ B), using silica gel G as the coating substance and a mixture of petroleum ether (30-60℃), toluene, ethyl acetate and glacial acetic acid (10 : 20 : 7 : 0.5) as the mobile phase. Apply separately 2 μl of each of the three solutions to the plate. After developing and removal of the plate, dry in air, spray with 10% phosphomolybdic acid in ethanol, and heat at 105℃ to the spots clear. The spots in the chromatogram obtained with the test solution correspond in position and colour to the spots in the chromatograms obtained with the reference drug solution and the reference solution.

Other requirements Comply with the general requirements for pills (Appendix Ⅰ A).

Assay Carry out the method for high performance liquid chromatography (Appendix Ⅵ D).

Chromatographic system and system suitability Use octadecylsilane bonded silica gel as the stationary phase and a mixture of methanol and water (41 : 59) as the mobile phase. As detector a spectrophotometer set at 280 nm. The number of theoretical plates of the column is not less than 1500, calculated with the reference to the peak of arctiin.

Reference solution Weigh accurately a quantity of acrctiin CRS in methanol to prepare a solution containing 30 μg per ml as the reference solution.

Test solution Grind well the water-honeyed pills, weigh accurately 0.3 g, or cut the big honeyed pill, obtained under the test of weight variation, into pieces, weigh accurately 0.5 g, in a stopper conical flask, add accurately 50 ml of methanol, stopper well, and weigh. Ultrasonicate (power, 250 W; frequency, 33 kHz) for 30 minutes, cool, weigh again, replenish the loss of weight with methanol, shake well, filter and use the successive filtrate as the test solution.

Procedure Inject accurately 10 μl of each of the reference solution and the test solution into the column, respectively, and calculate the content.
It contains not less than 3.0 mg per gram of the water-honeyed pill, 6.4 mg per big honeyed pill, of arctiin ($C_{27}H_{34}O_{11}$), referred to Fructus Arctii.

Action To clear *heat* and toxic materials, and cool blood to reduce swelling.

Indications Sores and furuncles in children, or prickly heat, swollen and painful throat, ulcers in the mouth or on the tongue, gum bleeding or mumps due to abundant *heat* in blood.

Usage and dosage 2 g of water-honeyed pills or 1 big honeyed pill, 2-3 times a day.

Strength 3 g per big honeyed pill

Storage Preserve in tightly closed containers.

Wuhu San
(五虎散)

Wuhu Powder

Ingredients Radix Angelicae Sinensis 350 g; Flos Carthami 350 g; Radix Saposhnikoviae 350 g; Rhizoma Arisaematis (processed) 350 g; Radix Angelicae Dahuricae 240 g.

Procedure Pulverize the above five ingredients to fine powder, sift and mix thoroughly.

Description An orange-yellow to dark yellow powder; odour, slightly aromatic; taste, slightly pungent.

Identification (1) Microscopical: Compound starch granules consisting of 8-12 components. Parenchymatous cells spindle-shaped, with slightly thickened walls, and very fine oblique crisscross striations. The fragments of corolla yellow, with reddish-brown or yellowish-brown secretory cells. Pollen grains spheroidal or ellipsoidal, about 60 μm in diameter, exine with spinules and 3 germinal apertures. Vittae containing golden-yellow secretions, about 30 μm in diameter. Needle crystals of calcium oxalate in bundles or scattered, about 90 μm long.

(2) To 3 g add 10 ml of ethanol, ultrasonicate for 10 minutes, filter, and use the filtrate as the test solution. Prepare two solutions of 1 g of Radix Angelicae Sinensis and 1 g of Radix Angelicae Dahuricae reference drug as the reference drug solutions in the same manner. Carry out the method for thin layer chromatography (Appendix Ⅵ B), using silica gel G as the coating substance and a mixture of petroleum ether (60-90℃) and ethyl acetate (4 : 1) as the mobile phase. Apply separately 5 μl of each of the three solutions to the plate. After developing and removal of the plate, dry in air and examine under ultraviolet light at 365 nm. The fluorescent spots in the chromatogram obtained with the test solution correspond in position and colour to the spots in the chromatograms obtained with the reference drug solutions.

(3) To 3 g of the powder, add 10 ml of 80% acetone solution, ultrasonicate for 10 minutes, allow to stand and use the supernatant as the test solution. Prepare a solution of 0.5 g of Flos Carthami reference drug in the same manner as the reference drug solution. Carry out the method for thin layer chromatography (Appendix Ⅵ B), using silica gel G as the coating substance and a mixture of ethyl acetate, methanol, formic acid and water (7 : 0.4 : 2 : 3) as the mobile phase. Apply separately 10 μl of the test solution and the reference drug solution to the plate. After developing and removal of the plate, dry in air. The spots in the chromatogram obtained with the test solution correspond in position and colour to the spots in the chromatogram obtained with the reference drug solution.

Other requirements Comply with the general requirements for powders (Appendix Ⅰ B).

Assay Carry out the method for high performance liquid chromatography (Appendix Ⅵ D).

Chromatographic system and system suitability Use octadecylsilane bonded silica gel as the stationary phase and a mixture of methanol and water (32 : 48) as the mobile phase. As detector a spectrophotometer set at 292 nm. The number of theoretical plates of the column is not less than 2500, calculated with the reference to the peak of prim-*O*-glucosylcimcifugin.

Reference solution Disslove separately a quantity of prim-*O*-glucosylcimcifugin CRS and 5-*O*-methylvisammioside CRS, weigh, accurately, in methanol to produce two solutions containing 100 μg of prim-*O*-glucosylcimcifugin per ml and 60 μg of 5-*O*-methylvisammioside as the reference solutions.

Test solution To 3 g of the powder, mix well, weigh accurately to a conical flask with stopper, add accurately 25 ml of methanol, weigh, ultrasonicate (power, 100 W; frequency, 40 kHz) for 45 minutes, allow to stand, weigh again, replenish the lost weight, mix well, filter and use the filtrate as the test solution.

Procedure Inject accurately 10 μl of each of the reference solution and the test solution into the column, and calculate the content.

It contains not less than 0.50 mg of prim-*O*-glucosylcimcifugin ($C_{37}H_{54}O_{11}$) and 5-*O*-methylvisammioside ($C_{22}H_{28}O_{10}$) per gram, referred to Radix Saposhnikoviae.

Action To promote blood circulation to dissipate blood stasis and reduce swelling to kill pain.

Indications Traumatic injuries and bruise.

Usage and dosage 6 g, twice a day, taken with warm yellow rice wine or warm boiled water. For external use, mix it with white spirit and apply it to the lesion.

Precaution Be cautious about pregnant women.

Storage Preserve in tightly closed containers.

Wuji Baifeng Wan
(乌鸡白凤丸)

Wuji Baifeng Pills

Ingredients Pullus cum Osse Nigko (removed from feather, claw and intestine) 640 g; Colla Cornus Cervi 128 g; Carapax Trionycis (processed) 64 g; Concha Ostreae (calcined) 48 g; Oötheca Mantidis 48 g; Radix et Rhizoma Ginseng 128 g; Radix Astragali 32 g; Radix Angelicae Sinensis 144 g; Radix Paeoniae Alba 128 g; Rhizoma Cyperi (processed with vinegar) 128 g; Radix Asparagali 64 g; Radix et Rhizoma Glycyrrhizae 32 g; Radix Rehmanniae 256 g; Radix Rehmanniae Praeparata 256 g; Rhizoma Chuanxiong 64 g; Radix Stellariae 26 g; Radix et Rhizoma Salviae Miltiorrhizae 128 g; Rhizoma Dioscoriae 128 g; Semen Euryales (stir-baked) 64 g; Cornu Cervi Degelatinatum 48 g.

Procedure Pulverize Radix Rehmanniae Praeparata, Radix Rehmanniae, Rhizoma Chuanxiong, Cornu Cervi Degelatinatum, Radix Stellariae, Semen Euryales, Rhizoma Dioscoriae and Radix et Rhizoma Salviae Miltiorrhizae to coarse powder. Crush properly the other twelve ingredients separately, place the powder in a tank, add 1500 g of yellow rice wine, cover and stew the wine till exhausted. Take the drug out and stir well with the above coarse powder, dry at a lower temperature, pulverize to fine powder, sift and mix thoroughly. To each 100 g of the powder add 30-40 g of refined honey and a quantity of water to make water-honeyed pills and dry, or add 90-120 g of refined honey to make small honeyed pills or big honeyed pills.

Description Blackish-brown to black water-honeyed pills, small honeyed pills or big honeyed pills; taste, sweet and slightly bitter.

Identification (1) Microscopical: Clusters of calcium oxalate 20-68 μm in diameter, with acute angles. Clusters of calcium oxalate 18-32 μm in diameter, occurring in parenchymatous cells, often arranged in rows, or several clusters in one cell. Raphides of calcium oxalate occurring in mucilage cells, 80-240 μm long, and the single needle 2-5 μm in diameter. Parenchymatous cells spindle-shaped, with slightly thickened walls, showing minute oblique crisscross striations. Parenchyma greyish-brown to blackish-brown, cells mostly shrunken, and each containing a brown nucleus-like mass. Fibre bundles surrounded by parenchymatous cells containing prisms of calcium oxalate, forming crystal fibres. Fibres in bundles or scattered, with thickened walls and longitudinal fissures on surface, both ends broken to broom-like, or somewhat truncate. Fibres in bundles, dark brownish-red or reddish-brown, with thickened walls. Stone cells rectangular or slat-shaped, 50-110 μm in diameter, with very fine and dense pits. Cork cells yellowish-brown, with thin and slightly sinuous walls, overlapped in multiple layers. Irregular pieces pale greyish-yellow, with fissures or fine striations on surface. Irregular pieces translucent and strongly reflective on edge, with delicate short striations, small pores and fine fissures on surface.

Long column muscle fibres in bundles, with fine slightly sinuous and meticalous striations on the surface.
(2) Triturate well 18 g of the small honeyed pills or big honeyed pills, in pieces, with 12 g of kieselguhr; or pulverize 12 g of the water-honeyed pills to fine powder, heat under reflux with 100 ml of chloroform for 1.5 hours, filter, collect the drug residue for the further use. Evaporate the filtrate to dryness, dissolve the residue in 1.5 ml of ethanol, filter and use the filtrate as the test solution. Dissolve tanshinone ⅡA CRS in ethanol to produce a solution containing 0.5 mg per ml as the reference solution. Carry out the method for thin layer chromatography (Appendix Ⅵ B), using silica gel G containing sodium carboxymethylcellulose as the coating substance and a mixture of benzene and ethyl acetate (19 : 1) as the mobile phase. Apply separately to the plate 6 μl of each of the two solutions. After developing and removal of the plate, dry in air. The dark red spot in the chromatogram obtained with the test solution corresponds in position and colour to the spot in the chromatogram obtained with the reference solution.
(3) To the drug residue, obtained in the test for Identification (2) and extracted with chloroform, add 40 ml of ethanol, warm macerate for 1 hour with frequently shaking and filter. Evaporate the filtrate to dryness, dissolve the residue in 30 ml of water and extract with three 20-ml quantities of *n*-butanol saturated with water. Combine the extracts, wash with two 20-ml quantities of water and discard the washings. Evaporate the *n*-butanol solution on a water bath to about 1 ml, add a quantity of aluminium oxide, stir well and dry on a water bath. Apply to a small column (10-15 mm in internal diameter) packed with aluminium oxide (1 g, 200 mesh) and elute with 30 ml of a mixture of ethyl acetate and methanol (1 : 1). Collect the eluate, evaporate to dryness and dissolve the residue in 1 ml of ethanol as the test solution. Dissolve paeoniflorin CRS in ethanol to produce a solution containing 2 mg per ml as the reference solution. Carry out the method for thin layer chromatography (Appendix Ⅵ B), using silica gel G as the coating substance and a mixture of chlorform, ethyl acetate, methanol and formic acid (40 : 5 : 10 : 0.2) as the mobile phase. Apply separately 6 μl of each of the two solutions to the plate. After developing and removal of the plate, dry in air, spray with 5% vanillin in sulfuric acid and heat to the spots clear. The spot in the chromatogram obtained with the test solution corresponds in position and colour to the spot in the chromatogram obtained with the reference solution.

Other requirements Comply with the general requirements for pills (Appendix Ⅰ A).

Assay Carry out the method for high performance liquid chromatography (Appendix Ⅵ D).

Chromatographic system and system suitability Use octadecylsilane bonded silica gel as the stationary phase and a mixture of methanol and water (33 : 67) as the mobile phase. As detector a spectrophotometer set at 230 nm, The number of theoretical plates of the column is not less than 2000, calculated with the reference to the peak of paeoniflorin.

Reference solution Disslove a quantity of paeoniflorin CRS, weigh accurately, in methanol to produce a solution containing 40 μg per ml.

Test solution Cut the big honeyed pills obtained under the test of weight variation into pieces, or pulverize the water-honeyed pills and small honeyed pills, weigh accurately 5 g, add accurately 25 ml of 30% ethanol, weigh, shake at intervals, allow to stand for 24 hours, ultrasonicate (power, 300 W.; frequency, 50 kHz) for 30 minutes, allow to cool, weigh again, replenish the lost weight with 30% ethanol, mix well and filter. Measure accurately 5 ml of successive filtrate, apply to the column (1.5 cm in internal diameter; 12 cm in height) packed with D-101 macroporous adsorptive resins. Elute with 100 ml of 30% ethanol, collect the eluate, evaporate to dryness, dissolve the residue in 5 ml of water for several times to a 25 ml of volumetric flask, wash the containers with methanol for several times to the same volumetric flask, dilute with methanol to the volume and mix well.

Procedure Inject accurately 10 μl of each of the reference solution and the test solution into the column, and calculate the content.
It contains paeoniflorin ($C_{23}H_{28}O_{11}$) not less than 0.35 mg per gram of the water-honeyed pills, not less than 0.22 mg per gram of small honeyed pills, and not less than 2.0 mg per big-honeyed pill, referred to Radix Paeoniae Alba.

Action To reinforce *qi* and nourish blood, regulate menstruation and arrest excessive leukorrhea.

Indications Emaciation, weakness and aching in the lower back and knees, disorders of menstruation, metrorrhagia or metrostaxis, and excessive leukorrhea due to a deficiency of *qi* and blood.

Usage and dosage 6 g of water-honeyed pills, 9 g of small honeyed pills, or 1 big honeyed pill, twice a day.

Strength 9 g per big honeyed pill

Storage Preserve in tightly closed containers.

Wuji Wan
(戊己丸)

Wuji Pills

Ingredients Rhizoma Coptidis 300 g; Fructus Evodiae (processed) 50 g; Radix Paeoniae Alba (stir-baked) 300 g.

Procedure Pulverize the above three ingredients to fine powder, sift and mix thoroughly. Make pills with water and dry.

Description Brownish-yellow watered pills; taste, bitter, slightly numb and pungent.

Identification (1) Microscopical: Fibre bundles bright yellow, with slightly thickened walls and distinct pits. Clusters of calcium oxalate 18-32 μm in diameter, occurring in parenchymatous cells, often arranged in rows or several clusters in one cell. Non-glandular hairs 2-6 celled, some cells filled with reddish-brown contents. Glandular hairs with multicellular head, elliptical, containing brownish-yellow to brownish-red contents and with a 2-5-celled stalk.
(2) Heat under reflux 0.7 g, triturated to pieces, with 10 ml of ethanol for 1 hour, allow to cool, filter and use the filtrate as the test solution. Prepare a mixture with 0.3 g each of Rhizoma Coptidis reference drug and Radix Paeoniae Alba reference drug, 0.1 g of Fructus Evodiae reference drug as the reference drug solution in the same manner. Carry out the method for thin layer chromatography (Appendix Ⅵ B), using silica gel G as the coating substance and the upper layer of a mixture of *n*-butanol, acetic acid and water (2 : 1 : 1) as the mobile phase. Apply separately to the plate 10 μl of each of the two solutions. After developing and removal of the plate, dry in air and examine under ultraviolet light at 365 nm. The fluorescent spots in the chromatogram obtained with the test solution correspond in position and colour to the spots in the chromatogram obtained with the reference drug solution. Spray with sulfuric acid solution (1→10), heat at 105℃ for 5 minutes and examine in daylight. The spots in the chromatogram obtained with the test solution correspond in position and colour to the

spots in the chromatogram obtained with the reference drug solution.

Other requirements Comply with the general requirements for pills (Appendix Ⅰ A).

Assay Place 0.7-0.9 g, in powder (through No. 3 sieve), accurately weighed, in a Soxhlet's extractor and heat under reflux with a quantity of hydrochloric acid and methanol (1 : 100) until the extract becomes colourless. Concentrate the extract, transfer to a 25 ml volumetric flask, dilute with ethanol to volume and mix well. Carry out the method for column chromatography (Appendix Ⅵ C). Apply accurately 5 ml of the solution to a neutral aluminum oxide column (0.9 cm in diameter, 5 g, packed with ethanol, pretreated with 30 ml of ethanol). Elute with 35 ml of ethanol in portions, collect the eluate in a 50 ml volumetric flask, dilute with ethanol to volume and mix well. Transfer accurately 2 ml of the solution to a 50 ml volumetric flask, dilute with 0.05 mol/L sulfuric acid solution to volume and mix well. Carry out the method for ultraviolet spectrophotometry and colourimetry (Appendix Ⅴ A), measure the absorbance at 345 nm and calculate the content of berberine hydrochloride ($C_{20}H_{18}ClNO_4$), taking 728 as the value of A (1%, 1 cm).
It contains not less than 30 mg of total alkaloids per gram, calculated as berberine hydrochloride ($C_{20}H_{18}ClNO_4$), with reference to the dried drug.

Action To purge the liver and harmonize the stomach, and check adrerse rise of *qi* to stop vomiting.

Indications Burning pain in the stomach, vomiting, casting up of gastric acid, bitter taste in the mouth, stomach discomfort, abdominal pain and diarrhea due to invasion of the stomach by *liver-fire*, and disharmony between the liver and stomach.

Usage and dosage 3-6 g, twice a day.

Storage Preserve in tightly closed containers, protected from moisture.

Wuling San
(五苓散)

Wuling Powder

Ingredients Poria 180 g; Rhizoma Alismatis 300 g; Polyporus 180 g; Cortex Cinnamomi 120 g; Rhizoma Atractylodis Macrocephalae (stir-baked) 180 g.

Procedure Pulverize the above five ingredients to fine powder, sift and mix well.

Description A pale yellow powder; odour, slightly aromatic; taste, slightly pungent.

Identification Microscopical: Irregular branched masses colourless, dissolved in chloral hydrate TS; hyphae colourless or brownish, 4-6 μm in diameter. Hyphae sticking into masses, mostly colourless; prisms of calcium oxalate octahedral, 32-60 μm in diameter. Parenchymatous cells subrounded, with elliptical pits gathered into pit groups. Anticlinal walls of endodermis cells sinuous, relatively thickened, lignified, with sparse and fine pit-canals. Needle crystals of calcium oxalate fine, 10-32 μm long, irregularly filling in parenchymatous cells. Fibre singly scattered, long fusiform, 24-50 μm in diameter, walls thickened, lignified; stone cells subsquare or subrounded, with thinner walls on one side.

Other requirements Comply with the general requirements for powders (Appendix Ⅰ B).

Action To warm *yang* to move *qi*, and drain *dampness* to promote water metabolism.

Indications Edema due to failure of *yang* to move *qi* flow and retention of water and *dampness* with manifestations of dysuria, ascites, vomiting, diarrhea and thirst with no desire for drinks.

Usage and dosage 6-9 g, twice a day.

Storage Preserve in well closed containers, protected from moisture.

Wushicha Keli
(午时茶颗粒)

Wushicha Granules

Ingredients Rhizoma Atractylodis 50 g; Radix Bupleuri 50 g; Rhizoma et Radix Notopterygii 50 g; Radix Saposhnikoviae 50 g; Radix Angelicae Dahuricae 50 g; Rhizoma Chuanxiong 50 g; Herba Pogostemonis 50 g; Radix Peucedani 50 g; Fructus Forsythiae 50 g; Pericarpium Citri Reticulatae 50 g; Fructus Crataegi 50 g; Fructus Aurantii Immaturus 50 g; Fructus Hordei Germinatus (stir-baked) 75 g; Radix et Rhizoma Glycyrrhizae 50 g; Radix Platycodonis 75 g; Massa Medicata Fermentata (stir-baked) 50 g; Folium Perillae 75 g; Cortex Magnoliae Officinalis 75 g; Black Tea 1600 g.

Procedure Distil volatile oil of Rhizoma Atractylodis, Radix Bupleuri, Rhizoma et Radix Notopterygii, Radix Saposhnikoviae, Radix Angelicae Dahuricae, Rhizoma Chuanxiong, Herba pogostemonis, Fructus Forsythiae, Radix Peucedani, Pericarpium Citri Reticulatae, Fructus Aurantii Immaturus, Folium Perillae and Cortex Magnoliae officinalis, collect the aqueous solution in a separate container. Decoct the drug residue and other ingredients with water twice for 2 hours and 1 hour respectively. Combine the decoctions, filter, and allow to stand. Combine the supernatant and the above aqueous solution, concentrate to a quantity, and precipitate with equal quantity of ethanol. Concentrate the supernatant to a thick extract, add a quantity of powdered sucrose, make granules and dry. After cooling, spray the volatile oil, mix thoroughly and make to 1000 g.

Description Brown granules; odour, slightly aromatic; taste, sweet and slightly bitter.

Identification To 12 g add 40 ml of ethanol, heat under reflux on a water bath for 30 minutes and filter. Evaporate the filtrate to dryness. Dissolve the residue in 10 ml of water in a separator, extract with successive quantities of 15 ml and 10 ml of ether, discard the ether solution. Extract with successive quantities of 15, 10, 10 and 10 ml of *n*-butanol saturated with water. Combine the *n*-butanol extracts, evaporate to dryness, and dissolve the residue in 2 ml of methanol as the test solution. Dissolve hesperidin CRS in methanol to produce a solution containing 0.2 mg per ml as the reference solution. Carry out the method for thin layer chromatography (Appendix Ⅵ B), using a polyamide film as the absorbant and a mixture of chloroform, acetone and methanol (5 : 1 : 1) as the mobile phase. Apply separately 1 μl of each of the two solutions to the plate. After developing and removal of the plate, dry in air. Spray with aluminium chloride TS, dry in air and examine under ultraviolet light at 365 nm. The fluorescent spot in the chromatogram obtained with the test solution corresponds in position and colour to the spot in the chromatogram obtained with the reference solution.

Other requirements Comply with the general requirements for granules (Appendix Ⅰ C).

Assay Carry out the method for high performance liquid chromatography (Appendix Ⅵ D).

Chromatographic system and system suitability Use octadecylsilane bonded silica gel as the stationary phase and a mixture of methanol and water (33 : 67) as the mobile phase. As detector a spectrophotometer set at 284 nm. The number of theoretical plates of the column is not less than 6000, calculated with the reference to the peak of hesperidin.

Reference solution Weigh accurately 5 mg of hesperidin CRS to a 100 ml volumetric flask, dissolve in methanol, dilute to volume and mix well. Measure accurately 5 ml of the solution to a 10 ml volumetric flask, dilute with the mobile phase to volume and mix well (containing 25 μg per ml).

Test solution Grind 6 g of the granules obtained under the test of packing variation, weigh accurately to a conical flak, add 40 ml of ethanol, heat under reflux for 30 minutes, allow to cool, filter, wash the residue and container with small quantities of ethanol, combine the filtrate, evaporate to dryness, dissolve the residue in 10 ml of water to a separator. Extract with 15 ml and 10 ml of ether separately, discard the ether extracts, extract with 15, 10, 10, and 10 ml of *n*-butanol saturated with water, combine the *n*-butanol extracts, recover the solvents to dryness, dissolve the residue in a quantity of methanol to a 10 ml volumetric flask, dilute with methanol to volume and mix well. Measure accurately 5 ml of the solution to a 10 ml volumetric flask, dilute with water to volume, and mix well.

Procedure Inject accurately 20 μl of each of the reference solution and the test solution into the column, and calculate the content.

It contains not less than 0.50 mg of hesperidin ($C_{28}H_{34}O_{15}$) per pack, referred to pericarpium Citri Reticulatae and Fructus Aurantii Lmmaturus.

Action To expel *wind* to release the exterior, and resolve *dampness* to harmonize the *middle-energizer*.

Indications Affliction from external *wind-cold* and internal impairment from indigestion with manifestations of aversion to cold, fever, headache, general pains, fullness and constriction in the chest and stomach, nausea, vomiting, abdominal pain and diarrhea.

Usage and dosage 6 g, taken after dissolved in boiled water, 1-2 times a day.

Strength 6 g per pack

Storage Preserve in tightly closed containers.

Wuwei Qingzhuo San
(五味清浊散)

Wuwei Qingzhuo Powder

Wuwei Qingzhuo Powder is a prescription used by Mongolian Nationality.

Ingredients Fructus Punicae Granati 400 g; Flos Carthami 200 g; Fructus Amomi Rotundus 50 g; Cortex Cinnamomi 50 g; Fructus Piperis Longi 50 g.

Procedure Pulverize the above five ingredients to fine powder, sift and mix thoroughly.

Description A yellowish-brown powder; odour, aromatic; taste, sour, pungent and slightly astringent.

Identification (1) Microscopical: Stone cells colourless, elliptical or subrounded, walls thickened with fine and dense pit-canals. Stone cells subsquare or subrounded, 32-88 μm in diameter, with thinner walls on one side. Sclerenchymatous cells of endotesta yellowish brown or brownish-red, subpolygonal in surface view, with thickened walls, and lumen containing a silica body. Cells of testa reddish-brown, elongated polygonal, with beaded walls. Pollen grains spheroidal or ellipsoidal, about 60 μm in diameter, extine spinous, and with 3 germinal apertures.

(2) To 10 g add 20 ml of acetone, ultrasonicate for 15 minutes, filter, and use the filtrate as the test solution. Dissolve cinnamaldehyde CRS in ethanol to produce a solution containing 2 μl per ml as the reference solution. Carry out the method for thin layer chromatography (Appendix Ⅵ B), using silica gel G mixed with sodium carboxymethylcellulose as the coating substance and a mixture of petroleum ether (60-90℃) and ethyl acetate (17 : 3) as the mobile phase. Apply separately 6 μl of the test solution and 3 μl of the reference solution to the plate. After developing and removal of the plate, dry it in air. Spray with alcoholic dinitrophenylhydrazine TS. The spot in the chromatogram obtained with the test solution corresponds in position and colour to the spot in the chromatogram obtained with the reference solution.

(3) To 2 g of the powder, add 20 ml of 80% acetone solution, shake for 15 minutes, allow to stand and use the supernatant as the test solution. Prepare a solution of 0.5 g of Flos Carthami reference drug in the same manner as the reference drug solution. Carry out the method for thin layer chromatography (Appendix Ⅵ B), using silica gel H as the coating substance and a mixture of ethyl acetate, methanol, formic acid and water (7 : 0.4 : 2 : 3) as the mobile phase. Apply separately in strips 10 μl of the test solution and 5 μl of the reference drug solution to the plate. After developing and removal of the plate, dry in air. The strips in the chromatogram obtained with the test solution correspond in position and colour to the strips in the chromatogram obtained with the reference drug solution.

(4) To 5 g of the powder, add 25 ml of dehydrated ethanol, ultrasonicate for 30 minutes, filter, collect the filtrate to an amber volumetric flask as the test solution. prepare a solution of 0.5 g of Fructus Piperis Longi reference drug and 5 ml of dehydrated ethanol in the same manner as the reference drug solution. Dissolve piperine CRS in dehydrated ethanol to an amber volumetric flash to produce a solution containing 4 mg per ml as the reference solution. Carry out the method for thin layer chromatography (Appendix Ⅵ B), using silica gel G mixed with sodium carboxymethyl cellulose as the coating substance and a mixture of cyclohexane, ethyl acetate and dehydrated ethanol (8 : 2 : 1) as the mobile phase. Apply separately 6 μl of the test solution and 2 μl of each of the reference drug solution and the reference solution to the plate. After developing and removal of the plate, dry in air, spray with 10% sulfuric acid in ethanol, examine under the ultraviolet light at 365 nm. The fluorescent spots in the chromatogram obtained with the test solution correspond in position and colour to the spots in the chromatogram obtained with the reference drug solution and the reference solution.

Other requirements Comply with the general requirements for powders (Appendix Ⅰ B).

Action To promote digestion and warm the stomach.

Indications Loss of appitite, indigestion, cold sensation and fullness in the stomach, belching, abdominal distension and diarrhea.

Usage and dosage 2-3 g, 1-2 times a day.

Strength 15 g per pack

Storage Preserve in tightly closed containers, protected

from moisture.

Wuwei Shaji San
(五味沙棘散)

Wuwei Shaji Powder

Wuwei Shaji Powder is a prescription used by Mongolian Nationality.

Ingredients Extractum Fructi Hippophae 180 g; Radix Aucklandiae 150 g; Fructus Vitis Viniferae 120 g; Radix et Rhizoma Glycyrrhizae 90 g; Fructus Gardeniae 60 g.

Procedure Pulverize Radix Aucklandiae, Radix et Rhizoma Glycyrrhizae and Fructus Gardeniae to coarse powder. Pulverize Fructus Vitis Viniferae with the above coarse powder, dry by heating, pulverize to fine powder, mix thoroughly, add Extractum Fructi Hippophae and mix thoroughly, dry by heating, pulverize to fine powder and sift.

Description A dark brown powder; odour, aromatic; taste, sour, sweet, bitter and astringent.

Identification (1) Microscopical: stone cells of pericarp containing crystals, subrounded or polygonal, 17-31 μm in diameter, walls thickened, lumina containing prisms of calcium oxalate. Fibre bundles surrouned by parenchymatous cells containing calcium oxalate prisms, forming crystal fibres. Inulin masses irregular, occasionally showing fine radial striations, dissolved on heating. Scaly hairs chrysanthemum-like, yellowish-brown, consisting of over 100 unicellular non-glandular hairs connected each others, and often broken to fan-shape.
(2) To 3 g, add 15 ml of ether, shake for 10 minutes, discard ether and evaporate the ether remained in the drug residue. To the residue add 15 ml of ethyl acetate, heat under reflux on a water bath for 1 hour, cool, and filter. Evaporate the filtrate to dryness, and dissolve the residue in 1 ml of ethanol as the test solution. Dissolve geniposide CRS in ethanol to produce a solution containing about 2 mg per ml as the reference solution. Carry out the method for thin layer chromatography (Appendix Ⅵ B), using silica gel G as the coating substance and a mixture of ethyl acetate, acetone, formic acid and water (10 : 7 : 2 : 0.5) as the mobile phase. Apply separately 5 μl of each of the two solutions to the plate. After developing and removal of the plate, dry in air. Spray with 10% sulfuric acid in ethanol, and heat to the spots clear. The spot in the chromatogram obtained with the test solution corresponds in position and colour to the spot in the chromatogram obtained with the reference solution.
(3) Prepare a solution of 0.5 g of Radix Aucklandiae as the reference drug solution in the same manner as described in the test for Identification (2). Carry out the method for thin layer chromatography (Appendix Ⅵ B), using silica gel G as the coating substance and a mixture of cyclohexane and acetone (10 : 3) as the mobile phase. Apply separately 5 μl of each of the test solution obtained in the test for Identification (2) and the reference drug solution to the plate. After developing and removal of the plate, dry in air. Spray with 10% sulphuric acid in ethanol and heat to the spots clear. The spots in the chromatogram obtained with the test solution correspond in position and colour to the spots in the chromatogram obtained with the reference drug solution.

Other requirements Compy with the general requirements for powders (Appendix Ⅰ B).

Action To remove *heat*, resolve phlegm, and relieve cough and asthma.

Indications *Heat* in the lung with chronic cough, dyspnea, profuse sputum, feeling of stuffiness and pain in the chest and costal regions; chronic bronchitis with above symptoms.

Usage and dosage 3 g, 1-2 times a day.

Strength 15 g per pack

Storage Preserve in tightly closed containers, protected from moisture.

Wuwei Shexiang Wan
(五味麝香丸)

Wuwei Shexiang Pills

Wuwei Shexiang Pills are prescription used by Tibetan Nationality.

Ingredients Moschus 10 g; Fructus Chebulae (cored) 300 g; Radix Aconiti Balfourii 300 g; Radix Aucklandiae 100 g; Rhizoma Acori Calami 60 g.

Procedure Pulverize the above ingredients, except Moschus, to fine powder. Triturate Moschus with the above fine powder, sift and mix thoroughly. Make pills with aqueous solution saturated with Benzoinum and dry at a lower temperature.

Description Brown watered pills; odour, aromatic, characteristic of Moschus; taste, slightly bitter, astringent and numb.

Identification (1) Microscopical: Fibre layers of pericarp pale yellow, obliquely crisscrossed, walls thin and pitted. Stone cells rectangular or subsquare, with slightly thickened walls. Oil cells rounded, about 50 μm in diameter, containing yellow or yellowish-brown oily contents.
(2) Pulverize 3 g of the pills, add 10 ml of ethanol, ultrasonicate for 20 minutes, and use the supernatant as the test solution. Dissolve gallic acid CRS in ethanol to produce a solution containing 0.5 mg per ml as the reference solution. Carry out the method for thin layer chromatography (Appendix Ⅵ B), using silica gel G sodium carboxymethyl cellulose as the coating substance and a mixture of chloroform, ethyl acetate and formic acid (6 : 4 : 1) as the mobile phase. Apply separately 10 μl of the test solution and 5 μl of the reference solution to the plate. After developing and removal of the plate, dry in air, spray with 2% ferric chloride in ethanol. The spot in the chromatogram obtained with the test solution corresponds in position and colour to the spot in the chromatogram obtained with the reference solution.
(3) Pulverize 2 g of the pills, add 10 ml of chloroform, ultrasonicate for 20 minutes, filter, and evaporate the filtrate to 2 ml as the test solution. Prepare a solution of 0.5 g of Radix Aucklandiae reference drug in the same manner as the reference drug solution. Carry out the method for thin layer chromatography (Appendix Ⅵ B), using silica gel G mixed with sodium carboxymethyl cellulose as the coating substance and a mixture of petroleum ether (60-90℃) and ethyl acetate (5 : 1) as the mobile phase. Apply separately 10 μl of each of the test solution and the reference drug solution to the plate. After developing and removal of the plate, dry in air, spray with 5% vanillin in sulfuric acid, heat at 105℃ to the spots clear. The spots in the chromatogram obtained with the test solution correspond in position and colour to the spots in the chromatogram obtained with the reference drug solution.
(4) Pulverize 2 g of the pills, add 30 ml of ether, heat under reflux for 30 minutes, filter, evaporate the filtrate to dryness and dissolve the residue in 2 ml of methanol as the

test solution. Prepare a solution of 0.5 g of Rhizoma Acori Calami reference drug in the same manner as the reference drug solution. Carry out the method for thin layer chromatography (Appendix Ⅵ B), using silica gel G mixed with sodium carboxymethyl cellulose as the coating substance and a mixture of petroleum ether (60-90℃) and ethyl acetate (4 : 1) as the mobile phase. Apply separately 10 μl of each of the test solution and the reference drug solution to the plate. After developing and removal of the plate, dry in air, and examine under ultraviolet light at 254 nm. The fluorescent spots in the chromatogram obtained with the test solution correspond in position and colour to the spots in the chromatogram obtained with the reference drug solution.

Limit test for aconitine Pulverize 5 g of the pills, add concentrated ammonia to moisten, add 20 ml of chloroform, allow to stand for overnight, filter, evaporate the filtrate to dryness, dissolve the residue in 2 ml of dehydrated ethanol as the test solution. Dissolve aconitine CRS in dehydrated ethanol to produce a solution containing 1 mg per ml as the reference solution. Carry out the method for thin layer chromatography (Appendix Ⅵ B), using silica gel G mixed with 1% solution of sodium hydroxide as the coating substance and a mixture of chloroform and methanol (7 : 1) as the mobile phase. Apply separately 10 μl of the test solution and 5 μl of the reference solution to the plate. After developing and removal of the plate, dry in air, spray with diluted solution of potassium heptaiodobismuthate TS. The spot in the chromatogram obtained with the test solution is not more intense or no spot appear in position and colour than the spot in chromatogram obtained with the reference solution.

Other requirements Comply with the general requirements for pills (Appendix Ⅰ A).

Action To counteract inflammation, alleviate pain and relieve rheumatic condition.

Indications Tonsillitis, pharyngitis, influenza, anthrax, rheumatic arthritis, neuralgia, gastralgia and toothache.

Usage and dosage 2-3 pills, once a day before going to bed, or buccal use, maximum dose: 5 pills.

Precaution Be cautious about its toxicity, contraindicated in pregnancy.

Strength 0.3 g per 10 pills

Storage Preserve in tightly closed containers.

Wuzi Yanzong Wan
(五子衍宗丸)

Wuzi Yanzong Pills

Ingredients Fructus Lycii 400 g; Semen Cuscutae (stir-baked) 400 g; Fructus Rubi 200 g; Fructus Schisandrae Chinensis (steamed) 50 g; Semen Plantaginis (stir-baked with salt) 100 g.

Procedure Pulverize the above five ingredients to fine powder, sift and mix thoroughly. To each 100 g of the powder, add 35-50 g of refined honey and a quantity of water, make water-honeyed pills and dry; or add 80-90 g of refined honey to make small honeyed pills or big honeyed pills.

Description Deep brown water-honeyed pills, brownish-black small honeyed pills or big honeyed pills; taste, sweet, sour and slightly bitter.

Identification (1) Microscopical: Stone cells of testa irregular poly gonal in surface view, walls thickened, sinuous, striatfion well-defined. Stone cells of epidermis of testa pale yellowish-brown, subpolygonal in surface view, with relatively thickened walls and fine, dense pite-canals, lumina containing dark brown contents. Palisade cells of testa in 2 rows, the inner row longer than the outer one, with a light line. Endocuticula cells of testa subrectangular in surface view, with slightly sinuous walls, parqueted in groups of several cells. Nonglandular hairs unicellular, with thickened, lignified walls, and the remains after falling off simillar to stone cells in shape.

(2) Pulverize 5 g of the water-honeyed pills to fine powder, or cut 5 g of the small honeyed pills or big-honeyed pills into pieces and mix well with 5 g of kieseghul, add 50 ml of ether, ultrasonicate for 20 minutes, filter, evaporate the filtrate to dryness, dissolve the residue in 1 ml of ethyl acetate as the test solution. To 1 g of Fructus Lycii reference drug, add 2 g of kieseghul, mix well, and add 20 ml of ether in the same manner as the reference drug solution. Carry out the method for thin layer chromatography (Appendix Ⅵ B), using silica gel G as the coating substance and a mixture of petroleum ether (30-60℃), ethyl formate and formic acid (20 : 20 : 0.1) as the mobile phase. Apply separately 5 μl of the test solution and the reference drug solution to the plate. After developing and removal of the plate, dry in air, examine under the ultraviolet light at 365 nm. The spots in the chromatogram obtained with the test solution correspond in position and colour to the spots in the chromatogram obtained with the reference drug solution.

(3) To the drug residue obtained with the Identificafion (2), add 40 ml of chloroform, ultrasonicate for 20 minutes, filter, evaporate the filtrate to dryness and dissolve the residue in 1 ml of ethyl acetate as the test solution. Dissolve deoxyschizandrin CRS in ethyl acetate to produce a solution containing 1 mg per ml as the reference solution. Carry out the method for thin layer chromatography (Appendix Ⅵ B), using silica gel GF_{254} as the coating substance and the upper layer of a mixture of petroleum ether, ethyl formate and formic acid (15 : 5 : 1) as the mobile phase. Apply separately 2 μl of each of the two solutions to the plate. After developing and removal of the plate, dry in air, examine under ultraviolet light at 254 nm. The spot in the chromatogram obtained with the test solution corresponds in position and colour to the spot in the chromatogram obtained with the reference solution.

Other requirements Comply with the general requirements for pills (Appendix Ⅰ A).

Action To replenish *kidney-essence*.

Indications Impotence, infertility, seminal emission, premature ejaculation, lower back pain and dribbling of urine after micturition due to a deficiency of *kidney-essence*.

Usage and dosage 6 g of watered-honeyed pills, 9 g of small honeyed pills or 1 big honeyed pill, twice a day.

Strength 9 g per big honeyed pill

Storage Preserve in tightly closed containers.

Xiangfu Wan
(香附丸)

Xiangfu Pills

Ingredients Rhizoma Cyperi (processed with vinegar) 300 g; Radix Angelicae Sinensis 200 g; Rhizoma Chuanxiong 50 g; Radix Paeoniae Alba (stir-baked) 100 g; Radix Rehmanniae Praeparata 100 g; Rhizoma Atractylodis Macrocephalae (stir-baked) 100 g; Fructus Amomi 25 g; Pericarpium Citri Reticulatae 50 g; Radix Scutellariae 50 g.

Procedure Pulverize the above nine ingredients to fine powder, sift and mix well. To each 100 g of powder add 35-45 g of refined honey and a quantity of water to make water-honeyed pills, dry and coat with corn protein; or to each 100 g of powder add 130-140 g of refined honey to make big honeyed pills.

Description Brown water-honeyed pills or big honeyed pills; odour, aromatic; taste, slightly sweet, slightly bitter and pungent.

Identification (1) Microscopical: Clusters of calcium oxalate 18-32 μm in diameter, occurring in parenchymatous cells, usually in rows, or several clusters in one cell. Prisms of calcium oxalate abundant in parenchyma. Needle crystals of calcium oxalate minute, 10-32 μm long, filling irregularly in parenchymatous cells. Parenchyma greyish-brown to blackish-brown, cells mostly shrunken, and each containing a brown nucleus-like mass. Parenchymatous cells fusiform, walls slightly thickened, with very fine and oblique crisscross striations. Sclerenchymatous cells of endotesta yellowish-brown or brownish-red, subpolygonal in surface view, walls thickened, lumina containing silica bodies. Secretory cells subrounded, containing pale yellowish-brown to reddish-brown secretions with adjacent cells arranged in radiation. phloem fibres pale yellow, fusiform, walls thickened, with fine pit-canals.

(2) Triturate 2 g of the water-honeyed pills, add 10 ml of petroleum ether (30-60℃), or triturate well 4.5 g of the big honeyed pills with 3 g of kieselguhr, add 25 ml of petroleum ether (30-60℃). Macerate for 30 minutes by shaking frequently, filter, remain the drug residue for later use and evaporate the filtrate to dryness. Dissolve the residue in 1 ml of ethyl acetate as the test solution. Dissolve α-cyperone CRS in ethyl acetate to produce a solution containing 1 mg per ml as the reference solution. Carry out the method for thin layer chromatography (Appendix Ⅵ B), using silica gel G as the coating substance and a mixture of *n*-hexane and ethyl acetate (17 : 3) as the mobile phase. Apply separately to the plate 5 μl of each of the two solutions. After developing and removal of the plate, dry in air, spray with alcoholic dinitrophenylhydrazine TS and allow to stand for a while. The orange-red spot in the chromatogram obtained with the test solution corresponds in position and colour to the spot in the chromatogram obtained with the reference solution.

(3) To the remaining residue after petroleum ether extraction, obtained in the test for Identification (2), add 25 ml of methanol, ultrasonicate for 20 minutes, filter and evaporate the filtrate to dryness. Dissolve the residue in 1 ml of methanol as the test solution. Dissolve baicalin CRS in methanol to produce a solution containing 1 mg per ml as the reference solution. Carry out the method for thin layer chromatography (Appendix Ⅵ B), using silica gel G mixed with sodium carboxymethylcellulose prepared with a 4% solution of sodium acetate as the coating substance and a mixture of ethyl acetate, butanone, formic acid and water (5 : 3 : 1 : 1) as the mobile phase. Apply in strips separately 10 μl of each of the two solutions to the plate. After developing and removal of the plate, dry in air, spray with 1% ferric chloride in ethanol. The strip in the chromatogram obtained with the test solution corresponds in position and colour to the strip in the chromatogram obtained with the reference solution.

(4) To 0.2 g of Pericarpium Citri Reticulatae reference drug add 1 ml of methanol, ultrasonicate for 15 minutes, allow to stand and use the supernatant as the reference drug solution. Dissolve hesperidin CRS in methanol to produce a saturated solution as the reference solution. Carry out the method for thin layer chromatography (Appendix Ⅵ B), using silica gel G prepared with a 0.5% solution of sodium hydroxide as the coating substance. Apply separately 5 μl of the test solution obtained in the test of Identification (3) and 2 μl of each of the reference durg solution and the reference solution to the plate, and a mixture of ethyl acetate, methanol and water (100 : 17 : 13) as the mobile phase. After developing about 3 cm, removal of the plate, dry in air. Use the upper layer of a mixture of toluene, ethyl acetate, formic acid and water (20 : 10 : 1 : 1) as the mobile phase, After developing about 8 cm and removal of the plate, dry in air. Spray with 1% aluminium chloride in ethanol and examine under ultraviolet light at 365nm. The yellow to yellowish-green fluorescent spot in the chromatogram obtained with the test solution corresponds in position and colour to the spot in the chromatogram obtained with the reference solution. A yellow to yellowish-green fluorescent spot and three brilliant blue fluorescent spots in the chromatogram obtained with the test solution correspond in position and colour to the spots in the chromatogram obtained with the reference drug solution.

Other requirements Comply with the general requirements for pills (Appendix Ⅰ A).

Action To soothe the liver and invigorate the spleen, and nourish blood to regulate menstruation.

Indications Menstrual disorders before or after periods due to stagnation of *liver-qi*, a deficiency of blood and failure of the spleen in transport action, with manifestations of irregular menstrual cycles, hypermenorrhea or hypomenorrhea with clots, constriction in the chest before menstruation, restlessness, distending pain in the breasts and loss of appitite.

Usage and dosage 9-13 g of water-honeyed pills, 1 or 2 big honeyed pills, twice a day, taken with yellow rice wine or warm boiled water.

Strength 1 g per 10 water-honeyed pills, 9 g per big honeyed pill

Storage Preserve in tightly closed containers.

Xiangfu Wan (Shuiwan)
(香附丸)

Xiangfu Pills

Ingredients Rhizoma Cyperi (processed with vinegar) 300 g; Radix Angelicae Sinensis 200 g; Rhizoma Chuanxiong 50 g; Radix Paeoniae Alba (stir-baked) 100 g; Radix Rehmanniae Preparata 100 g; Rhizoma Atractylodis Macrocephalae (stir-baked) 100 g; Fructus Amomi 25 g; Pericarpium Citri Reticulatae 50 g; Radix Scutellariae 50 g.

Procedure Pulverize the above nine ingredients to fine powder, sift and mix well. Make watered pills with a quantity of yellow rice wine, dry at a lower temperature.

Description Dark yellow to dark brown watered pills; odour, aromatic; taste, bitter and pungent.

Identification (1) Microscopical: Clusters of calcium oxalate 18-32 μm in diameter, occurring in parenchymatous cells, usually in rows, or several clusters in one cell. Prisms of calcium oxalate abundant in parenchyma. Needle crystals of calcium oxalate minute, 10-32 μm long, filling irregularly in parenchymatous cells. Parenchyma greyish-brown to blackish-brown, cells mostly shrunken, and each containing a brown nucleus-like mass. Parenchymatous cells fusiform, walls slightly thickened, with very fine and oblique crisscross striations. Sclerenchymatous cells of endotesta yellowish-brown or brownish-red, subpolygonal in surface view, walls thickened, lumina containing silica bodies. Secretory cells subrounded, containing pale yellowish-brown to reddish-brown secretions, with adjacent cells arranged in radiation. phloem fibers pale yellow, fusiform, walls thickened, with fine pit-canals.
(2) Triturate 2 g of the pills, Macerate in 10 ml of petroleum ether (30-60℃), for 30 minutes by shaking frequently, filter, remain the residue for later use and evaporate the filtrate to dryness. Dissolve the residue in 1 ml of ethyl acetate as the test solution. Dissolve α-cyperone CRS in ethyl acetate to produce a solution containing 1 mg per ml as the reference solution. Carry out the method for thin layer chromatography (Appendix Ⅵ B), using silica gel G as the coating substance and a mixture of *n*-hexane and ethyl acetate (17 : 3) as the mobile phase. Apply separately to the plate 5 μl of each of the two solutions. After developing and removal of the plate, dry in air, spray with alcoholic dinitrophenylhydrazine TS and allow it to stand for a while. The orange-red spot in the chromatogram obtained with the test solution corresponds in position and colour to the spot in the chromatogram obtained with the reference solution.
(3) To the remaining residue after petroleum ether extraction, obtained in the test of Identification (2), add 25 ml of methanol, ultrasonicate for 20 minutes, filter and evaporate the filtrate to dryness. Dissolve the residue in 2 ml of methanol as the test solution. Dissolve baicalin CRS in methanol to produce a solution containing 1 mg per ml as the reference solution. Carry out the method for thin layer chromatography (Appendix Ⅵ B), using silica gel G mixed with sodium carboxymethylcellulose prepared with 4% solution of sodium acetate as the coating substance and a mixture of ethyl acetate, butanone, formic acid and water (5 : 3 : 1 : 1) as the mobile phase. Apply in strips separately 10 μl of each of the two solutions to the plate. After developing and removal of the plate, dry in air, spray with 1% ferric chloride in ethanol. The strip in the chromatogram obtained with the test solution corresponds in position and colour to the strip in the chromatogram obtained with the reference solution.
(4) To 0.2 g of Pericarpium Citri Reticulatae reference drug add 1 ml of methanol, ultrasonicate for 15 minutes, allow to stand and use the supernatant as the reference drug solution. Dissolve hesperidin CRS in methanol to produce a saturated solution as the reference solution. Carry out the method for thin layer chromatography (Appendix Ⅵ B), using silica gel G prepared with a 0.5% solution of sodium hydroxide as the coating substance. Apply separately 5 μl of the test solution obtained in the test of Identification (3) and 2 μl of each of the reference durg solution and the reference solution to the plate, and a mixture of ethyl acetate, methanol and water (100 : 17 : 13) as the mobile phase. After developing about 3 cm, removal of the plate, and dry in air. Use the upper layer of a mixture of toluene, ethyl acetate, formic acid and water (20 : 10 : 1 : 1) as the mobile phase After developing about 8 cm, removal of the plate, and dry in air. Spray with a 1% solution of aluminium chloride in ethanol and examine under ultraviolet light at 365 nm. The brilliant yellow to brilliant yellowish-green fluorescent spot in the chromatogram obtained with the test solution corresponds in position and colour to the spot in the chromatogram obtained with the reference solution. The three brilliant blue fluorescent spots in the chromatogram obtained with the test solution correspond in position and colour to the spots in the chromatogram obtained with the reference drug solution.

Other requirements Comply with the general requiremenets for pills (Appendix Ⅰ A).

Action To soothe the liver and invigorate the spleen, and nourish blood to regulate menstruation.

Indications Menstrual disorders before or after periods due to stagnation of *liver-qi*, a deficiency of blood and failure of the spleen in transportaction, with manifestations of irregular menstrual cycles, hypermenorrhea or hypomenorrhea with clots, constriction in the chest before menstruation, restlessness, distending pain in the breasts and anorexia.

Usage and dosage 6-9 g, twice a day, taken with yellow rice wine or warm boiled water.

Storage Preserve in tightly closed containers.

Xianglian Pian
(香连片)

Xianglian Tablets

Ingredients Rhizoma Coptidis (processed with Fructus Evodiae); Radix Aucklandiae

Procedure Distil volatile oil from Radix Aucklandiae, collect the volatile oil, filter the aqueous solution, concentrate the filtrate to a thick extract, dry and pulverize to fine powder. Heat Rhizoma Coptidis with 70% of ethanol at 75-80℃ under a reflux condenser for three times, 2 hours for the first time, each 1 hour for other times respectively. Recover ethanol from the combined extracts, concentrate to a thick extract, dry and pulverize to fine powder. Mix a quantity of excipient with the combined powder, make granules and dry. Mix the volatile oil of Radix Aucklandiae with the granules by spraying, press into tablets and coat with sugar or film.

Description Sugar or film coated tablets with yellowish-brown core; odour, slight; taste, bitter.

Identification (1) Triturate 10 tablets, removed the coats, to powder, heat under reflux with 10 ml of chloroform for 20 minutes, filter and evaporate the filtrate to dryness. Disslove the residue in 2 ml of ethanol to produce a solution as the test solution. Dissolve 0.1 ml of costustroot essential oil reference extractive in 10 ml of ethanol and use the solution as the reference solution. Carry out the method for thin layer chromatography (Appendix Ⅵ B), using silica gel G as the coating substance and a mixture of chloroform and ethyl acetate (10 : 1) as the mobile phase. Apply separately 4 μl of each of the two solutions to the plate. After developing and removal of the plate, dry in air, spray with 5% vanillin in sulfuric acid. The spots in the chromatogram obtained with the test solution correspond in position and colour to the spots in the chromatogram obtained with the reference solution.
(2) Dissolve berberine hydrochloride CRS in a mixture of hydrochloric acid and methanol (1 : 100) to produce a solution containing 1 mg per ml as the reference solution. Carry out the method for thin layer chromatography

(Appendix Ⅵ B), using silica gel G mixed with sodium carboxy methylcellulose as the coating substance and a mixture of *n*-butanol, glacial acetic acid and water (7 : 1 : 2) as the mobile phase. Apply separately 10 μl of the test solution obtained in the test for Assay and 5 μl of the reference solution to the plate. After developing and removal of the plate, dry in air, examine under ultraviolet light at 365 nm. The fluroscent spot in the chromatogram obtained with the test solution corresponds in position and colour to the spot in the chromatogram obtained with the reference solution.

Other requirements Comply with the general requirements for tablets (Appendix Ⅰ D).

Assay Weigh accurately 20 tablets, removed coats, and triturate. Weigh accurately a quantity of the powder, equivalent to about 60 mg of berberine hydrochloride, transfer to a Soxhet's extractor, heat on a water bath under a reflux condenser with a mixture of hydrochloric acid and methanol (1 : 100) until the extract becomes colourless and concentrate the extract if necessory. Transfer the extract to a 100 ml volumetric flask, rinse the container with a small quantity of the same mixture solution, combine the washing with the extract, dilute to volume with the mixture solution and mix well. Transfer 2 ml of the solution, measured accurately, to a 50 ml volumetric flask, dilute with methanol to volume, mix well and use the solution as the test solution. Dissolve berberine hydrochloride CRS, weighed accurately, in methanol to produce a solution containing 0.02 mg per ml as the reference solution. Carry out the method for thin layer chromatography (Appendix Ⅵ B), using silica gel G as the coating substance and a mixture of benzene, ethyl acetate, methanol, isopropanol and water (4 : 2 : 1 : 1 : 0.2) as the mobile phase. Apply accurately 2 μl of the test solution, 2 μl and 6 μl of the reference solution to the plate, separately. After developing the plate in a chamber pre-equilibrated with the vapour of an equal volumes of the mobile phase and concentrated ammonia TS for 15 minutes and develop to the distance 10 cm, remove the plate and dry in air. Carry out the method for thin layer chromatography (Appendix Ⅵ B, thin layer chromatography scanning method), scan with fluorescence mode at the wavelength of $\lambda_{ex}=366$ nm, measure the integration values of fluorescent absorbance from the test solution and the reference solution and calculate the content.
It contains not less than 20 mg of berberine hydrochloride ($C_{20}H_{18}ClNO_4$) for each big tablet and not less than 7.0 mg for each small tablet, referred to Rhizoma Coptidis.

Action To clear *heat* and resolve *dampness*, and move *qi* to kill pain.

Indications Dysentery due to *damp-heat* in the large intestine with manifestations of stools mixed with purulent blood, tenesmus, fever and abdominal pain; enteritis and bacillary dysentery with above symptoms.

Usage and dosage 5 big tablets, 3 times a day; 2-3 small tablets for children, 3 times a day.

Storage Preserve in tightly closed containers.

Xianglian Wan
(香连丸)

Xianglian Pills

Ingredients Rhizoma Coptidis (processed with Fructus Evodiae) 800 g; Radix Aucklandiae 200 g.

Procedure Pulverize the above two ingredients to fine powder, sift and mix thoroughly. To each 100 g of the powder add 8 g of vinegar and a quantity of water to make pills, and dry.

Description Pale yellow to yellowish-brown watered pills; odour, slight; taste, bitter.

Identification (1) Microscopical: Inulin masses irregular, fine radiate striations sometimes visible, dissolved on heating. Reticulated vessels up to 90 μm in diameter. Fibre bundles bright yellow, walls slightly thickened, and pits distinct.
(2) To about 60 mg of the powdered pills, add 5 ml of methanol, heat under reflux on a water bath for 15 minutes, filter and dilute the filtrate to 5 ml with methanol as the test solution. Prepare a solution of 0.05 g of Rhizoma Coptidis reference drug as the reference drug solution in the same manner. Dissolve berberine hydrochloride CRS in methanol to produce a solution containing 0.5 mg per ml as the reference solution. Carry out the method for thin layer chromatography (Appendix Ⅵ B), using silica gel G as the coating substance and a mixture of benzene, ethyl acetate, methanol, isopropanol and concentrated ammonia TS (12 : 6 : 3 : 3 : 1) as the mobile phase. Apply separately 1 μl of each of the three solutions to the plate. After developing and removal of the plate, dry in air and examine under ultraviolet light at 365 nm. The yellow fluorescent spots in the chromatogram obtained with the test solution correspond in position and colour to the spots in the chromatogram obtained with the reference drug solution; a yellow fluorescent spot in the chromatogram obtained with the test solution corresponds to the spot in the chromatogram obtained with the reference solution.
(3) To 2 g of the powdered pills add 15 ml of ether, allow to stand for 2 hours, shake frequently, filter and evaporate the filtrate to dryness. Disslove the residue in 0.5 ml of ethyl acetate as the test solution. Prepare a solution of 0.4 g of Radix Aucklandiae reference drug as the reference drug solution in the same manner. Carry out the method for thin layer chromatography (Appendix Ⅵ B), using silica gel G as the coating substance and a mixture of cyclohexane and acetone (10 : 3) as the mobil phase. Apply separately 10 μl of each of the two solutions to the plate. After developing and removal of the plate, dry in air, spray with 5% vanillin in sulfuric acid and heat at 105℃ for 5 minutes. The purplish-red to purplish-blue spots in the chromatogram obtained with the test solution correspond in position and colour to the spots in the chromatogram obtained with the reference drug solution.

Other requirements Comply with the general requirements for pills (Appendix Ⅰ A).

Assay Pulverize a quantity of the pills to the fine powder, weigh accurately 0.2 g of the powder to a Soxhlet's extractor, add a quantity of a mixture of hydrochloric acid and methanol (1 : 100) until the extracts become colourless, transfer the extracts to a 100 ml volumetric flask, wash the containers with small quantities of the above solution and transfer the washings to the same volumetric flask, dilute with the above mixture solution to the volume, mix well. Measure accurately 10 ml of the solution to a 50 ml volumetric flak, dilute with methanol to the volume, mix well as the test solution. Dissolve a quantity of berberine hydrochloride CRS, and weigh accurately, in methanol to prepare a reference solution containing 20 μg per ml. Carry out the method for thin layer chromatography (Appendix Ⅵ B), using silica gel G as the coating substance and a mixture of toluene, ethyl acetate, isopropanol, methanol and water (4 : 2 : 1 : 1 : 0.2) as the mobile phase. Apply accurately to the plate 4 μl of the test solution, 2 μl and 6 μl of the reference solution alternatively. After developing the plate in a chamber pre-equilibrated with the vapour of an equal volumes of the mobile phase and concentrated ammonia TS

for 15 minutes, develop to the distance 10 cm, and removal of the plate, dry in air. Carry out the method for thin layer chromatography (Appendix Ⅵ B thin layer chromatographic scanning method), scan with the fluorescent mode at the wavelength of $\lambda_{ex}=366$ nm. Measure the integration values of the fluorescent absorbance from the test solution and the reference solution respectively, and calculate the content.
It contains not less than 27 mg of berberine hydrochloride ($C_{20}H_{18}ClNO_4$) per gram, referred to Rhizoma Coptidis.

Action To clear *heat* and resolve *dampness*, and move *qi* to kill pain.

Indications Dysentery due to *damp-heat* in the large intestine with manifestations of stools mixed with purulent blood, tenesmus, fever and abdominal pain; enteritis and bacillary dysentery with above symptoms.

Usage and dosage 3-6 g, 2-3 times a day; appropriate reduction of the dosage for children.

Storage Preserve in tightly closed containers, protected from moisture.

Xiangsha Liujun Wan
(香砂六君丸)

Xiangsha Liujun Pills

Ingredients Radix Aucklandiae 70 g; Fructus Amomi 80 g; Radix Codonopsis 100 g; Rhizoma Atractylodis Macrocephalae (stir-baked) 200 g; Poria 200 g; Radix et Rhizoma Glycyrrhizae Praeparata Cum Melle, 70 g; Pericarpium Citri Reticulatae 80 g; Rhizoma Pinelliae (processed) 100 g.

Procedure Pulverize the above eight ingredients to fine powder, sift and mix thoroughly. Decoct 10 g of Rhizoma Zingiberis Recens and 20 g of Fructus Jujubae with water for several times, filter, make pills with the decoction and the powder, dry at a lower temperature.

Description Yellowish-brown watered pills; odour, slightly aromatic; taste, slightly sweet and pungent.

Identification (1) Microscopical: Irregular branched masses colourless, dissolved in chloral hydrate TS; hyphae colourless or pale brown, 4-6 μm in diameter. Anastomosing laticiferous tubes 12-15 μm in diameter, containing fine granules. Sclerenchymatous cells of endotesta yellowish-brown or brownish-red, subpolygonal in surface view, walls thickened, lumina containing silica body. Needle crystals of calcium oxalate in bundles, 32-144 μm long, occurring in mucilage cells or scattered. Fibre bundles surrounded by parenchymatous cells containing prisms of calcium oxalate forming crystal fibres.
(2) Grind 5 g of the pills, add 30 ml of ether, heat under reflux on a water bath for 30 minutes and filter. Evaporate the filtrate to dryness, dissolve the residue in 0.5 ml of ethyl acetate as the test solution. Prepare a solution with 0.5 g of Radix Aucklandiae reference drug and 15 ml of ether as the reference drug solution in the same manner. Carry out the method for thin layer chromatography (Appendix Ⅵ B), using silica gel G as the coating substance and a mixture of cyclohexane-acetone (10 : 3) as the mobile phase. Apply separately to the plate 2 μl of the test solution and 1 μl of the reference drug solution. After developing and removal of the plate, dry in air, spray with 5% vanillin in sulfuric acid, heat to the spots clear. The two purplish-red to purplish-blue spots in the chromatogram obtained with the test solution correspond in position and colour to the spots in the chromatogram obtained with the reference drug solution.
(3) Grind 12 g of the pills, add 15 ml of ethanol, ultrasonicate for 30 minutes, filter and use the filtrate as the test solution. Dissolve hesperidin CRS in methanol to produce a saturated solution as the reference solution. Carry out the method for thin layer chromatography (Appendix Ⅵ B), using polyamide film as the coating substance and a mixture of chloroform, acetone and methanol (5 : 1 : 1) as the mobile phase. Apply separately 2 μl of each of the two solutions to the plate. After developing and removal of the plate, dry in air, spray with 1% aluminium chloride in methanol, dry with a current of hot air and examine under ultraviolet light at 365 nm. The fluorescent spot in the chromatogram obtained with the test solution corresponds in position and colour to the spot in the chromatogram obtained with the reference solution.
(4) Pulverize 5 g of the pills to fine powder, add 20 ml of ethyl acetate, ultrasonicate for 15 minutes, filter, evaporate the filtrate to dryness and dissolve the residue in 2 ml of chloroform as the test solution. Prepare a solution of 0.5 g of Rhizoma Atractylodis Macrocephalae reference drug and 10 ml of ethyl acetate in the same manner as the reference drug solution. Carry out the method for thin layer chromatography (Appendix Ⅵ B), using silica gel GF_{254} as the coating substance and a mixture of cyclohexane, toluene and ethyl acetate (14 : 3 : 3) as the mobile phase. Apply separately 10 μl of the test solution and the reference drug solution to the plate. After developing and removal of the plate, dry in air, examine under the ultraviolet light at 254 nm. The spots in the chromatogram obtained with the test solution correspond in position and colour to the spots in the chromatogram obtained with the reference drug solution.

Other requirements Comply with the general requirements for pills (Appendix Ⅰ A).

Assay Carry out the method for high performance liquid chromatography (Appendix Ⅵ D).

Chromatographic system and system suitability Use octadecylsilane bonded silica gel as the stationary phase and a mixture of acetonitril and 0.2% solution of phosphoric acid (21 : 79) as the mobile phase. As detector a spectrophotometer set at 284 nm. The number of theoretical plates of the column is not less than 3000, calculated with the reference to the peak of hesperidin.

Reference solution Dissolve a quantity of hesperidin CRS, weigh accurately, in methanol to produce a solution containing 40 μg per ml.

Test solution To 10 g of the pills, weigh accurately, grind to the fine powder, weigh accurately 0.2 g to a conical flask with stopper, add accurately 25 ml of methanol, weigh, allow to stand for 2 hours, ultrasonicate (power, 300 W; frequency, 50 kHz) for 1 hour, allow to cool, weigh again, replenish the lost weight in methanol, mix well, filter, use the successive filtrate as the test solution.

Procedure Inject accurately 10 μl of each of the reference solution and the test solution into the column, and calculate the content.
It contains not less than 4.0 mg of hesperidin ($C_{28}H_{34}O_{15}$) per gram, referred to Pericarpium Citri Reticulatae.

Action To replenish *qi* and invigorate the spleen, and harmonize the stomach.

Indications Indigestion, belching and poor appetite, fullness in the stomach and abdomen and loose stools due to deficiency in the spleen and stagnation of *qi*.

Usage and dosage 6-9 g, 2-3 times a day.

Storage Preserve in tightly closed containers.

Xiangsha Yangwei Wan
(香砂养胃丸)

Xiangsha Yangwei Pills

Ingredients Radix Aucklandiae 210 g; Fructus Amomi 210 g; Rhizoma Atractylodis Macrocephalae 300 g; Pericarpium Citri Reticulatae 300 g; Poria 300 g; Rhizoma Pinelliae (processed) 300 g; Rhizoma Cyperi (processed with vinegar) 210 g; Fructus Aurantii Immaturus (stir-baked) 210 g; Fructus Amomi Rotundus (peeled) 210 g; Cortex Magnoliae Officinalis (processed with ginger) 210 g; Herba Pogostemonis 210 g; Radix et Rhizoma Glycyrrhizae 90 g.

Procedure Pulverize the above twelve ingredients to fine powder, sift and mix thoroughly. Decoct 90 g of sliced Rhizoma Zingiberis Recens and 150 g of Fructus Jujubae with water for several times, filter and make pills with the filtrate and the powder. Coat with a mixture of talcum powder, equivelent to 5% of total amount of drug, and equal amount of ferroferric oxide, and dry at a lower temperature.

Description Black waterd pills with dark brown core; odour, slight; taste, pungent, slightly bitter.

Identification (1) Microscopical: Irregularly branched masses colourless, dissolved in chloral hydrate TS; hyphae colourless or pale brown, 4-6 μm in diameter. Prisms of calcium oxalate abundant in parenchyma. Needle crystals of calcium oxalate fine, 10-32 μm long, irregularly filled in parenchymatous cells. Needle crystals of calcium oxalate in bundles, 32-144 μm long, occurring in mucilage cells, or scattered. Sclerenchymatous cells of endotesta yellowish-brown or brownish-red, subpolygonal in surface view, walls thickened, lumina containing silica bodies. Secretory cells subrounded, containing reddish-brown contents, surrounded by cells radially arranged. Nonglandular hairs 1-6-celled, with warty walls. Fibre bundles surrounded by cells containing prisms of calcium oxalate, forming crystal fibres. (2) Pulverize 8 g of the pills, add 30 ml of petroleum ether (30-60℃), heat under reflux on a water bath for 30 minutes, filter and evaporate the filtrate to dryness. Dissolve the residue in 1 ml of ethyl acetate as the test solution. To 0.5 g of Fructus Amomi Rotundus reference drug and 0.5 g of Radix Aucklandiae reference drug add 15 ml of petroleum ether (30-60℃) respectively and prepare two solutions as the reference drug solutions in the same manner. Dissolve magnolol CRS and honokiol CRS in ethyl acetate to produce a mixture containing 2 mg and 1 mg respectively per ml as the reference solution. Carry out the method for thin layer chromatography (Appendix Ⅵ B), using silica gel GF_{254} as the coating substance and a mixture of cyclohexane and acetone (10 : 3) as the mobile phase. Apply separately 2 μl each of the four solutions to the plate. After developing and removal of the plate, dry in air and examine under ultraviolet light at 365 nm. The blue fluorescent spots in the chromatogram obtained with the test solution correspond in position and colour to the spots in the chromatogram obtained with the solution of Fructus Aurantii Immaturus reference drug. Examine under ultraviolet light at 254 nm, the spots in the chromatogram obtained with the test solution correspond in position and colour to the spots in the chromatogram obtained with the reference solution. Spray with 5% vanillin in sulfuric acid, heat to the spots clear and examine in sunlight. The purplish-red to purplish-blue spots in the chromatogram obtained with the test solution correspond in position and colour to the spots in the chromatogram obtained with the solution of Radix Aucklandiae reference drug.

(3) Dissolve α-cyperone CRS in ethyl acetate to produce a solution containing 1 mg per ml as the reference solution. Carry out the method for thin layer chromatography (Appendix Ⅵ B), using silica gel G as the coating substance and a mixture of benzene, ethyl acetate and glacial acetic acid (60 : 1 : 1) as the mobile phase. Apply separately 2 μl of the reference solution and 4 μl of the test solution obtained in the test for Identification (2) to the plate. After developing and removal of the plate, dry in air, spray with 5% ferric chloride in ethanol which acidified with hydrochloric acid and heat at 105℃ to the spots clear. The spot in the chromatogram obtained with the test solution corresponds in position and colour to the spot in the chromatogram obtained with the reference solution.

Other requirement Comply with the general requirements for pills (Appendix Ⅰ A).

Assay Carry out the method for high performance liquid chromatography (Appendix Ⅵ D).

Chromatographic system and system suitability Use octadecylsilane bonded silica gel as the stationary phase and a mixture of acetonitrile, water and glacial acetic acid (60 : 38 : 2) as the mobile phase. As detector a spectrophotometer set at 294 nm. The number of theoretical plates of the column is not less than 1500, calculated with the reference to the peak of magnolol.

Reference solution Dissolve a quantity of magnolol CRS and honokiol CRS, weighed accurately, in methanol to produce a mixture containg 0.1 mg and 60 μg respectively per ml.

Test solution Triturate a quantity of the pills to fine powder, sift with No. 3 sifter, place 2.5 g of the powder, weighed accurately, in a Soxhet's extractor, heat under reflux with a quantity of methanol for 3 hours and evaporate the extract to dryness. Dissolve the residue in methanol, transfer to a 25 ml volumetric flask, dilute with methanol to the volume. mix well, filter and use the successive filtrate.

Procedure Inject accurately 10 μl of each of the reference solution and the test solution, into the column and calculate the content.

It contains not less than 1.2 mg of the amount of magnolol ($C_{18}H_{18}O_2$) and honokiol ($C_{18}H_{18}O_2$) per gram, referred to Cortex Magnoliae officinalis.

Other requirements Comply with the general requirements for pills (Appendix Ⅰ A).

Action To warm the *middle-energizer* to harmonize the stomach.

Indications Stomachache, fullness in the stomach due to a deficiency of *stomach-yang* and *qi* stagnation from retained *dampness*, with manifestations of dull pain, stuffiness and discomfort in the stomach, casting up of gastric acid, loss of appitite and lassitude.

Usage and dosage 9 g, twice a day.

Storage Preserve in tightly closed containers.

Xiangsha Zhizhu Wan
(香砂枳术丸)

Xiangsha Zhizhu Pills

Ingredients Radix Aucklandiae 150 g, Fructus Aurantii (stir-baked with bran) 150 g; Fructus Amomi 150 g; Rhizoma Atractylodis Macrocephalae (stir-baked with bran) 150 g.

Procedure Pulverize the above four ingredients to fine powder,

sift, mix thoroughly, make pills with water, and dry.

Description Yellowish-brown watered pills; odour, slightly aromatic; taste, bitter, slightly pungent.

Identification (1) Microscopical: Sclerenchymatous cells of endotesta yellowish-brown or brownish-red, subpolygonal in surface view, walls thickened, lumen containing a silica body. Needle crystals of calcium oxalate minute, 10-32 μm long, irregularly aggregated in parechymatous cells.
(2) Grind 3 g of the pills to fine powder, add 8 ml of *n*-hexane, ultrasonicate for 15 minutes, filter and use the filtrate as the test solution. Prepare a solution of 1 g of Rhizoma Atractylodis Macrocephalae reference drug as the reference drug solution in the same manner. Carry out the method for thin layer chromatography (Appendix Ⅵ B), using silica gel G as the coating substance and a mixture of petroleum ether (60-90℃) and ethyl acetate (50 : 1) as the mobile phase. Apply separately 5-10 μl of each of the two solutions to the plate. After developing and removal of the plate, dry in air, spray with 5% vanillin in sulfuric acid and heat to the spots clear. The spots in the chromatogram obtained with the test solution correspond in position and colour to the spots in the chromatogram obtained with the reference drug solution.
(3) Pulverize 2 g of the pills to fine powder, add 10 ml of chloroform, ultrasonicate for 15 minutes, filter, and evaporate the filtrate to about 1 ml as the test solution. Prepare a solution of 0.5 g of Radix Aucklandiae reference drug in the same manner as the reference drug solution. Carry out the method for thin layer chromatography (Appendix Ⅵ B), using silica gel G mixed with sodium carboxymethyl cellulose as the coating substance and a mixture of cyclohexane and acetone (5 : 1) as the mobile phase. Apply separately 5 μl of the test solution and the reference drug solution to the plate. After developing and removal of the plate, dry in air, spray with 5% vanillin in sulphuric acid, and heat to the spots clear. The spots in the chromatogram obtained with the test solution correspond in position and colour to the spots in the chromatogram obtained with the reference drug solution.

Other requirements Comply with the general requirements for pills (Appendix Ⅰ A).

Assay Carry out the method for high performance liquid chromatography (Appendix Ⅵ D).

Chromatographic system and system suitability Use octadecylsilane bonded silica gel as the stationary phase and a mixture of acetonitril and 0.3% solution of phosphoric acid (20 : 80) as the mobile phase. As detector a spectrophotometer set at 283 nm. The number of theoretical plates of the column is not less than 2000, calculated with the reference to the peak of hesperidin.

Reference solution Dissolve a quantity of hesperidin CRS, weigh accurately, in methanol to produce a solution containing 40 μg per ml.

Test solution Grind a quantity of the pills to fine powder, weigh accurately 0.3 g, add accurately 50 ml of methanol, heat under reflux on a water bath for 1 hour, allow to cool, weigh again, replenish the lost weight with methanol, mix well, filter. Measure accurately 5 ml of the filtrate to a 25 ml volumetric flask, dilute with methanol to volume, and mix well.

Procedure Inject accurately 10 μl of the reference solution and 5-10 μl the test solution into the column, and calculate the content.
It contains not less than 10.0 mg of hesperidin ($C_{28}H_{34}O_{15}$) per gram, referred to Fructus Aurantii Immaturus.

Action To invigorate the spleen and promote appetite, and move *qi* to disperse masses.

Indications Fullness in the stomach and abdomen, loss of appitite, or loose stools due to a deficiency and stagnation of *spleen-qi*.

Usage and dosage 10 g, twice a day.

Precaution Avoid raw and cold foods.

Strength 10 g per pack

Storage Preserve in tightly closed containers.

Xiangsu Zhengwei Wan (香苏正胃丸)

Xiangsu Zhengwei Pills

Ingredients Herba Pogostemonis 80 g; Folium Perillae 160 g; Herba Elsholtziae 80 g; Pericarpium Citri Reticulatae 40 g; Cortex Magnoliae Officinalis (processed with ginger) 80 g; Fructus Aurantii (stir-baked) 20 g; Fructus Amomi 20 g; Semen Lablab Album (stir-baked) 40 g; Fructus Crataegi (stir-baked) 20 g; Massa Medicata Fermentata (stir-baked) 20 g; Fructus Hordei Germinatus (stir-baked) 20 g; Poria 20 g; Radix et Rhizoma Glycyrrhizae 11 g; Talcum 66 g; Cinnabaris 3.3 g.

Procedure Levigate Cinnabaris to very fine powder and pulverize the other ingredients to fine powder, triturate the above powder, sift and mix well. To each 100 g of powder add 120-150 g of refined honey to make big honeyed pills.

Description Blackish-brown big honeyed pills; taste, slightly sweet, slightly sour and bitter.

Identification (1) Microscopical: Irregular branched masses colourless, dissolved in chloral hydrate TS; hyphae colourless or pale brown, 4-6 μm in diameter. Prisms of calcium oxalate abundant in parenchyma. Mesophyll containing fine clusters of calcium oxalate, 4-8 μm in diameter. Mesophyll scattered with fine needle crystals of calcium oxalate. Fibre bundles surrounded by parenchymatous cells containing prisms of calcium oxalate, forming crystal fibres. Stone cells branched, walls thickened, striations distinct. Stone cells of pericarp pale purplish-red or yellowish-brown, subrounded or polygonal, up to about 125 μm in diameter. Sclerenchymatous cells of endotesta yellowish-brown or brownish-red, subpolygonal in surface view, walls thickened, lumina containing silica bodies. Irregular fine granules dark brownish-red, lustrous, with dark black edges.
(2) Triturate well 9 g of the pills, cut into pieces, with 6 g of kieselguhr, heat under reflux on a water bath with 60 ml of chloroform for 1 hour and filter. Extract the filtrate by shaking with three 20-ml quantities of a 2% solution of sodium hydroxide. combine the extracts and adjust to pH 1-2 with dilute hydrochloric acid TS. Extract with three 20-ml quantities of chloroform. Wash the combined chloroform solutions with 120 ml of water in two portions, dehydrate with anhydrous sodium sulfate and evaporate to dryness. Dissolve the residue in 1 ml of dehydrated ethanol as the test solution. Dissolve magnolol CRS and honokiol CRS in dehydrated ethanol to produce a mixture containing 1 mg each per ml as the reference solution. Carry out the method for thin layer chromatography (Appendix Ⅵ B), using silica gel GF_{254} prepared with 1% sodium hydroxide as the coating substance and a mixture of benzene and ethyl acetate (6 : 1) as the mobile phase. Apply separately to the plate 5 μl of each of the two solutions. After developing and removal of the plate, dry in air and examine under ultraviolet light at

254 nm. The spots in the chromatogram obtained with the test solution correspond in position and colour to the spots in the chromatogram obtained with the reference solution. Spray with 5% vanillin in sulfuric acid and heat at 105℃ for several minutes, the spots turn red.

Other requirments Comply with the general requirements for pills (Appendix Ⅰ A).

Action To release the exterior and resolve *dampness*, and harmonize the *middle-energizer* to promote digestion.

Indications Commom cold in chidren due to summer-heat and *dampness* with manifestations of headache and fever, no desire for food or milk, distending pain in the abdomen, vomiting and diarrhea and difficult urination.

Usage and dosage 1 pill, 1-2 times a day; appropriate reduction of the dosage for children under one year of age.

Strength 3 g per pill

Storage Preserve in tightly closed containers.

Xiaochaihu Keli
(小柴胡颗粒)

Xiaochaihu Granules

Ingredients Radix Bupleuri 240 g; Radix Scutellariae 90 g; Rhizoma Pinelliae (processed with ginger) 90 g; Radix Codonopsis 90 g; Rhizoma Zingiberis Recens 90 g; Radix et Rhizoma Glycyrrhizae 90 g; Fructus Jujubae 90 g.

Procedure Decoct Radix Bupleuri, Radix Scutellariae, Radix Codonopsis, Radix et Rhizoma Glycyrrhizae, and Fructus Jujubae with water twice, each for 1.5 hours. Combine the decoctions, and filter. Concentrate the filtrate to a quantity. To Rhizoma Pinelliae (processed with ginger) and Rhizoma Zingiberis Recens, carry out the method for percolation as described under extracts and liquid extracts (Appendix Ⅰ O), macerate with 70% ethanol for 24 hours, then percolate slowly at a speed of 1-3 ml per minute, collect about 900 ml of percolate. Recover ethanol, combine with the above extract, concentrate to a thin extract with a relative density of 1.32-1.35 (75℃). Add 6 times quantity of sucrose, make granules, and dry. Or combine with the above extract, concentrate to a thin extract with a relative density of 1.08-1.10 (60℃), dry by spraying, make dry extract powder. Add a quantity of lactose, mix well, make 400 g of granules (without sucrose).

Description Yellowish-brown to dark brown granules; taste, sweet; or brownish-yellow granules; taste, weak, slightly pungent (without sucrose).

Identification (1) Pulverize 6 g or 1.5 g (granules without sucrose) to fine powder, add 20 ml of ethanol, ultrasonicate for 20 minutes, filter, evaporate the filtrate to dryness, and dissolve the residue in 20 ml of water. Adjust to pH 2-3 with hydrochloric acid, extract with two 20-ml quantities of ethyl acetate, combine the ethyl acetate extracts and evaporate to dryness, dissolve the residue in 1 ml of methanol as the test solution. Dissolve baicalin CRS in methanol to produce a solution containing 1 mg per ml as the reference solution. Carry out the method for thin layer chromatography (Appendix Ⅵ B), using silica gel G mixed with sodium carboxymethyl cellulose containing 4 % solution of sodium acetat as the coating substance and a mixture of ethyl acetate, butanone, formic acid and water (5 : 3 : 1 : 1) as the mobile phase. Apply separately 10 μl each of the reference solution and the test solution to the plate. After developing and removing the plate, dry in air, and spray with 1% ferric chloride in ethanol. The spot in the chromatogram obtained with the test solution corresponds in position and colour to the spot in the chromatogram obtained with the reference solution.

(2) Decoct 1 g of Radix et Rhizoma Glycyrrhizae reference drug with a quantity of water for 30 minutes, allow to cool and filter, concentrate the filtrate to about 20 ml, extract with two 20-ml quantities of n-butanol saturated with water. Combine the n-butanol extracts, wash with water saturated with n-butanol, evaporate n-butanol to dryness, dissolve the residue in 1 ml of methanol as the reference drug solution. Carry out the method for thin layer chromatography (Appendix Ⅵ B), using silica gel G as the coating substance and a mixture of chloroform, methanol and water (40 : 10 : 1) as the mobile phase. Apply separately 10 μl of the test solution and 5-10 μl of the reference drug solution to the plate. After developing and removing the plate, dry in the air, spray with 5% vanillin in sulfuric acid, and heat at 105℃ to the spots clear. The spots in the chromatogram obtained with the test solution correspond in position and colour to the spots in the chromatogram obtained with the reference drug solution.

Assay Carry out the method for high performance liquid chromatography (Appendix Ⅵ D).

Chromatography system and system suitability Use octadecylsilane bonded silica gel as the stationary phase and a mixture of methanol, water and phosphoric acid (47 : 53 : 0.2) as the mobile phase. As detector a spectrophotometer set at 315 nm. The number of theoretical plates of the column is not less than 3000, calculated with the reference to the peak of baicalin.

Reference solution Weigh accurately 12 mg of baicalin CRS to a 100 ml volumetric flask, dissolve in 70% ethanol and dilute to volume, and mix well. Measure accurately 5 ml to a 10 ml volumetric flask, dilute to volume with 70% ethanol, mix well, and use as the reference solution (containing 60 μg of baicalin per ml).

Test solution Pulverize granules, obtained under the test of packing variation, to fine powder. Weigh accurately 3 g of the granules or 1.5 g of the granules (without sucrose) to a stopper conical flask, add accurately 50 ml of ethanol, stopper and weigh. Ultrasonicate (power, 250 W; frequency, 50 kHz) for 30 minutes, allow to cool, weigh again, replenish the lost weight with 70% ethanol, mix well, filter, and use the successive filtrate as the test solution.

Procedure Inject accurately 10 μl of each of the reference solution and the test solution into the column, respectively, and calculate the content.

It contains not less than 15.0 mg of baicalin ($C_{21}H_{18}O_{11}$) per pack, referred to Radix Scutellariae.

Action To release the exterior and disperse *heat*, and soothe the liver and harmonize the stomach.

Indications Affliction from external pathogenic factors, invasion of the *Shaoyang* by pathogenic factors with manifestations of alternative chills and fever, fullness and discomfort in the chest and hypochondriua, loss of appitite, restlessness, proneness to vomiting, bitter taste in the mouth and dry throat.

Usage and dosage Taken after dissolved in boiled water. 1-2 pack, 3 times a day.

Strength (1) 10 g per pack (2) 2.5 g per pack (without sucrose)

Storage Preserve in tightly closed containers.

Xiaochaihu Pian
(小柴胡片)

Xiaochaihu Tablets

Ingredients Radix Bupleuri 445 g; Rhizoma Pinelliae (processed with ginger) 222 g; Radix Scutellariae 167 g; Radix Codonopsis 167 g; Radix et Rhizoma Glycyrrhizae 167 g; Rhizoma Zingiberis Recens 167 g; Fructus Jujubae 167 g.

Procedure Pulverize 45 g of Radix Codonopsis and 45 g of Radix et Rhizoma Glycyrrhizae to fine powder. Decoct the remained portion of Radix Codonopsis and Radix et Rhizoma Glycyrrhizae, Radix Bupleuri, Radix Scutellariae, and Fructus Jujubae for two times, 1.5 hours each, combine the decoctions, filter, and concentrate the filtrate to a quantity. Carry out the method of percolation as described under liquid extracts and extracts (Appendix Ⅰ O), macerate Rhizoma Pinelliae and Rhizoma Zingiberis Recens with 70% ethanol for 24 hours and percolate slowly at a speed of 1-3 ml per minute. Collect about 1670 ml of the percolates, recover ethanol, then mix with the above concentrated solution, concentrate to a thick extract. Add the above fine powder and a quantity of excipients, mix well, dry, pulverize to fine powder, make granules, dry and compress into 1000 tablets, or coat with film.

Description Greyish-brown to blackish-brown tablets or film coated tablets with greyish-brown to blackish-brown core; odour, slight; taste, sweet, slightly bitter.

Identification (1) Microscopical: Anastomosing laticiferous tubes 12-15 μm in diameter, containing fine granules. Fibre bundles surrounded by parenchymatous cells containing prisms of calcium oxalate, forming crystal fibres.

(2) To 10 tablets, finely powdered, add 20 ml of ethanol, ultrasonicate for 20 minutes, filter, and evaporate the filtrate to dryness. Dissolve the residue in 20 ml of water and adjust to pH 2-3 with hydrochloric acid. Extract with two 20-ml quantities of ethyl acetate, combine the ethyl acetate extracts, evaporate to dryness, and dissolve the residue in 1 ml of methanol as the test solution. Dissolve baicalin CRS in methanol to produce a solution containing 1 mg per ml as the reference solution. Carry out the method for thin layer chromatography (Appendix Ⅵ B), using silica gel G mixed with sodium carboxymethylcellulose containing 4% solution of sodium acetate as the coating substance and a mixture of ethyl acetate, butanone, formic acid and water (5 : 3 : 1 : 1) as the mobile phase. Apply separately 10 μl of each of the two solutions to the plate. After developing and removal of the plate, dry in air and spray with 1% ferric chloride in ethanol. The spot in the chromatogram obtained with the test solution corresponds in position and colour to the spot in the chromatogram obtained with the reference solution.

(3) To 10 tablets, finely powdered, add 20 ml of ethanol, ultrasonicate for 20 minutes, filter, and evaporate the filtrate to dryness. Dissolve the residue in 20 ml of water, extract with two 20-ml quantities of *n*-butanol saturated with water, combine the n-butanol extracts, wash with two 10-ml quantities of water saturated with *n*-butanol. Evaporate the *n*-butanol extracts to dryness and dissolve the residue in 1 ml of methanol as the test solution. To 1 g of Radix et Rhizoma Glycyrrhizae reference drug, add a quantity of water, decoct for 30 minutes, allow to cool. Filter, and concentrate the filtrate to 20 ml. Extract with two 20-ml quantities of n-butanol saturated with water, combine the n-butanol extracts, wash with two 10-ml quantities of water saturated with *n*-butanol. Evaporate the *n*-butanol extracts to dryness and dissolve the residue in 1 ml of methanol as the reference drug solution. Carry out the method for thin layer chromatography (Appendix Ⅵ B), using silica gel G as the coating substance and a mixture of chloroform, methanol and water (40 : 10 : 1) as the mobile phase. Apply separately 5-10 μl of each of the two solutions to the plate. After developing and removal of the plate, dry in air and spray with 5% vanillin in sulfuric acid, heat at 105 ℃ to the spots clear. The spots in the chromatogram obtained with the test solution correspond in position and colour to the spots in the chromatogram obtained with the reference drug solution.

Other requirements Comply with the general requirements for tablets (Appendix Ⅰ D).

Assay Carry out the method for high performance liquid chromatography (Appendix Ⅵ D).

Chromatographic system and system suitability Use the octadecylsilane bonded silica gel as the stationary phase and a mixture of methanol, water and glacial acetic acid (50 : 50 : 1) as the mobile phase. As detector a spectrophotometer set at 315 nm. The number of the theoretical plates of the column is not less than 2000, calculated with the reference to the peak of baicalin.

Reference solution Weigh accurately a quantity of baicalin CRS, dissolve in 70% ethanol to produce a solution containing 40 μg per ml as the reference solution.

Test solution Grind the tablets, obtained under the test of weight variation, to fine powder, weigh accurately 0.3 g in a 100 ml volumetric flask, add 70 ml of 70% ethanol and ultrasonicate (power, 250 W; frequency, 33 kHz) for 30 minutes, cool, add 70% ethanol to volume, shake well, filter and use the successive filtrate as the test solution.

Procedure Inject accurately 10 μl of each of the reference solution and the test solution into the column, respectively, and calculate the content.

It contains not less than 2.0 mg of baicalin ($C_{21}H_{18}O_{11}$) per tablet, referred to Radix Scutellariae.

Action To release the exterior and disperse *heat*, and soothe the liver and harmonize the stomach.

Indications Affliction from external pathogenic factors, invasion of the *Shaoyang* by pathogenic factors with manifestations of alternative chills and fever, fullness and discomfort in the chest and hypochondrium, anorexia, restlessness, proneness to vomiting, bitter taste in the mouth and dry throat.

Usage and dosage 4-6 tablets, 3 times a day.

Strength 0.4 g per tablet

Storage Preserve in tightly closed containers.

Xiao'er Baibu Zhike Tangjiang
(小儿百部止咳糖浆)

Xiao'er Baibu Zhike Syrup

Ingredients Radix Stemonae (processed with honey) 100 g; Semen Armeniacae Amarum 50 g; Radix Platycodonis 50 g; Cortex Mori 50 g; Radix Ophiopogonis 25 g; Rhizoma Anemarrhenae 25 g; Radix Scutellariae 100 g; Pericarpium Citri Reticulatae 100 g; Radix et Rhizoma Glycyrrhizae 25 g; Rhizoma Arisaematis (processed) 25 g; Fructus Aurantii (stir-baked) 50 g.

Procedure Decoct the above eleven ingredients with water twice, 3 hours for the first time, 2 hours for the second

time. Combine the decoctions, and filter. Collect the filtrate, allow to stand over 6 hours, concentrate the supernatant to an appropriate amount. Boil 650 g of sucrose with water to make syrup, mix well with the above concentrate, boil, allow to cool, add 2.5 g of sodium benzoate and a quantity of essence, add water to 1000 ml. Mix well, allow to stand and filter.

Description A dark brown thick liquid; taste, sweet.

Identification (1) To 5 ml of the syrup, add 15 ml of 75% ethanol, ultrasonicate for 20 minutes, filter, use the filtrate as the test solution. Dissolve baicalin CRS in 75% ethanol to produce a solution containing 0.2 mg per ml as the reference solution. Carry out the method for thin layer chromatography (Appendix Ⅵ B), using polyamide as the coating substance and acetic acid as the mobile phase. Apply separately 1-3 μl of each of the test solution and the reference solution to the plate. After developing and removing the plate, dry in air. Examine under the ultraviolet light at 365 nm. The fluorescent spot in the chromatogram obtained with the test solution corresponds in position and colour to the spot in the chromatogram obtained with the reference solution.

(2) Measure 1 ml of the syrup to a stopper centrifugal tube, add 1 ml of methanol, shake and centrifuge, use the supernatant as the test solution. Dissolve hesperidin CRS in methanol to produce a saturation solution as the reference solution. Carry out the method for thin layer chromatography (Appendix Ⅵ B), using silica gel G mixed with 0.5% sodium hydroxide as the coating substance and a mixture of ethyl acetate, methanol and water (100 : 17 : 3) as the mobile phase. Apply separately 2 μl of each of the test solution and the reference solution to the plate. After developing about 3 cm and removing the plate, dry in air. Develop again with the upper layer of a mixture of toluene, ethyl acetate, methanol and water (20 : 10 : 1 : 1) as the mobile phase. After developing about 8 cm and removing the plate, dry in air. Spray with aluminium trichloride TS, and examine under ultraviolet light at 365 nm. The fluorescent spot in the chromatogram obtained with the test solution corresponds in position and colour to the spot in the chromatogram obtained with the reference solution.

Other requirements Comply to the general requirements for syrup (Appendix Ⅰ H).

Assay Carry out the method for high performance liquid chromatography (Appendix Ⅵ D).

Chromatography system and system suitability Use octadecylsilane bonded silica gel as the stationary phase and a mixture of methanol, water and phosphoric acid (45 : 55 : 0.04) as the mobile phase. As detector a spectrophotometer set at 276 nm. The number of theoretical plates of the column is not less than 2500, calculated with the reference to the peak of baicalin.

Reference solution Weigh accurately a quantity of baicalin CRS, dissolve in 50% methanol to produce a reference solution containing 20 μg per ml.

Test solution Measure accurately 2 ml of the syrup to a 100 ml volumetric flask, dissolve and dilute to volume with water, mix well. Measure accurately 10 ml to a 50 ml volumetric flask, dilute to volume with 65% methanol, and mix well, filter, and use the successive filtrate as the test solution.

Procedure Inject accurately 10 μl of each of the reference solution and the test solution into the column, respectively, and calculate the content.

It contains not less than 3.7 mg of baicalin ($C_{21}H_{18}O_{11}$) per ml, referred to Radix Scutellariae.

Action To clear the lung, relieve coughing and resolve phlegm.

Indications Coughing or whooping cough in children due to *phlegm-heat* retained in the lung, with manifestations of coughing, expectoration of profuse yellow phlegm, or difficult expectoration of thick phlegm, or coughing with phlegm continually; and pertussis with above symptoms.

Usage and dosage 10 ml, for children of 2 years old, 5 ml, for children under 2 years of age, 3 times a day.

Strength (1) 10 ml per phial (2) 100 ml per bottle

Storage Preserve in tightly closed containers.

Xiao'er Baishou Wan
(小儿百寿丸)

Xiao'er Baishou Pills

Ingredients Ramulus Uncariae cum Uncis 45 g; Bombyx Batryticatus (stir-baked with bran) 45 g; Arisaema cum Bile (stir-baked with wine) 75 g; Concretio Silicea Bambusae 75 g; Radix Platycodonis 30 g; Radix Aucklandiae 75 g; Fructus Amomi 45 g; Pericarpium Citri Reticulatae 75 g; Rhizoma Atractylodis (processed) 75 g; Poria 30 g; Fructus Crataegi (stir-baked) 150 g; Massa Medicata Fermentata (stir-baked with bran) 45 g; Fructus Hordei Germinatus (stir-baked) 45 g; Herba Menthae 45 g; Talcum 150 g; Radix et Rhizoma Glycyrrhizae 30 g; Cinnabaris 10 g; Calculus Bovis 10 g.

Procedure Levigate Cinnabaris to very fine powder and pulverize the other sixteen ingredients, except Calculus Bovis, to fine powder. Triturate Calculus Bovis and mix with all the above powders, sift and mix well. To each 100 g of the powder add 100-120 g of refined honey to make big honeyed pills.

Description Brownish-red big honeyed pills; odour, aromatic; taste, sweet.

Identification (1) Microscopical: Irregular pieces colourless, in samdwich. Fibre bundles surrounded by parenchymatous cells containing prisms of calcium oxalate, forming crystal fibres. Anastomosing laticiferous tubes 14-25 μm in diameter, containing pale yellow granular contents. Needle crystals of calcium oxalate in bundles or scattered, 90 μm long. Sand crystals of calcium oxalate occurring in parenchymatous cells, crystal cells sometimes arranged in rows. Fragments of body walls colourless, with very fine hyphae. Irregularly branched masses colourless, dissolved in chloral hydrate TS, hyphae colourless or pale brown, 4-6 μm in diameter. Prisms of calcium oxalate occurring in parenchymatous cells. Epidermal cells longitudinally arranged, with one long cell and two short cells connected alternatively, the long cells with thickened, sinuous and lignified walls. Sclerenchymatous cells of endotesta yellowish-brown or brownish-red, subpolygonal in surface view, with thickened walls, each lumen containing a silica body. Stone cells of pericarp purplish-red, red or yellowish-brown, subrounded or polygonal, up to about 125 μm in diameter. Glandular scales composed of a 8-celled head, oblate spheroidal, 90 μm in diameter, and a short unicellular stalk. Irregular minute granules dark brownish-red, lustrous, with dark black edge.

(2) Triturate well 9 g of the pills, cut into pieces, with 3 g of kieselguhr, add 30 ml of ether, ultrasonicate for 10 minutes and filter. Evaporate the filtrate to about 1 ml as the test solution. Prepare a solution of 0.5 g of the Radix Aucklandiae reference drug and 10 ml of ether as the

reference drug solution in the same manner. Carry out the method for thin layer chromatography (Appendix Ⅵ B), using silica gel G as the coating substance and a mixture of benzene and methanol (27 : 1) as the mobile phase. Apply separately 2 μl of each of the two solutions to the plate. After developing and removal of the plate, dry in air. Spray with 1% vanillin in sulphuric acid and heat at 105℃ to the spots clear. The two purplish-blue to purplish-black spots in the chromatogram obtained with the test solution correspond in position and colour to the spots in the chromatogram obtained with the reference drug solution.

(3) Dissolve ursolic acid CRS in methanal to produce a solution containing 1 mg per ml as the reference solution. Carry out the method for thin layer chromatography (Appendix Ⅵ B), using silica gel G as the coating substance and a mixture of chloroform and acetone (12 : 1) as the mobile phase. Apply separately 2 μl of each of the test solution obtained in the test of Identification (2) and the reference solution to the plate. After developing and removal of the plate, dry in air. Spray with 10% sulphuric acid in ethanol, heat at 105℃ for several minutes and examine under ultraviolet light at 365 nm. The orange-red spot in the chromatogram obtained with the test solution corresponds in position and colour to the spot in the chromatogram obtained with the reference solution.

Other requirements Comply with the general requirements for pills (Appendix Ⅰ A).

Action To expel *wind-heat* and promote digestion to remove undigested food.

Indications Common cold in children caused by *wind-heat* and food retention with manifestations of fever, headache, fullness in the chest and epigastrium, no desire for food or milk and acid regurgitation, coughing with expectoration of excessive phlegm, or convulsion.

Usage and dosage 1 pill, twice a day; appropriate reduction of the dosage for children under one year of age.

Strength 3 g per pill

Storage Preserve in tightly closed containers.

Xiao'er Feire Kechuan Koufuye (小儿肺热咳喘口服液)

Xiao'er Feire Kechuan Mixture

Ingredients Herba Ephedrae 50 g; Semen Armeniacae Amarum 100 g; Gypsum Fibrosum 400 g; Radix et Rhizoma Glycyrrhizae 50 g; Flos Lonicerae Japonicae 167 g; Fructus Forsythiae 167 g; Rhizoma Anemarrhenae 167 g; Radix Scutellariae 167 g; Radix Isatidis 167 g; Radix Ophiopogonis 167 g; Herba Houttuyniae 167 g.

Procedure Decoct Gypsum Fibrosum with water for half an hour, add Herba Ephedrae and other ingredients, decoct with water twice, each for 1 hour. Combine the decoctions, filter, concentrate the filtrate to a thin extract with a relative density of 1.10-1.15 (80℃), cool, add ethanol to a content of 75%, mix well, and allow to stand for 24 hours. Filter, recover ethanol and concentrate to a thin extract with a relative density of 1.20-1.25 (80℃), add water to 1000 ml, and mix well, refrigerate for 96 hours under 4-7℃. Filter, add a quantity of antiseptic and flavoring agents, add water to a volume of 1000 ml, mix well, pack and sterilize.

Description A brownish-red liquid, little precipitate may be produced when being stored for a long time; taste, bitter, slightly sweet.

Identification (1) Carry out the method for thin layer chromatography (Appendix Ⅵ B), using silica gel G as the coating substance and a mixture of ethanol and concentrated ammonia TS (10 : 0.5) as the mobile phase. Apply separately 3 μl of each of the test solution and the reference solution obtained under the Assay to the plate. After developing and removing the plate, dry in air. Spray with ninhydrin TS, heat at 105℃ to spots clear. The spots in the chromatography obtained with the test solution corresponds in position and colour to the spot in the chromatography obtained with the reference solution.

(2) To 5 ml of the mixture, add 5 ml of water, adjust to pH 1-2 with dilute hydrochloric acid TS, centrifuge at 3000 round per minute for 10 minutes, separate the supernatant and keep the deposition for later use. Extract the supernatant with 15 ml of ethyl acetate, separate the ethyl acetate extracts and evaporate to dryness, dissolve the residue in 1 ml of ethyl acetate as the test solution Ⅰ. Dissolve the above deposition in 5 ml of ethanol as the test solution Ⅱ. Dissolve chlorogenic acid CRS and baicalin CRS in ethanol to produce solutions containing 1 mg per ml and 0.3 mg per ml respectively as the reference solutions. Carry out the method for thin layer chromatography (Appendix Ⅵ B), using polyamide as the coating substance and a mixture of ethyl acetate, methanol and formic acid (8 : 1 : 1) as the mobile phase. Apply separately 1-2 μl of each of the test solutions and the reference solutions to the plate. After developing and removing the plate, dry in air. Examine under the ultraviolet light at 365 nm. The fluorescent spots in the chromatogram obtained with the test solutions correspond in position and colour to the spots in the chromatogram obtained with the reference solutions.

Relative density 1.07-1.12 (Appendix Ⅶ A).

pH value 5.0-7.0 (Appendix Ⅶ G).

Assay Measure accurately 10 ml of the mixture, add 10 ml of a saturation solution of sodium chloride, adjust to pH 12-13 with 10% solution of sodium hydroxide. Extract with one 20-ml, three 15-ml and one 10-ml quantities of ether, combine the ether extracts and evaporate to almost dryness, dissolve the residue immediately in methanol, transfer to a 5 ml volumetric flask, dilute to volume with methanol, mix well, use as the test solution. Dissolve a quantity of ephedrine hydrochloride CRS, weigh accurately, in methanol to prepare a reference solution containing 0.5 mg per ml. Carry out the method for thin layer chromatography (Appendix Ⅵ B), using silica gel G mixed with sodium carboxymethylcellulose as the coating substance and a mixture of chloroform, methanol and concentrated ammonia TS (4 : 1 : 0.1) as a mobile phase. Apply accurately to the plate 3 μl of the test solution, 1 μl and 4 μl of the reference solution alternatively. After developing and removing the plate, dry in air. Spray with 0.5% ninhydrin solution in ethanol prepared freshly, heat at 105℃ to spots clear, cover the plate with a glass plate of the same size and fix up with adhesive plaster. Carry out the method for thin layer chromatography (Appendix Ⅵ B, thin layer chromatographic scanning method), scan at the wavelength of $\lambda_S = 510$ nm, $\lambda_R = 700$ nm. Measure the integration values of the absorbance from the test solution and the reference solution respectively, and calculate the content.

It contains not less than 0.15 mg of ephedrine hydrochloride ($C_{10}H_{15}NO \cdot HCl$) per ml, referred to Herba Ephedrae.

Action To clear *heat-toxins*, and disseminate the lung and resolve phlegm.

Indications Fever, sweating, mild aversion to *cold-wind*, coughing with expectoration of yellow phlegm, or accompanied with shortness of breath, dry mouth and thirsty due to invasion of the lung by *heat*.

Usage and dosage 10 ml, for children of 1-3 years old, 3 times a day; 10 ml, for children of 4-7 years old, 4 times a day; 20 ml, for children of 8-12 years old, 3 times a day; or follow doctor's advice.

Precaution Mild gastro-intestinal disorder might be seen on large dose.

Strength 10 ml per phial

Storage Preserve in tightly closed containers.

Xiao'er Fuxiening Tangjiang (小儿腹泻宁糖浆)

Xiao'er Fuxiening Syrup

Ingredients Radix Codonopsis 150 g; Rhizoma Atractylodis Macrocephalae 200 g; Poria 200 g; Radix Puerariae Lobatae 250 g; Radix et Rhizoma Glycyrrhizae 50 g; Herba Pogostemonis 50 g; Radix Aucklandiae 50 g.

Procedure Distill Rhizoma Atractylodis Macrocephalae, Herba Pogostemonis, Radix Aucklandiae with water, collect the distillate, decoct the residue with the other four ingredients twice, each for 2 hours. Combine the decoctions, filter, concentrate the filtrate to an appropriate amount, allow to cool, add ethanol to a content of 50% ethanol, allow to stand, filter and recover ethanol, add 610 g of sucrose and 3 g of sorbic acid, boil to dissolve, and filter. Add the above distillate to the filtrate, mix well, make to 1000 ml.

Description A dark brown thick liquid; odour, aromatic; taste, slightly astringent and sweet.

Identification (1) Extract 5 ml of the syrup with two 20-ml quantities of n-butanol saturated with water, combine the n-butanol extracts, evaporate to dryness. Dissolve the residue in 2 ml of methanol, apply to a column (1-1.5 cm in diameter) packed with neutral alumina trichloride (100-120 meshs, 5 g), elute with 50 ml of 40% methanol, collect the eluate, evaporate to dryness, dissolve the residue in 1 ml of methanol as the test solution. Decoct 0.5 g of Radix Codonopsis reference drug with 50 ml of water for 30 minutes, prepare a solution in the same manner as the reference drug solution. Carry out the method for thin layer chromatography (Appendix Ⅵ B), using silica gel as the coating substance and a mixture of *n*-butanol, ethanol and water (7 : 2 : 1) as the mobile phase. Apply separately 2 μl of each of the test solutions and the reference solutions to the plate. After developing and removing the plate, dry in air. Spray with 10% sulfuric acid in ethanol, heat at 105℃ to the spots clear. The spots in the chromatogram obtained with the test solution correspond in position and colour to the spots in the chromatogram obtained with the reference drug solution.

(2) Extract 30 ml of syrup with 10 ml of petroleum ether (30-60℃), discard the petroleum ether extracts, extract the water layer again with two 20-ml quantities of ether. Combine the ether extracts, evaporate to dryness, and dissolve the residue in 1 ml of ethyl acetate as the test solution. Prepare a solution of 1.5 g of Rhizoma Atractylodis Macrocephalae reference drug in the same manner as the reference drug solution. Carry out the method for thin layer chromatography (Appendix Ⅵ B), using silica gel as the coating substance and a mixture of cyclohexane and ethyl acetate (7 : 3) as the mobile phase. Apply separately 10 μl of each of the test solutions and the reference solutions to the plate. After developing and removing the plate, dry in air. Spray with 5% *p*-dimethylaminobenzaldehyde in 10% solution of sulfuric acid, heat at 105℃ to the spots clear. Examine under ultraviolet light at 365 nm. The fluorescent spots in the chromatogram obtained with the test solutions correspond in position and colour to the spots in the chromatogram obtained with the reference drug solution.

Relative density 1.24-1.28 (Appendix Ⅶ A).

Other requirements Comply with the general requirements for syrups (Appendix Ⅰ H).

Assay Carry out the method for high performance liquid chromatography (Appendix Ⅵ D).

Chromatography system and system suitability Use octadecylsilane bonded silica gel as the stationary phase and a mixture of methanol and water (25 : 75) as the mobile phase. As detector a spectrophotometer set at 250 nm. The number of theoretical plates of the column is not less than 2000, calculated with the reference to the peak of puerarin.

Reference solution Weigh accurately a quantity of puerarin CRS, dissolve in methanol to produce a reference solution containing 80 μg per ml.

Test solution Weigh accurately 6 g of the syrup to a 50 ml volumetric flask, dilute to volume with methanol, mix well, filter, and use the successive filtrate as the test solution.

Procedure Inject accurately 5-10 μl of each of the reference solution and the test solution into the column, respectively, and calculate the content.

It contains not less than 0.25 mg of puerarin ($C_{21}H_{20}O_9$) per gram, referred to Radix Puerariae Lobatae.

Action To invigorate the spleen and harmonize the stomach, generate production of body fluids and stop diarrhea.

Indications Diarrhea due to a deficiency of *spleen-qi* and *stomach-qi*, with manifestations of diarrhea accompanied with distending pain in the abdomen, poor appetite, vomiting, dry mouth, lassitude and pale tongue with white fur.

Usage and dosage 10 ml, for children of 10 years old, twice a day; appropriate reduction of the dosage for children under 10 years of age.

Precaution Be cautious about patients with red tongue and thirty after vomiting and diarrhea, and concentrated urine.

Strength 10 ml per phial

Storage Preserve in tightly closed containers.

Xiao'er Fuxie Waifu San (小儿腹泻外敷散)

Xiao'er Fuxie Waifu Powder

Ingredients Fructus Evodiae; Flos Caryophylli; Fructus Piperis Albus; Cortex Cinnamomi.

Procedure Pulverize the above four ingredients to fine powder, sift, mix well and pack.

Description A brownish-yellow powder; odour, aromatic; taste, pungent.

Identification (1) Microscopical: Pollen grains triangular, about 16 μm in diameter. Nonglandular hairs 2-6-celled, lumina sometimes containing reddish-brown substances. Glandular hairs with multicellular, elliptical head containing brownish-yellow to brownish-red contents, and with a 2-5-celled stalk. Stone cells in pericarp subrounded or oblong, yellow, 15-40 μm in diameter; walls thickened, lumina containing brown substances.

(2) To 1 g of the powder add 10 ml of ethanol, ultrasonicate for 20 minutes, filter and use the filtrate as the test solution. Prepare a solution of 0.5 g of Fructus Evodiae reference drug as the reference drug solution in the same manner. Carry out the method for thin layer chromatography (Appendix Ⅵ B), using silica gel G mixed with sodium carboxymethylcellulose as the coating substance and a mixture of *n*-butanol, glacial acetic acid and water (5 : 1 : 1) as the mobile phase. Apply separately 2 μl of each of the two solutions to the plate. After developing and removal of the plate, dry in air and examine under ultraviolet light at 365 nm. The fluorescent spots in the chromatogram obtained with the test solution correspond in position and colour to the spots in the chromatogram obtained with the reference drug solution.

(3) Macerate 1 g of the powder in 30 ml of ether for 1 hour while shaking frequently, filter and evaporate the filtrate to dryness. Dissolve the residue in 1 ml of methanol as the test solution. Dissolve cinnamaldehyde CRS in ethanol to produce a solution containing 2 μl per ml as the reference solution. Carry out the method for thin layer chromatography (Appendix Ⅵ B), using silica gel G as the coating substance and a mixture of petroleum ether (60-90℃) and ethyl acetate (17 : 3) as the mobile phase. Apply separately 2 μl of each of the two solutions to the plate. After developing and removal of the plate, dry in air and spray with alcoholic dinitropenylhydrazine TS. The spot in the chromatogram obtained with the test solution corresponds in position and colour to the spot in the chromatogram obtained with the reference solution.

Other requirements Complies with the general requirements for powders (Appendix Ⅰ B).

Action To warm the *middle-energizer* to expel cold, kill pain and stop diarrhea.

Indications Diarrhea due to *cold* from deficiency in the spleen and stomach with manifestations of loose stools, pain of the *stomach* and abdomen, alleviated by warmth and pressure.

Usage and dosage For external use. A paste is made with vinegar and applied on the umbilical region; one fourth bottle of the powder for children under 2 years of age and one third bottle of the powder for children over 2 years of age. If bowel movements exceed 20 times a day-one fourth bottle of the powder is *yongquan* (KI1). Change the dressing every 24 hours.

Strength 5 g per bottle

Storage Preserve in tightly closed containers.

Xiao'er Ganmao Cha (小儿感冒茶)

Xiao'er Ganmao Medicinal Teas

Ingredients Herba Pogostemonis 75 g; Flos Chrysanthemi 75 g; Fructus Forsythiae 75 g; Folium Isatidis 125 g; Radix Isatidis 75 g; Radix Rehmanniae 75 g; Cortex Lycii 75 g; Radix et Rhizoma Cynanchi Atrati 75 g; Herba Menthae 50 g; Gypsum Fibrosum 125 g.

Procedure Pulverize 25 g of Gypsum Fibrosum and Radix Isatidis to fine powder. Decoct Radix Rehmanniae, Radix Cynanchi Atrati, Cortex Lycii and 100 g of Gypsum Fibrosum with water twice, 3 hours and 1 hour respectively, combine the decoctions and filter. Macerate Flos Chrysanthemi and Folium Isatidis in warm water twice, 2 hours and 1 hour respectively, combine the liquid and filter. Distill volatile oil from Herba Pogostemonis, Herba Menthae and Fructus Forsythiae, then filter the aqueous liquid. Combine the above all filtrates and concentrate to a thin extract with a relative density of 1.30-1.35 (50℃). Mix thoroughly 1 portion of the thin extract, 2 portions of powdered sucrose and 1 portion of dextrin with the above fine powder, make granules and dry. To the dried granules add the above volatile oil, mix thoroughly and compress into lumps.

Description Pale brownish lumps; taste, sweet and slightly bitter.

Identification Triturate 30 g to fine powder, add 40 ml of chloroform, heat under reflux for 1 hour, cool and filter. Evaporate the filtrate to about 0.5 ml as the test solution. Dissolve indigotin CRS in chloroform to produce a solution containing 1 mg per ml as the reference solution. Carry out the method for thin layer chromatography (Appendix Ⅵ B), using silica gel G as the coating substances and a mixture of benzene, chloroform and acetone (5 : 4 : 1) as the mobile phase. Apply separately 10 μl of the test solution and 5 μl of the reference solution to the plate. After developing and removal of the plate, dry in air. The spot in the chromatogram obtained with the test solution corresponds in position and colour to the spot in the chromatogram obtained with the reference solution.

Other requirements Comply with the general requirements medicinal for teas (Appendix Ⅰ T).

Action To disperse *wind* to release the exterior, and clear *heat* to relieve *toxicity*.

Indications Common cold in children due to *wind-heat* with manifestations of high fever, distending pain in the head, coughing with expectoration of thick phlegm, swollen painful throat; influenza with above symptoms.

Usage and dosage Taken after dissolved in boiled water; 6 g, for children under 1 year old; 6-12 g, for children of 1-3 years old; 12-18 g, for children of 4-7 years old and 24 g, for children of 8-12 years old; twice a day.

Strength 6 g per lump

Storage Preserve in tightly closed containers, protected from moisture.

Xiao'er Ganmao Keli (小儿感冒颗粒)

Xiao'er Ganmao Granules

Ingredients Herba Pogostemonis 75 g; Flos Chrysanthemi 75 g; Fructus Forsythiae 75 g; Folium Isatidis 125 g; Radix Isatidis 75 g; Radix Rehmanniae 75 g; Cortex Lycii 75 g; Radix et Rhizoma Cynanchi Atrati 75 g; Herba Menthae 50 g; Gypsum Fibrosum 125 g.

Procedure Pulverize 25 g of Gypsum Fibrosum and Radix Isatidis to fine powder. Decoct Radix Rehmanniae, Radix Cynanchi Atrati, Cortex Lycii and 100 g of Gypsum Fibrosum with water twice, 3 hours and 1 hour respectively, combine the decoctions and filter. Macerate Flos Chrysanthemi and Folium Isatidis in warm water twice, 2 hours and 1 hour respectively, combine the macerates and filter. Distil essential oils from Herba Pogostemonis, Herba Menthae and Fructus Forsythiae, then filter the aqueous solution remained. Combine the above all filtrates and concentrate to a thin extract with a relative density of 1.30-1.35 (50℃). Mix thoroughly 1 portion of the thin extract, 2 portions of powdered sucrose and 1 portion of dextrin with

the above fine powder, make granules and dry. To the dried granules add the above essential oil and mix well.

Description Pale brown granules; taste, sweet and slightly bitter.

Identification Triturate 30 g to fine powder, add 40 ml of chloroform, heat and extract under reflux for 1 hour, cool, and filter. Evaporate the filtrate to about 0.5 ml as the test solution. Dissolve indigotin CRS in chloroform to produce a solution containing about 1 mg per ml as the reference solution. Carry out the method for thin layer chromatography (Appendix Ⅵ B), using silica gel G as the coating substance and a mixture of benzene, chloroform and acetone (5 : 4 : 1) as the mobile phase. Apply separately 10 μl of the test solution and 5 μl of the reference solution to the plate. After developing and removal of the plate, dry in air. The spot in the chromatogram obtained with the test solution corresponds in position and colour to the spot in the chromatogram obtained with the reference solution.

Other requirements Comply with the general requirements for granules (Appendix Ⅰ C).

Action To disperse *wind* to release the exterior, and clear *heat* to relieve *toxicity*.

Indications Common cold in children due to *wind-heat* with manifestations of high fever, distending pain in the head, coughing with thick phlegm, swollen painful throat; influenza with above symptoms.

Usage and dosage Taken after dissolved in boiling water; 6 g, for children under 1 year of age, 6-12 g, for children of 1-3 years of age, 12-18 g, for children of 4-7 years of age and 24 g, for children of 8-12 years of age, twice a day.

Strength 12 g per pack

Storage Preserve in tightly closed containers, protected from moisture.

Xiao'er Ganyan Keli
(小儿肝炎颗粒)

Xiao'er Ganyan Granules

Ingredients Herba Artemisiae Scopariae 120 g; Fructus Gardeniae (stir-baked with ginger juice) 30 g; Radix Scutellariae 60 g; Cortex Phellodendri Chinensis 60 g; Fructus Crataegi (charred by stir-baked) 90 g; Semen Sojae Germinatum 90 g; Radix Curcumae 15 g; Medulla Tetrapanacis 30 g.

Procedure Pulverize Fructus Gardeniae, Radix Scutellariae and Cortex Phellodendri Chinensis to fine powder. Decoct the other 5 ingredients with water twice, combine the decoctions, filter and concentrate to a thick extract with a relative density of 1.30-1.35 (50℃). For 1 portion of the thick extract, add 3 portions of sucrose, 1 portion of dextrin and the above fine powder, make granules and dry.

Description Yellowish-green to yellowish-brown granules; taste, sweet, slightly bitter and astrigent.

Identification (1) Microscopical: Bast fibres pale yellow, fusiform, walls thickened, with fine pit-canals. Crystal stone cells of pericarp subrounded or polygonal, 17-31μm in diameter; walls thickened, and lumina containing prisms of calcium oxalate. Fibre bundles bright yellow, surrounded by parenchymatous cells containing prisms of calcium oxalate, forming crystal fibres; the walls of the crystal cells thickened and lignified.

(2) Grind 1 g of the granules to fine powder, add 5 ml of ethanol, macerate overnight, filter, evaporate the filtrate to 1 ml as the test solution. Dissolve berberine hydrochloride CRS in ethanol to produce a solution containing 0.5 mg per ml as the reference solution. Carry out the method for thin layer chromatography (Appendix Ⅵ B), using silica gel G as the coating substance and a mixture of benzene, ethyl acetate, methanol, isopropanol and concentrated ammonia TS (12 : 6 : 3 : 3 : 1) as the mobile phase. Apply separately 1 μl of each of the two solutions to the plate. After developing in the chamber pre-equilibrated with ammonia vapour and removal the plate, dry in air and examine under ultraviolet light at 365 nm. The fluorescent spot in the chromatogram obtained with the test solution corresponds in position and colour to the spot in the chromatogram obtained with the reference solution.

(3) Triturate 15 g to fine powder, heat under reflux with 50 ml of ethyl acetate for 1 hour, filter and evaporate the filtrate to dryness. Dissolve the residue in 30 ml of ethanol, add 0.5g of active charcoal, stir well, filter and evaporate the filtrate to dryness. Dissolve the residue in 2 ml of ethanol as the test solution. Dissolve geniposide CRS in ethanol to produce a solution containing 1 mg per ml as the reference solution. Carry out the method for thin layer chromatography (Appendix Ⅵ B), using silica gel G as the coating substance and a mixture of benzene, chloroform, acetone, methanol and concentrated ammonia TS (4 : 5 : 4 : 3 : 0.8) as the mobile phase. Apply separately 4 μl of each of the two solutions to the plate. After developing and removal of the plate, dry in air, spray with 10% sulfuric acid in ethanol and heat at 105℃ to the spots clear. The spot in the chromatogram obtained with the test solution corresponds in position and colour to the spot in the chromatogram obtained with the reference solution.

(4) Pulverize 5 g of the granules to fine powder, add 30 ml of water, stir to dissolve, filter, extract the filtrate with three 30-ml quantities of chloroform, combine the chloroform extracts, evaporate to dryness, dissolve the residue in 1 ml of chloroform as the test solution. To 1 g of Herba Artemisiae Scopariae reference drug, add 20 ml of water, decoct for 30 minutes, filter, prepare the filtrate in the same manner as the reference drug solution. Carry out the method for thin layer chromatography (Appendix Ⅵ B), using silica gel G as the coating substance and a mixture of petroleum ether (60-90℃), ethyl acetate and acetone (6 : 3 : 0.5) as the mobile phase. Apply separately 5 μl of each of the test solution and the reference drug solution to the plate. After developing and removal of the plate, dry in air, examine under the ultraviolet light at 365 nm. The spots in the chromatogram obtained with the test solution correspond in position and colour to the spots in the chromatogram obtained with the reference drug solution.

(5) Grind 2 g of the granules to fine powder, add 20 ml of methanol, ultrasonicate for 30 minutes, filter, evaporate the filtrate to dryness, and dissolve the residue in 1 ml of methanol as the test solution. Dissolve baicalin CRS in methanol to produce a solution containing 1 mg per ml as the reference solution. Carry out the method for thin layer chromatography (Appendix Ⅵ B), using silica gel G as the coating substance and a mixture of ethyl acetate, butanone, formic acid and water (5 : 3 : 1 : 1) as the mobile phase. Apply separately 5 μl of each of the test solution and the reference drug solution to the plate. After developing and removal of the plate, dry in air, spray with 1% ferric chloride in ethanol. The spot in the chromatogram obtained with the test solution corresponds in position and colour to the spot in the chromatogram obtained with the reference solution.

Other requirements Comply with the general requirements for granules (Appendix Ⅰ C).

Assay Carry out the method for high performance liquid chromatography (Appendix Ⅵ D).

Chromatographic system and system suitability Use octadecylsilane bonded silica gel as the stationary phase and a mixture of methanol, water and glacial acetic acid (50 : 50 : 1) as the mobile phase. As detector a spectrophotometer set at 277 nm. The number of theoretical plates of the column is not less than 3500, calculated with the reference to the peak of baicalin.

Reference solution Dissolve a quantity of baicalin CRS, weigh accurately, in methanol to produce a solution containing 60 μg per ml.

Test solution Grind a quantity of the granules obtained under the test of packing variation to fine powder, weigh accurately 0.5 g to a conical flask with stopper, add accurately 100 ml of 70 % solution of ethanol, weigh, ultrasonicate (power, 250 W; frequency, 33 kHz) for 40 minutes, allow to cool, weigh again, replenish the lost weight with 70% ethanol, mix well, filter by 0.45 μm millipore filter and use the successive filtrate.

Procedure Inject accurately 10 μl of the reference solution and the test solution into the column, and calculate the content.

It contains not less than 90.0 mg of baicalin ($C_{21}H_{18}O_{11}$) per pack, referred to Radix Scutellariae.

Action To clear *heat* and drain *dampness*, and relieve stagnation of *qi* and kill pain.

Indications Jaundice due to *damp-heat* in the *liver* and gallbladder with manifestations of pain in the hypochondria, abdominal distension and fever, nausea and vomiting, poor appetite, lassitude and yellowish skin; hepatitis with above symptoms.

Usage and dosage Taken after dissolved in boiling water; 5-10 g, for children of 1-3 years of age, 10-15 g, for 4-7 years of age, 15 g, for 8-10 years of age, reasonably increased for over 11 years of age; 3 times a day.

Strength 10 g per pack

Storage Preserve in tightly closed containers.

Xiao'er Huadu San (小儿化毒散)

Xiao'er Huadu Powder

Ingredients Calculus Bovis Artifactus 8 g; Margarita 16 g; Realgar 40 g; Radix et Rhizoma Rhei 80 g; Rhizoma Coptidis 40 g; Radix et Rhizoma Glycyrrhizae 30 g; Radix Trichosanthis 80 g; Bulbus Fritillariae Cirrhosae 40 g; Radix Paeoniae Rubra 80 g; Olibanum (processed) 40 g; Myrrha (processed) 40 g; Borneolum Syntheticum 10 g.

Procedure Levigate Realgar and levigate or pulverize Margarita to very fine powder. Pulverize the other eight ingredients, except Calculus Bovis Artifactus and Borneolum Syntheticum, to fine powder. Triturate Borneolum Syntheticum and Calculus Bovis Artifactus with the above powders, sift and mix thoroughly.

Description An orange-yellow to brownish-yellow powder; taste, bitter with cooling sensation.

Identification (1) Microscopical: Fibre bundles bright yellow, with slightly thickened walls and distinct pits. Fibre bundles surrounded by parenchymatous cells containing prisms of calcium oxalate, forming crystal fibres. Bordered pitted vessels large, mostly broken, some bordered pits hexagonal or rhombic, closely arranged. Clusters of calcium oxalate large, 60-140 μm in diameter. Irregular fragments golden yellow or orange-yellow, lustrous. Irregular fragments colourless or pale green, translucent, lustrous, sometimes showing minute and dense sinuous striations.

(2) Sublime a small quantity, dried previously over phosphorous pentoxide. The sublimate is observed under a microscope as colourless irregular sliced crystals.

(3) Heat under reflux 0.6 g with 5 ml of methanol on a water bath for 15 minutes and filter. To the filtrate, add methanol to 5 ml as the test solution. Prepare a solution of 50 mg of Rhizoma Coptidis reference drug as the reference drug solution in the same manner. Dissolve berberine hydrochloride CRS in methanol to produce a solution containing 1 mg per ml as the reference solution. Carry out the method for thin layer chromatography (Appendix Ⅵ B), using silica gel G as the coating substance and a mixture of benzene, ethyl acetate, methanol, isopropanol and concentrated ammonia TS (12 : 6 : 3 : 3 : 1) as the mobile phase. Apply separately 1 μl of each of the three solutions to the plate. After developing in a chamber pre-equilibrated with ammonia vapour and removal of the plate, dry it in air, and examine under ultraviolet light at 365 nm. The yellow fluorescent spots in the chromatogram obtained with the test solution correspond in position and colour to the spots in the chromatogram obtained with the reference drug solution and the reference solution.

(4) Macerate 0.6 g in 20 ml of methanol for 1 hour, filter and evaporate 5 ml of the filtrate to dryness. Dissolve the residue in 5 ml of water, add 0.5 ml of hydrochloric acid, heat on a water bath for 30 minutes and cool immediately. Extract the aqueous solution twice with 20 ml of ether. Combine the extracts and evaporate to dryness. Dissolve the residue in 1 ml of chloroform as the test solution. Prepare a solution of 0.1 g of Radix et Rhizoma Rhei reference drug as the reference drug solution in the same manner. Carry out the method for thin layer chromatography (Appendix Ⅵ B), using silica gel H mixed with sodium carboxymethylcellulose as the coating substance and the upper layer of a mixture of petroleum ether (30-60℃), ethyl formate and formic acid (15 : 5 : 1) as the mobile phase. Apply separately 4 μl of each of the two solutions to the plate. After developing and removal of the plate, dry in air and examine under ultraviolet light at 365 nm. The five orange fluorescent spots in the chromatogram obtained with the test solution correspond in position and colour to the spots in the chromatogram obtained with the reference drug solution. The spots turn red on exposure to ammonia vapour.

(5) Triturate 0.6 g with 5 ml of a 0.1% solution of sodium hydroxide and centrifuge. Decant the supernatant into a separator, add 10 ml of water, shake well and extract with two 15-ml quantities of ethyl acetate. Discard the ethyl acetate extracts, acidify the aqueous solution with dilute hydrochloric acid to pH 1, and extract with two 15-ml quantities of ethyl acetate. Wash the combined extract with a small quantity of water and evaporate to dryness. Dissolve the residue in 1 ml of methanol as the test solution. Dissolve cholic acid CRS in ethanol to produce a solution containing 2 mg per ml as the reference solution. Carry out the method for thin layer chromatography (Appendix Ⅵ B), using silica gel G as the coating substance and a mixture of isooctane, ethyl acetate and glacial acetic acid (15 : 7 : 5) as the mobile phase. Apply separately 2 μl of each of the two solutions to the plate. After developing and removal of the plate, dry in air, spray with 10% sulfuric acid in ethanol, heat at 105℃ for several minutes and examine under ultraviolet light at 365 nm. The fluorescent spot in the chromatogram obtained with the test solution corresponds in position and colour to the spot in the chromatogram obtained

with the reference solution.

Other requirements Comply with the general requirements for powders (Appendix Ⅰ B).

Action To clear *heat* and toxic materials, and to promote blood circulation to reduce swelling.

Indications Swollen painful sores on the mouth, ulcerous pyogenic skin infection, irritability, thirsty and constipation due to interior retention of toxic *heat* and unexhausted pathogenic factors.

Usage and dosage 0.6 g, 1-2 times a day; appropriate reduction of the dosage for children under 3 years of age. For external use, appropriate quantity applied topically.

Storage Preserve in tightly closed containers, protected from moisture.

Xiao'er Huashi Wan (小儿化食丸)

Xiao'er Huashi Pills

Ingredients Massa Medicata Fermentata (charred by stir-baked) 100 g; Fructus Crataegi (charred by stir-baked) 100 g; Fructus Hordei Germinatus (charred by stir-baked) 100 g; Semen Arecae Preparata 100 g; Rhizoma Curcumae (processed with vinegar) 50 g; Rhizoma Sparganii (processed) 50 g; Semen Pharbitidis (charred by stir-baked) 200 g; Radix et Rhizoma Rhei 100 g.

Procedure Pulverize the above eight ingredients to fine powder, sift and mix thoroughly. To each 100 g of the powder add 90-110 g of refined honey to make big honeyed pills.

Description Dark brown big honeyed pills; taste, slightly bitter.

Identification (1) Microscopical: Pericarp stone cells pale purplish-red, red or yellowish-brown, subrounded or polygonal, about 125 μm in diameter. Endospermic pieces colourless, walls relatively thickened, with numerous large subrounded pits. Epidermis cells longitudinally arranged, usually with one long cell and two short cells connected alternatively, walls of the long cells thickened, curved and lignified. Palisade cells of testa pale brown or brown, 48-80 μm long.

(2) Macerate 1 pill, cut into pieces, in 20 ml of methanol for 1 hour, filter and evaporate the filtrate to dryness. To the residue, add 40 ml of water and 4 ml of hydrochloric acid, shake well, heat on a water bath for 30 minutes, cool immediately, extract with two 20-ml quantities of ether and evaporate the combined extract to dryness. Dissolve the residue in 1ml of ethyl acetate as the test solution. Prepare a solution of 0.1g of Radix et Rhizoma Rhei reference drug as the reference drug solution in the same manner. Carry out the method for thin layer chromatography (Appendix Ⅵ B), using silica gel G mixed with sodium carboxymethyl-cellulose as the coating substance and the upper layer of a mixture of petroleum ether (30-60℃), ethyl formate and formic acid (15 : 5 : 1) as the mobile phase. Apply separately 2 μl of each of the two solutions to the plate. After developing and removal of the plate, dry in air and examine under ultraviolet light at 365 nm. The fluorescent spots in the chromatogram obtained with the test solution correspond in position and colour to the spots in the chromatogram obtained with the reference drug solution. The colour of the spots turn to red on exposure the plate to ammonia vapour.

(3) Cut 3 g of the big honeyed pills into pieces, add 1 g of kieseghul, mix well, add 20 ml of ether, ultrasonicate for 15 minutes, filter, evaporate the filtrate to dryness, and dissolve the residue in 1 ml of dehydrated ethanol as the test solution. Prepare a solution of 1 g of Fructus Crataegi reference drug and 15 ml of ether in the same manner as the reference drug solution. Dissolve ursolic acid CRS in dehydrated ethanol to produce a solution containing 1 mg per ml as reference solution. Carry out the method for thin layer chromatography (Appendix Ⅵ B), using silica gel G as the coating substance and a mixture of cyclohexane, chloroform and ethyl acetate (20 : 5 : 8) as the mobile phase. Apply separately 10 μl of the test solution and 2 μl of each of the reference drug solution and the reference solution to the plate. After developing and removal of the plate, dry in air, spray with 10% sulphuric acid in ethanol, heat at 110℃ for 10 minutes. The purplish-red spot in the chromatogram obtained with the test solution corresponds in position and colour to the spot in the chromatogram obtained with the reference drug solution and the reference solution.

(4) Cut 15 g of the big honeyed pills into pieces, add 1 g of kieseghul, mix well, add 50 ml of chloroform and 4 ml of concentrated ammonia TS, hest under reflux for 1 hour, filter. To the filtrate, add 5 ml of dilute hydrochloric acid TS and 20 ml of water, extract by shaking, collect the acid, adjust pH to 8-9 with concentrated ammonia TS, extract with two 10-ml quantities of chloroform, collect the chloroform extracts, recover chloroform, and dissolve the residue in 0.5 ml of methanol as the test solution. Prepare a solution of 1 g of Semen Arecae reference drug, 20 ml of chloroform, and 1 ml of concentrated ammonia TS in the same manner as the reference drug solution. Carry out the method for thin layer chromatography (Appendix Ⅵ B), using silica gel G as the coating substance and a mixture of cyclohexane, ethyl acetate and concentrated ammonia TS (7.5 : 7.5 : 0.2) as the mobile phase. Apply separately 20 μl of the test solution and 2 μl of the reference drug solution to the plate. After developing in the chamber pre-equilibrated with ammonia vapour and removal of the plate, dry in air, spray with dilute solution of potassium heptaiodobismuthates TS. The orange spots in the chromatogram obtained with the test solution correspond in position and colour to the spots in the chromatogram obtained with the reference drug solution.

Other requirements Comply with the general requirements for pills (Appendix Ⅰ A).

Assay Carry out the method for high performance liquid chromatography (Appendix Ⅵ D).

Chromatographic system and system suitability Use octadecylsilane bonded silica gel as the stationary phase and a mixture of methanol, water and phosphoric acid (85 : 15 : 0.05) as the mobile phase. As detector a spectrophotometer set at 289 nm. The number of theoretical plates of the column is not less than 2500, calculated with the reference to the peak of emodin.

Reference solution Disslove a quantity of emodin CRS, weigh accurately, in methanol to produce a solution containing 3 μg per ml.

Test solution Cut the big honeyed pills obtained under the test of weight variation into pieces, to about 6 g, weigh accurately, mix well with equal quantity of kieseghul, weigh accurately 4 g to a conical flask, add accurately 50 ml of methanol, weigh, heat under reflux for 1 hour, allow to cool, weigh again, replenish the lost weight with methanol, mix well, and filter. Measure accurately 10 ml of the filtrate to a round bottomed flask, recover the methanol on a water bath, add 20 ml of a solution of 2.5 mol/L sulfuric acid, ultrasonicate to dissolve for 10 minutes, heat on a water bath for 1 hour, cool immediately, extract with four 25-ml quantities of ether, combine the ether extracts, wash with

15 ml of water, discard the washings, recover the ether on low temperature to dryness, dissolve the residue in a quantity of methanol to a 25 ml of volumetric flask, dilute with methanol to volume, and mix well.

Procedure Inject accurately 10 μl of the reference solution and the test solution into the column, and calculate the content.
It contains not less than 0. 15 mg of emodin ($C_{15}H_{10}O_5$) per pill, referred to Radix et Rhizoma Rhei.

Action To promote digestion to remove retained food, and purge *fire* and relax bowels.

Indications Production of *heat* in food retention, with manifestations of anorexia, irritability, nausea and vomiting, thirst, fullness in the stomach and abdomen, and constipation.

Usage and dosage 1 pill for children under 1 year of age, 2 pills for children over 1 year of age, twice a day.

Precaution Avoid pungent and greasy foods.

Strength 1. 5 g per pill

Storage Preserve in tightly closed containers.

Xiao'er Jiebiao Keli
(小儿解表颗粒)

Xiao'er Jiebiao Granules

Ingredients Flos Lonicerae Japonicae 300 g; Fructus Forsythiae 250 g; Fructus Arctii (stir-baked) 250 g; Herba Taraxaci 300 g; Radix Scutellariae 300 g; Radix Saposhnikoviae 150 g; Folium Perillae 150 g; Spica Schizonepetae 100 g; Radix Puerariae Lobatae 150 g; Calculus Bovis Artifactus 1 g.

Procedure Distil volatile oil from Fructus Forsythiae, Folium Perillae and Spica Schizonepetae, collect the distilled aqueous solution in a separate container. Decoct Flos Lonicerae Japonicae, Fructus Arctii, Herba Taraxaci, Radix Scutellariae, Radix Saposhnikoviae and Radix Puerariae Lobatae with water twice, 2. 5 hours for the first time and 1. 5 hours for the second, filter. Combine the filtrate with the above aqueous solution and concentrate to a thick extract with a relative density of 1. 32-1. 35 (50℃). Make granules with 1 portion of the thick extract, 4 portions of powdered sucrose, 1 portion of dextrin, Calculus Bovis Artifactus and a quantity of ethanol, and dry. Add the above volatile oil and mix well.

Description Yellowish-brown granules; taste, sweet and slightly bitter.

Identification (1) Triturate 15 g of the granules to fine powder, add 40 ml of methanol, ultrasonicate for 20 minutes, filter, evaporate the filtrate to dryness, dissolve the residue in 40 ml of water, extract with two 20-ml quantities of ether, discard the ether extracts, extract the water solution with two 25-ml quantities of ethyl acetate, combine the ethyl extracts, evaporate to dryness, and dissolve the residue in 2 ml of methanol as the test solution. Dissolve chlorogenic acid CRS in methanol to produce a solution containing 0. 2 mg per ml as reference solution. Carry out the method for thin layer chromatography (Appendix Ⅵ B), using polyamide film as the coating substance and acetic acid as the mobile phase. Apply separately 5 μl of the test solution and the reference solution to the plate. After developing and removal of the plate, dry in air, examine under ultraviolet light at 365 nm. The fluorescent spot in the chromatogram obtained with the test solution corresponds in position and colour to the spot in the chromatogram obtained with the reference solution.
(2) To 0. 5 g of Fructus Arctii reference drug, add 20 ml of ethanol, ultrasonicate for 20 minutes, filter, evaporate the filtrate to dryness, and dissolve the residue in 2 ml of methanol as the reference drug solution. Carry out the method for thin layer chromatography (Appendix Ⅵ B), using silica gel G as the coating substance and a mixture of chloroform, methanol and water (40 : 10 : 1) as the mobile phase. Apply separately 5 μl of the test solution obtained under Identification (1) and above the reference drug solution to the plate. After developing and removal of the plate, dry in air, spray with 10% sulphuric acid in ethanol, heat at 105℃ to the spots clear. The spots in the chromatogram obtained with the test solution correspond in position and colour to the spots in the chromatogram obtained with the reference drug solution.
(3) Triturate 10 g to fine powder, add 20 ml of methanol, ultrasonicate for 10 minutes, filter and evaporate the filtrate to dryness, dissolve the residue in 1 ml of methanol as the test solution. Dissolve baicalin CRS in methanol to produce a solution containing 1 mg per ml as the reference solution. Carry out the method for thin layer chromatography (Appendix Ⅵ B), using silica gel G as the coating substance and the upper layer of the mixture of ethyl acetate, butanone, formic acid and water (10 : 7 : 5 : 3) as the mobile phase. Apply separately 5 μl of each of the two solutions to the plate. After developing and removal of the plate, dry in air and spray with 1% ferric chloride in ethanol. The spot in the chromatogram obtained with the test solution corresponds in position and colour to the spot in the chromatogram obtained with the reference solution.
(4) Triturate 10 g of the granules to fine powder, add 30 ml of ethyl acetate, ultrasonicate for 20 minutes, filter, evaporate the filtrate to dryness, dissolve the residue in 1 ml of methanol as the test solution. Dissolve puerarin CRS in methanol to produce a solution containing 0. 5 mg per ml as reference solution. Carry out the method for thin layer chromatography (Appendix Ⅵ B), using silica gel G as the coating substance and the mixture of chloroform, methanol and water (28 : 10 : 1) as the mobile phase. Apply separately 5 μl of each of the test solution and the reference solution to the plate. After developing and removal of the plate, dry in air, examine under ultraviolet light at 365 nm. The fluorescent spot in the chromatogram obtained with the test solution corresponds in position and colour to the spot in the chromatogram obtained with the reference solution.

Other requirements Comply with the general requirements for granules (Appendix Ⅰ C).

Assay Carry out the method for high performance liquid chromatography (Appendix Ⅵ D).

Chromatographic system and system suitability Use octadecylsilane bonded silica gel as the stationary phase and a mixture of methanol, water and glacial acetic acid (50 : 50 : 1) as the mobile phase. As detector a spectrophotometer set at 277 nm. The number of theoretical plates of the column is not less than 3000, calculated with the reference to the peak of baicalin.

Reference solution Dissolve a quantity of baicalin CRS, weigh accurately, in methanol to produce a solution containing 60 μg per ml.

Test solution Triturate the granules obtained under the test of packing variation to fine powder, weigh accurately 0. 8 g of the powder to a 50 ml of volumetric flask, add 40 ml of 70% ethanol, ultrasonicate (power, 250 W; frequency, 40 kHz) for 20 minutes, allow to cool, add 70% ethanol to volume, mix well, allow to stand, and use the supernatant as the test solution.

Procedure Inject accurately 10 μl of each of the reference solution and the test solution into the column, and calculate the content.
It contains not less than 27 mg of baicalin ($C_{21}H_{18}O_{11}$) per pack, referred to Radix Scutellariae.

Action To disseminate *lung-qi* to release the exterior, and clear *heat* to relieve *toxicity*.

Indications Common cold in children due to affliction from external *wind-heat* with manifestations of fever, aversion to wind, headache, coughing, stuffy and running nose, painful and itching throat.

Usage and dosage Taken after dissolved in boiled water; 4 g, for children of 1-2 years of age, twice a day; 4 g, for 3-5 years of age, 2-3 times a day; 8 g, for 6-14 years of age, 2-3 times a day.

Strength 8 g per pack

Storage Preserve in tightly closed containers.

Xiao'er Jindan Pian (小儿金丹片)

Xiao'er Jindan Tablets

Ingredients Cinnabaris 80 g; Exocarpium Citri Rubrum 40 g; Bulbus Fritillariae Cirrhosae 40 g; Arisaema cum Bile 30 g; Radix Peucedani 30 g; Radix Scrophulariae 30 g; Rhizoma Pinelliae (processed with alum) 30 g; Folium Isatidis 30 g; Caulis Aristolochiae Manshuriensis 30 g; Radix Platycodonis 30 g; Spica Schizonepetae 30 g; Rhizoma et Radix Notopterygii 30 g; Cacumen Tamaricis 30 g; Radix Rehmanniae 30 g; Fructus Aurantii (stir-baked) 30 g; Radix Paeoniae Rubra 30 g; Ramulus Uncariae cum Uncis 30 g; Radix Puerariae Lobatae 20 g; Fructus Arctii 20 g; Rhizoma Gastrodiae 20 g; Radix et Rhizoma Glycirrhizae 20 g; Radix Saposhnikoviae 20 g; Borneolum Syntheticum 10 g; Pulvis Cornus Bubali Concentratus 10 g; Pulvis Cornu Saigae Tataricae 5 g; Mentholum 0.1 g.

Procedure Pulverize Borneolum Syntheticum to fine powder. Levigate Cinnabaris to very fine powder. Pulverize Bulbus Fritillariae Cirrhosae, Rhizoma Gastrodiae and Arisaema cum Bile to fine powder, triturate with Pulvis Cornus Bubali Concentratus, Pulvis Cornu Saigae Tataricae and Cinnabaris powder, sift and mix thoroughly. Distill volatile oil from Exocarpium Citri Rubrum, Spica Schizonepetae, Rhizoma et Radix Notopterygii and Radix Peucedani. Decoct the drug residue and the other fourteen ingredients with water twice, 3 hours for the first time and 2 hours for the second time; combine the decoctions, filter and concentrate to a thick extract. Add the above powder and a quantity of excipient to the extract, mix thoroughly, dry, pulverize to fine powder and sift. Make granules, dry, add Borneolum Syntheticum, Mentholum and the volatile oil, mix well and press into tablets.

Description Dark-red tablets; odour, pungent; taste, bitter.

Identification Pulverize 4 tablets to fine powder, triturate the powder with 10 ml of ether, filter and evaporate the filtrate to dryness. Dissolve the residue in 0.5 ml of ethanol as the test solution. Dissolve a mixture of (±)-borneol and (±)-isoborneol CRS in ethanol to produce a mixture containing 2 mg per ml as the reference solution. Carry out the method for thin layer chromatography (Appendix Ⅵ B), using silica gel G as the coating substance and a mixture of petroleum ether (60-90℃), benzene and ethyl acetate (9∶4∶2)as the mobile phase. Apply separately 5 μl of the test solution and 2 μl of the reference solution to the plate. After developing and removal of the plate, dry in air. Spray with 10% phosphomolybdic acid in ethanol, and heat to the spots clear. The spots in the chromatogram obtained with the test solution correspond in position and colour to the spots in the chromatogram obtained with the reference drug solution.

Other requirements Comply with the general requirements for tablets (Appendix Ⅰ D).

Assay Triturate the tablets obtained under the test of weight variation to fine powder, weigh accurately 0.5 g of the fine powder to a conical flask. Heat with 25 ml of sulfuric acid and 2 g of potassium nitrate until become milky-white. Allow to cool, add 50 ml of water, add dropwise a 1% solution of potassium permanganate until a pink colour is produced, and then add dropwise a 2% solution of ferrous sulfate until the pink colour disappears. Add 2 ml of ferric ammonium sulfate IS, titrate with 0.1 mol/L ammonium thiocyanate VS. Each ml of 0.1 mol/L ammonium thiocyanate VS is equivalent to 11.63 mg of HgS.
It contains not less than 32 mg and not more than 39 mg of mercuric sulfide (HgS) for small tablet; not less than 48 mg and not more than 58 mg for big tablet, refered to Cinnabaris.

Action To expel *wind* and resolve phlegm, and clear *heat* to relieve *toxicity*.

Indications Common cold due to affliction from external *wind-heat* and excessive internal *phlegm-fire* with manifestations of fever, headache, coughing, dyspnea, swollen painful throat, vomiting, and convulsion due to high fever.

Usage and dosage 0.6 g, for children of one year of age, 3 times a day; appropriate reduction of the dosage for infants under 1 year of age.

Strength (1) 0.2 g per tablet (2) 0.3 g per tablet

Storage preserve in tightly closed containers.

Xiao'er Jingfeng San (小儿惊风散)

Xiao'er Jingfeng Powder

Ingredients Scorpio 130 g; Bombyx Batryticatus (stir-baked) 224 g; Realgar 40 g; Cinnabaris 60 g; Radix et Rhizoma Glycyrrhizae 60 g.

Procedure Levigate separately Realgar and Cinnabaris to very fine powder. Pulverize the other three ingredients to fine powder. Triturate the above powders. sift and mix well.

Description An orange-yellow or brownish-yellow powder; odour, characteristic; taste, sweet and salty.

Identification (1) Microscopical: Fragments of body walls pale yellow to yellow, with reticulate striations and rounded alveoli, sometimes showing brown setae. Fragments of body walls colourless, with very fine hyphae. Fibre bundles surrounded by parenchymatous cells containing prisms of calcium oxalate, forming crystal fibres. Irregular minute granules dark brownish-red, lustrous, with dark black edge. Irregular fragments golden yellow or orange, lustrous.
(2) Dissolve 1 g in 5 ml of a mixture of hydrochloric acid and nitric acid (3∶1) by heating on a water bath and evaporate to dryness. Dissolve the residue in 10 ml of water and filter.

To 2 ml of the filtrate add several drops of stannous chloride TS, a white precipitate is produced and the precipitate turns rapidly greyish-black. To another 2 ml of the filtrate add several drops of potassium iodide TS; a vermillion precipitate is produced, the precipitate can be dissolved in an excess of potassium iodide TS.

(3) Heat 0.2 g in a crucible until a white fume is produced, and cover with a slide, a white condensate is produced. Place the slide in a beaker and dissolve the condensate in 10 ml of water by heating. To 5 ml of the solution add several drops of hydrogen sulfide TS, a yellow colour is produced, and a yellow flocculent precipitate is produced on adding dilute hydrochloric acid. The precipitate is dissolved on adding ammonium carbonate TS.

(4) Moisten 0.2 g with water and dissolve in 2 ml of nitric acid solution saturated with potassium chlorate, add a 10% solution of barium chloride; a white precipitate is produced, the precipitate is insoluble in water.

Other requirements Comply with the general requirements for powders (Appendix Ⅰ B).

Action To relieve convulsion and extinguish *wind*.

Indications Child convulsion and coma.

Usage and dosage 1.5 g, twice a day for children of 1 year of age; appropriate reduction of the dosage for children under 1 year of age.

Strength 1.5 g per pack

Storage Preserve in tightly closed containers.

Xiao'er Kechuan Keli
(小儿咳喘颗粒)

Xiao'er Kechuan Granules

Ingredients Herba Ephedrae 90 g; Bulbus Fritillariae Cirrhosae 90 g; Semen Armeniacae Amarum (stir-baked) 150 g; Radix Scutellariae 150 g; Concretio Silicea Bambusae 150 g; Fructus Perillae (stir-baked) 180 g; Bombyx Batryticatus (stir-baked) 180 g; Fructus Crataegi (stir-baked) 180 g; Semen Raphani (stir-baked) 180 g; Gypsum Fibrosum 300 g; Herba Houttuyniae 360 g; Radix et Rhizoma Asari 15 g; Tea 15 g; Radix et Rhizoma Glycyrrhizae 90 g; Radix Platycodi 150 g.

Procedure Pulverize Bulbus Fritillariae Cirrhosae to fine powder. Extract the volatile oil of Radix et Rhizoma Asari and Herba Houttuyniae and keep the aqueous solution after distillation for later use. Decoct the residue and the other twelve ingredients twice, each for 1.5 hours, combine the decoctions, filter, combine the filtrates and the above remaining aqueous solution, and concentrate to a thick extract with a relative density of 1.38-1.40 (85℃). To the extract add quantities of sucrose and dextrin, as well as the fine powder of Bulbus Fritillariae Cirrhosae, mix well, make into granules and dry. To the granules add by spraying the volatile oils of Radix et Rhizoma Asari and Herba Houttuyniae, mix well, and make to 1000 gram.

Description Yellowish-brown to brown granules; odour, with slightly cool feeling; taste, sweet and slightly bitter.

Identification (1) Microscopical: Starch granules broad ovoid or in shell-like shape, 40-64 μm in diameter, hila in short-cleft, V-shaped or U-shaped, striations visible.

(2) Dissolve 6 g, in fine powder, with 30 ml of hot water, filter, allow to cool, add 3 ml of concentrated ammonia TS, shake well, extract with 60 ml of ether by shaking, separate the ether layer, expel the ether, and dissolve the residue in 1 ml of methanol as the test solution. Dissolve ephedrin hydrochloride CRS in methanol to produce a solution containing 1 mg per ml as the reference solution. Carry out the method for thin layer chromatography (Appendix Ⅵ B), using silica gel G as the coating substance and the lower layer of a mixture of chloroform, methanol and concentrated ammonia (5 : 1 : 0.1), by standing under 10℃, as the mobile phase. Apply separately to the plate 10 μl of each of the test solution and the reference solution. After developing and removal of the plate, spray with 0.5% ninhydrin in ethanol, heat at 105℃ to the spot clear. The spot in chromatogram obtained with the test solution corresponds in position and colour to the spot in the chromatogram obtained with the reference solution.

(3) Ultrasonicate 3 g with 30 ml of methanol for 30 minutes, allow to cool, filter, concentrate the filtrate to about 5 ml, and use it as the test solution. Dissolve baicalin CRS in methanol to produce a solution containing 1 mg per ml as the reference solution. Carry out the method for thin layer chromatography (Appendix Ⅵ B), using polyamide membrane as the coating substance and acetic acid as the mobile phase. Apply separately to the plate 1 μl of each of the test solution and the reference solution. After developing and removal of the plate, examine under ultraviolet light at 365 nm. A fluorescent spot in chromatogram obtained with the test solution corresponds in position and colour to the fluorescent spot in the chromatogram obtained with the reference solution.

Other requirements Comply with the general requirements for granules (Appendix Ⅰ C).

Assay Carry out the method for high performance liquid chromatography (Appendix Ⅵ D).

Chromatography system and system suitability Use octadecylsilane bonded silica gel as the stationary phase and a mixture of methanol and water (1 : 1) as the mobile phase. As detector a spectrophotometer set at 254 nm. The number of theoretical plates of the column is not less than 3000, calculated with reference to the peak of ephedrin hydrochloride.

Reference solution Dissolve 12.5 mg of ephedrin hydrochloride CRS, weighed accurately, in a 100 ml volumetric flask, dilute to volume with water, and shake well. Transfer accurately 5 ml to a 100 ml volumetric flask, dilute to volume with water, and shake well. Transfer accurately 10 ml to a 25 ml volumetric flask, add 1 ml of periodic acid (0.25 g → 10 ml) and 2.5 ml of 0.25 mol/L sodium hydroxide, shake well, allow to stand for 30 minutes, adjust to pH 7 with 0.5 mol/L hydrochloric acid, add methanol to volume, shake well, and use it as the reference solution (containing 2.5 μg of ephedrin hydrochloride per ml).

Test solution Grind the granules, obtained under the test of packing variation, into fine powder, weigh accurately 2 g, add 120 ml of 5 mol/L sodium hydroxide, and shake well. Add 7.5 g of sodium chloride, ultrasonicate (power, 250 W; frequency, 33 kHz) for 10 minutes, distill, collect nearly 95 ml of the distillate with a 100 ml volumetric flask, containing 5 ml of 0.5 mol/L hydrochloric acid, add water to volume, and shake well. Transfer accurately 10 ml to a 25 ml volumetric flask, carry out the Procedure as described under reference solution, beginning at the words "add 1 ml of periodic acid" to "add methanol to volume", shake well, filter and use the successive filtrate as the test solution.

Procedure Inject accurately 10 μl of each of the reference solution and the test solution into the column, repectively, and calculate the content.

It contains not less than 1.2 mg of ephedrin hydrochloride ($C_{10}H_{15}NO \cdot HCl$) per pack, referred to Herba Ephedrae.

Action To clear *heat* and disseminate *lung-qi*, resolve phlegm and check coughing, and send *qi* downward to relieve asthma.

Indications Coughing, fever, excessive phlegm and asthma due to *phlegm-heat* accumulation in the *lung*.

Usage and dosage Taken with warm bolied water, 2-3 g under 1 year old, 3-6 g between 1-5 years old, 9-12 g over 6 years old, 3 times a day.

Strength 6 g per pack

Storage Preserve in tightly closed containers.

Xiao'er Qingre Pian (小儿清热片)

Xiao'er Qingre Tablets

Ingredients Cortex Phellodendri Chinensis 117.6 g; Medulla Junci 23.5 g; Fructus Gardeniae 117.6 g; Ramulus Uncariae cum Uncis 47 g; Realgar 47 g; Rhizoma Coptidis 70.6 g; Cinnabaris 23.5 g; Radix et Rhizoma Gentianae 47 g; Radix Scutellariae 117.6 g; Radix et Rhizoma Rhei 47 g; Oleum Menthae Dementholatum 0.47 g.

Procedure Levigate respectively Cinnabaris and Realgar to very fine powder; pulverize Rhizoma Coptidis and Radix et Rhizoma Rhei to fine powder; percolate Cortex Phellodendri Chinensis and Radix Gentianae with 70% ethanol, collect the percolation, recover ethanol and concentrate to a thick extract; decoct the other four ingredients except Oleum Menthae Dementholatum with water twice, 2 hours for each time, combine the decoctions, filter and concentrate the filtrate to a thick extract. Mix the above two thick extracts and the fine powders, dry, pulverize, make granules and dry. Add Oleum Menthae Dementholatum, press into 1000 tablets and coat with sugar.

Description Sugar coated tablets with brownish-yellow core; odour, characteristic; taste, bitter.

Identification (1) Microscopical: Fibre bundles bright yellow, walls slightly thickened, with distinct pits. Irregular pieces golden yellow or orange-yellow, lustrous. Irregular fine granules dark brownish-red, lustrous, with dark black edges. Clusters of calcium oxalate large, 60-140 μm in diameter.

(2) Pulverize 8 tablets with coating removed to fine powder, apply to a column (1.5-2 cm in internal diameter) packed with neutral aluminium oxide (200-300 mesh, 5 g, dry-method packing), elute with 50 ml of dehydrated ethanol and evaporate the eluate to dryness. Dissolve the residue in 2 ml of ethanol to produce a solution as the test solution. To 0.5 g of Rhizoma Coptidis reference drug add 5 ml of methanol, ultrasonicate for 15 minutes, filter and dilute the filtrate with 5 ml of methanol to produce a solution as the reference drug solution. Dissolve berberine hydrochloride CRS in methanol to produce a solution containing about 0.5 mg per ml as the reference solution. Carry out the method for thin layer chromatography (Appendix VI B), using silica gel G as the coating substance and a mixture of benzene, ethyl acetate, methanol, isopropanol and concentrated ammonia TS (12 : 6 : 3 : 3 : 1) as the mobile phase. Apply separately 1 μl of each of the three solutions to the plate. After developing in a chamber pre-equilibrated with ammonia vapour and removal of the plate, dry in air and examine under ultraviolet light at 365 nm. The yellow fluorescent spots in the chromatogram obtained with the test solution correspond in position and colour to the spots in the chromatogram obtained with the reference drug solution and with the reference solution.

(3) Pulverize 8 tablets with coating removed to fine powder, add 30 ml of methanol, heat under reflux for 1 hour, filter, evaporate 10 ml of the filtrate to dryness, and dissolve the residue in 1 ml of ethyl acetate as the test solution. Dissolve geniposide CRS in ethanol to produce a solution containing 0.5 mg per ml as the reference solution. Carry out the method for thin layer chromatography (Appendix VI B), using silica gel G as the coating substance and a mixture of ethyl acetate, acetone, formic acid and water (5 : 5 : 1 : 1) as the mobile phase. Apply separately 10 μl of the test solution and 5 μl of the reference solution to the plate. After developing and removal of the plate, dry in air, spray with 10% solution of sulphuric acid in ethanol, and heat at 105℃ for about 10 minutes. The spot in the chromatogram obtained with the test solution corresponds in position and colour to the spot in the chromatogram obtained with the reference solution.

(4) Pulverize 5 tablets with coating removed to fine powder, add 10 ml of methanol, ultrasonicate for 15 minutes, allow to cool, filter, evaporate the filtrate to dryness, and dissolve the residue in 2 ml of methanol as the test solution. Dissolve baicalin CRS in methanol to produce a solution containing 1 mg per ml as the reference solution. Carry out the method for thin layer chromatography (Appendix VI B), using silica gel G mixed with sodium carboxymethylcellulose containing 4% solution of sodium acetate as the coating substance and a mixture of ethyl acetate, butanone, formic acid and water (5 : 3 : 1 : 1) as the mobile phase. Apply separately 2 μl of the test solution and 5 μl of the reference solution to the plate. After developing in the chamber pre-equilibrated for 30 minutes and removal of the plate, dry in air, spray with 1% solution of ferric chloride in ethanol. The dark green spot in the chromatogram obtained with the test solution corresponds in position and colour to the spot in the chromatogram obtained with the reference solution.

(5) Pulverize 5 tablets with coating removed to fine powder, add 10 ml of methanol, ultrasonicate for 15 minutes, allow to cool, filter evaporate the filtrate to dryness, dissolve the residue in 10 ml of water, add 1 ml of hydrochloric acid, heat under reflux on a water bath for 30 minutes, allow to cool immediately, extract with ether for 2 times, 20 ml for each time, combine the ether extracts, recover the ether, and dissolve the residue in 2 ml of methanol as the test solution. Prepare a solution of 0.1 g of Radix et Rhizoma Rhei reference drug in the same manner as the reference solution. Carry out the method for thin layer chromatography (Appendix VI B), using silica gel G as the coating substance and the upper layer of a mixture of petroleum ether (30-60℃), ethyl formate and formic acid (15 : 5 : 1) as the mobile phase. Apply separately 4 μl of the test solution and the reference drug solution to the plate. After developing and removal of the plate, dry in air, and examine under ultraviolet light at 365 nm. The five orange fluorescent spots in the chromatogram obtained with the test solution correspond in position and colour to the spots in the chromatogram obtained with the reference drug solution. Examine in daylight, the colour of the spots turn to red on exposure to ammonia vapour.

Other requirements Comply with the general requirements for tablets (Appendix I D).

Assay Carry out the method for high performance liquid chromatography (Appendix VI D).

Chromatographic system and system suitability Use octadecylsilane bonded silica gel as the stationary phase and a mixture of methanol and water (25 : 75) as the mobile

phase. As detector a spectrophotometer set at 238 nm. The number of theoretical plates of the column is not less than 1500, calculated with the reference to the peak of geniposide.

Reference solution Disslove a quantity of geniposide CRS, weigh accurately, in methanol to produce a solution containing 50 μg per ml.

Test solution To 20 tablets with coating removed, weigh accurately, pulverize to fine powder, weigh accurately 0.5 g of the powder, add accurately 50 ml of methanol, ultrasonicate (power, 300 W; frequency, 50 kHz) for 30 minutes, allow to cool, weigh again, replenish the lost weight with methanol, mix well, and filter. Measure accurately 10 ml of the successive filtrate to a 25 ml of volumetric flask, dilute with methanol to the volume, and mix well.

Procedure Inject accurately 10 μl of the reference solution and the test solution into the column, and calculate the content.
It contains not less than 1.5 mg of geniposide ($C_{17}H_{24}O_{10}$) per tablet, referred to Fructus Gardeniae.

Action To clear *heat* and *toxicity*, and expel *wind* and relieve convulsion.

Indications Irritability, convulsion, fever, aphtha with concentrated urine and constipation due to attack by *wind-heat* in children.

Usage and dosage 2-3 tablets, 1-2 times a day; appropriate reduction of the dosage for children under 1 year of age.

Storage Preserve in tightly closed containers.

Xiao'er Qingre Zhike Koufuye (小儿清热止咳口服液)

Xiao'er Qingre Zhike Mixture

Ingredients Herba Ephedrae 90 g; Semen Armeniacae Amarum (stir-baked) 120 g; Gypsum Fibrosum 270 g; Radix et Rhizoma Glycirrhizae 90 g; Radix Scutellariae 180 g; Radix Isatidis 180 g; Rhizoma Menispermi 90 g.

Procedure Decoct previously Herba Ephedrae and Gypsum Fibrosum with water for 30 minutes, then add the other five ingredients, decoct 2 times, 2 hours for the first time and 1 hour for the second. Combine the decoctions, filter, concentrate the filtrate in vacuum to about 600ml, allow to stand for 24 hours and filter. Add 200 g of honey, 100 g of sucrose and 3 g of sodium benzoate to the filtrate, boil to dissolve, add water to a total volume of 1000 ml and stir well. Refrigerate for 24-48 hours, filter, pack, seal and sterilize.

Description A brownish-yellow liquid, taste, sweet and slightly bitter.

Identification (1) To 20 ml add 1 ml of concentrated ammonia TS, extract with two 20-ml quantities of ether. Combine the extracts, add 1 ml of a solution of hydrochloric acid in ethanol (1→20), mix well and evaporate to dryness. Dissolve the residue in 1 ml of methanol as the test solution. Dissolve ephedrine hydrochloride CRS in methanol to produce a solution containing 1 mg per ml as the reference solution. Carry out the method for thin layer chromatography (Appendix Ⅵ B), using silica gel G as the coating substance and a mixture of chloroform, methanol and concentrated ammonia TS (20 : 3.5 : 0.5) as the mobile phase. Apply separately each of the two solutions. to the plate 10 μl After developing and removal of the plate, dry in air, spray with ninhydrin TS and heat at 105℃ for about 10 minutes. The red spot in the chromatogram obtained with the test solution corresponds in position and colour to the spot in the chromatogram obtained with the reference solution.
(2) To 20 ml add 3 ml of hydrochloric acid and 30 ml of chloroform, heat under reflux for 1 hour, allow to cool, filter, evaporate the chloroform extract to dryness, dissolve the residue in 1 ml of methanol as the test solution. Dissolve glycyrrhetinic acid CRS in methanol to produce a solution containing 1 mg per ml as the reference solution. Carry out the method for thin layer chromatography (Appendix Ⅵ B), using silica gel G as the coating substance and a mixture of n-hexane, ethyl acetate, acetone and formic acid (10 : 2 : 4 : 0.1) as the mobile phase. Apply separately 5 μl of the test solution and the reference solution to the plate. After developing and removal of the plate, dry in air, spray with 10% solution of phosphomolybdic acid, and heat at 105℃ to the spot clear. The spot in the chromatogram obtained with the test solution corresponds in position and colour to the spot in the chromatogram obtained with the reference solution.
(3) To 2 ml adds 8 ml of ethanol, mix well, allow to stand, and use the supernatant as the test solution. Dissolve baicalin CRS in methanol to produce a solution containing 1 mg per ml as the reference solution. Carry out the method for thin layer chromatography (Appendix Ⅵ B), using silica gel G as the coating substance and a mixture of ethyl acetate, butanone, formic acid and water (5 : 3 : 1 : 1) as the mobile phase. Apply separately 3 μl of the test solution and the reference solution to the plate. After developing and removal of the plate, dry in air, spray with 1% solution of ferric chloride in ethanol. The spot in the chromatogram obtained with the test solution corresponds in position and colour to the spot in the chromatogram obtained with the reference solution.

Relative density Not less than 1.04 (Appendix Ⅶ A).

pH value 3.5-5.5 (Appendix Ⅶ G).

Other requirements Comply with the general requirements for mixtures (Appendix Ⅰ J).

Assay Carry out the method for high performance liquid chromatography (Appendix Ⅵ D).

Chromatographic system and system suitability Use octadecylsilane bonded silica gel as the stationary phase and a mixture of acetonitrile and 0.1% solution of phosphoric acid containing 0.1% solution of triethylamine (3 : 97) as the mobile phase. As detector a spectrophotometer set at 205 nm. The number of theoretical plates of the column is not less than 4000, calculated with the reference to the peak of ephedrine hydrochloride.

Reference solution Dissolve a quantity of ephedrine hydrochloride CRS, weigh accurately, in 0.1 mol/L solution of hydrochloric acid to produce a solution containing 45 μg per ml.

Test solution Measure accurately 5 ml, add 10 ml of water and 0.5 ml of concentrated ammonia TS, extract with 30, 30, 20, 20 and 20 ml quantities of ether, combine the ether extracts, add 2 ml of a mixture of hydrochloric acid and ethanol (1 : 20), mix well, recover the solvents to dryness at low temperature, dissolve the residue in 5 ml of ethanol to a 25 ml of volumetric flask, dilute with 0.1 mol/L solution of hydrochloric acid to the volume, and mix well.

Procedure Inject accurately 10 μl of the reference solution and the test solution into the column, and calculate the content.
It contains not less than 0.15 mg of ephedrine hydrochloride

($C_{10}H_{15}NO \cdot HCl$) per ml, referred to Herba Ephedrae.

Action To clear *heat* and disseminate the lung, relieve dyspnea, and ease the throat.

Indications Fever, aversion to cold, coughing with expectoration of yellow phlegm, shortness of breath, dry mouth, hoarseness and swollen painful throat in children due to affliction from external *wind-heat* and abundant internal toxic materials.

Usage and dosage 3-5 ml, for children of 1-2 years of age, 5-10 ml, for 3-5 years of age and 10-15 ml, for 6-14 years of age, 3 times a day, taken after shaked well.

Strength 10 ml per phial

Storage Preserve in tightly closed containers.

Xiao'er Resuqing Koufuye (小儿热速清口服液)

Xiao'er Resuqing Mixture

Ingredients Radix Bupleuri; Radix Scutellariae; Radix Isatidis; Radix Puerariae Lobatae; Flos Lonicerae Japonicae; Cornus Bubali; Fructus Forsythiae; Radix et Rhizoma Rhei.

Procedure Distil volatile oil from Radix Bupleuri, Flos Lonicerae Japonicae and Fructus Forsythiae, collect the volatile oil and keep respectively the aqueous solution and the drug residue. Decoct previously Cornu Bubali with water for 3 hours, then decoct with the above drug residue and other four ingredients twice, 1 hour for each time respectively. Filter the combined decoctions, combine the filtrate with the above aqueous solution, concentrate to a quantity, add ethanol to a content of 65% of ethanol and stir well. Recover ethanol from the supernatant, concentrate to a thick extract with a relative density of 1.10-1.15 (90-95℃), cool, mix with the volatile oil and a quantity of corrective, adjust the pH of the extracte to a regulated value. Add water to a volume of 1000 ml, stir well, allow to stand, filter, pack and sterilize.

Description A reddish-brown clear liquid; odour, aromatic; taste, sweet and slightly bitter.

Identification (1) Evaporate 30 ml to almost dryness, triturate well with 10 g of kieselguhr, ultrasonicate with 50 ml of ethyl acetate for 30 minutes, filter and evaporate the filtrate to dryness. Dissolve the residue in 1 ml of methanol to produce a solution as the test solution. Dissolve puerarin CRS in methanol to produce a solution containing 1 mg per ml as the reference solution. Carry out the method for thin layer chromatography (Appendix Ⅵ B), using silica gel G as the coating substance and a mixture of chloroform, methanol and water (7 : 2.5 : 0.25) as the mobile phase. Apply separately 3 μl of each of the two solutions to the plate. After developing and removal of the plate, dry in air and examine under ultraviolet light at 365 nm. The fluorescent spot in the chromatogram obtained with the test solution corresponds in position and colour to the spot in the chromatogram obtained with the reference solution.
(2) Extract 20 ml of the liquid with two 15-ml quantities of ether, concentrate the combined extract to about 1 ml as the test solution. To 0.2 g of Radix et Rhizoma Rhei reference drug add 10 ml of ether, shake for 20 minutes, filter and concentrate the filtrate to about 1 ml as the reference drug solution. Carry out the method for thin layer chromatography (Appendix Ⅵ B), using silica gel G as the coating substance and a mixture of benzene, ethyl acetate and formic acid (7.5 : 2.4 : 0.1) as the mobile phase. Apply separately 5 μl of each of the two solutions to the plate. After developing and removal of the plate, dry in air and examine under ultraviolet light at 365 nm. The fluorescent spots in the chromatogram obtained with the test solution correspond in position and colour to the spots in the chromatogram obtained with the reference drug solution.
(3) To a quantity of the liquid, test according to the method of Assay, the retention time of the peaks obtained with the test solution and the reference solution is concordant with each other.

Relative density Not less than 1.08 (Appendix Ⅶ A).

pH value 4.5-7.0 (Appendix Ⅶ G).

Other requirements Comply with the general requirements for mixtures, (Appendix Ⅰ J).

Assay Carry out the method for high performance liquid chromatography (Appendix Ⅵ D).

Chromatographic system and system suitability Use octadecylsilane bonded silica gel as the stationary phase and a mixture of methanol, water and phosphoric acid (47 : 53 : 0.2) as the mobile phase. As detector a spectrophotometer set at 276 nm. The number of theoretical plates of the column is not less than 2500, calculated with the reference to the peak of baicalin.

Reference solution Dissolve about 10 mg of baicalin CRS, weighed accurately, in a quantity of 50% methanol in a 200 ml volumetric flask by heating on a warm water bath with shaking, allow to cool, dilute with 50% methanol to volume, and mix well (containing 50 μg of baicalin per ml).

Test solution Carry out the method for column chromatography (Appendix Ⅵ C), apply accurately 0.5 ml to a column (1.5 cm in internal diameter, 10 cm long), packed with macroporous resin D_{101}, wash with 70 ml of water, then elute with 40% ethanol at flow rate of 1.5 ml per minute, discard 7-9 ml of the initial eluate, collect the successive eluate in a 50 ml volumetric flask to volume and mix well.

Procedure Accurately inject 5 μl of the reference solution and 10 μl of the test solution, respectively, into the column and calculate the content.
It contains not less than 2.2 mg of baicalin ($C_{21}H_{18}O_{11}$) per ml, referred to Radix Scutellariae.

Action To clear *heat* to relieve *toxicity*, and purge *fire* to ease the throat.

Indications Common cold in children due to affliction from external *wind-heat* with manifestations of high fever, headache, swollen painful throat, stuffy nose and running nose, coughing and dry stools.

Usage and dosage 2.5-5.0 ml, for children under 1 year of age, 5-10 ml, for 1-3 years of age, 10-15 ml, for 3-7 years of age, 15-20 ml, for 7-12 years of age; 3-4 times a day.

Precaution In serious condition or no effect seen taking it for 24 hours increase the dosage appropriately.

Strength 10 ml per phial

Storage Tightly closed, protected from light.

Xiao'er Zhibao Wan (小儿至宝丸)

Xiao'er Zhibao Pills

Ingredients Folium Perillae 50 g; Herba Pogostemonis 50

g; Herba Menthae 50 g; Rhizoma et Radix Notopterygii 50 g; Pericarpium Citri Reticulatae 50 g; Rhizoma Typhonii (processed) 50 g; Arisaema cum Bile 50 g; Semen Sinapis Albae (stir-baked) 30 g; Bulbus Fritillariae Cirrhosae 50 g; Semen Arecae 50 g; Fructus Crataegi (stir-baked) 50 g; Poria 200 g; Massa Medicata Fermentata (stir-baked) 200 g; Fructus Hordei Germinatus (stir-baked) 50 g; Succinum 30 g; Borneolum Syntheticum 4 g; Rhizoma Gastrodiae 50 g; Ramulus Uncariae cum Uncis 50 g; Bombyx Batryticatus (stir-baked) 50 g; Periostracum Cicadae 50 g; Scorpio 50 g; Calculus Bovis Artifactus 6 g; Realgar 50 g; Talcum 50 g; Cinnabaris 10 g.

Procedure Levigate separately Realgar and Cinnabaris to very fine powder. Pulverize the other twenty one ingredients, except Calculus Bovis Artifactus and Borneolum Syntheticum, to fine powder. Triturate Calculus Bovis Artifactus and Borneolum Syntheticum with all the above powders, sift and mix thoroughly. To each 100 g of the powder add 110-140 g of refined honey to make big honeyed pills.

Description Orange-yellow to brownish-yellow big honeyed pills; odour, slightly aromatic; taste, slightly bitter, pungent and cool.

Identification (1) Microscopical: Starch granules broad ovoid or conchoidal, 40-64 μm in diameter, hila short slit shaped, V-shaped or U-shaped, and striated. Irregular branched masses colourless, dissolved in chloral hydrate solution, hyphae colourless or pale brown, 4-6 μm in diameter. Mesophyll containing minute clusters of calcium oxalate, 4-8 μm in diameter. Fine needle crystals of calcium oxalate scattered in mesophyll. Needle crystals of calcium oxalate in bundles or isolated, about 90 μm in length. Prisms of calcium oxalate abundant in parenchyma. Sand crystals of calcium oxalate occurring in parenchymatous cells, sometimes crystal cells connected in rows. Vittae containing brownish-yellow secretion, about 100 μm in diameter. Fragments of chitin shell yellowish-brown, translucent, densely covered with papillose or short-spiny protrudings. Stone cells of pericarp purplish-red, red or yellowish-brown, subrounded or polygonal, about 125 μm in diameter. Epidermal cells often arranged in a longitudinal row with one long cell and two short cells connected alternatively, the long cells with thickened, sinuous and lignified walls. Fragments of endosperm colourless, with relatively thickened walls and numerous large subrounded pits. Palisade cells of testa small, polygonal, with walls thickened in surface view, and subrectangular with thickened lateral and internal walls in lateral view. Fragments of body walls colourless, with very fine hyphae. Fragments of body walls pale yellow or yellow, with reticulate striations and rounded alveoli, sometimes brown setae visible. Irregular fragments golden yellow or orange, lustrous. Irregular minute granules brownish-red and lustrous, with dark black edge.

(2) Triturate well 4.5 g of the pills, cut into pieces, with 2 g of kieselguhr, macerate in 15 ml of ether for 30 minutes, filter and evaporate the filtrate to dryness. Dissolve the residue in 1 ml of chloroform to produce a mixture as the test solution. Dissolve a mixture of (±)-borneol and (±)-isoborneol CRS in petroleum ether (60-90℃) to produce mixture containing 5 mg of each per ml as the reference solution. Carry out the method for thin layer chromatography (Appendix Ⅵ B), using silica gel G as the coating substance and a mixture of cyclohexane, chloroform and ethyl acetate (9 : 1 : 2) as the mobile phase. Apply separately 5 μl of the test solution and 2 μl of the reference solution to the plate. After developing and removal of the plate, dry in air, spray with 1% vanillin in sulfuric acid and heat at 105℃ for 3 minutes. The spots in the chromatogram obtained with the test solution correspond in position and colour to the spots in the chromatogram obtaind with the reference solution.

(3) To 0.5 g of Rhizoma et Radix Notopterygii reference drug add 5 ml of ether, macerate for 30 minutes, filter and evaporate the filtrate to dryness. Dissolve the residue in 1 ml of chloroform to produce a mixture as the reference drug solution. Carry out the method for thin layer chromatography (Appendix Ⅵ B), using silica gel G as the coating substance and *n*-hexane and ethyl acetate (4 : 1) as the mobile phase. Apply separately 5 μl of the test solution obtained in the test for Identification (2) and 2 μl of the reference drug solution to the plate. After developing and removal of the plate, dry in air and spray with sulfuric acid. The black spots in the chromatogram obtained with the test solution correspond in position and colour to the spots in the chromatogram obtained with the reference drug solution.

Other requirements Comply with the general requirements for pills (Appendix Ⅰ A).

Action To subside *wind* to relieve convulsion, and resolve *phlegm* and remove retained undigested food.

Indications Common cold in children due to *wind-cold* with manifestations of no desire for food or milk, high fever, stuffy nose, coughing with expectoration of profuse phlegm, vomiting and diarrhea.

Usage and dosage 1 pill, 2-3 times a day.

Strength 1.5 g per pill

Storage Preserve in tightly closed containers.

Xiaohuoluo Wan
(小活络丸)

Xiaohuoluo Pills

Ingredients Arisaema cum Bile 180 g; Radix Aconiti Praeparata 180 g; Radix Aconiti Kusnezoffii Praeparata 180 g; Pheretima 180 g; Olibanum (processed) 66 g; Myrrha (processed) 66 g.

Procedure Pulverize the above six ingredients to fine powder, sift and mix thoroughly. To each 100 g of the powder add 120-130 g of refined honey to make big honeyed pills.

Description Blackish-brown to black big honeyed pills; odour, stinking; taste, bitter.

Identification Microscopical: Irregular masses colourless or pale yellow, diffused with plenty of minute granules on the surface and around, dissolved on long standing. Stone cells rectangular or subsquare, with slightly thickened walls. Needle Crystals of calcium oxalate in bundles or scattered, about 90 μm long.

Limit test for aconitine To 14 g of the big honeyed pills, cut into pieces, add 10 g of kieseghul, mix well, macerate with 10 ml of concentrated ammonia TS, allow to stand for 2 hours, add 50 ml of ether, shake frequently, allow to stand for 24 hours, mix well, filter, wash the drug residue with 20 ml of ether for several times, combine the washings and filtrate, extract with three 30-ml quantities of dilute hydrochloric acid, combine the acid solutions, adjust pH to 9 with concentrated ammonia TS, extract with three 30-ml quantities of ether, combine the ether extracts, dehydrate water with dehydrated sodium sulfate, filter, evaporate the filtrate to dryness, and dissolve the residue in 1 ml of dehydrated ethanol as the test solution. Dissolve accurately

aconitine CRS in dehydrated ethanol to produce a solution containing 1 mg per ml as the reference solution. Carry out the method for thin layer chromatography (Appendix Ⅵ B), using silica gel G mixed with sodium carboxy methylcellulose as the coating substance and a mixture of benzene, ethyl acetate and diethylamine (14 : 4 : 1) as the mobile phase. Apply separately 12 μl of the test solution and 5 μl of the reference solution to the plate. After developing and removal of the plate, dry in air, spray with diluted solution of potassium heptaiodobismuthate TS. The spots in the chromatogram obtained with the test solution are smaller or no in position and colour than the spots in chromatogram obtained with the reference solution.

Other requirements Comply with the general requirements for pills (Appendix Ⅰ A).

Action To expel *wind* and *cold*, resolve *phlegm* and eliminate *dampness*, and promote blood circulation to kill pain.

Indications Obstruction of *qi* and blood with pain due to accumulation of *wind*, *cold* and *dampness*, and *phlegm* blocking meridians, with manifestations of pain, or cold pain, or pricking pain of the joints of limbs, or pain aggravated at night, immobilized joints, muscular numbness or contracture.

Usage and dosage 1 pill, twice a day, taken with yellow rice wine or warm boiled water.

Precaution Contraindicated for pregnant women.

Strength 3 g per pill

Storage Preserve in tightly closed containers.

Xiaojianzhong Heji (小建中合剂)

Xiaojianzhong Mixture

Ingredients Ramulus Cinnamomi 111 g; Radix Paeoniae Alba 222 g; Radix Et Rhizoma Glycyrrhizae Praeparata Cum Melle 74 g; Rhizoma Zingiberis Recens 111 g; Fructus Jujubae 111 g.

Procedure Distil volatile oil from Ramulus Cinnamomi and collect the aqueous solution after distillation in another container. Decoct the drug residue, Radix Et Rhizoma Glycyrrhizae Praeparata Cum Melle and Fructus Jujubae with water 2 times, 2 hours for each time, combine the decoctions and filter. Combine the filtrate with the above aqueous solution and concentrate to about 560 ml. Carry out the method for percolation as directed under Liquid Extracts and Extracts (Appendix Ⅰ O), macerate Radix Paeoniae Alba and Rhizoma Zingiberis Recens for 24 hours and percolate, using 50% ethanol as solvent. Collect the percolate, recover ethanol and mix with the above concentrated decoction. Allow it to stand, filter, add 370 g of maltose and concentrate to about 1000 ml. To the solution add 3 g of sodium benzoate, the volatile oil and a quantity of water to a volume of 1000 ml and stir well.

Description A brownish-yellow liquid; odour, slightly aromatic; taste, sweet and slightly pungent.

Identification (1) Extract 20 ml with three 15-ml quantities of ether, keep the aqueous solution for further use, combine the extracts and evaporate to dryness. Dissolve the residue in 0.5 ml of ethyl acetate to produce a solution as the test solution. Dissolve cinnamaldehyde CRS in ethanol to produce a solution containing about 1 μl per ml as the reference solution. Carry out the method for thin layer chromatography (Appendix Ⅵ B), using silica gel G mixed with sodium carboxymethylcellulose as the coating substance and a mixture of petroleum ether (60-90℃) and ethyl acetate (17 : 3) as the mobile phase. Apply separately 10 μl of the test solution and 1-2 μl of the reference solution to the plate. After developing and removal of the plate, dry in air and spray with alcoholic dinitrophenylhydrazine TS. The spot in the chromatogram obtained with the test solution corresponds in position and colour to the spot in the chromatogram obtained with the reference solution.

(2) Extract the aqueous solution, obtained under the test for Identification (1), with two 15-ml quantities of *n*-butanol, wash the combined extracts with 10 ml of water, discard the washing and evaporate the *n*-butanol extracts to dryness. Dissolve the residue in 1 ml of methanol to produce a solution as the test solution. Dissolve paeoniflorin CRS in methanol to produce a solution containing about 2 mg per ml as the reference solution. Carry out the method for thin layer chromatography (Appendix Ⅵ B), using silica gel G mixed with sodium carboxymethylcellulose as the coating substance and a mixture of chloroform, ethyl acetate, methanol and concentrated ammonia TS (8 : 1 : 4 : 1) as the mobile phase. Apply separately 2-3 μl of each of the two solutions to the plate. After developing and removal of the plate, dry in air, spray with a 5% solution of vanillin in sulfuric acid and heat to the spots clear. The spot in the chromatogram obtained with the test solution corresponds in position and colour to the spot in the chromatogram obtained with the reference solution.

(3) To 0.5 g of Radix Glycyrrhizae reference drug add 10 ml of water, heat under reflux for 30 minutes and filter. Treat the filtrate in the same manner as for preparation of the test solution in the test for Identification (2) to produce a mixture as the reference drug solution. Carry out the method for thin layer chromatography (Appendix Ⅵ B), using silica gel G mixed with 1% solution of sodium hydroxide as the coating substance and a mixture of ethyl acetate, formic acid, glacial acetic acid and water (15 : 1 : 1 : 2) as the mobile phase. Apply separately 1-2 μl of each of the test solution obtained in the test for Identification (2) and the reference drug solution to the plate. After developing and removal of the plate, dry in air. Spray with 10% sulfuric acid in ethanol and heat at 105℃ to the spots clear. Examine under ultraviolet light at 365 nm. The fluorescent spots in the chromatogram obtained with the test solution correspond in position and colour to the spots in the chromatogram obtained with the reference drug solution.

Relative density Not less than 1.10 (Appendix Ⅶ A).

Other requirements Comply with the general requirements for mixtures (Appendix Ⅰ J).

Assay Carry out the method for high performance liquid chromatography (Appendix Ⅵ D).

Chromatographic system and system suitability Use octadecylsilane bonded silica gel as the stationary phase and a mixture of methanol and 0.3% solution of phosphoric acid (25 : 75) as the mobile phase. As detector a spectrophotometer set at 230 nm. The number of theoretical plates of the column is not less than 1500, calculated with the reference to the peak of paeoniflorin.

Reference solution Dissolve a quantity of paeoniflorin CRS, weigh accurately, in 70% ethanol to produce a solution containing 60 μg per ml.

Test solution Measure accurately 5 ml of the mixture to a 100 ml of volumetric flask, dilute with 70% ethanol to volume, mix well, centrifuge, and use the supernatant as the test solution.

Procedure Inject accurately 10 μl of the reference solution and 5-20 μl of the test solution into the column, and calculate the content.
It contains not less than 0.60 mg of paeoniflorin ($C_{23}H_{28}O_{11}$) per ml, referred to Radix Paeoniae Alba.

Action To warm and reinforce the *middle-energizer*, and relieve contracture to kill pain.

Indications Cold in the spleen and stomach in a deficiency syndrome, pain of the stomach and abdomen, alleviated by warmth and pressure, stomach discomfort and casting up of gastric acid, poor appetite; gastroduodenitis with above symptoms.

Usage and dosage 20-30 ml, 3 times a day, shaked before use.

Storage Tightly closed, protected from light.

Xiaojianzhong Keli
(小建中颗粒)

Xiaojianzhong Granules

Ingredients Radix Paeoniae Alba 400 g; Fructus Jujubae 200 g; Ramulus Cinnamomi 200 g; Radix et Rhizoma Glycyrrhizae Praeparata Cum Melle 133 g; Rhizoma Zingiberis Recens 200 g.

Procedure Distill volatile oil from Ramulus Cinnamomi and Rhizoma Zingiberis Recens, and keep the aqueous liquid of distillation for later use. Decoct the residue and the other three ingredients with water thrice, each for 1 hour, combine the decoctions and filter. Combine the filtrate with the above distillation, concentrate to a thick extract with a relative density of 1.10-1.12 (65℃), add ethanol to a content of 50%, stir thoroughly, allow to stand for 6-8 hours, filter and recover ethanol, add a quantity of a mixture of sucrose and dextrin (4 : 1), make granules, dry, sift, add the above volatile oil, mix well, and make 1000 g granules.

Description Pale brown to brownish-yellow granules; odour, aromatic; taste, sweet.

Identification (1) Dissolve 30 g of the granules in 40 ml of water, add 45 ml of ether, ultrasonicate for 30 minutes, filter, keep the water layer for latter use. Evaporate the ether layer to dryness, dissolve the residue in 0.5 ml of ethyl acetate as the test solution. Dissolve cinnamaldehyde CRS in ethanol to produce a solution containing 1 μg per ml as the reference solution. Carry out the method for thin layer chromatography (Appendix Ⅵ B), using silica gel G as the coating substance and a mixture of petroleum ether (60-90℃) and ethyl acetate (17 : 3) as the mobile phase. Apply separately 15 μl of the test solution and 2 μl of the reference solution to the plate. After developing and removing the plate, dry in air, and spray with dinitrophenylhydrazine in ethanol TS. The spot in the chromatogram obtained with the test solution corresponds in position and colour to the spot in the chromatogram obtained with the reference solution.
(2) Triturate well 15 g of the granules with 10 g of kieselguhr, add 60 ml of methanol, heat under reflux for 1 hour. Filter, concentrate the filtrate to about 2 ml, grind well with 2 g of neutral alumina oxide and dry. Apply to a column (1 cm in diameter) packed with neutral alumina oxide (100-200mesh, 1 g). Elute with 100 ml of methanol, collect the eluate and evaporate to dryness, and dissolve the residue in 1 ml of dehydrated ethanol as the test solution. To 0.5 g of Radix Paeoniae Alba reference drug, add 20 ml of methanol, carry out the procedure as described under the test solution, beginning at the words "heat under reflux for 1 hour", to produce a solution as the reference drug solution. Dissolve paeoniflorin CRS in methanol to produce a solution containing 2 mg per ml as the reference solution. Carry out the method for thin layer chromatography (Appendix Ⅵ B), using silica gel G as the coating substance and a mixture of chloroform, methanol and water (13 : 6 : 2) as the mobile phase. Apply separately 3 μl of each of the test solution, the reference drug solution, and the reference solution to the plate. After developing and removing the plate, dry in air, spray with 5% solution of vanillin in sulfuric acid, and heat to the spots clear. The spots in the chromatogram obtained with the test solution correspond in position and colour to the spots in the chromatogram obtained with the reference solution and the reference drug solution.
(3) To the water layer extracted with ether, obtained under the Identification (1), extract with two 20-ml quantities of n-butanol saturated with water. Combine the n-butanol extracts, wash with 10 ml of water saturated with n-butanol, separate the n-butanol layer and evaporate to dryness, and dissolve the residue in 1 ml of methanol as the test solution. To 0.5 g of Radix et Rhizoma Glycyrrhizae reference drug, add 10 ml of water, heat under reflux for 30 minutes, filter, prepare a solution with the filtrate in the same manner as the reference drug solution. Carry out the method for thin layer chromatography (Appendix Ⅵ B), using silica gel G as the coating substance and a mixture of ethyl acetate, formic acid, glacial acetic acid and water (15 : 1 : 1 : 2) as the mobile phase. Apply separately 1-2 μl of each of the test solution and the reference drug solution to the plate. After developing and removing the plate, dry in air. Spray with 1% solution of sulfuric acid in ethanol, heat at 105℃ to the spots clear, examine under ultraviolet light at 365 nm. The fluorescent spots in the chromatography obtained with the test solutions correspond in position and colour to the spots in the chromatography obtained with the reference drug solution.

Other requirements Comply to the general requirements for medicine granules (Appendix Ⅰ C).

Assay Carry out the method for high performance liquid chromatography (Appendix Ⅵ D).

Chromatography system and system suitability Use octadecylsilane bonded silica gel as the stationary phase and a mixture of acetonitrile and water (17 : 83) as the mobile phase. As detector a spectrophotometer set at 230 nm. The number of theoretical plates of the column is not less than 2000, calculated with the reference to the peak of paeoniflorin.

Reference solution Weigh accurately a quantity of paeoniflorin CRS, dissolve in dilute ethanol to produce a reference solution containing 40 μg per ml.

Test solution Pulverize the granules, obtained under the test of packing variation, to fine powder, weigh accurately about 0.25 g in a stoppered conical flask, add accurately 25 ml of dilute ethanol, stopper and weigh. Ultrasonicate (power, 300 W; frequency, 50 kHz) for 30 minutes, cool, weigh again, and replenish the lost weight with dilute ethanol. Mix well, allow to stand, filter the supernatant, use the successive filtrate as the test solution.

Procedure Inject accurately 10 μl of the reference solution and 15 μl of the test solution into the column, respectively, and calculate the content.
It contains not less than 25.0 mg of paeoniflorin ($C_{23}H_{28}O_{11}$) per pack, referred to Radix Paeoniae Alba.

Action To Warm and reinforce the *middle-energizer*, relieve contracture to kill pain.

Indications Cold in the spleen and stomach in a deficiency syndrome, pain of the stomach and abdomen, alleviated by warmth and pressure, stomach discomfort and casting up of gastric acid, poor appetite, palpitation; chronic colitis with alternative diarrhea and constipation, and gastroduodenitis with above symptoms.

Usage and dosage 15 g, 3 times a day.

Precaution Contraindicated for patients who have got an exterior syndrome which has not been cured yet, or patients with *damp-heat* in the spleen or with enteric hemorrhage.

Strength 15 g per pack

Storage Preserve in tightly closed containers.

Xiaojin Wan
(小金丸)

Xiaojin Pills

Ingredients Moschus 30 g; Semen Momordicae (removed from shell and oil) 150 g; Radix Aconiti Kusnezoffii Praeparata 150 g; Resina Liquidambaris 150 g; Olibanum (processed) 75 g; Myrrha (processed) 75 g; Faeces Trogopterori (stir-baked with vinegar) 150 g; Radix Angelicae Sinensis (stir-baked with wine) 75 g; Pheretima 150 g; Chinese Ink Cake 12 g.

Procedure Pulverize the above ingredients, except Moschus, to fine powder. Triturate Moschus with the above powder and sift. To each 100 g of the powder add 25 g of starch, mix well to make pills with the dilute paste prepared from 5 g of starch, and dry at a lower temperature.

Description Blackish-brown pasted pills; odour, aromatic, taste, slightly bitter.

Identification (1) Microscopical: Stone cells rectangular or subsquare, with slightly thickened walls. Cells of cotyledon rectangular or polygonal, containing aleurone grains and pieces of fatty oils. Parenchymatous cells fusiform, walls slightly thickened and with very fine oblique crisscross striations. Muscle fibres layered, colourless, or pale brown, sinuous, sometimes crisscross-arranged vertically.
(2) Triturate 5 g of the pills to fine powder, add 20 ml of ether, ultrasonicate for 20 minutes, filter and evaporate the filtrate to dryness. Dissolve the residue in 1 ml of ethanol to produce a solution as the test solution. Prepare a solution of 1 g of Radix Angelicae Sinensis reference drug as the reference drug solution in the same manner. Carry out the method for thin layer chromatography (Appendix Ⅵ B), using silica gel G mixed with sodium carboxymethylcellulose as the coating substance and a mixture of *n*-hexane and ethyl acetate (9 : 1) as the mobile phase. Apply separately 5 μl of each of the two solutions to the plate. After developing and removal of the plate, dry in air and examine under ultraviolet light at 365 nm. The fluorescent spots in the chromatogram obtained with the test solution correspond in position and colour to the spots in the chromatogram obtained with the reference drug solution.

Limit test for aconitine Pulverize a quantity of the pills to fine powder, weigh 10 g of the powder to a conical flask, add 10 ml of ammonia TS, stir well, allow to stand for 2 hours add 120 ml of dehydrated ether, shake for 1 hour, allow to stand for 24 hour, filter. Extract the filtrate with 20, 15 and 15 ml of quantities of a mixture of hydrochloric acid and water (4 : 100), combine the acid solution, adjust pH 9-10 with concentrated ammonia TS, extract with two 20-ml quantities of dehydrated ether, combine the ether extracts recover the ether, and dissolve the residue in 1 ml of dehydrated ethanol as the test solution. Dissolve aconitine CRS in dehydrated ethanol to produce a solution containing 1 mg per ml as the reference solution. Carry out the method for thin layer chromatography (Appendix Ⅵ B), using silica gel G mixed with sodium carboxymethyl cellulose as the coating substance and a mixture of benzene, ethyl acetate and diethylamine (7 : 2 : 0.5) as the mobile phase. Apply separately 15 μl of the test solution and 5 μl of the reference solution to the plate. After developing in the chamber pre-equilibriated for 2 hours and removal of the plate, dry in air, spray with diluted solution of potassium heptaiodobismuthate TS. The spots in the chromatogram obtained with the test solution are smaller or no in position and colour than the spots in chromatogram obtained with the reference solution.

Other requirements Comply with the general requirements for pills (Appendix Ⅰ A), except the disintegration test.

Action To dissipate nodulation to reduce swelling and resolve stagnant blood to kill pain.

Indications Scrofula, goiter, breast carcinoma and mammary nodules due to retention of *phlegm* with manifestations of one or several dermal or subcutaneous movable lumps when touched, or enlarged bones or joints with normal colour of the skin and hard painful swellings.

Usage and dosage 1.2-3 g, twice a day, taken after crushed; appropriate reduction of the dosage for children.

Precaution Contraindicated for pregnant women.

Strength (1) 3 g per 100 pills (2) 6 g per 100 pills (3) 6 g per 10 pills

Storage Tightly closed.

Xiaokeling Pian
(消渴灵片)

Xiaokeling Tablets

Ingredients Radix Rehmanniae 200 g; Fructus Schisandrae Chinensis 15 g; Radix Ophiopogonis 100 g; Cortex Moutan 15 g; Radix Astragali 100 g; Rhizoma Coptidis 10 g; Poria 17 g; Radix et Rhizoma Ginseng Rubra 10 g; Radix Trichosanthis 100 g; Gypsum Fibrosum 50 g; Fructus Lycii 100 g.

Procedure Pulverize Poria, Radix Trichosanthis, Gypsum Fibrosum, Radix and Rhizoma Ginseng Rubra, Rhizoma Coptidis and Cortex Moutan to fine powder. Decoct Radix Rehmanniae and other four ingredients with water twice, 3 hours for the first time, 2 hours for the second time, combine the decoctions, allow to stand for 12 hours, concentrate the supernatant in vacuum to a thin extract with a relative density of 1.36-1.38 (80℃), mix with the above powder, dry, pulverize to fine powder, mix well, make granules, dry and compress into 960 tablets.

Description Brown tablets; taste, bitter and sweet.

Identification (1) Microscopical: Irregular branched masses colourless, dissolved in chloral hydrate TS; hyphae colourless or pale brown, 4-6 μm in diameter. Stone cells yellowish-green, rectangular, elliptical, subsquare, polygonal or fusiform, 27-72 μm in diameter, walls relatively thickened, with fine and dense pit-canals. Woody fibre bright yellow, with slightly thickened walls and distinct pits. Irregular plate crystals colourless, with straight striations. Fragments of resin canals often visible, containing yellow

masses of secretion.
(2) Pulverize 5 tablets to the fine powder, add 10 ml of methanol, ultrasonicate for 15 minutes, filter and evaporate the filtrate to dryness, dissolve the residue in 2 ml of methanol to produce a solution as the test solution. Prepare a solution of 50 mg of Rhizoma Coptidis reference drug as the reference drug solution in the same manner. Dissolve berberine hydrochloride CRS in methanol to produce a solution containing 0.5 mg per ml as the reference solution. Carry out the method for thin layer chromatography (Appendix Ⅵ B), using silica gel G as the coating substance and a mixture of benzene, ethyl acetate, methanol, isopropanol and concentrated ammonia TS (12 : 6 : 3 : 3 : 1) as the mobile phase. Apply separately 1 μl of each of the three solutions to the plate. After developing in a chamber pre-equilibrated with ammonia vapour for 15 minutes and removal of the plate, dry in air and examine under ultraviolet light at 365 nm. The fluroscent spots in the chromatogram obtained with the test solution correspond in position and colour to the spots in the chromatogram obtained with the reference drug solution and the reference solution.

Other requirements Comply with the general requirements for tablets (Appendix Ⅰ D).

Action To replenish *qi* and nourish *yin*, clear *heat* and purge *fire*, and encourage production of body fluids to extinguish thirst.

Indications Diabetes due to a deficiency of *qi* and *yin* with manifestations of polydipsia, polyphagia, polyuria, emaciation, shortness of breath and lassitude; diabetes type Ⅱ and diabetes of the moderate type with above symptoms.

Usage and dosage 8 tablets, 3 times a day.

Precaution It is forbidden to prescribe to pregnant women, and avoid pungent and spicy foods.

Strength 0.36 g per tablet

Storage preserve in tightly closed containers.

Xiaomi shuan
消糜栓
Xiaomi Suppositories

Ingredients Ginsenosides 25 g; Radix Arnebiae 500 g; Cortex Phellodendri Chinensis 500 g; Radix Sophorae Flavescentis 500 g; Anhydrous Alumen 400 g. Borneolum Syntheticum 200 g; Catechu 500 g.

Procedure Pulverize Catechu and Anhydrous Alumen to fine powder, and Pulverize Borneolum Syntheticum to fine powder. Decoct Cortex Phellodendri Chinensis, Radix Sophorae Flavescentis and Radix Arnebiae with water for 3 times, 2 hours for the first time and 1 hour for the second and third times respectively. Combine the decoctions, filter, concentrate to form a thin extract with a relative density of 1.10 (80℃), add ethanol to a content of 75% ethanol, stand for 24 hours. Filter, recover the ethanol and concentrate to form a thick, extract with a relative density of 1.36 (80℃). Dry, pulverize to fine powder, mix with above powders and Ginsenosides powder. Heat a quantity of polyoxyethylene stearate and 22 g of glycerin to melt, mix at the temperature of 40℃ ± 2℃ with above power, pour into moulds, allow to cool and make 1000 suppositories.

Description Brown to dark brown suppositories; odour, characteristic.

Identification (1) Place 1 suppository in a stopper conical flask, heat to melt on a water bath at 90℃. Remove the flask, add 50 ml of ethyl acetate while hot, shake well and allow to cool. Stand for 20 minutes below 0℃, filter, Use the first filtrate as the test solution. Dissolve a quantity of a mixture of (±)-borneol and (±)-isoborneol CRS in ethyl acetate to prepare a solution containing 5 mg per ml as the reference solution. Carry out the method for thin layer chromatography (Appendix Ⅵ B), using silica gel G as the coating substance and a mixture of cyclohexene and ethyl acetate (17 : 3) as the mobile phase. Apply separately 2 μl of each of the above two solutions to the plate. After developing and removal of the plate, dry in air. Spray with 5% vanillin in sulfuric, and heat at 105℃ to the spots clear. The spots in the chromatogram obtained with the test solution correspond in position and colour to the spots in the chromatogram obtained with the reference solution.
(2) Macerate 0.2 g of the catechu reference drug in 10 ml of methanol for 20 minutes, filter, use the filtrate as the reference drug solution. Carry out the method for thin layer chromatography (Appendix Ⅵ B), using silica gel G as the coating substance and a mixture of chloroform, methanol and formic acid (20 : 5 : 2) as the mobile phase. Apply separately 2 μl of the test solution of Identification (1) and 2 μl of the above reference drug solution to the plate. After developing and removal of the plate, dry in air. Spray with 5% vanillin in sulfuric, and heat at 105℃ to the spots clear. The spots in the chromatogram obtained with the test solution correspond in position and colour to the spots in the chromatogram obtained with the reference solution.

Other requirements Complies with the general requirements for suppositories (Appendix Ⅰ W).

Assay Carry out the method for high performance liquid chromatography (Appendix Ⅵ D)

Chromatographic system and system suitability Use octadecylsilane bonded silica gel G as the stationary phase and a mixture of acetonitrile and 0.05% solution of phosphoric acid (20 : 80) as the mobile phase. As detector a spectrophotometer set at 203 nm, maintain the column temperature at 40℃. The number of the theoretical plates of the column is not less than 2500, calculated with the reference to the peak of ginsenoside Re.

Reference solution Dissolve a quantity of ginsenoside Re CRS, accurately weighed, in methanol to prepare a solution containing 0.25 mg per ml.

Test solution Cut the suppositories, obtained under the test of weight variation, into pieces. Weight accurately 0.6 g of the above pieces, in a stopper conical flask. Add accurately 100 ml of *n*-butanol saturated with water and weigh. Heat under reflux for 1 hour, allow to cool. Weigh again and replenish the lost weight with above solution, mix well and filter. Measure accurately 50 ml of the successive filtrate in a separator funnel, wash with two 50-ml quantities of ammonia TS saturated with *n*-butanol and wash successive with 50 ml of water saturated with *n*-butanol. Evaporate the *n*-butanol extract to dryness, dissolve the residue in an appropriate amount of methanol, and transfer to a 10 ml volumetric flask. Dilute with the methanol to volume, mix well, stand for 15 minutes below 0℃, remove the volumetric flask, filter immediately. Use the successive filtrate, allow to cool, as the test solution.

Procedure Inject accurately 20 μl of each of the reference solution and the test solution into the column, and calculate the content.
It contains no less than 2.4 mg of ginsenoside Re ($C_{48}H_{82}O_{18}$) per Suppository.

Action To clear *heat* and relieve *toxicity*, remove *dampness* and kill fungi, eliminate necrotic tissues and regenerate

tissues.

Indications Leukorrheal disease due to pouring of *damp-heat* with manifestations of leukorrhagia, yellow in colour and thick in quality with fishy smell, and pruritus valvae; trichomonal vaginitis, colpomycosis, nonspecific vaginitis and erosion of cervix with above symptoms.

Usage and dosage Vaginal use. 1 suppository, once a day.

Precaution Contraindicated for the period of pregnancy.

Strength 3 g per Suppository

Storage Preserve in well closed containers below 30℃.

Xiaoqinglong Heji (小青龙合剂)

Xiaoqinglong Mixture

Ingredients Herba Ephedrae 125 g; Ramulus Cinnamomi 125 g; Radix Paeoniae Alba 125 g; Rhizoma Zingiberis 125 g; Radix et Rhizoma Asari 62 g; Radix Et Rhizoma Glycyrrhizae Praeparata Cum Melle 125 g; Rhizoma Pinelliae Preparatum 188 g; Fructus Schisandrae Chinensis 125 g.

Procedure Distil volatile oil from Radix et Rhizoma Asari and Ramulus Cinnamomi and collect the aqueous solution in another container after distillation. Decoct the residue of the above two drugs, Radix Paeoniae Alba, Herba Ephedrae, Fructus Schisandrae Chinensis and Radix Et Rhizoma Glycyrrhizae Praeparata Cum Melle with water for 2 times, 2 hours for the first time and 1.5 hours for the second time. Combine the decoctions and filter. Combine the filtrate with the above aqueous solution and concentrate to about 1000 ml. Carry out the method for percolation as directed under Liquid Extracts and Extracts (Appendix Ⅰ O), macerate Rhizoma Pinelliae Preparatum and Rhizoma Zingiberis for 24 hours and percolate, using 70% ethanol as solvent. Concentrate the percolate, combine with the above concentrated decoction, allow to stand and filter. Concentrate the filtrate to 1000 ml, add 3 g of sodium benzoate and mix well with the above volatile oil.

Description A brownish-black liquid; odour, slightly aromatic; taste, sweet and slightly pungent.

Identification (1) Alkalify 10 ml by adding several drops of concentrated ammonia TS, extract with two 15-ml quantities of chloroform and evaporate the combined extracts to dryness. Dissolve the residue in 1 ml of methanol to produce a solution as the test solution. Dissolve ephedrine hydrochloride CRS in methanol to produce a solution containing about 1 mg per ml as the reference solution. Carry out the method for thin layer chromatography (Appendix Ⅵ B), using silica gel G mixed with sodium carboxymethylcellulose as the coating substance and a mixture of *n*-butanol, glacial acetic acid and water (8 : 2 : 1) as the mobile phase. Apply separately 5 μl of each of the two solutions to the plate. After developing and removal of the plate, dry in air, spray with ninhydrin TS and heat at 105℃ to the spots clear. The spot in the chromatogram obtained with the test solution corresponds in position and colour to the spot in the chromatogram obtained with the reference solution.

(2) Extract 10 ml with two 10-ml quantities of ether. Discard the ether solutions, extract the aqueous solution with two 15-ml quantities of *n*-butanol, wash the combined extracts with 20 ml of water. Discard the washing and evaporate the *n*-butanol extract to dryness. Dissolve the residue in 1 ml of methanol to produce a slution as the test solution. Dissolve paeoniflorin CRS in methanol to produce a solution containing about 2 mg per ml as the reference solution. Carry out the method for thin layer chromatography (Appendix Ⅵ B), using silica gel G mixed with sodium carboxymethylcellulose as the coating substance and a mixture of chloroform, ethyl acetate, methanol and concentrated ammonia TS (8 : 1 : 4 : 1)as the mobile phase. Apply separately 2-3 μl of each of the two solutions to the plate. After developing and removal of the plate, dry in air. Spray with a 5% solution of vanillin in sulfuric acid and heat to the spots clear. The spot in the chromatogram obtained with the test solution correspond in position and colour to the spots in the chromatogram obtained with the reference solution.

(3) To 0.5 g of Radix Et Rhizoma Glycyrrhizae reference drug add 10 ml of water, heat under reflux for 30 minutes and filter. Treat the filtrate in the same manner as for preparation of test solution in the test for Identification (2) to prepare a solution as the reference drug solution. Dissolve ammonium glycyrrhizate CRS in methanol to produce a solution containing about 2 mg per ml as the reference solution. Carry out the method for thin layer chromatography (Appendix Ⅵ B), using silica gel G mixed with a 1% solution of sodium hydroxide as the coating substances and a mixture of ethyl acetate, glacial acetic acid, formic acid and water (15 : 1 : 1 : 2) as the mobile phase. Apply separately 1 μl of each of the test solution obtained in the test for Identification (2), the reference drug solution and the reference solution to the plate. After developing and removal of the plate, dry it in air. Spray with a 10% solution of sulfuric acid in ethanol, heat at 105℃ to the spots clear and examine under the ultraviolet light at 365 nm. The fluorescent spots in the chromatogram obtained with the test solution correspond in position and colour to the spots in the chromatogram obtained with the reference drug solution and the reference solution.

Other requirements Comply with the general requirements for mixtures (Appendix Ⅰ J).

Assay Carry out the method for high performance liquid chromatography (Appendix Ⅵ D).

Chromatographic system and system suitability Use octadecylsilane bonded silica gel as the stationary phase and a mixture of isopropanol, methanol, acetic acid and water (2 : 25 : 2 : 71) as the mobile phase. As detector a spectrophotometer set at 230 nm. The number of theoretical plates of the column is not less than 4000, calculated with the reference to the peak of paeoniflorin.

Reference solution Disslove a quantity of paeoniflorin CRS, weigh accurately, in methanol to produce a solution containing 50 μg per ml.

Test solution Measure accurately 3 ml of the mixture to a 25 ml of volumetric flask, dilute with methanol to volume, mix well, and filter.

Procedure Inject accurately 10 μl of the reference solution and 5-20 μl of the test solution into the column, and calculate the content. It contains not less than 0.30 mg of paeoniflorin ($C_{23}H_{28}O_{11}$) per ml, referred to Radix Paeoniae Alba.

Action To release the exterior and resolve retained fluid, and relieve cough and asthma.

Indications Aversion to cold, fever, adiaphoresis, asthma or shortness of breath and coughing with expectoration of thin phlegm due to *wind-cold* and retention of fluid.

Usage and dosage 10-20 ml, 3 times a day, shake before use.

Strength (1) 10 ml per phial (2) 100 ml per bottler (3) 120 ml per bottle

Storage Preserve in tightly closed containers, protected from light.

Xiaoqinglong Keli
(小青龙颗粒)

Xiaoqinglong Granules

Ingredients Herba Ephedrae 154 g; Ramulus Cinnamomi 154 g; Radix Paeoniae Alba 154 g; Rhizoma zingiberis 154 g; Radix et Rhizoma Asari; 77 g; Radix Et Rhizoma Glycyrrhizae Preparata Cum Melle 154 g; Rhizoma Pinelliae Preparatum 231 g; Fructus Schisandrae Chinensis 154 g.

Procedure Distil volatile oil from Radix et Rhizoma Asari and Ramulus Cinnamomi, collect the aqueous solution in another container. Decoct the drug residue and Radix Paeoniae Alba, Herba Ephedrae, Fructus Schisandrae Chinensis and Radix Et Rhizoma Glycyrrhizae Preparata Cum Melle with water for 2 times, 2 hours for the first time and 1.5 hours for the second time. combine the decoctions and filter. Combine the filtrate with the above aqueous solution and concentrate to about 1000 ml. Pulverize Rhizoma Pinelliae Preparatum and Rhizoma zingiberis to course powder, carry out the method for percolation as directed under Liquid Extracts and Extracts (Appendix Ⅰ O), using 70% ethanol as the solvent, macerate for 24 hours and percolate. Recover the ethanol from the percolate, combine with the above decoction, allow to stand and filter. Concentrate the filtrate to produce a thin extract with a relative density of 1.08-1.10 (55-60℃), spray with heating to dry, mix with a quantity of lactose, add the above volatile oil by spraying, mix well and make 461.5 g of granules (without sucrose); or concentrate the filtrate to produce thick extract with a relative density of 1.35-1.38 (80℃), add a quantity of powder of sucrose, mix well, make granules and dry. Spray the above volatile oil, mix well and make 1000 g of granules.

Description Pale brown to brown granules; odour, slightly aromatic; taste, sweet and slightly pungent.

Identification (1) Triturate 13 g of granules or 6 g (without sucrose) to fine powder, add 30 ml of dehydrated ethanol, ultrasonicate for 30 minutes and filter. Concentrate the filtrate to about 1 ml, mix with a quantity of neutral aluminium oxide and dry it on a water bath. Apply the mixture to a column (1.5 cm in internal diameter) packed with neutral aluminium oxide (200-300-mesh, 10 g), elute with 70 ml of ethanol, collect the eluate and evaporate to dryness. Dissolve the residue in 2 ml of ethanol to produce a solution as the test solution. Dissolve ephedrine hydrochloride CRS in ethanol to produce a solution containing about 0.4 mg per ml as the reference solution. Carry out the method for thin layer chromatography (Appendix Ⅵ B), using silica gel G mixed with a 2% solution of sodium hydroxide as the coating substance and a mixture of cyclohexane, chloroform and ethanol (1 : 3 : 1) as the mobile phase. Apply separately 5 μl each of the two solutions to the plate. After developing and removal of the plate, dry in air. Spray with ninhydrin TS and heat at 105℃ to the spots clear. The spot in the chromatogram obtained with the test solution corresponds in position and colour to the spot in the chromatogram obtained with the reference solution.

(2) Dissolve paeoniflorin CRS in ethanol to produce a solution containing about 2 mg per ml as the reference solution. Carry out the method for thin layer chromatography (Appendix Ⅵ B), using silica gel G as the coating substance and a mixture of chloroform, ethyl acetate, methanol and formic acid (40 : 5 : 10 : 0.2) as the mobile phase. Apply separately 5 μl each of the reference solution and the test solution obtained in the test for Identification (1) to the plate. After developing and removal of the plate, dry in air. Spray with a 5% solution of vanillin in sulfuric acid and heat to the spots clear. The spot in the chromatogram obtained with the test solution corresponds in position and colour to the spot in the chromatogram obtained with the reference solution.

(3) Triturate 10 g of the granules or 5 g (without sucrose) to fine powder, add 30 ml of methanol, ultrasonicate for 30 minutes, filter, evaporate the filtrate to dryness, dissolve the residue in 20 ml of water. Extract with *n*-butanol saturated with water for 2 times, 20 ml for each time, combine the *n*-butanol extracts, evaporate to dryness, and dissolve the residue in 2 ml of methanol as the test solution. To 0.5 g of Radix et Rhizome Glycyrrhizae reference drug, add 20 ml of water, heat under reflux for 30 minutes, filter, extract with *n*-butanol saturated with water to produce a solution in the same manner as the reference drug solution. Carry out the method for thin layer chromatography (Appendix Ⅵ B), using silica gel G mixed with 1% solution of sodium of hydroxide as the coating substance and the mixture of ethyl acetate, formic acid, glacial acetic acid and water (15 : 1 : 1 : 2) as the mobile phase. Apply separately 10-20 μl of the test solution and 10 μl the reference drug solution to the plate. After developing and removal of the plate, dry in air, spray with 10% solution of sulphuric acid in ethanol, and heat at 105℃ to the spots clear. The spots in the chromatogram obtained with the test solution correspond in position and colour to the spot in the chromatogram obtained with the reference drug solution.

Other requirements Comply with the general requirements for granules (Appendix Ⅰ C).

Assay Carry out the method for high performance liquid chromatography (Appendix Ⅵ D).

Chromatographic system and system suitability Use octadecylsilane bonded silica gel as the stationary phase and a mixture of isopropanol, methanol, acetic acid and water (2 : 25 : 2 : 71) as the mobile phase. As detector a spectrophotometer set at 230 nm. The number of theoretical plates of the column is not less than 4000, calculated with the reference to the peak of paeoniflorin.

Reference solution Dissolve a quantity of paeoniflorin CRS, weigh accurately, in 70% ethanol to produce a solution containing 50 μg per ml.

Test solution Pulverize the granules obtained under the test of packing variation to fine powder, weigh accurately 1.1 g or 0.5 g (without sucrose) of the powder to a 25 ml of volumetric flask, add a quantity of methanol, ultrasonicate for 30 minutes, allow to cool, dilute with methanol to the volume mix well, and filter.

Procedure Inject accurately 10 μl of the reference solution and 5-20 μl of the test solution into the column, and calculate the content. It contains not less than 9.0 mg of paeoniflorin ($C_{23}H_{28}O_{11}$) per pack, referred to Radix Paeoniae Alba.

Action To release the exterior to resolve retained fluid, and relieve coughing, asthma or difficulty in breathing.

Indications Aversion to cold, fever, adiaphoresis, asthma or difficulty in breathing and coughing with expectoration of thin phlegm due to *wind-cold* and retention of fluid.

Usage and dosage 1 pack, 3 times a day, taken after

dissolved in boiling water.

Strength (1) 6 g per pack (without sucrose)
(2) 13 g per pack

Storage preserve in tightly closed containers.

Xiaoshi Tuire Tangjiang (消食退热糖浆)

Xiaoshi Tuire Syrup

Ingredients Radix Bupleuri, Radix Scutellariae, Rhizoma Anemarrhenae, Herba Artemisiae Annuae, Semen Arecae, Cortex Magnoliae Officinalis, Pulvis Cornus Bubali Concentratus, Cortex Moutan, Spica Schizonepetae, Radix et Rhizoma Rhei.

Procedure Heat Cortex Magnoliae Officinalis, Cortex Moutan and Spica Schizonepetae under a reflux condenser with 60% ethanol twice, 1.5 hours for each time. Combine the extracts, filter and keep the filtrate for further use. Decoct Pulvis Cornus Bubali Concentratus sacked in a cloth bag and other six ingredients with water twice, 2 hours for each time. Combine the decoctions, concentrate to a quantity, mix with the above filtrate, allow to stand and filter. Recover ethanol from the filtrate and concentrate to a quantity. Add a quantity of simple syrup and sodium benzoate, add water to make 1000 ml, stir well and pack.

Description A brown clear liquid; taste, sweet, slightly bitter.

Identification Shake 25 ml of the syrup with 15 ml of ether, separate the ether solution and evaporate to 2 ml as the test solution. Prepare separately two solutions of 1.5 g each of Herba Artemisiae Annuae and Radix et Rhizoma Rhei reference drug, add 15 ml of ether, macerate for overnight, filter and evaporate the filtrates to about 2 ml as the reference drug solutions. Carry out the method for thin layer chromatography (Appendix Ⅵ B), using silica gel G mixed with sodium caboxymethylcellulose as the coating substance and a mixture of benzene, ethyl acetate, methanol, formic acid and water (60 : 20 : 4 : 1 : 10) as the mobile phase. Apply separately 10 μl each of the three solutions to the plate. After developing and removal of the plate, dry in air and examine under ultraviolet light at 365 nm. The bright blue and yellow fluorescent spots in the chromatogram obtained with the test solution correspond in position and colour to the spots in the chromatogram obtained with the reference drug solutions. Examine in day light, The yellow spots turn to red on exposure the plate to ammonia vapour.

Relative density 1.10-1.23 (Appendix Ⅶ A).

pH value 4.0-6.0 (Appendix Ⅶ G).

Other requirements Comply with the general requirements for syrups (Appendix Ⅰ H).

Assay Carry out the method for high performance liquid chromatography (Appendix Ⅵ D).

Chromatographic system and system suitability Use octadecylsilane bonded silica gel as the stationary phase and a mixture of methanol, water and glacial acetic acid (40 : 60 : 1) as the mobile phase. As detector a spectrophotometer set at 280 nm. The number of theoretical plates of the column is not less than 9000, calculated with the reference to the peak of baicalin.

Reference solution Dissolve a quantity of paeoniflorin CRS, weigh accurately, in dilute ethanol to produce a solution containing 25 μg per ml.

Test solution Measure accurately 5 ml of the syrup to a 100 ml of volumetric flask, add a quantity of dilute ethanol, mix well, dilute with dilute to volume, and mix well. Measure 15 ml of the solution to another 100 ml of volumetric flask, dilute with dilute ethanol to volume, mix well, filter, and use the successive filtrate as the test solution.

Procedure Inject accurately 10 μl of each of the reference solution and the test solution into the column, and calculate the content.

It contains not less than 1.7 mg of baicalin ($C_{21}H_{18}O_{11}$) per ml, referred to Radix Scutellariae.

Action To clear *heat-toxicity*, and promote digestion to relax bowels.

Indications Child common cold due to affliction from exogenous seasonal pathogenic factors accompanied with retained undigested food, with manifestations of persistent high fever, fullness in the stomach and abdomen, and difficult bowel movements; upper repiratory tract infection and acute entergastritis with above symptoms.

Usage and dosage 5 ml for children under 1 year old, 10 ml for 1-3 years old, 15 ml for 4-6 years old, 20 ml for 7-10 years old, 25 ml for over 10 years old; 2-3 times a day.

Precaution Contraindicated for patients with diarrhea due to deficiency in spleen.

Strength (1) 60 ml per bottle (2) 100 ml per bottle
(3) 120 ml per bottle

Storage Preserve in tightly closed containers, stored in a cool place.

Xiaoshuan Tongluo Jiaonang (消栓通络胶囊)

Xiaoshuan Tongluo capsules

Ingredients Rhizoma Chuanxiong 287 g Radix et Rhizoma Salviae Miltiorrhizae 215 g Radix Astragali 431 g Rhizoma Alismatis 144 g Radix et Rhizoma Notoginseng 144 g Flos Sophorae 72 g Ramulus Cinnamomi 144 g Radix Curcumae 144 g Radix Aucklandiae 72 g Borneolum Syntheticum 5.7 g Fructus Crataegi 144 g.

Procedure Pulverize separately Borneolum Syntheticum and Radix et Rhizoma Notoginseng to fine powders. Decoct the other nine ingredients with water for three times, combine the decoctions and filter. Concentrate the filtrate in vacuum to a thick extract with a relative density of 1.17-1.19 (80℃). Add the powder of et Rhizoma, dry, pulverize, make granules, dry, add the powder of Borneolum, Syntheticum, mix well and make to 1000 capsules.

Description Hard capsules containing brownish-yellow to brown granules and powder. Odour, aromatic; taste, slightly bitter.

Identification (1) Heat under reflux 3 g of the content powder in 30 ml of 2% solution of potassium hydroxide in methanol for 1 hour, cool, filter, evaporate the filtrate to dryness, dissolve the residue in 15 ml of water, extract with three 20-ml quantities of n-butanol saturated with water. Combine the n-butanol extracts, wash with 30 ml of 1% sodium hydroxide solution, then wash with two 30-ml of water saturated with n-butanol, evaporate the n-butanol extracts to dryness. Dissolve the residue in 1 ml of methanol as the test solution. Dissolve astragaloside Ⅳ CRS in methanol to prepare a solution containing 1 mg per ml as the reference solution. Carry out the method for thin layer

chromatography (Appendix Ⅵ B), using silica gel G as the coating substance and the lower layer of the mixture of chloroform, methanol and water (13 : 7 : 2) as the mobile phase. Apply separately to the plate 2-5 μl of the test solutions and 5 μl of the reference solutions. After developing and removal of the plate, dry in air. Spray with a 10% solution of sulfuric acid in ethanol and heat at 105℃ to the spots clear. The spots in the chromatogram obtained with the test solution correspond in position and colour to the spots in the chromatogram obtained with the reference solution.

(2) To 1.5 g of the content powder, add 40 ml of water, ultrasonicate for 30 minutes, centrifuge, adjust the pH to 2-3 with dilute hydrochloric acid TS, extract with two 20-ml quantities of ethyl acetate, combine the ethyl acetate extracts, evaporate to dryness, dissolve the residue in 1 ml of ethyl acetate as the test solution. Prepare a solution of 1 g of Rhizoma Chuanxiong reference drug add 20 ml of water, in the same manner as the reference drug solution. Dissolve ferulic acid CRS in methanol to prepare a solution containing 0.5 mg per ml as the reference solution. Carry out the method for thin layer chromatography (Appendix Ⅵ B), using silica gel G as the coating substance and the mixture of toluene, ethyl acetate and formic acid (20 : 10 : 1) as the mobile phase. Apply separately to the plate 2-5 μl of the test solutions and 5 μl of the reference solutions. After developing and removal of the plate, dry in air. Spray with a mixture of 1% solution of potassium ferricyanide and 1% solution of ferric chloride (1 : 1), freshly prepared. The spots in the chromatogram obtained with the test solution correspond in position and colour to the spots in the chromatogram obtained with the reference drug solution and the reference solution.

(3) To 1.5 g of the content powder, add 5 ml of ethyl acetate, macerate for 20 minutes, shake constantly, filter, use the filtrate as the test solution. Dissolve Borneolum Syntheticum CRS in absolute ethanol to prepare a solution containing 1 mg per ml as the reference solution. Carry out the method for thin layer chromatography (Appendix Ⅵ B), using silica gel G as the coating substance and the mixture of petroleum ether (60-90℃), toluene and ethyl acetate (9 : 1 : 1) as the mobile phase. Apply separately to the plate 2-5 μl of the test solutions and 5 μl of the reference solutions. After developing and removal of the plate, dry in air. Spray with 5% solution of vanillin in sulfuric and heat at 105℃ to the spots clear. The spots in the chromatogram obtained with the test solution correspond in position and colour to the spots in the chromatogram obtained with the reference solution.

Other requirements Comply with the general requirements for capsules (Appendix Ⅰ L).

Assay Carry out the method for high performance liquid chromatography (Appendix Ⅵ D).

Chromatographic system and system suitability Use octadecylsilane bonded silica gel as the stationary phase and a mixture of acetonitrile and 0.05% phosphoric acid solution (21 : 79) as the mobile phase. As detector a spectrophotometer set at 203 nm. The number of theoretical plates of the column is not less than 5000, calculated with reference to the peak of ginsenoside Rg_1.

Reference solution Dissolve a quantity of ginsenoside Rg_1 CRS, accurately weighed, in methanol to prepare a solution containing 0.5 mg per ml as the reference solution.

Test solution Weigh accurately 2 g of the the content powder, obtained in test of weight variation, and pulverize to fine powder. To a stopper conical flask, add accurately 50 ml of methanol, weight, heat under reflux for 2 hours, cool and weight again. Compensate the loss of the weight with methanol, mix well, and filter, Measure accurately 25 ml of the successive filtrate, and evaporate to dryness. Dissolve the residue in 30 ml of water, extract with two 20-ml quantities of ether, discard the ether extract, extract with four 20-ml quantities of n-butanol saturated with water, combine the n-butanol extracts, wash with two 30-ml quantities of ammonia TS, and wash with two 20-ml quantities of the water saturated with n-butanol. Recover n-butanol to dryness, dissolve the residue with methanol in a 10 ml volumetric flask, dilute with methanol to volume, mix well, filter, use the filtrate as the test solution.

Procedure Inject accurately 5 μl of the reference solution and 5-10 μl of the test solution into the column and measure. It contains not less than 2.0 mg of ginsenoside Rg_1 ($C_{42}H_{72}O_{14}$) per capsule, referred to Radix et Rhizoma Notoginseng.

Action To promote blood circulation to resolve stagnated blood, and warm meridians to dredge them.

Indications Stroke due to blockage of meridians by blood stasis with manifestations of hyponoia, dysphasia, cold hands and feet, and painful limbs; ischemic stroke and hyperlipemia with above symptoms.

Usage and dosage 6 capsules, 3 times a day; or follow doctor's advice.

Precaution Avoid raw, cold, pungent, spicy and animal fatty foods.

Strength 0.37 g per capsule

Storage Preserved in tightly closed containers.

Xiaoshuan Tongluo Pian (消栓通络片)

Xiaoshuan Tongluo Tablets

Ingredients Rhizoma Chuanxiong 287 g; Radix et Rhizoma Salviae Miltiorrhizae 215 g; Radix Astragali 431 g; Rhizoma Alismatis 144 g; Radix et Rhizoma Notoginseng 144 g; Flos Sophorae 72 g; Ramulus Cinnamomi 144 g; Radix Curcumae 144 g; Radix Aucklandiae 72 g; Borneolum Syntheticum 5.7 g; Fructus Crataegi 144 g.

Procedure Pulverize separately Borneolum Syntheticum and Radix et Rhizoma Notoginseng to fine powders. Decoct the other nine ingredients with water for three times, combine the decoctions and filter. Concentrate the filtrate in vacuum to a thin extract with a relative density of 1.35-1.40 (80℃). Add the powder of Radix et Rhizoma Notoginseng, dry, make granules, dry, add the powder of Borneolum Syntheticum, mix thoroughly, compress into 1000 tablets and coat with sugar or film.

Description Sugar or film coated tablets with brown core. Odour, aromatic; taste, slightly bitter.

Identification (1) Triturate a quantity of the tablets, removed the coats to fine powder and sublimate 2 g of the powder. Add 2-3 drops of a 5% solution of vanillin in sulfuric acid to the sublimate. A purplish-red colour is produced.

(2) Triturate 4 tablets with coating removed to fine powder, shake with 10 ml of ehter and filter. Discard the filtrate, moisten the drug residue with water, shake with 10 ml of *n*-butanol saturated with water for 10 minutes and macerate for 2 hours. Seperate the supernatant, extract the drug residue further with 10 ml of *n*-butanol saturated with water again and separate the supernatant. Combine the supernatants, add three quantities of water saturated with *n*-butanol and

shake well, separate the *n*-butanol layer and evaporate to dryness. Dissolve the residue in 1 ml of methanol to produce a solution as the test solution. Dissolve ginsenoside Rb_1, ginsenoside Rg_1 and notoginsenoside R_1 CRS in methanol to produce a mixture containing 2.5 mg of each per ml as the reference solution. Carry out the method for thin layer chromatography (Appendix Ⅵ B), using silica gel G as the coating substance and the upper layer of a mixture of *n*-butanol, ethyl acetate and water (4 : 1 : 5) as the mobile phase. Apply separately 5 μl of the test solution and 10 μl of the reference solution to the plate. After developing and removal of the plate, dry in air, spray with 10% solution of sulfuric acid in ethanol and heat to the spots clear. The spots in the chromatogram obtained with the test solution correspond in position and colour to the spots in the chromatogram obtained with the reference solution.

(3) Triturate 8 tablets with coating removed to fine powder, add 30 ml of methanol, ultrasonicate for 30 minutes, allow to cool, filter, evaporate the filtrate to dryness, and dissolve the residue in 20 ml of water. Extract with *n*-butanol saturated with water by shaking for twice, 30 ml for the first time and 20 ml for the second time, combine the *n*-butanol extracts, wash with 20-ml quantities of 1% solution of sodium hydroxide, then wash with 15-ml quantities of water saturated with *n*-butanol, evaporate the *n*-butanol extracts to dryness, and dissolve the residue in 2 ml of methanol as the test solution. Dissolve astragaloside Ⅳ CRS in methanol to produce a solution containing 0.5 mg per ml as the reference solution. Carry out the method for thin layer chromatography (Appendix Ⅵ B), using silica gel G as the coating substance and the lower layer of a mixture of chloroform, ethyl acetate, methanol and water (15 : 40 : 22 : 10) stored at lower than 10℃ as the mobile phase. Apply separately 5 μl of each of the test solution and the reference solution to the plate. After developing and removal of the plate, dry in air, spray with 10% solution of sulphuric acid in ethanol, and heat at 105℃ to the spots clear. The spots in the chromatogram obtained with the test solution correspond in position and colour to the spot in the chromatogram obtained with the reference solution.

(4) Triturate 10 tablets with coating removed to fine powder, add 30 ml of methanol, ultrasonicates for 20 minutes, allow to cool, filter, evaporate the filtrate to dryness, and dissolve the residue in 25 ml of water, extract with 30 ml of *n*-butanol saturated with water, evaporate the *n*-butanol extracts to dryness, and dissolve the residue in 2 ml of methanol as the test solution. Dissolve rutin CRS in methanol to produce a solution containing 4 mg per ml as the reference solution. Carry out the method for thin layer chromatography (Appendix Ⅵ B), using silica gel G mixed with sodium carboxymethylcellulose containing 4% solution of sodium acetate as the coating substance and the mixture of ethyl acetate, formic acid and water (8 : 1 : 1) as the mobile phase. Apply separately 2 μl of each of the test solution and the reference solution to the plate. After developing and removal of the plate, dry in air, spray with aluminium trichloride TS, allow to stand for 20 minutes, and examine in daylight. The spots in the chromatogram obtained with the test solution correspond in position and colour to the spots in the chromatogram obtained with the reference solution.

Other requirements Comply with the general requirements for tablets (Appendix Ⅰ D).

Assay Carry out the method for high performance liquid chromatography (Appendix Ⅵ D).

Chromatographic system and system suitability Use octadecylsilane bonded silica gel as the stationary phase and a mixture of acetonitrile and 0.05% solution of phosphoric acid (20 : 80) as the mobile phase. As detector a spectrophotometer set at 203 nm. The number of theoretical plates of the column is not less than 2000, calculated with the reference to the peak of ginsenoside Rg_1.

Reference solution Dissolve a quantity of ginsenoside Rg_1 CRS, weigh accurately, in methanol to prepare a solution containing 0.2 mg per ml.

Test solution To 20 tablets with coating removed, weigh accurately, triturate to fine powder, weigh accurately 0.2 g of the powder to a conical flask with stopper, weigh accurately, add accurately 50 ml of methanol, weigh, heat under reflux for 3 hours, allow to cool, weigh again, replenish the lost weight, mix well, and filter. Measure accurately 25 ml of the successive filtrate, evaporate to dryness, dissolve the residue in 20 ml of water for several times to a separator, extract with 30, 30, 20 and 20 ml quantities of *n*-butanol saturated with water by shaking, combine the *n*-butanol extracts. wash with 1% solution of sodium hydroxide for twice, 25 ml for each time, and then wash with two 25-ml quantities of water saturated with *n*-butanol, evaporate the *n*-butanol extracts to dryness, dissolve the residue in methanol to a 25 ml of volumetric flask, dilute with methanol to volume, mix well, filter, and use the successive filtrate as the test solution.

Procedure Inject accurately 10 μl of the reference solution and 5-20 μl of the test solution into the column. and calculate the content.

It contains not less than 1.8 mg of ginsenoside Rg_1 ($C_{42}H_{72}O_{14}$) per tablet, referred to Radix et Rhizoma Notoginseng.

Action To promote blood circulation to resolve stagnated blood, and warm meridians to dredge them.

Indications Stroke due to blockage of meridians by blood stasis with manifestations of hyponoia, dysphasia, cold hands and feet, and painful limbs; ischemic stroke and hyperlipemia with above symptoms.

Usage and dosage 6 tablets, 3 times a day.

Precaution Avoid raw, cold, pungent, spicy and animal fatty foods.

Strength 0.38 g per tablet with film

Storage Preserve in tightly closed containers.

Xiaoyao Wan (Damiwan) (逍遥丸，大蜜丸)

Xiaoyao Pills (Big Honeyed Pills)

Ingredients Radix Bupleuri 100 g; Radix Angelicae Sinensis 100 g; Radix Paeoniae Alba 100 g; Rhizoma Atractylodis Macrocephalae (stir-baked) 100 g; Poria 100 g; Radix Et Rhizoma Glycyrrhizae Praeparata Cum Melle 80 g; Herba Menthae 20 g.

Procedure Pulverize the above seven ingredients to fine powder, sift, mix well. To each 100 g of the powder add 135-145 g of refined honey to make big honeyed pills.

Description Dark brown big honeyed pills; taste, sweet.

Identification (1) Microscopical: Irregularly branched masses colourless, dissolved in chloral hydrate TS; hyphae colourless or pale brown, 4-6 μm in diameter. Clusters of calcium oxalate occurring in parenchymatous cells, 18-32 μm in diameter, usually in rows, or several clusters in one cells. Needle crystals of calcium oxalate fine, 10-32 μm in length, irregularly filling in parenchymatous cells. Fibre bundles surrounded by parenchymatous cells containing prisms of calcium oxalate, forming crystal fibres. Vittae

containing yellow or brownish-yellow secretion 8-25 μm in diameter.

(2) Cut 2 g of the pills into pieces, add 15 ml of ethanol, allow to stand for 1 hour while shaking frequently, filter and evaporate the filtrate to dryness. Dissolve the residue in 1 ml of acetone to produce a solution as the test solution. Prepare a solution of 0.1 g of Radix Angelicae Sinensis reference drug and 10 ml of ethanol as the reference drug solution in the same manner. Carry out the method for thin layer chromatography (Appendix Ⅵ B), using silica gel G as the coating substance and a mixture of *n*-hexane and ethyl acetate (9 : 1) as the mobile phase. Apply separately 5 μl each of the two solutions to the plate. After developing and removal of the plate, dry in air and examine under ultraviolet light at 365 nm. The fluorescent spots in the chromatogram obtained with the test solution correspond in position and colour to the spots in the chromatogram obtained with the reference drug solution.

(3) Triturate well 18 g of the pills, cut into pieces, with 10 g of kieselguhr, add 60 ml of ethanol, ultrasonicate for 30 minutes, filter and evaporate the filtrate to dryness. Dissolve the residue in 30 ml of water, extract with two 10-ml quantities of ether, discard the ether solutions, extract the aqueous solution with three 30-ml quantities of *n*-butanol saturated with water, wash the combined *n*-butanol solutions with three 20-ml quantities of water saturated with *n*-butanol. Discard the washings and evaporate the *n*-butanol solution to dryness. Dissolve the residue in 1 ml of methanol to produce a solution as the test solution. Prepare a solution of 1 g of Radix et Rhizoma Glycyrrhizae reference drug and 20 ml of ethanol in the same manner as the reference drug solution. Carry out the method for thin layer chromatography (Appendix Ⅵ B), using silica gel G as the coating substance mixed with a 1% solution of sodium hydroxide and a mixture of ethyl acetate, formic acid, glacial acetic acid and water (15 : 1 : 1 : 2) as the mobile phase. Apply separately 3 μl of each of the two solutions to the plate. After developing and removal of the plate, dry in air, spray with a 10% solution of sulfuric acid in ethanol, heat at 105℃ to the spots clear and examine under ultraviolet light at 365 nm. The fluorescent spots in the chromatogram obtained with the test solution correspond in position and colour to the spots in the chromatogram obtained with the reference drug solution.

(4) Mix the test solution obtained in the test for Identification (3) with a small quantity of neutral aluminium oxide, dry on a water bath, apply to a column (1 cm in internal diameter) packed with neutral aluminium oxide (200 mesh, 2 g), elute with 40 ml of a mixture of ethyl acetate and methanol (1 : 1), collect the eluate and evaporate to dryness. Dissolve the residue in 1 ml of ethanol to produce a solution as the test solution. Dissolve paeoniflorin CRS in ethanol to produce a solution containing 2 mg per ml as the reference solution. Carry out the method for thin layer chromatography (Appendix Ⅵ B), using silica gel G as the coating substance and a mixture of chloroform, ethyl acetate, methanol and formic acid (40 : 5 : 10 : 0.2) as the mobile phase. Apply separately 15 μl of the test solution and 3 μl of the reference solution to the plate. After developing and removal of the plate, dry in air, spray with a 5% solution of vanillin in sulfuric acid and heat to the spots clear. The spot in the chromatogram obtained with the test solution corresponds in position and colour to the spot in the chromatogram obtained with the reference solution.

Other requirements Comply with the general requirements for pills (Appendix Ⅰ A).

Assay Carry out the method for high performance liquid chromatography (Appendix Ⅵ D).

Chromatographic system and system suitability Use octadecylsilane bonded silica gel as the stationary phase and a mixture of acetonitrile and 1% solution of phosphoric acid (15 : 85) as the mobile phase. As detector a spectrophotometer set at 230 nm. The number of theoretical plates of the column is not less than 2000, calculated with the reference to the peak of paeoniflorin.

Reference solution Dissolve a quantity of paeoniflorin CRS, weigh accurately, in dilute ethanol to produce a solution containing 50 μg per ml.

Test solution To the pills obtained under the test of weight variation, cut into pieces, mix well, weigh accurately 1 g of the powder to a stopper conical flask, add accurately 25 ml of dilute ethanol, stopper tightly, weigh, Ultrasonicate (power, 250 W; frequency, 33 kHz) for 30 minutes, cool to ambient temperature and weigh again. Replenish the lost weight with dilute ethanol TS, mix well, filter and use the successive filtrate.

Procedure Inject accurately 10 μl of each of the reference solution and the test solution into the column and calculate the content.

It contains not less than 6.3 mg of paeoniflorin ($C_{23}H_{28}O_{11}$) per pill, refered to Radix Paeoniae Alba.

Action To soothe the liver and invigorate the spleen, and nourish blood to regulate menstruation.

Indications Depression and discomfort, distending pain in the chest and hypochondria, dizziness, poor appetite and menstrual disorders due to stagnation of *liver-qi* and deficiency in the spleen.

Usage and dosage 1 pill, twice a day.

Strength 9 g per pill

Storage Preserve in tightly closed containers.

Xiaoyao Wan (Shuiwan)
(逍遥丸，水丸)

Xiaoyao Pills (watered pills)

Ingredients Radix Bupleuri 100 g; Radix Angelicae Sinensis 100 g; Radix Paeoniae Alba 100 g; Rhizoma Atractylodis Macrocephalae (stir-baked) 100 g; Poria 100 g; Radix et Rhizoma Glycyrrhizae Praeparata Cum Melle 80 g; Herba Menthae 20 g.

Procedure Pulverize the above seven ingredients to fine powder, sift and mix thoroughly. Decoct 100 g of Rhizoma Zingiberis Recens with water for twice, 20 minutes for each time, filter, make pills with the filtrate and dry.

Description Yellowish-brown to brown watered pills; taste, sweet.

Identification (1) Microscopical: Irregularly branched masses colourless, dissolved in chloral hydrate solution; hyphae colourless or pale brown, 4-6 μm in diameter. Clusters of calcium oxalate occurring in parenchymatous cells, usually in rows, or several clusters in one cell. Needle crystals of calcium oxalate fine, irregularly filling in parenchymatous cells. Fibre bundles surrounded by parenchymatous cells containing prisms of calcium oxalate, forming crystal fibres. Vittae containing yellow or brownish-yellow secretion, 8-25 μm in diameter.

(2) Grind 1 g of the pills, add 15 ml of ethanol, ultrasonicate for 15 minutes, filter and evaporate the filtrate to dryness. Dissolve the residue in 1 ml of ethanol and use the solution as the test solution. Prepare a solution with 0.1

g of Radix Angelicae Sinensis reference drug in the same manner as the reference drug solution. Carry out the method for thin layer chromatography (Appendix Ⅵ B), using silica gel G as the coating substance and a mixture of *n*-hexane and ethyl acetate (9 : 1) as the mobile phase. Apply separately 5 μl each of the two solutions to the plate. After developing and removal of the plate, dry in air and examine under ultraviolet light at 365 nm. The fluorescent spots in the chromatogram obtained with the test solution correspond in position and colour to the spots in the chromatogram obtained with the reference drug solution.

(3) Grind 12 g of the pills to fine powder, add 40 ml of ethanol, ultrasonicate for 30 minutes, filter and evaporate the filtrate to dryness. Dissolve the residue in 20 ml of water and extract with three 20-ml quantities of *n*-butanol saturated with water. Wash the combined *n*-butanol solutions with three 15-ml quantities of water saturated with *n*-butanol. Discard the washings, evaporate the combined *n*-butanol extracts to dryness and dissolve the residue in 0.5 ml of methanol to produce a solution as the test solution. To 1 g of Radix et Rhizoma Glycyrrhizae reference drug add 20 ml of ethanol and prepare a solution in the same manner as the reference drug solution. Carry out the method for thin layer chromatography (Appendix Ⅵ B), using silica gel G as the coating substance prepared with a 10% solution of sodium hydroxide and a mixture of ethyl acetate, formic acid, glacial acetic acid and water (15 : 1 : 1 : 2) as the mobile phase. Apply separately to the plate 3 μl of each of the two solutions. After developing and removal of the plate, dry in air, spray with a 10% solution of sulfuric acid in ethanol, heat at 105℃ to the spots clear and examine under ultraviolet light at 365 nm. The fluorescent spots in the chromatogram obtained with the test solution correspond in position and colour to the spots in the chromatogram obtained with the reference drug solution.

(4) Mix the test solution remained in the test for Identification (3) with 2 g of neutral aluminium oxide and dry on a water bath. Apply to a column packed with neutral aluminium oxide (200 mesh, 2 g, 8-10 mm in internal diameter), elute with 50 ml of methanol and evaporate the eluate to dryness. Dissolve the residue in 1 ml of ethanol to produce a solution as the test solution. Dissolve paeoniflorin CRS in ethanol to produce a solution containing 2 mg per ml as the reference solution. Carry out the method for thin layer chromatography (Appendix Ⅵ B), using silica gel G as the coating substance and a mixture of chloroform, ethyl acetate, methanol and formic acid (40 : 5 : 10 : 0.2) as the mobile phase. Apply separately to the plate 15 μl of the test solution and 3 μl of the reference solution. After developing and removal of the plate, dry in air, spray with a 5% solution of vanillin in sulfuric acid and heat to the spots clear. The spot in the chromatogram obtained with the test solution corresponds in position and colour to the spot in the chromatogram obtained with the reference solution.

Other requirements Comply with the general requirements for pills (Appendix Ⅰ A).

Assay Carry out the method for high performance liquid chromatography (Appendix Ⅵ D).

Chromatographic system and system suitability Use octadecylsilane bonded silica gel as the stationary phase and a mixture of acetonitrile and 1% solution of phosphoric acid (15 : 85) as the mobile phase. As detector a spectrophotometer set at 230 nm. The number of theoretical plates of the column is not less than 2000, calculated with the reference to the peak of paeoniflorin.

Reference solution Dissolve a quantities of paeoniflorin CRS, weigh accurately, in dilute ethanol TS to produce a solution containing 50 μg per ml.

Test solution To 0.4 g of the powdered pills, weighed accurately, add accurately 25 ml of dilute ethanol TS in a conical flask with stopper, stopper tightly and weigh. Ultrasonicate for 30 minutes, cool to ambient temperature and weigh again, replenish the lost weight with dilute ethanol TS, mix well, filter and use the successive filtrate.

Procedure Inject Accurately 10 μl of each of the reference solution and the test solution, respectively, into the column and determine.

It contains not less than 2.5 mg of paeoniflorin ($C_{23}H_{28}O_{11}$) per gram, refered to Radix Paeoniae Alba.

Action To soothe the liver and invigorate the spleen, and nourish blood to regulate menstruation.

Indications Depression and discomfort, distending pain in the chest and hypochondria, dizziness, poor appetite and menstrual disorders due to stagnation of *liver-qi* and deficiency in the spleen.

Usage and dosage 6-9 g, 1-2 times a day.

Storage Preserve in well closed containers, protected from moisture.

Xiaoying Wan (消癭丸)

Xiaoying Pills

Ingredients Thallus Eckloniae seu Laminariae 300 g; Sargassum 200 g; Concha Meretricis seu Cyclinae 50 g; Bulbus Fritillariae Thunbergii 50 g; Radix Platycodonis 100 g; Spica Prunellae 50 g; Pericarpium Citri Reticulatae 100 g; Semen Arecae 100 g.

Procedure Pulverize the above eight ingredients to fine powder, sift and mix thoroughly. To each 100 g of the powder add 110-130 g of refined honey to make big honeyed pills.

Description Brown big honeyed pills; taste, salty and astringent.

Identification (1) Triturate well 12 g of the pills, cut into pieces, with 8 g of kieselguhr, add 50 ml of chloroform and 7.5 ml of concentrated ammonia TS, ultrasonicate for 30 minutes and filter. Shake the filtrate with 10 ml of dilute hydrochloric acid TS and 20 ml of water. Separate the acidic layer, adjust pH to 8-9 with ammonia TS, extract with two 10-ml quanties of chloroform and evaporate the combined extracts to dryness. Dissolve the residue in 0.5 ml of methanol to produce a solution as the test solution. To 1 g of Semen Arecae reference drug, add 20 ml of chloroform and 3 ml of concentrated ammonia TS, and prepare the reference drug solution in the same manner. Carry out the method for thin layer chromatography (Appendix Ⅵ B), using silica gel G mixed with a 1% solution of sodium hydroxide as the coating substance and a mixture of benzene, chloroform and methanol (10 : 4 : 1) as the mobile phase. Apply separately to the plate 10 μl of each of the two solutions. After developing and removal of the plate, dry in air and spray with potassium indobismuthate TS. The spots in the chromatogram obtained with the test solution correspond in position and colour to the spots in the chromatogram obtained with the reference drug solution.

(2) Triturate 12 g of the pills, cut into pieces, with 8 g of kieselguhr, add 100 ml of methanol, ultrasonicate for 30 minutes, filter and evaporate the filtrate to dryness. Dissolve the residue in 3 ml of ethanol and use the supernatant as the test solution. Prepare a solution of 1 g of

Pericarpium Citri Reticulatae reference drug and 20 ml of methanol in the same manner as the reference drug solution. Dissolve a quantity of hesperidin CRS in methanol to produce a saturated solution as the reference solution. Carry out the method for thin layer chromatography (Appendix Ⅵ B), using silica gel G mixed with a 0.5% solution of sodium hydroxide as the coating substance. Apply separately to the plate 2-4 μl of the test solution, 2 μl of each of the reference drug solution and reference solution. Develop about 3 cm, using a mixture of ethyl acetate, methanol and water (100 : 17 : 13) as the mobile phase, remove and dry it in air. Develop about 8 cm again, using the upper layer of toluene, ethyl acetate, formic acid and water (20 : 10 : 1 : 1) as the mobile phase, remove and dry in air, spray with a 1% solution of aluminium chloride in ethanol and examine under ultraviolet light at 365 nm. The fluorescent spots in the chromatogram obtained with the test solution correspond in position and colour to the spots in the chromatogram obtained with the reference drug solution. The fluorescent spot in the chromatogram obtained with the test solution corresponds in position and colour to the spot in the chromatogram obtained with the reference solution.

Other requirements Comply with the general requirements for pills (Appendix Ⅰ A).

Action To dissipate nodulation and goiter.

Indications Goiter at its initial stage due to accumulation of *phlegm-fire*; simple endemic goiter with above symptoms.

Usage and dosage 1 pill, 3 times a day, taken before meals; appropriate reduction of the dosage for children.

Strength 3 g per pill

Storage Preserve in tightly closed containers.

Xiaoyin Pian
(消银片)

Xiaoyin Tablets

Ingredients Radix Rehmanniae; Cortex Moutan; Radix Paeoniae Rubra; Radix Angelicae Sinensis; Radix Sophorae Flavescentis; Flos Lonicerae Japonica; Radix Scrophulariae; Fructus Arctii; Periostracum Cicadae; Cortex Dictamni; Radix Saposhnikoviae; Folium Isatidis and Flos Carthami.

Procedure Pulverize Flos Lonicerae Japonica and Flos Carthami to fine powder. Macerate the other eleven ingredients, cut into lumps or pieces, with a quantitie of 70% ethanol for 12 hours and filter. Heat under reflux the drug residue with a quantity of 70% ethanol for 12 hours and filter. Combine the filtrate, recover ethanol and concentrate to a thick extract. Stir thoroughly with the fine powder, a quantity of starch and magnesium stearate and dry. Pulverize, make granules, dry, make to 1000 tablets and coat with sugar.

Description Sugar coated tablets with deep brown core; taste, bitter.

Identification (1) Triturate 10 tablets with coating removed to fine powder, heat under reflux for 20 minutes with 20 ml of chloroform, stand to cool, filter and concentrate the filtrate to 1 ml as the test solution. Dissolve separately indirubin CRS and matrine CRS in chloroform to produce two solutions containing 1 mg of each per ml as the reference solutions. Carry out the method for thin layer chromatography (Appendix Ⅵ B), using silica gel G as the coating substances and benzene, acetone and methanol (16 : 6 : 1) as the mobile phase, saturated with ammonia vapour. Apply separately to the plate 10-20 μl of the test solution and 5 μl of the reference solutions. After developing and removal of the plate, dry in air. The spot due to indirubin in the chromatogram obtained with the test solution corresponds in position and colour to the spot obtained with indirubin reference solution. Spray with modified potassium iodobismuthate TS. The spot due to matrine in the chromatogram obtained with the test solution corresponds in position and colour to the spot in the chromatogram obtained with matrine reference solution.

(2) Triturate 10 tablets with coating removed to fine powder, add 20 ml of ethanol, and ultrasonicate for 30 minutes, filter, evaporate the filtrate to dryness, dissolve the residue in 15 ml of water and filter. Extract the filtrate with two 15-ml quantities of ether, and discard the ether solution. Extract the aqueous layer with three 15-ml quantities of *n*-butanol saturated with water, combine the *n*-butanol extracts and evaporate to dryness. Dissolve the residue in 1 ml of ethanol as the test solution. Dissolve paeoniflorin CRS in ethanol to produce a solution containing 1 mg per ml as the reference solution. Carry out the method for thin layer chromatography (Appendix Ⅵ B), using silica gel G as the coating substance and a mixture of chloroform, ethyl acetate, methanol and formic acid (40 : 5 : 10 : 0.2) as the mobile phase. Apply separately to the plate 5-10 μl of each of the two solutions. After developing and removal of the plate, dry in air. Spray with a 5% solution of vanillin in sulfuric acid and heat to visualize the spots clearly. The spot in the chromatogram obtained with the test solution corresponds in position and colour to the spot obtained with the reference solution.

(3) Triturate 10 tablets with coating removed to fine powder, add 10 ml of ether, stopper, shake thoroughly, and stand overnight. Filter, expel solvent, and dissolve the residue with 1 ml of ethyl acetate as the test solution. Dissolve paeonol CRS in ethyl acetate to produce a solution containing 2 mg per ml as the reference solution. Carry out the method for thin layer chromatography (Appendix Ⅵ B), using silica gel G as the coating substance and toluene as the mobile phase. Apply separately in strip 10-20 μl of the test solution and 10 μl of the reference solution to the plate. After developing and removal of the plate, dry in air, spray with 5% solution of ferric chloride in ethanol, heat to spots distinct. The strip in the chromatogram obtained with the test solution corresponds in position and colour to the strip in the chromatogram obtained with the reference solution.

(4) Macerate 1 g of Cortex Dictamni reference drug with 10 ml of ether overnight, filter, evaporate the filtrate, and dissolve the residue with 1 ml of ethyl acetate as the reference drug solution. Carry out the method for thin layer chromatography (Appendix Ⅵ B), using silica gel G as the coating substance and a mixture of toluene and acetone (20 : 1) as the mobile phase. Apply separately in strip 10-20 μl of the test solution obtained under Identification (1) and the above reference drug solution to the plate. After developing and removal of the plate, dry in air, and examine under ultraviolet light at 365 nm. The fluorescent spots in the chromatogram obtained with the test solution correspond in position and colour to the spots in the chromatogram obtained with the reference drug solution.

Other requirements Comply with the general requirements for tablets (Appendix Ⅰ D).

Assay Carry out the method for high performance liquid chromatography (Appendix Ⅵ D).

Chromatographic system and system suitability Use octadecylsilane bonded silica gel as the stationary phase and a mixture of acetonitrile and 0.1% solution of phosphoric acid (adjust pH to 8.0 with triethylamine) (20 : 80) as the

mobile phase. As detector a spectrophotometer set at 220 nm. The number of theoretical plates of the column is not less than 4000, calculated with the reference to the peak of matrine.

Reference solution Dissolve a quantity of matrine CRS, weigh accurately, with the mobile phase to produce a solution containing 0.2 mg of matrine per ml

Test solution Pulverize 30 tablets, removed coats and weigh accurately, to fine powder, weigh accurately 3.5 g in a stoppered conical flask, add 1 ml of concentrated ammonia TS and 30 ml of chloroform, stopper, shake thoroughly and stand overnight. Filter, wash the flask and residue with 15 ml of chloroform separately in 3 times. Combine the filtrate and washing, evaporate to dryness. Dissolve the residue with the mobile phase. transfer to a 25 ml volumetric flask, dilute to volume, and mix well. Filter and use the filtrate as the test solution.

Procedure Inject accurately 10 μl of the reference solution and the test solution into the column, determine and calculate.
It contains not less than 0.30 mg of matrine ($C_{15}H_{24}N_2O$) per tablet, referred to Radix Sophorae Flavescentis.

Action To clear *heat* to cool blood, nourish blood to moisten the skin, and expel *wind* to stop itching.

Indications Psoriasis due to *blood-heat* with *wind-dryness* and deficiency in blood with *wind-dryness* with manifestations of punctate eruptions with bright red fundus covered with silvery scales, or those with light red fundus covered with thicker silver scales, relatively dry in quality with severer itching.

Usage and dosage 5-7 tablets, 3 times a day; one month making a course of treatment.

Strengh Equivalent to 0.6 g of crude drug per tablet

Storage Preserve in tightly closed containers.

Xiatianwu Pian
(夏天无片)

Xiatianwu Tablets

Xiatianwu Tablets are the sugar costed tablets prepared from Rhizoma Corydalis Decumbentis.

Procedure Pulverize 250 g of Rhizome Corydalis Decumbentis to fine powder for latter use. Pulverize 350 g of Rhizome Corydalis Decumbentis to coarse powder, carry out the method for percolation described under Liquid Extract and Extract (Appendix I O), using a 1% solution of hydrochloric acid as solvent, macerate for 48 hours, percolate until the alkaloid reaction for percolated solution becomes negative, adjust pH of the solution to neutral with a 10% solution of sodium hydroxide, concentrate the solution to a thick extract, add the pulverized fine powder of Rhizoma Corydalis Decumbentis and a quantity of excipient, mix well, and compress into 1000 tablets and coat with sugar.

Description Sugar coated tablets with brownish yellow to dark brown core; taste, bitter.

Identification Pulverize 4 tablets with coating removed to fine powder, add 20 ml of a mixture of chloroform, methanol and concentrated ammonia TS (50 : 10 : 1), ultrasonicate for 30 minutes and filter. Evaporate the filtrate to dryness, dissolve the residue in 2 ml of methanol as the test solution. Dissolve protopine CRS in chloroform to produce a solution containing 2 mg per ml as the reference solution. Carry out the method for thin layer chromatography (Appendix VI B), using silica gel G containing sodium carboxymethylcellulose as the coating substance and cyclohexane, ethyl acetate and diethylamine (16 : 3 : 1) as the mobile phase. Apply separately to the plate 5 μl of each of the two solutions, and pre-saturate the plate for 15 minutes. After developing and removal of the plate, dry it in air. Spray with dilute potassium iodobismuthate TS. The spot in the chromatogram obtained with the test solution in the position and colour corresponds to the spot in the chromatogram obtained with the reference solution.

Other requirements Comply with requirements for tablets (Appendix I D).

Assay Carry out the method for high performance liquid chromatography (Appendix VI D).

Chromatographic system and system suitability Use octadecylsilane bonded silica gel as the stationary phase and a mixture of acetonitrile and a buffer solution (to 1000 ml of water add 30 ml of glacial acetic acid and 8 ml of triethylamine) (18 : 82) as the mobile phase. As detector a spectrophotometer set at 289 nm. The number of theoretical plates of the column is not less than 3000, calculated with the reference to the peak of protopine.

Reference solution Weigh accurately 10 mg of protopine CRS in a 50 ml volumetric flask, add 5 ml of 1% solution of hydrochloric acid, dilute with 50% methanol to volume, and mix well. Measure accurately 5 ml in a 25 ml volumetric flask, dilute with 50% methanol to volume, and mix well (containing 40 μg of protopine per ml).

Test solution Pulverize 10 tablets, with coating removed and weigh accurately, to fine powder, weigh accurately 0.6 g in a stoppered conical flask, add accurately 50 ml of 50% methanol, and weigh. Heat under reflux for 30 minutes, stand to cool, weigh again, replenish the lost weight with dilute ethanol, and mix well. Filter, and use the filtrate as the test solution.

Procedure Inject accurately 10-20 μl of the reference solution and the test solution into the column, determine and calculate the content.
It contains not less than 0.90 mg of protopine ($C_{20}H_{19}O_5$) per tablet, referred to Rhizoma Corydalis Decumbentis.

Action To promote blood circulation to dredge meridians, and move *qi* to kill pain.

Indications Stroke due to blockage of meridians by stagnated blood and impeded flow of *qi* with manifestations of hemiplegia, hemianesthesia; traumatic injuries, painful or swollen and numb limbs due to stagnation of *qi* and blood; rheumatic arthritis and sciatica with above symptoms.

Usage and dosage 4-6 tablets, 3 times a day.

Precaution Be cautious about pregnant women.

Storage Preserve in tightly closed containers.

Xiguashuang Runhou Pian
(西瓜霜润喉片)

Xiguashuang Runhou Buccal Tablets

Ingredients Mirabilitum Praeparatum; Borneolum syntheticum; Oleum Menthae Dementholatum; Mentholum.

Procedure Pulverize Mirabilitum Praeparatum to fine powder, add a quantity of sucrose powder and dextrin, dissolve a quantity of citric acid and carmine in water, mix

thoroughly with the above powder, make granules, dry, add Oleum Menthae Dementholatum, Mentholum and a quantity of orange essence, mix thoroughly, close tightly, compress into tablets.

Description Pale red tablets; odour, aromatic; taste, sweet, pungent and cool.

Identification Dissolve a mixture of (±)-borneol and (±)-isoborneol CRS and menthol CRS in dehydrated ethanol to produce a mixture solutions containing 0.6 mg of menthol CRS and 0.3 mg of a mixture of (±)-borneol and (±)-isoborneol CRS per ml as the reference solutions. Carry out the method as described under assay, measure 1μl of each of the above reference solutions and the test solution obtained under the assay of Borneolum syntheticum. The retention time of thepeak in the chromatogram obtained with the test solution correspond with that in the chromatogram obtained with the reference solution.

Other requirements Comply with the general requirements for tablets (Appendix Ⅰ D), except disintegration test.

Assay ***Mirabilitum praeparatum*** Triturate 60 tablets, weighed accurately, to fine powder, mix thoroughly, weigh accurately about 18 g, add 150 ml of water, shake for 10 minutes, centrifuge, filter, wash the residue with 50 ml of water in 3 portions, centrifuge, filter, combine the filtrate, add 1 ml of hydrochloric acid, boil, stir constantly and add gently a hot barium chloride TS to precipitate completely, heat on a water bath for 30 minutes, allow to stand for 1 hour, filter with an ashless filter paper or a Gusser crucible, previously weighed, wash the residue with water in several portions until the washings not present any reaction of chloride, dry, ignite to constant weight, weigh accurately, multiply by 0.6086 and calculate.
It contains not less than 11.5 mg and not more than 13.5 mg (0.6 g per tablet.), or not less than 23.0 mg and not more than 27.0 mg (1.2 g per tablet.) of sodium sulfate (Na_2SO_4) per tablet, referred to Pericarpium Citrullus Vulgaris.

Borneolum syntheticum Carry out the method for gas chromatography (Appendix Ⅵ E).

Chromatographic system and systemin suitability Use a capillary column of modified polyethyleneglycol (PEG)-20 M (30 m long, 0.53 mm in internal diameter, 1.2 μm film), maintain the column temperature at 135℃. The number of theoretical plates of the column is not less than 8000, calculated with reference to the peak of (±)-Borneol.

Correction factor Dissolve a quantity of methyl salicylate, accurately weighed, in dehydrated ethanol to produce a solution containing 0.2 mg per ml as internal standard solution. Dissolve 15 mg of (±)-borneol CRS, accurately weighed, in a 100 ml volumetric flask and dilute with the internal standard solution to volume, and mix well. Inject accurately 1 μl of the solution into the column, and calculate the correction factor.

Procedure Pulverize the tablets obtained under the test of weight variation, to fine powder weigh accurately 1.5 g in a stoppered conical flask, add accurately 5 ml of the internal standard solution, mix thoroughly, and weigh. Ultrasonicate (power, not less than 250 W; frequency, not less than 50 kHz) for 20 minutes, stand to cool, weigh again, replenish the lost weight with dehydrated ethanol, mix thoroughly, and centrifuge. Inject 1 μl of the supernatant into the column and determine.
It contains not less than 0.18 mg (0.6 g per tablet), or not less than 0.36 mg (1.2 g per tablet) of (±)-borneol ($C_{10}H_{18}O$) per tablet, referred to Borneolum syntheticum.

Action To restore normal sound and ease the throat, and reduce swelling and pain.

Indications Swollen painful throat, hoarseness, or inflammation of the throat, or retropharyngeal abscess, or tonsillitis, or aphthous stomatitis, sores on the mouth and tongue, or gingival abscess; acute and chronic pharyngolaryngitis, acute tonsillitis, stomatocace, stomatitis and swollen painful gums.

Usage and dosage For buccal use, 2-4 tablets (0.6 g per tablet) or 1-2 tablets (1.2 g per tablet) one hour.

Strength (1) 0.6 g per tablet (2) 1.2 g per tablet

Storage Preserve in tightly closed containers, protected from light.

Xingren Zhike Tangjiang (杏仁止咳糖浆)

Xingren Zhike Syrup

Ingredients Aqua Armeniacae Amara 40 ml; Extractum Stemonae Liquidum 20 ml; Extractum Polygalae Liquidum 22.5 ml; Extractum Citri Reticulatae Liquidum 15 ml; Extractum Platycodi Liquidum 20 ml; Extractum Glycyrrhizae Liquidum 15 ml.

Procedure Dissolve 244 g of sucrose in water by heating, allow to cool, add a quantity of sodium benzoate, and add successively Extractum Polygalae Liquidum, Extractum Platycodi Liquidum, Extractum Glycyrrhizae Liquidum, Extractum Stemonae Liquidum, Extractum Citri Reticulatae Liquidum and Aqua Armeniacae Amara, stir well and add water to make 1000 ml. Add a quantity of talcum powder, stir well and allow to stand to precipitate, filter the supernatant and pack into appropriate bottles.

Description A pale brown-yellowish to red colour liquid; odour, aromatic; taste, sweet and slightly astringent.

Identification (1) Extract 20 ml with two 20 ml quantities of ethyl acetate, Combine the extract and dissolve the residue in 2 ml of ethyl acetate to produce a solution as the test solution. Heat under reflux 0.5 g of Pericarpium Citri Reticulatae reference drug with 20 ml of ethyl acetate for 1 hour, filter, evaporate the filtrate and dissolve the residue in 1 ml of ethyl acetate as the reference drug solution. Carry out the method for thin layer chromatography (Appendix Ⅵ B), using silica gel G as the coating substance and a mixture of petroleum ether (60-90℃) and acetone (9 : 4) as the mobile phase. Apply separately to the plate 5 μl of each of the two solutions. After developing and removal of the plate, dry in air and spray with a 10% solution of sulphuric acid in ethanol. The spots in the chromatogram obtained with the test solution correspond in position and colour to the spots in the chromatogram obtained with the reference drug solution.
(2) Extract 50 ml with three 25-ml quantities of of *n*-butanol saturated with water, evaporate the extract to dryness, dissolve the residue with 5 ml of methanol, add 30 ml of ether and stir. Allow to stand to precipitate completely and filter. Dissolve the precipitate with 50 ml of hydrochloric acid solution (1→10), heat under reflux for 2 hours, stand, dissolve the precipitate with 2 ml of methanol as the test solution Ultrasonicate 0.5 g of Radix Polygalae with 20 ml of methanol for 15 minutes, filter and concentrate the filtrate to about 3 ml. Carry out the method as described under the test solution, beginning at "add 30 ml of ether," and prepare the reference drug solution in the same manner. Carry out the method for thin layer chromatography (Appendix Ⅵ B), using silica gel G as the coating substance and a mixture of toluene, ethyl acetate and formic acid (15 :

5 : 1) as the mobile phase. Apply separately 5 μl of each of the test solution and the reference drug solution to the plate. After developing and removal of the plate, dry in air and spray with a 5% solution of vanillin in sulfuric acid. The spots in the chromatogram obtained with the test solution correspond in position and colour to the spots in the chromatogram obtained with the reference drug solution.

Relative density Not less than 1.09 (Appendix Ⅶ A).

pH value 5.0-7.0 (Appendix Ⅶ G).

Other requirements Complies with the general requirements for syrups (Appendix Ⅰ H).

Assay Carry out the method for high performance liquid chromatography (Appendix Ⅵ D).

Chromatographic system and system suitability Use octadecylsilane bonded silica gel as the stationary phase and a mixture of methanol and 0.2 mol/L solution of sodium acetate (adjust pH to 4.2 with glacial acetic acid (54 : 46) as the mobile phase. As detector a spectrophotometer set at 250 nm. The number of theoretical plates of the column is not less than 3000, calculated with the reference to the peak of glycyrrhizinic acid.

Reference solution Dissolve a quantity of ammonium glycyrrhizinate CRS, accurately weighed, in methanol to prepare a solution containing 50 μg per ml. (equivalent to 48.98 μg per ml of glycyrrhizinic acid).

Test solution Measure accurately 5 ml of the syrups in a 25 ml volumetric flask, dilute with the mobile phase to the volume and mix well. Filter and use the successive filtrate as the test solution.

Procedure Inject accurately 10 μl of each of the reference solution and the test solution into the column, determine and calculate the content.
It contains not less than 0.15 mg of glycyrrhizinic acid ($C_{42}H_{62}O_{16}$) per ml.

Action To resolve phlegm and stop coughing.

Indications Coughing with copious *phlegm* due to block of the lung by phlegm; acute and chronic bronchitis with above symptoms.

Usage and dosage 15 ml, 3-4 times a day.

Storage Preserve in tightly closed containers, stored in a cool and dry place.

Xinning Pian
(心宁片)

Xinning Tablets

Ingredients Radix et Rhizoma Salviae Miltiorrhizae 300 g; Flos Sophorae 150 g; Rhizoma chuanxiong 150 g; Radix et Rhizoma Notoginseng 54 g; Flos Carthami 150 g; Lignum Dalbergiae Odoriferae 150 g; Radix Paeoniae Rubra 150 g.

Procedure Pulverize Radix et Rhizoma Notoginseng, Rhizoma chuanxiong into fine powder, and sift. Decoct the other five ingredients with water three times, 3 hours for the first time, 2 hours for the second time and 1 hour for the third time. Combine the decoctions and filter. Concentrate the filtrate to a thick extract, mix the thick extract with the above fine powder thoroughly. Dry, pulverize, sift, add a quantity of excipient, mix thoroughly, make granules, dry, and make to 500 tablets (big) or 1000 tablets (small), coat with sugar or film.

Description Film-coated or sugar-coated tablets with brown or dark brown core; taste, pungent.

Identification (1) Triturate 10 tablets, removed film-coat or sugar coat, to fine powder, add 50 ml of ether, ultrasonicate for 20 minutes, and filter. Reserve the residue for use in Identification (2) To 1 g of Rhizoma Chuanxiong reference drug, add 20 ml of ether, to prepare a solution in the same manner as the reference drug solution. Carry out the method for thin layer chromatography (Appendix Ⅵ B), using silica gel G as the coating substance and a mixture of hexane, and ethyl acetate (9 : 1) as the mobile phase. Apply separately to the plate 5 μl of each of above solutions. After developing and removal of the plate, dry in air and examine under ultraviolet light at 365 nm. The fluorescent spots in the chromatogram obtained with the test solution correspond in position and colour to the spots in the chromatogram obtained with the reference drug solution.
(2) To the residue obtained in Identification (1), expel the solvent, add 50 ml of methanol, ultrasonicate for 20 minutes, and filter. Evaporate the filtrate to dryness, dissolve the residue in 50 ml of water, and extract with two 30-ml quantities of *n*-butanol saturated with water, combine the *n*-butanol extracts, and wash with two 60-ml quantities of ammonia TS. Evaporate the *n*-butanol extracts to dryness, and dissolve the residue in 1 ml of methanol as the reference solution. To 0.5 g of Radix et Rhizoma Notoginseng reference drug, add 20 ml of methanol, to prepare a solution in the same manner as the reference drug solution. Dissolve a quantity of notoginsenoside R_1 CRS in methanol to produce a reference solution containing 1 mg per ml. Carry out the method for thin layer chromatography (Appendix Ⅵ B), using silica gel G as the coating substance and the lower layer of a mixture of chloroform, methanol, and water (13 : 7 : 2) as the mobile phase. Apply separately to the plate 2 μl of each of above three solutions. After developing and removal of the plate, dry in air. Spray with a 10 per cent solution of sulfuric acid in ethanol, and heat at 105℃ to spots clear. The spots in the chromatogram obtained with the test solution correspond in position and colour to the spots in the chromatogram obtained with the reference solution and reference drug solution.

Other requirements Comply with the general requirements for tablets (Appendix Ⅰ D).

Assay Carry out the method for high performance liquid chromatography (Appendix Ⅵ D).

Chromatographic system and system suitability Use octadecylsilane bonded silica gel as the stationary phase, and a mixture of methanol, water, dimethylformamide, and glacial acetic acid (2 : 95 : 2 : 1) as the mobile phase. As detector a spectrophotometer set at 283 nm. The number of theoretical plates of the column is not less than 6000, calculated with the reference to the peak of danshensu.

Reference solution Weigh accurately a quantity of sodium danshensu CRS, dissolve in 50% solution of methanol to produce a solution containing 50 μg per ml (correspond to 45 μg danshensu per ml).

Test solution Triturate 10 tablets, removed film-coat or sugar coat, to fine powder, weigh accurately 1 g of the powder in a stoppered conical flask, add accurately 50 ml of hydrochloric acid solution (1→50), closely stopper and weigh. Ultrasonicate for 30 minutes (power 250 W; 33 kHz), cool, weigh again, replenish the lost weight with hydrochloric acid solution (1→50), add 5 g of sodium chloride, stir well and centrifuge. Transfer accurately 25 ml of the supernatant solution to a separating funnel, extract by shaking with one 50-ml, one 30-ml, and two 20-ml quantities of ethyl acetate. Combine the ethyl acetate, and evaporate on a water bath to dryness, dissolve the residue in

50 per cent solution of methanol, transfer to a 25 ml of volumetric flask and add 50% of methanol to volume, mix well and filter. Discard the initial filtrate, and use the successive filtrate as the test solution.

Procedure Inject accurately 10 μl of each of the reference solution and the test solution into the column respectively and measure.

It contains not less than 0.40 mg of danshensu ($C_9H_{10}O_5$) per small tablet, not less than 0.8 mg of danshensu per big tablet, referred to Radix Salviae Miltiorrhizae.

Action To regulate *qi* flow to kill pain and promote blood circulation to resolve stagnated blood.

Indications Impeded flow of *yang-qi* due to stagnation of *qi* and blood with manifestations of constriction and pain in the chest, palpitation, shortness of breath; angina pectoris in coronary heart disease with above symptoms.

Usage and dosage 2-3 tablets for big tablet, 6-8 tablets for small tablet; 3 times a day.

Precaution Contraindicated for pregnant women.

Storage Preserve in tightly closed containers.

Xinqin Keli
(辛芩颗粒)

Xinqin Granules

Ingredients Radix et Rhizoma Asari 200 g; Radix Scutellariae 200 g; Herba Schizonepetae 200 g; Radix Saposhnikoviae 200 g; Radix Angelicae Dahuricae 200 g; Fructus Xanthii 200 g; Radix Astragali 200 g; Rhizoma Atractylodis Macrocephalae 200 g; Ramulus Cinnamomi 200 g; Rhizoma Acori Tatarinowii 200 g.

Procedure Decoct the ten ingredients with water for two times, 1.5 hours for the first time, and 1 hour for the second. Combine the decoction, filter, and concentrated the filtrate to a quantity. Add a quantities of sucrose and dextrin, make granules, dry at 80℃, and get 4000 g. Or concentrate the filtrate to a thick extract, dry spraying to powder, add a quantities of dextrin and adjuvant, make granules, dry and make to 1000 g.

Description Grayish brown granules; taste, sweet, slightly bitter; or brown-yellow to brown granules; taste, slightly sweet and bitter (without sucrose).

Identification (1) Grind 20 g or 5 g (without sucrose) to fine powder, add 60 ml of methanol, and ultrasonicate for 20 minutes. Filter, evaporate the filtrate, dissolve the residue with 15 ml of water, and extract with three 15-ml quantities of ether. Combine the extract, expel solvent, and dissolve the residue with 0.5 ml of ethyl acetate as the reference solution. Prepare a solution with 1 g of Radix et Rhizoma Asari reference drug and 30 ml of methanol in the same manner as the reference drug solution. Carry out the method for thin layer chromatography (Appendix Ⅵ B), using silica gel G as the coating substance and a mixture of *n*-hexane, chloroform and ethyl acetate (16 : 3 : 4) as the mobile phase. Apply separately 10 μl of the test solution and 5 μl of the reference drug solution to the plate. After developing and removal of the plate, dry in air, spray with 5% solution of vanillin in sulfuric acid, and heat at 105℃ to spot distinct. The spots in the chromatogram obtained with the test solution correspond in position and colour to the spots in the chromatogram obtained with the reference drug solution.

(2) Grind 6 g or 1.5 g (without sucrose) to fine powder, add 20 ml of ethanol, and ultrasonicate for 10 minutes. Filter, evaporate the filtrate, and dissolve the residue with 1 ml of methanol as the reference solution. Dissolve a quantity of baicalin CRS in methanol to produce a solution containing 1 mg per ml as the reference solution. Carry out the method for thin layer chromatography (Appendix Ⅵ B), using silica gel G prepared with 4% solution of sodium acetate and sodium carboxymethylcellulose as binder, as the coating substance and a mixture of ethyl acetate, butanone, formic acid and water (5 : 3 : 1 : 1) as the mobile phase. Apply separately 10 μl of the two solutions to the plate. After developing and removal of the plate, dry in air, and spray with 1% solution of ferric chloride in ethanol. The spot in the chromatogram obtained with the test solution corresponds in position and colour to the spot in the chromatogram obtained with the reference solution.

(3) Grind 20 g or 5 g (without sucrose) to fine powder, add 60 ml of ethanol, and ultrasonicate for 20 minutes. Filter, recover solvent, and dissolve the residue with 1 ml of chloroform as the test solution. Prepare a solution with 1 g of Radix Angelicae Dahuricae reference drug and 30 ml of methanol in the same manner as the reference drug solution. Carry out the method for thin layer chromatography (Appendix Ⅵ B), using silica gel G as the coating substance and ether as the mobile phase. Apply separately 10 μl of the test solution and 5 μl of the reference drug solution to the plate. After developing and removal of the plate, dry in air, and examine under ultraviolet light at 365 nm. The spots in the chromatogram obtained with the test solution correspond in position and colour to the spots in the chromatogram obtained with the reference drug solution.

(4) Grind 40 g or 10 g (without sucrose) to fine powder, add 100 ml of ethanol, and ultrasonicate for 30 minutes. Filter, apply the filtrate to a neutral aluminia oxide column (100-200 mesh, 5 g, 1-1.2 cm in diameter), elute with 100 ml of 40% methanol, collect the eluate, and evaporate to dryness. Dissolve the residue with 30 ml of water, and extract with two 20-ml quantities of *n*-butanol saturated with water. Combine the extract, wash with three 20-ml quantities of 1% solution of sodium hydroxide, and wash again with two 15-ml quantities of water. Dehydrate the extract with sodium sulfate anhydrous, filter, evaporate the filtrate, and dissolve the residue with 0.5 ml of methanol as the test solution. Dissolve a quantity of astragaloside Ⅳ CRS in methanol to produce a solution containing 1 mg per ml as the reference solution. Carry out the method for thin layer chromatography (Appendix Ⅵ B), using silica gel G as the coating substance and the lower layer of a mixture of chloroform, methanol and water (13 : 7 : 2), keep at below 10℃ overnight as the mobile phase. Apply separately 10 μl of the two solutions to the plate. After developing and removal of the plate, dry in air, spray with 10% solution of sulfuric acid in ethanol, and heat at 105℃ to spot clear. The spot in the chromatogram obtained with the test solution corresponds in position and colour to the spot in the chromatogram obtained with the reference solution.

Water Not more than 7.0 per cent (Appendix H), use for granules without sucrose.

Other requirement Comply with the general requiments for granules (Appendix Ⅰ C), except, Determination of water for granules without sucrose.

Assay Carry out the method for high performance liquid chromatography (Appendix Ⅵ D).

Chromatographic system and system suitability Use octadecylsilane bonded silica gel as the stationary phase and a mixture of methanol, water and phosphoric acid (47 : 53 : 0.2) as the mobile phase. As detector a spectrophotometer set at 280 nm. The number of theoretical plates of the

column is not less than 1500, calculated with the reference to the peak of baicalin.

Reference solution Dissolve a quantity of baicalin CRS, weigh accurately, in methanol to produce a solution containing 40 μg of baicalin per ml.

Test solution Pulverize the granules, obtained under the test of weight variation, to fine powder, weigh accurately 1.2 g or 0.3 g (without sucrose) in a stoppered conical flask, add accurately 50 ml of 70% ethanol, stopper, weigh, ultrasonicate (power 250 W, frequency 50 kHz) for 30 minutes, allow to cool, weigh again, replenish the lost weight with 70% ethanol, and mix thoroughly. Filter, and use the filtrate as the test solution.

Procedure Inject accurately 10 μl of each of the reference solution and the test solution into the column, determine and calculate.

It contains not less than 30.0 mg of baicalin ($C_{21}H_{18}O_{11}$) per bag, referred to Radix Scutellariae.

Action To replenish *qi* to strengthen the superficies, and disperse *wind* and free the orifices.

Indications Itching nose, sneezing, running nose and proneness to common cold due to a deficiency of *lung-qi* and invasion by *wind*; allergic rhinitis with above symptoms.

Usage and dosage 1 pack, 3 times a day, taken with boiled water. 20 days making a course of treatment.

Strength (1) 20 g per pack
(2) 5 g (without sucrose) per pack

Storage Preserve in tightly closed container.

Xintong Koufuye (心通口服液)

Xintong Mixture

Ingredients Radix Astragali; Radix Codonopsis; Radix Ophiopogonis; Radix Polygoni Multiflori; Herba Epimedii; Radix Puerariae Lobarae; Radix Angelicae Sinensis; Radix et Rhizoma Salviae Miltiorrhizae; Spina Gleditsiae; Thallus Laminariae seu Eckloniae; Concha Ostreae; Fructus Aurantii Immaturus.

Procedure Heat under reflux Radix Puerariae Lobarae and Radix Salviae Miltiorrhizae in 70% ethanol twice, 1 hour for each time, combine the extract; decoct the above drug residue and the other ingredients with water twice, 2 hours for the first time and 1.5 hours for the second time, combine the decoctions, filter and concentrate the filtrate to 1500 ml. Combine the ethanol extract and the aqueous extract, adjust with a quantity of ethanol to a content of 65% ethanol, store at a lower temperature for 24-48 hours, filter, recover ethanol from the filtrate and concentrate to 1300 ml, store at a lower temperature for 24-48 hours; filter, add 150 g of simple syrup, adjust to pH 7.0 with a 10% solution of sodium hydroxide, add water to 1500 ml, stir well, filter, pack and sterilize.

Description A clear, brown-red liquid; taste sweet and slightly bitter.

Identification (1) Extract 5 ml with 10 ml of chloroform, discard the chloroform layer, extract the aqueous layer with 10 ml of *n*-butanol, evaporate the *n*-butanol extract to dryness, dissolve the residue in 2 ml of methanol as the test solution. Dissolve puerarin CRS in methanol to produce a solution containing 1 mg per ml as the reference solution. Carry out the method for thin layer chromatography (Appendix Ⅵ B), using silica gel G containing sodium carboxymethylcellulose as the coating substance and a mixture of chloroform, methanol and water (7 : 2.5 : 0.25) as the mobile phase. Apply separately to the plate 5 μl of each of the two solutions. After developing and removal of the plate, dry in air. Spray with a 1% solution of magnesium acetate in ethanol, examine under ultraviolet light at 365 nm. The fluorescent spot in the chromatogram obtained with the test solution corresponds in position and colour to the spot in the chromatogram obtained with the reference solution.

(2) Evaporate 10 ml of the mixture to dryness, dissolve by stirring the residue in 20 ml of dehydrated ethanol on a water bath, stand to cool, filter, evaporate the filtrate to dryness, dissolve the residue in 2 ml of methanol as the test solution. Dissolve CRS in methanol to produce a solution containing 1 mg per ml as the reference solution. Carry out the method for thin layer chromatography (Appendix Ⅵ B), using silica gel G containing sodium carboxymethylcellulose as the coating substance and a mixture of benzene, ethyl acetate and formic acid (15 : 5 : 2) as the mobile phase. Apply separately 1 μl of each of the two solutions to the plate. After developing and removal of the plate, dry in air. Spray with a mixture (freshly prepared) of 1% solution of potassium ferricyanide and equal quantity of 2% solution of ferric chloride. The spot in the chromatogram obtained with the test solution corresponds in position and colour to the spot in the chromatogram obtained with the reference solution.

(3) Extract 20 ml with 20 ml of chloroform, discard the chloroform layer, extract the aqueous layer with two 20-ml quantities of *n*-butanol, combine the extracts, wash with 20 ml of water, discard the aqueous layer, add a quantity of anhydrous sodium sulfate in the *n*-butanol extract, filter, evaporate the filtrate to dryness, dissolve the residue in 2 ml of methanol, apply to a column packed with neutral aluminium oxide (100-200 mesh, 5g, 1-1.5 cm in internal diameter), elute with 100 ml of 40% methanol, collect the eluate, evaporate to dryness on a water bath and dissolve the residue in 0.5 ml of methanol as the test solution. Dissolve astragaloside Ⅳ CRS in methanol to produce a solution containing 1 mg per ml as the reference solution. Carry out the method for thin layer chromatography (Appendix Ⅵ B), using silica gel G as the coating substance and the lower layer a mixture of chloroform, methanol and water (13 : 7 : 2) as the mobile phase. Apply separately 3 μl of each of the two solutions to the plate. After developing and removal of the plate, dry in air. Spray with a 10% solution of sulfuric acid in ethanol and heat at 105℃ for 5 minutes. The brown spot in the chromatogram obtained with the test solution corresponds in position and colour to the spot in the chromatogram obtained with the reference solution.

Relative density Not less than 1.08 (Appendix Ⅶ A).

pH value 5.0-7.0 (Appendix Ⅶ G).

Other requirements Comply with the general requirements for mixtures (Appendix Ⅰ J).

Assay Carry out the method for high performance liquid chromatography (Appendix Ⅵ D).

Chromatographic system and system suitability Use octadeylsilane bonded silica gel as the stationary phase and a mixture of methanol and water (21 : 79) as the mobile phase. As detector a spectrosphotometer set at 250 nm. The number of the theoretical plates of the column is not less than 3000, calculated with reference to the peak of puerarin.

Reference solution Dissolve 11 mg of puerarin CRS, weigh accurately, with methanol in a 10 ml volumetric flask, dilute with methanol to the volume and mix well. Measure

accurately 1 ml, transfer to a 25 ml volumetric flask, dilute with 30% methanol to the volume (containing 44 μg of puerarin per ml).

Test solution Measure accurately 5 ml of the mixture obtained under the test of content variation, transfer to a 50 ml volumetric flask, dilute with acetone to the volume and mix well. Centrifuge, measure accurately 5 ml of the supernatant liquid, transfer to a 50 ml volumetric flask, dilute with 30% methanol to the volume and mix well.

Procedure Inject accurately 10 μl of each of the reference solution and the test solutions into the column and measure. It contains not less than 2.2 mg of puerarin ($C_{21}H_{20}O_9$) per ml, referred to Radix Puerariae Lobarae.

Action To invigorate *qi* and promote blood circulation, resolve *phlegm* and dredge meridians.

Indications Obstruction of *qi* in the chest due to a deficiency of *qi* and *yin* and retention of *phlegm* and blood stasis, with manifestations of heart pain, constriction in the chest, shortness of breath, or nausea, vomiting and poor appetite; coronary heart disease and angina pectoris with above symptoms.

Usage and dosage 10-20 ml, 2-3 times a day.

Precaution Contraindicated for pregnant women; taken after meals when there is acid regurgitation often.

Strength 10 ml per phial

Storage Preserve in tightly closed containers, store in a cool and dark place.

Xiongju Shangqing Wan (芎菊上清丸)

Xiongju Shangqing Pills

Ingredients Rhizoma Chuanxiong 20 g; Flos Chrysanthemi 240 g; Radix Scutellariae 120 g; Fructus Gardeniae 30 g; Fructus Viticis (stir-baked) 30 g; Rhizoma Coptidis 20 g; Herba Menthae 20 g. Fructus Forsythiae 30 g; Spica Schizonepetae 30 g; Rhizoma et Radix Notopterygii 20 g; Rhizoma Ligustici 20 g; Radix Platycodonis 30 g; Radix Saposhnikoviae 30 g; Radix et Rhizoma Glycirrhizae 20 g; Radix Angelicae Dahuricae 80 g.

Procedure Pulverize the above fifteen ingredients to fine powder, sift and mix thoroughly, make pills with water and dry.

Description Brownish-yellow to brown watered pills; taste, bitter.

Identification (1) Microscopical: Bast fibres pale yellow, fusiform, walls thickened, with fine pit canals. Stone cells of testa yellow or pale brown, mostly broken, long polygonal, rectangular or irregular when intact, walls thickened, with big rounded pits, lumina brownish-red. Epidermal non-glandular hairs of persistent calyx 2-3 cells, the lower part of apical cells relatively wide, warty protrudings on cell walls. Xylem fibre bundles brightly yellow, relatively thin and long, slightly thickened walls, pits distinct. The upper and lower layers of fibres of endocarp crisscrossed, short fusiform. Stone cells of pericarp pale yellowish-brown or pale yellow, mostly form pieces, limits of stone cells indistinct, with slightly thickened and deeply sinuous anticlinal walls, sparse pits. Vittae containing golden-yellow secretion, about 30 μm in diameter. Fibre bundles surrounded by parenchymatous cells containing prisms of calcium oxalate, forming crystal fibres.

(2) To 4 g of the powdered pills add 20 ml of methanol, ultrasonicate for 20 minutes, filter and evaporate the filtrate to dryness. Dissolve the residue in a small quantity of ethanol, mix with 1 g of neutral aluminium oxide and dry on a water bath. Apply to a column packed with neutral aluminium oxide (100-200 mesh, 2 g, 1 cm in internal diameter), elute with 30 ml of ethanol and evaporate the eluate to dryness. Dissolve the residue in 1 ml of ethanol and use the solution as the test solution. Dissolve geniposide CRS in ethanol to produce a solution containing 1 mg per ml as the reference solution. Carry out the method for thin layer chromatography (Appendix Ⅵ B), using silica gel G as the coating substance and the lower layer of a mixture of chloroform, ethyl acetate, methanol and water (15 : 40 : 22 : 10), stand below 10℃, as the mobile phase. Apply separately to the plate 2 μl of each of the two solutions. After developing and removal of the plate, dry in air, spray with a 5% solution of vanillin in sulfuric acid, and heat to the spots clear if necessary. The spot in the chromatogram obtained with the test solution corresponds in position and colour to the spot in the chromatogram obtained with the reference solution.

(3) To 3 g of the powdered pills add 20 ml of ether, heat under reflux on a water bath for 30 minutes and filter. Remove ether from drug residue in air, add 20 ml of methanol, ultrasonicate for 20 minutes, filter and evaporate the filtrate to dryness. Dissolve the residue in 2 ml of methanol and use the supernatant as the test solution. Dissolve baicalin CRS in methanol to produce a solution containing 1 mg per ml as the reference solution. Carry out the method for thin layer chromatography (Appendix Ⅵ B), using silica gel G as the coating substance prepared with a solution of sodium carboxymethylcellulose containing 0.4% sodium acetate and a mixture of ethyl acetate, butanone, formic acid and water (5 : 3 : 1 : 1) as the mobile phase. Apply separately to the plate 5 μl of each of the two solutions. After developing and removal of the plate, dry in air and spray with a 5% solution of ferric chloride in ethanol. The spot in the chromatogram obtained with the test solution corresponds in position and colour to the spot in the chromatogram obtained with the reference solution.

Assay Grind 6 g of the pills to fine powder, passed through No. 4 sieve, weigh accurately 1 g of the powder in a stoppered conical flask, add accurately 25 ml of a mixture of methanol and hydrocloric acid (100 : 1), weigh and macerate overnight. Ultrasonicate for 45 minutes, cool to ambient temperature weigh again and replenish the lost weight with the above mixture solution, filter and use the successive filtrate as the test solution. Dissolve a quantity of berberine hydrochloride CRS, weigh accurately, in the same mixture solution to produce a solution containing 0.06 mg per ml as the reference solution. Carry out the method for thin layer chromatography (Appendix Ⅵ B), using silica gel GF_{254} containing sodium carboxymethylcellulose as the coating substance and a mixture of benzene, ethyl acetate, methanol, isopropanol and water (12 : 6 : 3 : 3 : 0.6) as the mobile phase. Apply accurately 1-2 μl of the test solution, 1 μl and 2 μl of the reference solution to the plate, separately. After developing in a chamber saturated with ammonia vapour and allowing the solvent front to ascend 8 cm above the line of application, remove the plate and dry in air. Carry out the method for thin layer chromatography (Appendix Ⅵ B, thin layer chromatographic scaning method), scan with fluorescence mode at wavelength of $\lambda_{ex}=366$ nm, measure the integration value of fluorescent strength for the two solutions and calculate.

It contains not less than 0.97 mg per tablet of berberine hydrochloride ($C_{20}H_{18}ClNO_4$), referred to Rhizoma Coptidis.

Action To clear *heat* and release the exterior, disperse *wind* to kill pain.

Indications Aversion to wind, fever, migraine and headache, thin nasal discharge, toothache and sore throat due to affliction from external *wind*.

Usage and dosage 6 g, twice a day.

Precaution Be cautious about debilitated patients.

Storage Preserve in well closed containers, protected from moisture.

Xuanmai Ganjie Keli (玄麦甘桔颗粒)

Xuanmai Ganjie Granules

Ingredients Radix Scrophulariae 400 g; Radix Ophiopogonis 400 g; Radix et Rhizoma Glycirrhizae 400 g; Radix Platycodonis 400 g.

Procedure Decoct the above four ingredients with water for 3 times, combine the decoctions and filter. Allow the filtrate to stand for 12 hours, concentrate the supernatant to thick extract with the relative density of 1.32-1.35. To the thick extract add a quantities of sucrose and dextrin, make granules and dry.

Description Pale brown granules; taste, sweet.

Identification (1) Dissolve 10 g in 40 ml of water by heating, cool and filter. Extract the filtrate with two 30-ml quantities of ether. Separate the aqueous layer, extract with 40 ml of *n*-butanol saturated with water. Separate the *n*-butanol layer and evaporate to dryness. Dissolve the residue in 1 ml of methanol as the test solution. To 2.5 g of Radix Scrophulariae reference drug add 50 ml of ethanol, heat under reflux for 1 hour and filter. Concentrate the filtrate to dryness, dissolve the residue in 30 ml of water by heating and prepare the reference drug solution in the same manner. Carry out the method for thin layer chromatography (Appendix Ⅵ B), using silica gel G as the coating substance and a mixture of chloroform and methanol (5 : 1) as the mobile phase. Apply separately to the plate 10 μl of the test solution and 6 μl of the reference drug solution. After developing and removal of the plate, dry it in air, spray with a 1% solution of vanillin in sulfuric acid and heat at 105℃ until the spots appear. The spots in the chromatogram obtained with the test solution correspond in position and colour to the spots in the chromatogram obtained with the reference drug solution.

(2) To 10 g add 20 ml of water, 20 ml of chloroform and 3 ml of hydrochloric acid, heat under reflux for 1 hour and cool. Separate the chloroform layer, filter and evaporate the filtrate to dryness. Dissolve the residue in 1 ml of dehydrated ethanol and use the solution as the test solution. Dissolve glycyrrhetinic acid CRS in dehydrated ethanol to produce a solution containing 2 mg per ml as the reference solution. Carry out the method for thin layer chromatography (Appendix Ⅵ B), using silica gel G as the coating substance and a mixture of petroleum ether (30-60℃), benzene, ethyl acetate and glacial acetic acid (10 : 20 : 7 : 0.5) as the mobile phase. Apply separately to the plate 8 μl of the test solution and 6 μl of the reference solution. After developing and removal of the plate, dry in air, spray with a 10% solution of phosphomolybdic acid in ethanol and heat at 105℃ until the spots appear. The spot in the chromatogram obtained with the test solution corresponds in position and colour to the spot in the chromatogram obtained with the reference solution.

(3) Triturate 10 g of the granules to fine powder, heat under reflux with 40 ml of methanol on a water bath for 1 hour, filter and evaporate the filtrate to dryness. Dissolve the residue in about 10 ml of water, extract with three 15-ml quantities of *n*-butanol saturated with ammonia TS, separate the *n*-butanol layer and evaporate to dryness. Dissolve the residue in 2 ml of methanol and use the solution as the test solution. Prepare a solution with 2 g of Radix Ophiopogonis reference drug in the same manner as the reference drug solution. Carry out the method for thin layer chromatography (Appendix Ⅵ B), using silica gel G as the coating substance and a mixture of chloroform, methanol and water (15 : 10 : 2) as the mobile phase. Apply separately to the plate 2-5 μl of each of the two solutions. After developing and removal of the plate, dry in air, spray with a 10% solution of sulfuric acid in ethanol and heat at 105℃ until the spots appear. The spots in the chromatogram obtained with the test solution correspond in position and colour to the spots in the chromatogram obtained with the reference drug solution.

Other requirements Comply with the general requirements for granules (Appendix Ⅰ C).

Action To clear *heat* and nourish *yin*, and resolve phlegm to relieve sore throat.

Indications Dryness of the nose and mouth, and sore throat due to flaming of fire from *yin* deficiency.

Usage and dosage 10 g, 3-4 times a day, taken after dissolved in boiled water.

Strength 10 g per pack

Storage Preserve in tightly closed containers.

Xuanshi Yaoshui (癣湿药水)

Xuanshi Solution

Ingredients Cortex Pseudolaricis 250 g; Fructus Cnidii 125 g; Semen Hydnocarpi 125 g; Radix Stemonae 125 g; Radix Saposhnikoviae 50 g; Radix Angelicae Sinensis 100 g; Caulis Impatientis Balsaminae 125 g; Cacumen Platycladi 100 g; Fructus Evodiae 50 g; Pericarpium Zanthoxyli 125 g; Periostracum Cicadae 75 g; Mylabris 3 g.

Procedure Pulverize Mylabris to fine powder. and the other eleven ingredients to coarse powder. Combine the above powders and mix well. Carry out the method for percolation as described under Liquid Extracts and Extracts (Appendix Ⅰ O), using a mixture of ethanol and glacial acetic acid (3 : 1) as solvent. Macerate for 48 hours and percolate slowly. Collect 6700 ml of the percolate and allow to stand. To the supernatant liquid add a quantity of essence and stir well.

Description A dark yellowish-green clear liquid; odour, characteristic of acetic acid.

Identification Evaporate 5 ml to dryness, dissolve the residue in 5 ml of water and extract with two 10-ml quantities of ether. Combine the extracts, add 5 ml of saturated solution of sodium bicarbonate, shake, separate the ether solution and remove ether in air. Dissolve the residue in 1 ml of ether as the test solution. Macerate 0.5 g of Fructus Cnidii reference drug in 10 ml of a mixture of glacial acetic acid and ethanol (1 : 3) for 24 hours, filter and evaporate the filtrate to dryness. To prepare a solution in the same manner, begining from "disslove the residue in 5 ml of water", as the reference drug solution. Macerate 0.1 g of Radix Angelicae Sinensis reference drug in 2 ml of ether for several hours, use the supernatant as the reference drug

solution. Dissolve osthole CRS in methanol to prepare a solution containing 2 mg per ml as the reference solution. Carry out the method for thin layer chromatography (Appendix Ⅵ B), using silica gel G as the coating substance and a mixture of *n*-hexane and ethyl acetate (17 : 3) as the mobile phase. Apply separately to the plate 4 μl of the test solution, 2 μl of the reference drug solutions and 1 μl of the reference solution. After developing and removal of the plate, dry in air and examine under ultraviolet light at 365 nm. The principal fluorescent spots in the chromatogram obtained with the test solution correspond in position and colour to the spots in the chromatogram obtained with the reference drug solutions; the fluorescent spot in the chromatogram obtained with the test solution corresponds in position and colour to the spot in the chromatogram obtained with the reference solution.

Relative density 0.86-0.92 (Appendix Ⅶ A).

Total solids Filter a quantity of the solution through a dry filter paper. Transfer accurately 25 ml into a evaporating dish, previously dried to constant weight, evaporate to dryness on a water bath and dry at 105℃ for 3 hours. Allow to cool for 30 minutes in a desiccator, weigh rapidly, the remained solids not less than 0.75 g.

Content of acetic acid Transfer accurately 2 ml to a 100 ml volumetric flask, dilute with freshly boiled and cooled water to volume. Measure accurately 25 ml of the dilute solution, add 10 ml of freshly boiled and cooled water and 2-3 drops of phenolphthalein IS, titrate with sodium hydroxide (0.1 mol/L) VS, until the colour turns to pink. Each ml of sodium hydroxide (0.1 mol/L) VS is equivalent to 6.005 mg of $C_2H_4O_2$. It contains not less than 10 per cent of acetic acid.

Action To expel *wind* and *dampness*, and kill parasites to stop itching.

Indications Tinea manuum and tinea pedis due to *wind-dampness* and *toxin* of parasites with manifestations of popular eruptions, blisters, desquamation and itching of different degrees.

Usage and dosage Clean the affected area and apply the lotion to the lesion, 3-4 times a day; for onychomycosis, remove the spongy substance of the nails in order to facilitate the permeation of the lotion.

Precaution It is for external application only. It is strictly forbidden to apply it to the eyes, nose and mucosa of the mouth.

Storage Preserve in tightly closed containers.

Xueshuan Xinmaining Jiaonang (血栓心脉宁胶囊)

Xueshuan Xinmaining Capsules

Ingredients Rhizoma Chuanxiong; Flos Sophorae; Radix et Rhizoma Salviae Miltiorrhizae; Hirudo; Radix Ilicis Pubescens; Calculus Bovis; Moschus; Total Saponins of Ginseng Stems and Leaves; Borneolum Syntheticum; Venenum Bufonis.

Procedure Decoct the Radix et Rhizoma Salviae Miltiorrhizae; Hirudo, Radix Ilicis Pubescens and Rhizoma Chuanxiong with 8 times, 5 times and 5 times volume of 60% ethanol three times, 3 hours for the first time, 2 hours for the second time and 1 hour for the third time, filter. Combine the filtrate, recover ethanol and concentrate in a vacuum, dry and pulverize. Pulverize Hirudo to fine powder for the latter use. To Flos Sophorae in 5 times volume of water, adjust pH to 8-9 with the solution saturated with calcium carbonate, heat to boil slightly for 30 minutes, filter, extract the residues in the same manner twice. Combine the filtrate, concentrate in a vacuum, dry under low temperature (60℃), pulverize. Pulverize Moschus, Venenum Bufonis and Calculus Bovis to fine powder, and mix with Borneolum Syntheticum fine powder, total Saponins of Ginseng Stems and Leaves and the above two powders, mix well, make to 1000 capsules.

Description Hard capsules, containing yellowish-brown or blackish-brown powder; taste, pungent and slightly bitter.

Identification (1) Place 2.5 g of the content, add 50 ml of methanol, heat under reflux for 1 hours, filter, evaporate the filtrate to dryness, dissolve the residue in 10 ml of water, extract with two 20-ml quantities of ether. Combine the layer of ether (keep the layer of water for further use), evaporate to dryness, and dissolve the residue in 2 ml of methanol as the test solution. Dissolve cholic acid CRS in methanol to produce a solution containing 1 mg per ml as the reference solution. Carry out the method for thin layer chromatography (Appendix Ⅵ B), using silica gel G mixed with sodium carboxymethylcellulose as the coating substance and the mixture of chloroform, ether and glacial acetic acid (2 : 2 : 1) as the mobile phase. Apply separately 3 μl of the test solution and the reference solution to the plate. After developing and removal of the plate, dry in air. Spray with 10% solution of phosphomolybdic acid in ethanol and heat at 105℃ to the spots clear. The spot in the chromatogram obtained with the test solution correspond in position and colour to the spot in the chromatogram obtained with the reference solution.

(2) To 2 g of Rhizoma Chuanxiong reference drug in 10 ml of chloroform, cool macerate for 1 hour, filter, and evaporate the filtrate to about 0.5 ml as the reference drug solution. Carry out the method for thin layer chromatography (Appendix Ⅵ B), using silica gel G mixed with sodium carboxymethylcellulose as the coating substance and the mixture of chloroform and petroleum ether (60-90℃) (3 : 1) as the mobile phase. Apply separately 3 μl of the above test solution obtained under the test for Identification (1) and the reference drug solution to the plate. After developing and removal of the plate, dry in air, and examine under ultraviolet light at 365 nm. The fluorescent spots in the chromatogram obtained with the test solution correspond in position and colour to the fluorescent spots in the chromatogram obtained with the reference drug solution.

(3) To the water layer obtained under the test for Identification (1), extract with two 20-ml quantities of n-butanol by shaking. Combine the *n*-butanol extracts, evaporate 1 ml of the *n*-butanol extract to dryness, and dissolve the residue in 1 ml of methanol as the test solution. Dissolve rutin CRS in methanol to prepare a solution containing 1 mg per ml as the reference solution. Carry out the method for thin layer chromatography (Appendix Ⅵ B), using silica gel G mixed with sodium carboxymethylcellulose as the coating substance and the mixture of ethyl acetate, formic acid and water (8 : 1 : 1) as the mobile phase. Apply separately 4 μl of the test solution and the reference solution to the plate. After developing and removal of the plate, dry in air, and fumigate the plate in ammonia vapour for 30 miuntes. The spot in the chromatogram obtained with the test solution corresponds in position and colour to the spot in the chromatogram obtained with the reference solution.

(4) To the remains *n*-butanol extract obtained under the test for Identification (3), add 3 times volume of ammonia TS, wash twice, discard the washing solution, evaporate the *n*-

butanol layer to dryness, and dissolve the residue in 1 ml of methanol as the test solution. Dissolve ginsenoside Rb_1, ginsenoside Re and ginsenoside Rg_1 CRS in methanol to produce three solutions containing 1 mg per ml respectively as the reference solutions. Carry out the method for thin layer chromatography (Appendix Ⅵ B), using silica gel G as the coating substance and the lower layer of the mixture of chloroform, ethyl acetate, methanol and water (15 : 40 : 22 : 10) stored below 10℃ as the mobile phase. Apply separately 2 μl of the four solutions to the plate. After developing and removal of the plate, dry in air. Spray with 10% solution of sulfuric acid in ethanol, heat at 105℃ to the spots clear. The spots in the chromatogram obtained with the test solution correspond in position and colour to the spots in the chromatogram obtained with the reference solutions.

Other requirements Comply with the general requirements for capsules (Appendix Ⅰ L).

Assay Carry out the method for high performance liquid chromatography (Appendix Ⅵ D)

Chromatographic system and system suitability Use octadecylsilane bonded silica gel as the stationary phase and the mixture of methanol, water and glacial acetic acid (45 : 54 : 1) as the mobile phase. As detector a spectrophotometer set at 257 nm. The number of theoretical plates for the column is not less than 3000, calculated with the reference to the peak of rutin.

Reference solution Dissolve a quantity of rutin CRS dried previously to constant weight at 120℃ under reduced pressure, weigh accurately, in methanol to produce a solution containing 0.2 mg per ml as the reference solution.

Test solution Weigh accurately 0.5 g of the content of the capsules obtained under the test of weight variation, pulverized to fine powder, to 50 ml volumetric flask. Add 45 ml of methanol, stopper tightly, ultrasonicate (power 250 W, frequency 25 kHz) for 30 minutes, allow to cool, add methanol to volume, mix well and filter. Discard the initial filtrate, and use the successive filtrate as the test solution.

Procedure Inject accurately 10 μl of the reference solution and the test solution into the column and calculate the content.

It contains not less than 12 mg of anhydrous rutin ($C_{27}H_{30}O_{16}$), referred to Flos Sophorae.

Action To replenish *qi* and promote blood circulation, and induce resuscitation and kill pain.

Indications Stroke and impeded flow of *yang-qi* in the chest due to a deficiency and stagnation of blood with manifestations of dizziness, hemiplegia, constriction in the chest, heart pain, palpitation and shortness of breath, convalescence of ischemic stroke and angina pectoris in coronary heart disease with above symptoms.

Usage and dosage 4 capsules, 3 times a day.

Precaution Contraindicated for pregnant women.

Strength 0.5 g per capsule

Storage Tightly closed.

Xuezhiling Pian
(血脂灵片)

Xuezhiling Tablets

Ingredients Rhizoma Alismatis; Semen Cassiae; Fructus Crataegi; Radix Polygoni Multiflori Praeparata Cum Succo Glycines Sotae.

Procedure Pulverize 100 g of the Radix Polygoni Multiflori Praeparata Cum Succo Glycines Sotae to fine powder. Decoct the residuary Radix Polygoni Multiflori Praeparata Cum Succo Glycines Sotae and Rhizoma Alismatis with 90% of ethanol twice, 3 hours for each time, combine the decoction; decoct Semen Cassiae and Fructus Crataegi with 70% of ethanol twice, 3 hours for the first time and 2 hours for the second time. Combine the decoction, recover ethanol, and concentrate to a thick extract for latter use. Decoct the residue of the above drugs with water for three times, 2 hours for former two times and 1 hour for the third time, combine the decoction, filter, and allow to stand for 12 hours, concentrate the supernatant liquid to a thick extract, mix with the above thick ethanol extract and fine powder, stir well, make granules, compress to 1000 tablets and coat with film.

Description Film coated tablets with yellowish-brown to blackish-brown core; taste, slightly bitter.

Identification (1) To 5 tablets, pulverized to fine powder, add 30 ml of methanol, ultrasonicate for 30 minutes, and filter, evaporate the filtrate to dryness, dissolve the residue in 10 ml of dilute hydrochloric acid solution, heat on a water bath for 30 minutes, cool, extract with two quantities, each of 15 ml, of ether, combine the ether layer, evaporate to dryness, and dissolve the residue in 1 ml of ether as the test solution. Prepare a solution of 0.5 g of Radix Polygoni Multiflori reference drug in the same manner as the reference drug solution. Carry out the method for thin layer chromatography (Appendix Ⅵ B), using silica gel G as the coating substance and the upper layer of the mixture of petroleum ether (30-60℃), ethyl formate and formic acid (15 : 5 : 1) as the mobile phase. Apply separately 1 μl of thetest solution and the reference solution to the plate. After developing and removal of the plate, dry in air, heat at 105℃ for about 5 minutes, and examine under ultraviolet lightat 365 nm. The fluorescent spots in the chromatogram obtained with the test solution correspond in position and colour to the fluorescent spots in the chromatogram obtained with the reference drug solution.

(2) To 5 tablets, pulverized to fine powder, add 30 ml of ether, macerate for 30 minutes, ultrasonicate for 15 minutes, and filter, evaporate the filtrate to dryness, and dissolve the residue in 1 ml of ethanol absolute as the test solution. Dissolve ursolic acid CRS in ethanol absolute to produce a solution containing 0.5 mg per ml as the reference solution. Carry out the method for thin layer chromatography (Appendix Ⅵ B), using silica gel G mixed with 4% solution of sodium acetate as the coating substance and the mixture of ether and acetone (4 : 1) as the mobile phase. Apply separately 1 μl of the the test solution and the reference solution to the plate. After developing and removal of the plate, dry in air. Spray with 5% solution of sulfuric acid in ethanol, heat at 105℃ to the spots clear, and examine under ultraviolet light at 365 nm. The fluorescent spot in the chromatogram obtained with the test solution corresponds in position and colour to the fluorescent spot in the chromatogram obtained with the reference solution.

Other requirements Comply with the general requirements for tablets (Appendix Ⅰ D).

Assay ***Radix Polygoni Multiflori Praeparata Cum Succo Glycines Sotae*, *Semen Cassiae*** Carry out the method for high performance liquid chromatography (Appendix Ⅵ D).

Chromatographic system and system suitability Use octadecylsilane bonded silica gel as the stationary phase and the mixture of methanol and 0.1% solution of phosphoric

acid (85 : 15) as the mobile phase. As detector a spectrophotometer set at 254 nm. The number of theoretical plates for the column is not less than 3000, calculated with the reference to the peak of emodin.

Reference solution Dissolve a quantity of emodin CRS, weigh accurately, in methanol to produce a solution containing 10 μg of emodin per ml as the reference solution.

Test solution Weigh about 0.3 g of the content of the capsules obtained under the test of weight variation, pulverized to fine powder, weigh accurately to a conical flask with stopper. Add accurately 25 ml of methanol, stopper tightly, weighed accurately, heat under reflux for 1 hour, cool, weighted accurately again, replenished the lost weight with methanol, mix well and filter. Discard the initial filtrate, measure accurately 5 ml of the successive filtrate to a stopped flask, add 10 ml 2.5 mol/L solution of sulfuric acid and 20 ml of chloroform, heat under reflux for 2 hours. To chloroform layer, extract the water layer with 10 ml of chloroform by shaking, combine the chloroform, wash with 10 ml of water, evaporate the chloroform extracts to dryness on a water bath, dissolve the residue in methanol, transfer to a 10 ml volumetric flask, add methanol to volume, mix well and filter. Discard the initial filtrate, and use the successive filtrate as the test solution.

Procedure Inject accurately 10 μl of each of the reference solution and the test solution into the column and calculate the content.

It contains not less than 0.15 mg of emodin ($C_{15}H_{10}O_5$) per tablet, referred to Radix Polygoni Multiflori Praeparata Cum Succo Glycines Sotae and Semen Cassiae.

Radix Polygoni Multiflori Praeparata Cum Succo Glycines Sotae Carry out the method for high performance liquid chromatography (Appendix Ⅵ D)

Chromatographic system and system suitability Use octadecylsilane bonded silica gel as the stationary phase and the mixture of acetonitrile and water (22 : 78) as the mobile phase. As detector a spectrophotometer set at 320 nm. The number of theoretical plates for the column is not less than 3000, calculated with the reference to the peak of 2,3,5,4'-tetrahydroxystilbene-2-O-β-D-glucoside.

Reference solution Dissolve a quantity of 2,3,5,4'-tetrahydroxystilbene-2-O-β-D-glucoside CRS, weigh accurately, in methanol to produce a mixed solution containing each CRS 36 μg per ml as the reference solution.

Test solution Weigh about 0.2 g of the content of the capsules obtained under the test of weight variation, pulverized to fine powder, weigh accurately to a stopper conical flask. Add accurately 25 ml of methanol, stopper tightly, weigh accurately, ultrasonicate (power 350 W, frequency 50 kHz) for 30 minutes, allowed to cool, weight accurately again, replenished the lost weight with methanol, mix well and filter. Discard the initial filtrate, and use the successive filtrate as the test solution.

Procedure Inject accurately 10 μl of each of the reference solution and the test solution separately into the column and calculate the content.

It contains not less than 0.50 mg of 2,3,5,4'-tetrahydroxystilbene-2-O-β-D-glucoside ($C_{20}H_{22}O_9$) per tablet, referred to Radix Polygoni Multiflori Praeparata Cum Succo Glycines Sotae.

Action To resolve turbidity and lower blood lipids, and moisten the intestines to promote bowel movements.

Indications Hyperlipemia due to phlegm accumulation with manifestations of heaviness of the head, lethargy and dry stools.

Usage and dosage 4-5 tablets, 3 times a day.

Strength 0.3 g per tablet

Storage Tightly closed.

Xuezhining Wan
(血脂宁丸)

Xuezhining Pills

Ingredients Semen Cassiae; Fructus Crataegi; Folium Nelumbinis; Radix Polygoni Multiflori Preparata Cum Succo Glycines Sotae.

Procedure Pulverize the above four ingredients to fine powder, sift and mix with a quantity of refined sugar powder thoroughly. To each 100 g of the powder add 70-90 g of refined honey to make big honeyed pills.

Description Deep brown big honeyed pills; taste, sweet and sour.

Identification Triturate well 9 g of the pills, cut into pieces, with 4 g of kieselguhr, add 30 ml of methanol, ultrasonicate for 30 minutes and filter. Evaporate the filtrate to dryness, dissolve the residue in 10 ml of a 0.5% solution of sodium hydroxide and filter. Acidify the filtrate with hydrochloric acid, extract with two 15-ml quantities of ethyl acetate. Combine the extracts and evaporate to dryness. Dissolve the residue in 1 ml of ethyl acetate as the test solution. To 2 g of Radix Polygoni Multiflori reference drug add 30 ml of chloroform, ultrasonicate for 15 minutes, filter and evaporate the filtrate to dryness. Dissolve the residue in 1 ml of ethyl acetate as the reference drug solution. Dissolve ursolic acid CRS in ethyl acetate to produce a solution containing 1 mg per ml as the reference solution. Carry out the method for thin layer chromatography (Appendix Ⅵ B), using silica gel G as the coating substance prepared with a 0.5% solution of sodium hydroxide and a mixture of toluene, ethyl acetate and formic acid (15 : 2 : 1) as the mobile phase. Apply separately to the plate 4 μl of the test solution and 1 μl of each of the reference drug solution and reference solution. After developing and removal of the plate, dry in air and examine under ultraviolet light at 365 nm. The orange fluorescent spots in the chromatogram obtained with the test solution correspond in position and colour to the spots in the chromatogram obtained with the reference drug solution. Then spray with a 10% solution of sulfuric acid in ethanol, heat at 105℃ for several minutes. The purplish-red spot in the chromatogram obtained with the test solution corresponds in position and colour to the spot in the chromatogram obtained with the reference solution.

Other requirements Comply with the general requirements for pills (Appendix Ⅰ A).

Assay Weigh accurately 2 g of the pills, obtained in the test of weight variation, cut into pieces and mix well, add 30 ml of methanol in a conical flask, ultrasonicate for 60 minutes, filter, ultrasonicate the drug residue and the filter paper with 30 ml of methanol for 30 minutes, filter and wash the drug residue with 20 ml of methanol. Evaporate the mixture of combined filtrates and washing to dryness on a water bath, dissolve the residue in methanol and transfer to a 10 ml volumetric flask. Dilute with methanol to volume, mix well and use the solution as the test solution. Dissolve a quantity of ursolic acid CRS, weigh accurately, in methanol to produce a solution containing 0.1 mg per ml as the reference solution. Carry out the method for thin layer chromatography (Appendix Ⅵ B), using silica gel G as the coating substance and a mixture of chloroform and methanol (20 : 0.5) as the mobile phase. Apply accurately 2 μl of the test solution, 2

μl and 4 μl of the reference solution to the plate, separately. After developing and removal of the plate, dry in air, spray with a 10% solution of sulfuric acid in ethanol and heat at 105℃ to the spots clear. Cover the plate with a same size glass and fix with a adhesive tape. Carry out the method for thin layer chromatography (Appendix Ⅵ B, thin layer chromatographic scanning method), scan at wavelength of λ_S=540 nm and λ_R=420 nm, measure the integration values of absorbance of the test solution and the reference solution, and calculate.

It contains not less than 4.5 mg per pill of ursolic acid ($C_{30}H_{48}O_3$), referred to Fructus Crataegi.

Action To resolve turbidity and lower blood lipids, and moisten the intestines to promote bowels movement.

Indications Hyperlipemia due to blockage of the lung by phlegm with manifestations of dizziness, constriction in the chest and dry stools.

Usage and dosage 2 pills, 2-3 times a day.

Precaution It is forbidden to prescribe to patients with severe gastric ulcer and hyperhydrochloria or cautious about them.

Strength 9 g per pill

Storage Preserve in tightly closed containers.

Xuhan Weitong Keli (虚寒胃痛颗粒)

Xuhan Weitong Granules

Ingredients Radix Astragali Praeparata Cum Melle; Radix Et Rhizoma Glycyrrhizae Praeparata Cum Melle; Ramulus Cinnamomi; Radix Codonopsis; Radix Paeoniae Alba; Rhizoma Alpiniae Officinarum; Fructus Jujubae; Rhizoma Zingiberis.

Procedure Isolate the volatile oil form Rhizoma Alpiniae Officinarum and Rhizoma Zingiberis by distillation, and collect the aqueous extract solution in another container. Decoct the other 6 ingredients with water for 2 times, 2 hours for the first time and 1 hour for the second time. Combine the decoctions, filter, combine the filtrate and the above aqueous extract solution, concentrate to a thin extract with a relative density of 1.04-1.08 (50℃), add three quantities of ethanol, stand for 24 hours. Separate the supernatant, recover the ethanol and concentrate to form a thin extract with a relative density of 1.18-1.22 (50℃). To the extract, add a quantity of sucrose and dextrin to make granules, dry, allow to cool, spray with the volatile, mix well, make to 1000 g of granules, or to the extract, add a quantity of dextrin to make granules, dry, allow to cool, spray with the volatile, mix well, make to 600 g of granules (without sucrose).

Description Pale brownish-yellow to brownish-yellow granules; taste, pungent and sweet.

Identification (1) Pulverize 15 g of the granules or 9 g of the granules (without sucrose), dissolve the above power in 40 ml of water. Extract with two 40-ml quantities of ether, discard the ether extract. Extract the water layer with two 40-ml quantities of *n*-butanol saturated with water, combine the *n*-butanol extract and wash with two 40-ml of 0.5% solution of sodium hydroxide and wash with water to neutral. Evaporate the n-butanol extract to dryness, and dissolve the residue in 1 ml of methanol as the test solution. Dissolve a quantity of Astragaloside Ⅳ CRS in methanol to prepare a solution containing 1 mg per ml as the reference solution. Carry out the method for thin layer chromatography (Appendix Ⅵ B), using silica gel G as the coating substance and the lower layer of a mixture of chloroform, ethyl acetate, methanol and water (15 : 40 : 22 : 10), standing below 10℃, as the mobile phase. Apply separately 10 μl of each of the test solution and 2 μl of the reference solution to the plate. After developing and removal of the plate, dry in air. Spray with 10% sulfuric acid in ethanol, and heat at 105℃ to the spots clear. Examine in daylight, the spot in the chromatogram obtained with the test solution corresponds in position and colour to the spot in the chromatogram obtained with the reference solution. Examine under ultraviolet light at 365 nm, the orange fluorescent spot with the test solution corresponds in position and colour to the spot in the chromatogram obtained with the reference solution.

(2) Disslove 15 g of the granules or 9 g of the granules (without sucrose) in 40 ml of water, centrifuge, extract the supernatant with two 20-ml quantities of *n*-butanol. Combine the *n*-butanol extract and evaporate to dryness, and dissolve the residue in 1 ml of ethanol as the test solution. Dissolve a quantity of paeoniflorin CRS in ethanol to prepare a solution containing 2 mg per ml as the reference solution. Carry out the method for thin layer chromatography (Appendix Ⅵ B), using silica gel G as the coating substance and a mixture of chloroform and methanol (4 : 1) as the mobile phase. Apply separately 10 μl of each of the above two solutions to the plate. After developing and removal of the plate, dry in air. Spray with 5% vanillin in sulfuric, and heat at 105℃ to the spot clear. The spot in the chromatogram obtained with the test solution corresponds in position and colour to the spot in the chromatogram obtained with the reference solution.

(3) Pulverize 20 g of the granules or 12 g of the granules (without sugar), ultrasonicate for 15 minutes with 50 ml of ether and filter. Dehydrate the filtrate with 1 g of anhydrous sodium sulfate and filter, evaporate the filtrate to dryness, dissolve the residue in 1 ml of absolute ethanol as the test solution. Dissolve a quantity of cinnamic acid CRS in absolute ethanol to prepare a solution containing 1 mg per ml as the reference solution. Carry out the method for thin layer chromatography (Appendix Ⅵ B), using silica gel GF_{254} mixed with sodium carboxymethyl cellulose as the coating substance and a mixture of n-hexane, ether and glacial acetic acid (5 : 5 : 0.1) as the mobile phase. Apply separately 15 μl of the test solution and 10 μl of the reference solution to the plate. After developing and removal of the plate, dry in air. Examine under ultraviolet light at 254 nm. The dark purple spot in the chromatogram obtained with the test solution corresponds in position and colour to the spot in the chromatogram obtained with the reference solution.

Other requirements Comply with the general requirements for granules (Appendix Ⅰ C).

Assay Carry out the method for high performance liquid chromatography (Appendix Ⅵ D).

Chromatographic system and system suitability Use octadecylsilane bonded silica gel as the stationary phase and a mixture of methanol and 0.02 mol/L solution of potassium dihydrogen phosphate (28 : 72) as the mobile phase. As detector a spectrophotometer set at 230 nm. The number of the theoretical plates of the column is not less than 4000, calculated with the reference to the peak of paeoniflorin.

Reference solution Dissolve a quantity of paeoniflorin CRS, weigh accurately, in methanol to prepare a solution containing 50 μg per ml.

Test solution Pulverize granules, obtained under the test of packing variation, to fine powder. Weigh accurately 1 g of

the powder of granules or 0.6 g of the powder of granules (without sugar), place to a 100 ml volumetric flask and add 80 ml of water. Ultrasonicate (power 250 W, frequency 33 kHz) for 30 minutes, allow to cool, dilute with water to volume, and mix well. Filter and use the successive filtrate as the test solution.

Procedure Inject accurately 10 μl of each of the reference solution and the test solution into the column, and calculate the content.
It contains not less than 8.0 mg of paeoniflorin ($C_{23}H_{28}O_{11}$) per pack, referred to Radix Paeoniae Alba.

Action To replenish *qi* to invigorate the spleen, and warm the stomach to kill pain.

Indications Stomachache due to *deficiency* in the spleen and *stomach* with manifestations of dull pain in the stomach, alleviated with warmth and pressure, or getting worse with cold or an empty stomach; duodenal bulbar ulcer, atrophic gastritis with above symptoms.

Usage and dosage 1 pack, 3 times a day. Taken with boiled water.

Strength (1) 5 g per pack (2) 3 g per pack (without sucrose)

Storage Preserve in tightly closed containers.

Yajiao Hadun San (雅叫哈顿散)

Yajiao Hadun Powder

Yajiao Hadun Powder is a prescription used by the Dai Nationality.

Ingredients Radix Asparagi Pseudofilicini 100 g; Radix Streptocauli 100 g; Fructus Benincasae 100 g; Rhizoma Taccae 100 g; Radix Inulae Cappae 100 g; Herba Viticis 100 g.

Procedure Pulverize the above six ingredients to very fine powders, sift and mix well.

Description A dark grey powder; odour, slightly aromatic; taste, slightly bitter.

Identification Microscopical: Needle crystals of calcium oxalate 40-60 μm long. Starch granules subrounded, cuculliform, 5-25 μm in diameter, hilum 1-shaped, V-shaped, or cracked. Compound granules composed of 2-3 components. Fragments of exocarp with cyclocytic stomata, subsidiary cells 4-5. Stone cells colourless or yellow, subrectangular, 20-25 μm in diameter, walls thickened, lignified, and distinctly pitted. Non-glandular hairs 2-5 celled, 45-175 μm long, with warty walls; glandular hairs 27-65 μm long, with a 1-2-celled head, containing yellow secretion, and a 1-2-celled stalk.

Other requirements Comply with the general requirements for powders (Appendix I B).

Action To remove toxic *heat*, alleviate pain, and arrest bleeding.

Indications Common colds with fever, laryngitis; distending pain in the chest and abdomen; palpitation in consumptive diseases; menstrual disorders, postpartum hemorrhage.

Usage and dosage 3-9 g, 3 times a day.

Storage Preserve in tightly closed containers.

Yangdan Wan (羊胆丸)

Yangdan Pills

Ingredients Extractum Fellis Ovisis Siccum 53 g; Radix Stemonae 150 g; Rhizoma Bletillae 200 g; Bulbus Fritillariae Thunbergii 100 g; Radix et Rhizoma Glycyrrhizae 60 g.

Procedure Pulverize Radix et Rhizoma Glycyrrhizae and Rhizoma Bletillae to fine powder respectively. Pulverize the other three ingredients to fine powder, sift, mix thoroughly, reserve a small portion for lubricating in processing and mix thoroughly the other portion with the powder of Rhizoma Bletillae. Make pills with water and coat with the powder of Radix et Rhizoma Glycyrrhizae and dry.

Description Greyish-yellow watered pills; odour, slightly stinking; taste, sweet and bitter.

Identification (1) Microscopical: Starch granules ovoid, 35-48 μm in diameter, hilum pointed, V-shaped or U-shaped, situated at the narrow end, striations minute and dense. Raphides of calcium oxalate 27-88 μm long. Fibre bundles surrounded by parenchymatous cells containing

prisms of calcium oxalate, forming crystal fibres. Wood parenchymatous cells surrounding vessels subrectangular, with slightly thickened and relatively large rounded pitted walls.
(2) To a small quantity, in powder, add 2 drops of sulfuric acid, and 1 drop of water successively, a rose-red colour is produced.

Other requirements Comply with the general requirements for pills except disintegration (Appendix Ⅰ A).

Action To relieve coughing, resolve phlegm, and arrest bleeding.

Indications Coughing with phlegm or bloody sputum due to blockage of the lung by *phlegm-fire*; whooping cough with above symptoms.

Usage and dosage 3 g, 3 times a day.

Storage Preserve in tightly closed containers, protected from moisture.

Yanghe Jiening Gao (阳和解凝膏)

Yanghe Jiening Plaster

Ingredients Herba Arctii Recence 480 g (or Herba Arctii 120 g); Caulis Impatientis Balsaminae Recence 40 g (or Caulis Impatientis 10 g); Radix Aconiti 20 g; Ramulus Cinnamomi 20 g; Radix et Rhizoma Rhei 20 g; Radix Angelicae Sinensis 20 g; Radix Aconiti Kusnezoffii 20 g; Radix Aconiti Lateralis 20 g; Pheretima 20 g; Bombyx Batryticatus 20 g; Radix Paeoniae Rubra 20 g; Radix Angelicae Dahuricae 20 g; Radix Ampelopsis 20 g; Rhizoma Bletillae 20 g; Rhizoma Chuanxiong 10 g; Radix Dipsaci 10 g; Radix Saposhnikoviae 10 g; Herba Schizonepetae 10 g; Faeces Trogopterori 10 g; Radix Aucklandiae 10 g; Fructus Citri 10 g; Pericarpium Citri Reticulatae 10 g; Cortex Cinnamomi 20 g; Olibanum 20 g; Myrrha 20 g; Styrax 40 g; Moschus 10 g.

Procedure Pulverize Cortex Cinnamomi, Olibanum and Myrrha to fine powder, triturate with Moschus, sift and mix thoroughly. Crash properly all the other ingredients except Styrax, place together with 2400 g of edible vegetable oil in a pot and fry to drying up. Discard the residue, filter and refine until the oil becomes pearl form when droping. Add 750-1050 g of minium to the oil, stir thoroughly, collect the plaster and soak into water. Melt the plaster over gentle flame, add Styrax and the above fine powder, stir well and spread on the pieces of paper in suitable size.

Description A black plaster spread on paper.

Other requirements Comply with the general requirements for plasters (Appendix Ⅰ P).

Action To warm *yang* to resolve *dampness*, reduce swelling and disintegrate nodulations.

Indications Abcesses due to *cold* and phlegm retention, scrofula without ulceration or pain caused by obstruction of *qi* and cold-dampness due to a deficiency of *yang* of the spleen and *kidney*, and retention of *phlegm* and stasis stagnation.

Usage and dosage Softened by heating and applied topically.

Strength Net weight per piece: (1) 1.5 g (2) 3 g (3) 6 g (4) 9 g

Storage Preserve in tightly closed containers, stored in a cool and dry place.

Yangshen Baofei Wan (洋参保肺丸)

Yangshen Baofei Pills

Ingredients Pericarpium Papaveris 120 g; Fructus Schisandrae Chinesis (stir-baked with vinegar) 30 g; Bulbus Fritillariae Cirrhosae 60 g; Pericarpium Citri Reticulatae 60 g; Fructus Amomi 30 g; Fructus Aurantii Immaturus 60 g; Herba Ephedrae 30 g; Semen Armeniacae Amarum 60 g; Gypsum Fibrosum 30 g; Radix et Rhizoma Glycyrrhizae 60 g; Radix Scrophulariae 60 g; Pulvis Radix Panacis Quinquefolii 45 g.

Procedure Pulverize the above ingredients except Pulvis Radix Panacis Quinquefolii to fine powder, sift and mix thoroughly, and triturate with Pulvis Radicis Panacis Quinquefolii thoroughly and sift. To each 100 g of the powder add 120-130 g of refined honey to make big honeyed pills.

Description Blackish-brown big honeyed pills; taste, sweet, slightly bitter.

Indentification (1) Microscopical: Stone cells of epidermis of testa pale yellowish-brown, subpolygonal in surface view, walls thickened with very fine and closed pits, lumina containing dark brown substances. Sclerenchy matous cell of endopleura yellowish-brown or brownish-red, subpolygonal in surface view, walls thickened, lumina containing a silica body. Stomata special, guard cells dumbbell-like in lateral view. Irregular plate crystals colourless with straight striations. Fibre bundles surrounded by parenchymatous cells containing prisms of calcium oxalate, forming crystal fibres. Stone cells yellowish-brown or colourless, subrectangular, subrounded or irregular, striation well-defined, up to 94 μm in diameter.
(2) Heat under reflux 2 pills, cut into pieces and ground with 6 g of kieselguhr, with 50 ml of chloroform and 2 ml of concentrated ammonia TS, for 30 minutes. Filter and evaporate the filtrate to dryness, dissolve the residue in 0.5 ml of methanol as the test solution. Prepare a solution of 1 g of Pericarpium Papaveris reference drug in the same manner as the reference drug solution. Carry out the method for thin layer chromatography (Appendix Ⅵ B), using silica gel G as the coating substance mixed with 2% solution of sodium hydroxide solution, and a mixture of toluene, acetone, dehydrated ethanol and concentrated ammonia TS (20 : 20 : 3 : 1) as the mobile phase. Apply separately to the plate 10 μl of each of the two solutions. After developing and removal of the plate, dry in air, spray with dilute potassium iodobismuthate TS and alcoholic sodium nitrite TS successively. The spots in the chromatogram obtained with the test solution correspond in position and colour to the spots in the chromatogram obtained with the reference drug solution.
(3) Pulverize 4 pills, cut into pieces, with 12 g of kieselguhr, add 5 ml of concentrated ammonia TS and 50 ml of chloroform, heat under reflux for 1 hour and stand to cool. Filter and extract the filtrate with two 20-ml quantities of 0.1 mol/L solution of hydrochloric acid. Combine the extract, adjust to pH 10 with concentrated ammonia TS, extract with two 20-ml quantities of chloroform, combine the chloroform extract, and evaporate to dryness. Dissolve the residue in 0.5 ml of ethanol as the test solution. To 2 g of Bulbus Fritillariae Cirrhosae reference drug, add 1 ml of concentrated ammonia TS and 30 ml of chloroform, prepare in the same manner as the reference drug solution. Carry out the method for thin layer chromatography (Appendix Ⅵ B),

using silica gel G as the coating substance and a mixture of *n*-hexane, ethyl acetate and diethylamine (12 : 10 : 1) as the mobile phase. Apply separately 10 μl of the test solution and 5 μl of the reference drug solution to the plate. After developing and removal of the plate, dry in air and spray with dilute potassium iodobismuthate TS and alcoholic sodium nitrite TS. The spots in the chromatogram obtained with the test solution correspond in position and colour to the spots in the chromatogram obtained with the reference drug solution.

(4) Pulverize 1 pills, cut into pieces, with 3 g of kieselguhr, add 30 ml of methanol, and ultrasonicate for 30 minutes. Filter and evaporate the filtrate to dryness. Dissolve the residue with a quantities of water, apply to a column of polyamide (60-80 mesh, 3 g, 1.0 cm in diameter), wash with 50 ml of water, and elute with 50 ml of methanol. Collect the eluate, and evaporate to dryness. Dissolve the residue in 1 ml of ethanol as the test solution. Dissolve a quantity of hesperidin CRS in methanol to prepare a saturated solution as the reference solution. Carry out the method for thin layer chromatography (Appendix Ⅵ B), using silica gel G as the coating substance and a mixture of ethyl acetate, methanol and water (100 : 17 : 13) as the mobile phase. Apply separately 2 μl of the test solution and 10 μl of the reference solution to the plate. After developing for about 3 cm and removal of the plate, dry in air. Use the upper layer of a mixture of toluene, ethyl acetate, formic acid and water (20 : 10 : 1 : 1) as the mobile phase, after developing again for about 8 cm and removal of the plate, dry in air, spray with aluminium chloride TS, and examine under ultraviolet light at 365 nm. The fluorescent spot in the chromatogram obtained with the test solution corresponds in position and colour to the spot in the chromatogram obtained with the reference solution.

(5) Dissolve a quantity of ephedrine hydrochloride CRS in ethanol to prepare a solution containing 1 mg per ml as the reference solution. Carry out the method for thin layer chromatography (Appendix Ⅵ B), using silica gel G as the coating substance and a mixture of chloroform, methanol and concentrated ammonia TS (4 : 1 : 0.1) as the mobile phase. Apply separately 2 μl of the reference solution and 10-20 μl of the test solution obtained under Identification (3) to the plate. After developing and removal of the plate, dry in air and spray with ninhydrin TS and heat at 105℃ to the spots clear. The spot in the chromatogram obtained with the test solution corresponds in position and colour to the spot in the chromatogram obtained with the reference solution.

(6) Pulverize one and half pills, cut into pieces, with 4.5 g of kieselguhr, add 50 ml of chloroform, heat under reflux for 1 hour and stand to cool. Discard the chloroform extract and expel solvent of the residue. Heat under reflux the drug residue with 50 ml of methanol for 1 hour, stand to cool, filter and evaporate to dryness. Dissolve the residue with 20 ml of water, extract with three 20-ml quantities of *n*-butanol saturated with water, combine the extract, wash with two 20-ml quantities of 0.1 mol/L solution of sodium hydroxide, and wash again with 20 ml of water saturated with *n*-butanol. Evaporate *n*-butanol extract, dissolve the residue in 1 ml of methanol as the test solution. Prepare a solution of 0.5 g of Radix Panacis Quinquefolii reference drug and 30 ml of chloroform in the same manner as the reference drug solution. Dissolve a quantity of pseuoginsenoside F_{11} CRS, Ginsenoside R_{b1} CRS, Ginsenoside Re CRS and Ginsenoside Rgl CRS with methanol to prepare a mixture containing 1 mg of each per ml as the reference solution. Carry out the method for thin layer chromatography (Appendix Ⅵ B), using high performance silica gel plate and the upper layer of a mixture of chloroform, ethyl acetate, methanol and water (15 : 40 : 22 : 10, standing for 12 hours at 5-10℃) as the mobile phase. Apply separately 2 μl of the above three solutions to the plate. After developing and removal of the plate, dry in air and spray with 10% sulfuric acid in ethanol, heat at 105℃ to the spots clear. Examine in daylight, the spots in the chromatogram obtained with the test solution correspond in position and colour to the spots in the chromatogram obtained with the reference drug solution and the reference solution. Examine under ultraviolet light at 365 nm, the fluorescent spots obtained with test solution correspond to the spots obtained with the reference drug solution and the reference solution.

Other requirements Comply with the general requirements for pills (Appendix Ⅰ A).

Action To nourish *yin* and reinforce the lung, and relieve coughing panting.

Indications Coughing and panting due to phlegm, constriction in the chest and shortness of breath, dry mouth and throat and insomnia.

Usage and dosage 2 pills, 2-3 times a day.

Precaution Contraindicated for patients with coughin common colds.

Strength 6 g per pill

Storage Preserve in tightly closed containers.

Yangxin Dingji Gao (养心定悸膏)

Yangxin Dingji Concentrated Decoction

Ingredients Radix Rehmanniae 120 g; Radix Ophiopogonis 60 g; Radix et Rhizoma Ginseng Rubra 20 g; Fructus Jujubae 60 g; Colla Corii Asini 20 g; Semen Sesami Nigrum 50 g; Ramulus Cinnamomi 30 g; Rhizoma Zingiberis Recens 30 g; Radix et Rhizoma Glycyrrhizae Praeparata 40 g.

Procedure Cut Radix Ginseng Rubra into slices, macerate in warm water for 1 hour, decoct for 2 times, 2 hours each, combine the decoctions, and filter. Press Rhizoma Zingiberis Recens to obtain the juice. Extract volatile oil from Ramulus Cinnamomi. Decoct the other ingredients, except Colla Corii Asini, and the residues of Radix Ginseng Rubra, Rhizoma Zingiberis Recens and Ramulus Cinnamomi with water for 2 times, 2 hours each, combine the decoctions, filter, add the extract of Radix Ginseng Rubra to the filtrate, concentrate to produce a thick extract, dissolve Colla Corii Asini in 30 g of yellow rice wine. Make 120 g of sucrose into syrup and add the syrup together with the dissolved Colla Corii Asini and 20 g of refined honey to the above thick extract, continue to concentrate to an appropriate thick extract, cool, add juice of Rhizoma Zingiberis Recens and volatile oil of Ramulus Cinnamomi, mix well, and make to about 300 g of concentrated decoction.

Description A brown, viscous and thick liquid; odour, aromatic; taste, sweet.

Identification (1) To 10 ml add 10 ml of water, mix well, saturate with sodium chloride and extract with 15 ml of ether. Transfer the ether layer to a white porcelain dish, evaporate to dryness, add several drops of 0.5% vanillin in sulfuric acid; a purplish-red colour is produced.

(2) To 10 ml add 5 ml of water, mix well, extract with 10 ml of *n*-butanol, evaporate the *n*-butanol extract to dryness on a water bath, and dissolve the residue in 1 ml of chloroform. Transfer the chloroform solution to a test tube,

add 0.5 ml of sulfuric acid along the tube wall; a red ring is produced at the conjunction of the two liquids.

Relative density 1.08-1.10 (Appendix Ⅶ A), using 10 g, dilute with 20 ml of water.

Other requirements Comply with the general requirements for concentrated decoction (Appendix Ⅰ F).

Assay Weigh accurately 3 g, carry out the method for determination of nitrogen (Appendix Ⅸ L, method 1). The total nitrogen content is not less than 1.0 per cent.

Action To nourish blood and *qi*, and restore normal pulse to cure palpitation.

Indications Palpitation and shortness of breath, arrhythmia, night sweating, insomnia, dry throat and tongue and constipation due to a deficiency of *qi* and blood.

Usage and dosage 15-20 g, twice a day.

Precaution Contraindicated for patients with abdominal bloating, loose stools, poor appetite and greasy fur.

Storage Preserve in tightly closed containers, stored in a cool place.

Yangxue Shengfa Jiaonang (养血生发胶囊)

Yangxue Shengfa Capsules

Ingredients Radix Rehmanniae Praeparata; Radix Angelicae Sinensis; Rhizoma et Radix Notopterygii; Fructus Chaenomelis; Rhizoma Chuanxiong; Radix Paeoniae Alba; Semen Cuscutae; Rhizoma Gastrodiae; Radix Polygoni Multiflori Praeparata.

Procedure Pulverize Radix Angelicae Sinensis, Rhizoma et Radix Notopterygii, Rhizoma Chuanxiong, Radix Polygoni Multiflori Praeparata and Rhizoma Gastrodiae to fine powder; decoct the other four ingredients with water for three times, 2 hours each for the first and the second time and 1 hour for the third time, combine the decoctions and filter; concentrate the filtrate to a quantity, mix thoroughly with the above powder and make granules, dry, sift and pack into capsules.

Description Capsules, containing dark brown granule and powder; taste, pungent, slightly bitter.

Identification (1) Macerate 4 g of the contents in 20 ml of methanol overnight, filter, evaporate the filtrate to dryness on a water bath and dissolve the residue in 5 ml of 5% solution of sodium hydroxide. Transfer to a separator, acidify with hydrochloric acid, extract with 10 ml of ethyl acetate, separate the ethyl acetate solution and use it as the test solution. Prepare a solution of 2 g of Radix Polygoni Multiflori reference drug in the same manner as the reference drug solution. Carry out the method for thin layer chromatography (Appendix Ⅵ B), using silica gel G as the coating substance mixed with 0.5% sodium hydroxide solution and a mixture of toluene, ethyl acetate and formic acid (15 : 2 : 1) as the mobile phase. Apply separately to the plate 5 μl of each of the two solutions. After developing and removal of the plate, dry in air, and examine under ultraviolet light at 365 nm. The orange fluorescent spots in the chromatogram obtained with the test solution correspond in position and colour to the spots in the chromatogram obtained with the reference drug solution. The spots turn to red on exposure to ammonia vapour.

(2) Ultrasonicate 10 g of the content with 50 ml of ethanol for 30 minutes, filter, evaporate the filtrate to dryness, dissolve the residue with 3 ml of ethanol, apply to a column packed with macroporous absorption resins D101 (1 cm in diameter and 15 cm high), wash with 40 ml of water, and elute with 40 ml of 40% ethanol. Collect the eluate, evaporate to dryness, and dissolve the residue with 1 ml of ethanol as the test solution. Dissolve a quantity of paeoniflorin CRS in ethanol to prepare a solution containing 1 mg per ml as the reference solution. Carry out the method for thin layer chromatography (Appendix Ⅵ B), using silica gel G as the coating substance and a mixture of chloroform, ethyl acetate, methanol and formic acid (40 : 5 : 10 : 0.2) as the mobile phase. Apply separately 6 μl of each of the two solutions to the plate. After developing and removal of the plate, dry in air, spray with 5% vanillin in sulfuric acid, heat at 105℃ to spots clear. The spot in the chromatogram obtained with the test solution corresponds in position and colour to the spot in the chromatogram obtained with the reference solution.

(3) Macerate 5 g of the content with 30 ml of ether for 1 hour, filter, evaporate the filtrate to dryness, and dissolve the residue with 1 ml of methanol as the test solution. Prepare a solution of 1 g of Rhizoma Chuanxiong reference drug and 10 ml of ether in the same manner as the reference drug solution. Carry out the method for thin layer chromatography (Appendix Ⅵ B), using silica gel G as the coating substance and a mixture of *n*-hexane and ethyl acetate (9 : 1) as the mobile phase. Apply separately 4 μl of the test solution and 2 μl of the reference drug solution to the plate. After developing and removal of the plate, dry in air, and examine under ultraviolet light at 365 nm. The fluorescent spots in the chromatogram obtained with the test solution correspond in position and colour to the spots in the chromatogram obtained with the reference drug solution.

Other requirements Comply with the general requirements for capsules (Appendix Ⅰ L).

Assay Carry out the method for high performance liquid chromatography (Appendix Ⅵ D).

Chromatographic system and system suitability Use octadecylsilane bonded silica gel as the stationary phase and a mixture of acetonitrile and water (19 : 81) as the mobile phase. As detector a spectrophotometer set at 320 nm. The number of theoretical plates of the column is not less than 2000, calculated with the reference to the peak of 2, 3, 5, 4′-tetrahedroxystilbene-2-O-β-D-glucoside.

Reference solution Dissolve a quantity of 2, 3, 5, 4′-tetrahedroxystilbene-2-O-β-D-glucoside CRS, in dilute ethanol TS to prepare a solution containing 50 μg per ml.

Test solution Mix thoroughly the contents obtained under the test of weight variation, weigh accurately 1 g in a stopper conical flask, add accurately 50 ml of dilute ethanol, and weigh. Heat under reflux for 30 minutes, stand to cool, replenish the lost weight with dilute ethanol, and mix well. Filter, and use the successive filtrate as the test solution.

Procedure Inject accurately 10 μl of the reference solution and 5-10 μl of the test solution into the column, and calculate the content.

It contains not less than 1.1 mg of 2, 3, 5, 4′-tetrahedroxystilbene-2-O-β-D-glucoside ($C_{20}H_{22}O_9$) per capsule, referred to Radix Polygoni Multiflori Praeparata.

Action To nourish blood and expel *wind*, and reinforce the kidney and replenish essence.

Indications Alopecia areata and alopecia seborrhoeica due to a deficiency of blood and excess of *wind*, as well as a deficiency of *kidney-essence*, with manifestations of loss of hair patch by patch, or baldness, local exposure of scalp, loose hair around the area of baldness or sparse loss of hair,

trichoxerosis or liparotrichia, itching of scalp; Alopecia areata, baldness and alopecia seborrheica with above symptoms.

Usage and dosage 4 capsules, twice a day.

Strength 0.5 g per capsule

Storage Preserve in tightly closed containers.

Yangyin Qingfei Gao (养阴清肺膏)

Yangyin Qingfei Concentrated Decoction

Ingredients Radix Rehmanniae 100 g; Radix Ophiopogonis 60 g; Radix Scrophulariae 80 g; Bulbus Fritillariae Cirrhosae 40 g; Radix Paeoniae Alba 40 g; Cortex Moutan 40 g; Herba Menthae 25 g; Radix et Rhizoma Glycyrrhizae 20 g.

Procedure Carry out the method for percolation described under extracts and liquid extracts (Appendix Ⅰ O), percolate Bulbus Fritillariae Cirrhosae with 70% ethanol, macerate for 18 hours, collect the percolated solution at the speed of 1-3 ml per minute until the soluble matter is percolated completely, then recover the ethanol. Distil Cortex Moutan and Herba Menthae with steam, collect the distillate, separate the volatile oil and preserve in other container. To the drug residue and another five ingredients, add water and decoct twice, each for 2 hours, combine the decoctions, allow to stand and filter. Combine the filtrate with extract of Bulbus Fritillariae Cirrhosae, concentrate to an appropriate quantity, add 500 g of refined honey, mix well and filter. Concentrate the filtrate to a specified relative density, allow to cool, add the solution of volatile oil of Cortex Moutan and Herba Menthae, mix well.

Description A dark brown and thick semi-fluid; odour, aromatic; taste, sweet with a sensation of cool.

Identification (1) Take about 2 g of the decoctions to a 100 ml beaker, add 10 ml of water, stir well, cover a piece of filter paper, previously moistened with water, on the mouth of the beaker and add a small quantity of mixed powder containing 1 portion of 2,6-dichloro-quinone-chlorimide and 32 portions of sodium tetraborate on the filter paper. Cover it with a watch glass and boil gently then stop heating, a blue colour is shown on the filter paper.

(2) Measure 25 ml of the decoctions to a stoppered conical flask, add 4 ml of the mixture of 1 mol/L solution of hydrochloric acid and methanol (3 : 1), mix well and macerate for 1 hour. Transfer to a separator, extract with successive quantities of 30 ml, 15 ml and 15 ml of chloroform, combine the chloroform extracts, recover chloroform to dryness in vacuum. Dissolve the residue in 1 ml of ethanol as the test solution. Dissolve a quantity of paeonol CRS in ethanol to prepare a solution containing 1 mg per ml as the reference solution. Carry out the method for thin layer chromatography (Appendix Ⅵ B), using silica gel G as the coating substance, and a mixture of cyclohexane and ethyl acetate (3 : 1) as the mobile phase. Apply separately to the plate 4 μl of each of the two solutions. After developing and removal of the plate, dry in air, spray with 5% ferric chloride in ethanol acidified with hydrochloric acid. The spot in the chromatogram obtained with the test solution corresponds in position and colour to the spot in the chromatogram obtained with the reference solution.

(3) Ultrasonicate 10 ml of the decoction with 50 ml of methanol for 30 minutes, filter, evaporate the filtrate to dryness, dissolve the residue with 100 ml of water, apply to a column packed with GDX-201 macroporous absorption resins (60-80 mesh, 1 cm in diameter and 12 cm high), wash with 50 ml of 5% methanol, and elute with 50 ml of 35% methanol. Collect the eluate, evaporate to dryness, and dissolve the residue with 2 ml of methanol as the test solution. Dissolve a quantity of paeoniflorin CRS in methanol to prepare a solution containing 1 mg per ml as the reference solution. Carry out the method for thin layer chromatography (Appendix Ⅵ B), using silica gel G as the coating substance and a mixture of chloroform, ethyl acetate, methanol and formic acid (40 : 5 : 10 : 0.2) as the mobile phase. Apply separately 4 μl of each of the two solutions to the plate. After developing and removal of the plate, dry in air, spray with 10% sulfuric acid in ethanol, heat at 105℃ to spots clear. The spot in the chromatogram obtained with the test solution corresponds in position and colour to the spots in the chromatogram obtained with the reference solution.

Relative density Not less than 1.37 (Appendix Ⅶ A).

Other requirements Comply with the general requirements for concentrated decoctions (Appendix Ⅰ F).

Action To nourish *yin* to relieve dryness by moistening, and clear *lung-heat* to cure sore throat.

Indications Dry and sore throat, dry cough with expectoration of scanty phlegm or blood-flecked phlegm due to *lung-dryness* from *yin* deficiency.

Usage and dosage 10-20 ml, 2-3 times a day.

Storage Preserve in tightly closed containers, stored in a cool place.

Yangyin Qingfei Wan (养阴清肺丸)

Yangyin Qingfei Pills

Ingredients Rhizoma Rehmanniae 200 g; Radix Ophiopogonis 120 g; Radix Scrophulariae 200 g; Bulbus Fritillariae Cirrhosae 80 g; Radix Paeoniae Alba 80 g; Cortex Moutan 80 g; Herba Menthae 50 g; Radix et Rhizoma Glycyrrhizae 40 g.

Procedure Pulverize the above eight ingredients to fine powder, sift and mix well. To each 100 g of the powder add 70-90 g of refined honey to make big honeyed pills.

Description Black big honeyed pills; taste, sweet and slightly bitter.

Identification (1) Microscopical: Fibre bundles surrounded by parenchymatous cells containing prisms of calcium oxalate, forming crystal fibres. Parenchyma grayish-brown to blackish-brown, cells mostly shrunken, and each containing a brown nucleus-like mass. Stone cells yellowish-brown or colourless, subrectangular, subround or irregular, about 94 μm in diameter. Needle crystals of calcium oxalate in bundles or scattered, 24-50 μm long, about 3 μm in diameter. Hesperidin crystals pale yellow, occurring in mesophyll tissues, especially abundant in palisade tissues.

(2) Cut 1 pill into pieces, ultrasonicate with 30 ml of methanol for 30 minutes, filter, and evaporate the filtrate to dryness at a lower temperature. Dissolve the residue in 30 ml of water, extract by shaking with two 20-ml quantities of ether, combine the ether extracts, evaporate to dryness, and dissolve the residue in 1 ml of methanol as the test solution. Dissolve a quantity of paeonol CRS in methanol to prepare a solution containing 1 mg per ml as the reference solution. Carry out the method for thin layer chromatography

(Appendix Ⅵ B), using silica gel G as the coating substance and a mixture of cyclohexane and ethyl acetate (13 : 2) as the mobile phrase. Apply separately to the plate 2 μl of each of the two solutions. After developing and removal of the plate, dry in air, spray with a 5% ferric chloride in ethanol acidified with hydrochloric acid and heat to the spots clear. The spot in the chromatogram obtained with the test solution corresponds in position and colour to the spot in chromatogram obtained with the reference solutions.
(3) Cut 1 pill into pieces, ultrasonicate with 40 ml of methanol for 40 minutes, and allow to cool. Filter, evaporate the filtrate to dryness, and dissolve the residue in 20 ml of 5% methanol. Apply the solution to a column packed with GDX-201 macroporous absorption resin (60-80 mesh, 1 cm in diameter, 12 cm high), elute with 50 ml of 5% methanol, discard the elute, then elute with 50 ml of 35% methanol, collect the eluate, evaporate to dryness, and dissolve the residue in 2 ml of methanol as the test solution. Dissolve a quantity of paeoniflorin CRS in methanol to prepare a solution containing 1 mg per ml as the reference solution. Carry out the method for thin layer chromatography (Appendix Ⅵ B), using silica gel G as the coating substance and a mixture of chloroform, ethyl acetate, methanol and formic acid (40 : 5 : 10 : 0.2) as the mobile phrase. Apply separately to the plate 4 μl of each of the two solutions. After developing and removal of the plate, dry in air, spray with 5% vanillin solution in sulfuric acid, and heat at 105℃ to the spots clear. The spot in the chromatogram obtained with the test solution corresponds in position and colour to the spot in chromatogram obtained with the reference solution.

Other requirements Comply with the general requirements for pills (Appendix Ⅰ A).

Assay Carry out the method for high performance liquid chromatography (Appendix Ⅵ D).

Chromatographic system and system suitability Use octadecylsiane bonded silica gel as the stationary phase and a mixture of acetonitrile, water and glacial acetic acid (33 : 67 : 2) as the mobile phase. As detector a spectrophotometer set at 274 nm. The number of theoretical plates of the column is not less than 3000, calculated with the reference to the peak of paeonol.

Reference solution Dissolve a quantity of paeonol CRS in methanol to prepare a solution containing 20 μg per ml as the reference solution.

Test solution Weigh accurately 1 g, obtained under the test of weight variation, cut into pieces and mixed well, add accurately 50 ml of methanol, stopper tightly, weigh, heat under reflux for 1 hour, allow to cool, weigh again, replenish the loss of weight with methanol, shake well, filter, and use the successive filtrate as the test solution.

Procedure Inject accurately 10 μl of each of the reference solution and the test solution into the column, respectively, and calculate the content.
It contains not less than 5.8 mg of paeonol ($C_9H_{10}O_3$) per pill, referred to Cortex Moutan.

Action To replenish *yin* and relieve *dryness* by moistening, and clear *lung-heat* to ease the throat.

Indications Dry and sore throat, dry cough with expectoration of scanty phlegm or blood-flecked phlegm due to *lung-dryness* from *yin* deficiency.

Usage and dosage 1 pill, twice a day.

Strength 9 g per pill

Storage Preserve in tightly closed containers.

Yao'aitiao
(药艾条)

Yao'ai Paper Strip-rolls

Ingredients Folium Artemisiae Argyi 20000 g; Ramulus Cinnamomi 1250 g; Rhizoma Alpiniae Officinarum 1250 g; Herba Pogostemonis 500 g; Lignum Dalbergiae Odoriferae 1750 g; Rhizoma Cyperi 500 g; Radix Angelicae Dahuricae 1000 g; Pericarpium Citri Reticulatae 500 g; Radix Salviae Miltiorrhizae 500 g; Radix Aconiti 750 g.

Procedure Triturate Folium Artemisiae Argyi to tiny pieces. Pulverize all the other ingredients to fine powder, sift and mix thoroughly. Spread homogeneously 20 g of the tiny pieces of Folium Artemisiae Argyi on a sheet of white cotton-paper of 28 cm in length and 15 cm in width and sprinkle evenly 8 g of the above powder. Fold the cotton paper from two sides for 6 cm, make paper-rolls, and make 1000 rolls seal dry at a lower temperature.

Description Cylindrical, 20-21 cm long, 1.7-1.8 cm in diameter; odour, aromatic, smoked persistently with characteristic odour after burning.

Identification (1) Microscopical: T-shaped hairs curved, with a 2-4-celled stalk. Nonglandular hairs 1-6-celled, with warty walls. Fibre bundles brown, walls heavily thickened, some surrounded by cells containing prisms of calcium oxalate, forming crystal fibres. Secretory cells subrounded, containing pale yellowish-brown to reddish-brown secretions, surrounded by radially arranged cells. Prisms of calcium oxalate abundant in parenchyma.
(2) Macerate 5 g, removed cotton paper and mixed thoroughly, with 30 ml of ether for 30 minutes, filter, and expel ether to about 1 ml as the test solution. Dissolve a quantity of cineole CRS in ether to prepare a solution containing 1 μl per ml as the reference solution. Carry out the method for thin layer chromatography (Appendix Ⅵ B), using silica gel G mixed with sodium carboxymethyl cellulose as the coating substance and a mixture of petroleum ether (30-60℃) and ethyl acetate (18 : 1) as the mobile phase. Apply separately 10 μl of the test solution and 3 μl of the reference solution to the plate. After developing and removal of the plate, dry in air and spray with 5% vanillin in sulfuric acid and heat to the spots clear. The spot in the chromatogram obtained with the test solution corresponds in position and colour to the spot in the chromatogram obtained with the reference solution.
(3) Macerate 5 g, removed cotton paper and mixed thoroughly, with 30 ml of ether for 60 minutes, shake constantly, filter, and expel the solvent. Dissolve the residue in 1 ml of ethyl acetate as the test solution. Dissolve a quantities of isoimperatorin CRS in ethyl acetate to prepare a solution containing 1 mg per ml as the reference solution. Carry out the method for thin layer chromatography (Appendix Ⅵ B), using silica gel G mixed with sodium carboxymethylcellulose as the coating substance and a mixture of petroleum ether (30-60℃) and ether (3 : 2) as the mobile phase. Apply separately 15 μl of the test solution and 4 μl of the reference solution to the plate. After developing at the temperature below 25℃ and removal of the plate, dry in air and examine under ultraviolet light at 365 nm. The fluorescent spot in the chromatogram obtained with the test solution corresponds in position and colour to the spot in the chromatogram obtained with the reference solution.
(4) Macerate 5 g, removed cotton paper and mixed thoroughly, with 40 ml of ethanol for 50 minutes, shake

constantly, filter, and use the filtrate as the test solution. Dissolve a quantity of cinnamaldehyde CRS in ethanol to prepare a solution containing 1 μl per ml as the reference solution. Carry out the method for thin layer chromatography (Appendix Ⅵ B), using silica gel G mixed with sodium carboxymethyl cellulose as the coating substance and a mixture of petroleum ether (30-60℃) and ethyl acetate (17 : 3) as the mobile phase. Apply separately 10 μl of the test solution and 2 μl of the reference solution to the plate. After developing and removal of the plate, dry in air and spray with dinitrophenylhydrazine TS. The spot in the chromatogram obtained with the test solution corresponds in position and colour to the spot in the chromatogram obtained with the reference solution.

Weight variation Take 10 rolls, removed cotton paper, weigh separately, and compare with the labeled weight. Limit of weight variation is not less than 10 per cent and not more than 10 per cent of the labeled weight.

Action To move *qi* and promote blood circulation, and expel *wind-dampness*.

Indications Arthralgia due to *wind*, *cold* and damp, aching and numbness of muscles, painful joints and limbs, and cold pain in the stomach and abdomen.

Usage and dosage Applied for direct moxibustion until the appearance becomes glowing. 1-2 times a day or following doctor's advice.

Strength 28 g per roll

Storage Preserve in tightly closed containers, protected from moisture.

Yatong Yili Wan
(牙痛一粒丸)
Yatong Yili Pills

Ingredients Venenum Bufonis 240 g; Cinnabaris 50 g; Realgar 60 g; Radix et Rhizoma Glycyrrhizae 240 g.

Procedure Levigate separately Cinnabaris and Realgar to very fine powder. Pulverize Venenum Bufonis and Radix et Rhizoma Glycyrrhizae separately to fine powder. Triturate all the powders, sift and mix thoroughly. Make small pills with water and dry.

Description Yellowish-brown watered pills; odour, slight; taste, pungent and numb.

Identification (1) Moisten 0.1 g, in fine powder, with water, add 2 ml of nitric acid solution saturated with potassium chlorate, shake, and allow to cool, centrifuge, add 0.5 ml of barium chloride TS to the supernatant liquid and mix well; a white precipitate is produced. Centrifuge, discard the supernatant, add 2 ml of water to the precipitate and shake, the precipitate is not dissolved.

(2) Grind well 0.2 g, add 10 ml of dilute ethanol, heat under reflux for 1 hour, and filter. Evaporate the filtrate to dryness, and dissolve the residue in 1 ml of ethanol as the test solution. Prepare a solution of 50 mg of Radix et Rhizoma Glycyrrhizae reference drug in the same manner as the reference drug solution. Carry out the method for thin layer chromatography (Appendix Ⅵ B), using silica gel G as the coating substance and the lower layer of chloroform, methanol and water (13 : 7 : 2) as the mobile phase. Apply separately to the plate 2 μl of each of the two solutions. After developing and removal of the plate, dry in air, spray with 10% sulphuric acid in ethanol and heat at 105℃ to the spots distinct. The spots in the chromatogram obtained with the test solution correspond in position and colour to the spots in the chromatogram obtained with the reference drug solution.

(3) Transfer 0.5 g, ground well, to a Sohxlet's extractor, add 70 ml of chloroform, heat under reflux for 2 hours, and concentrate the extracts to about 1 ml as the test solution. Dissolve a quantity of resibufogenin CRS in chloroform to prepane a solution containing 1 mg per ml as the reference solution. Carry out the method for thin layer chromatography (Appendix Ⅵ B), using silica gel GF_{254} as the coating substance and a mixture of cyclohexane, chloroform and acetone (4 : 3 : 3) as the mobile phase. Apply in strip separately 5-10 μl of each of the two solutions to the plate. After developing and removal of the plate, dry in air, and examine under ultraviolet light at 254 nm. The strip in the chromatogram obtained with the test solution corresponds in position and colour to the strip in the chromatogram obtained with the reference solution.

Arsenic trioxide Weigh accurately 1.85 g of the pills, pulverized to fine powder, add 20 ml of dilute hydrochloric acid, stir constantly for 30 minutes, centrifuge, and take the supernatant. Wash the precipitate with two 10-ml quantities of dilute hydrochloric acid TS, stir for 30 minutes, and centrifuge. Combine the supernatant in a 100 ml volumetric flask, dilute with water to volume, and mix well. Measure accurately 10 ml to a 100 ml volumetric flask, dilute with water to volume, and mix well. Measure accurately 2 ml, add 5 ml of hydrochloric acid and 21 ml of water, carry out the limit test for arsenic (Appendix Ⅸ F), any stain produced is not more intense than the standard stain.

Weight variation Take 125 pills as one part, weigh separately 10 parts, and compare with the labeled weight. Limit of weight variation is not less than 10% and not more than 10% of the labeled weight. Not more than 2 parts exceed the limit of weight variation and none double the limit of weight variation.

Other requirements Comply with the general requirements for pills (Appendix Ⅰ A).

Assay Carry out the method for high performance liquid chromatography (Appendix Ⅵ D).

Chromatographic system and system suitability Use octadecylsilane bonded silica gel as the stationary phase and a mixture of acetonitrile and water (50 : 50) as the mobile phase. As detector a spectrophotometer set at 296 nm. The number of theoretical plates of the column is not less than 4000, calculated with the reference to the peak of cinobufagin.

Reference solution Weigh accurately 10 mg each of cinobufagin CRS and bufogenin CRS in a 100 ml volumetric flask, dissolve with methanol and dilute to volume. Measure accurately 5 ml in a 10 ml volumetric flask, dilute with methanol to volume, and mix well (containing 50 μg each of cinobufagin and bufogenin per ml).

Test solution Weigh accurately 75 mg of the pills, pulverized to fine powder, in a stopper conical flask, add accurately 25 ml of methanol, stopper, and weigh. Ultrasonicate (power, 250 W; frequency, 33 kHz) for 30 minutes, stand to cool, weigh again, replenish the lost weight with methanol and mix well. Filter and use the successive filtrate as the test solution

Procedure Inject accurately 10 μl of each of the reference solution and the test solution into the column, and calculate the content.

It contains not less than 19.5 mg of the total amount of cinobufagin ($C_{26}H_{34}O_6$) and bufogenin ($C_{24}H_{32}O_4$) per gram,

referred to Venenum Bufonis.

Action To relieve toxicity and swelling, and kill parasites and pain.

Indications Swollen painful gums or dental cavities due to exuberant fire in the interior.

Usage and dosage 1-2 pills, filled in the tooth cavity or the crevice between the affected teeth and pack with a sterilized cotton ball to prevent the pills from falling off.

Precaution Spit out the saliva after it is sucked, and never swallow the saliva.

Strength 0.3 g per 125 pills

Storage Preserve in tightly closed containers, protected from moisture.

Yejuhua Shuan (野菊花栓)

Yejuhua Suppositories

Yejuhua Suppositories are Suppositories prepared from Flos Chrysanthemi Indici.

Procedure Decoct Flos Chrysanthemi Indici with water three times, 1.5 hours for the first time, 1 hour for the second time and 40 minutes for the third time respectively. Combine the decoctions, filter, and concentrate the filtrate to a thin extract with a relative density of 1.10 (50-60℃), add ethanol to a content of 65% ethanol, stand. Separate the supernatant, recover ethanol and concentrate to an extract with a relative density of 1.17 (50℃). Add ethanol to a content of 80% ethanol, stand. Separate the supernatant, recover ethanol and concentrate to a thick extract (about 800 g). Heat 1380 g of semi-synthetic fatty acid ester to melt, keep the temperature (40℃ ± 2℃). Add 60% ethanol 300 g into the thick extract, stir well, add it into the suppository bases, stir constantly, pour into moulds; Or Heat 1600 g of polyethylene glycol to melt, add into the thick extract with stirring, stir well, pour into moulds with lubricant additive, make to 1000 suppositories.

Description Brown or dark brown suppositories like torpedo.

Identification To 0.5 g, cut into pieces, add 5 ml of petroleum ether (60-90℃) and macerate on a water bath at 50℃ for 15 minutes, with constant shaking, discard the petroleum ether, treat the residue with petroleum ether again in the same manner, discard the petroleum ether, Evaporate the residue to dryness and macerate in 20 ml of methanol on a water bath at 60℃ for 15 minutes, shake frequently, cool and filter, use the filtrate as the test solution. Macerate 0.2 g of Flos Chrysanthemi Indici reference drug in 10 ml of petroleum ether (60-90℃) on a water bath at 50℃ for 30 minutes, discard the petroleum ether. Evaporate the residue to dryness, add 10 ml of methanol, heat under reflux for 30 minutes, cool and filter, use the filtrate as the reference drug solution. Dissolve Buddleoside CRS in methanol to prepare a solution containing 0.2 mg per ml as the reference solution. Carry out the method for thin layer chromatography (Appendix Ⅵ B), using silica gel G as the coating substance, and a mixture of ethyl acetate, butanone, formic acid and water (5 : 3 : 1 : 1) as the mobile phase. Apply separately 3 μl of each of the three solutions to the plate. After developing and removal of the plate, dry in air. Spray with aluminum chloride TS, heat to dryness, examine under ultraviolet light at 365 nm. The fluorescent spots in the chromatogram obtained with the test solution correspond in position and colour to the spots in the chromatogram obtained with the reference drug solution and the reference solution.

Other requirements Comply with the general requirements for suppositories (Appendix Ⅰ W).

Assay Carry out the method for high performance liquid chromatography (Appendix Ⅵ D)

Chromatographic system and system suitability Use Octadecylsilane bonded silica gel as the stationary phase and a mixture of methanol, water and acetic acid (54 : 44 : 2) as the mobile phase. As detector a spectrophotometer set at 326 nm. The number of theoretical plates of the column is not less than 2500, calculated with the reference to the peak of Buddleoside.

Reference solution Dissolve a quantity of Buddleoside CRS in methanol to prepare a solution containing 40 μg per ml.

Test solution Heat and melt 5 pills, obtained under the test of weight variation, in a small beaker, on a water bath at 60℃, remove and cool while stirring. Ultrasonicate (power, 250 W; frequency, 33 kHz) 0.8 g, weighed accurately, in a 10 ml centrifugal tube, with 5 ml of petroleum ether (60-90℃), at 50℃ for 15 minutes, centrifuge and discard the supernatant. Treat the residue with petroleum ether again, discard the petroleum ether, and evaporate the residue to dryness. Dissolve the residue with a quantity of methanol to a 100 ml volumetric flask, add a quantity of methanol, ultrasonicate at 60℃ for 30 minutes, cool and dilute with methanol to the volume, shake well and filter, use the successive filtrate as the test solution.

Procedure Inject accurately 10 μl of each of the reference solution and the test solution into the column, and calculate the content.

It contains not less than 5.0 mg of Buddleoside ($C_{28}H_{32}O_{14}$) per pill, referred to Flos Chrysanthemi Indici.

Action To clear *heat* and *toxicity*.

Indications Stranguria due to accumulated *heat* in the *lower-energizer*, with manifestations of frequent urination, burning and painful urethra, straining and distending pain of the lower abdomen, perineum or the lumbosacral portion; chronic prostatitis and chronic pelvic inflammation with above symptoms.

Usage and dosage 1 suppository, 1-2 times a day, administrated through rectal, or follow doctor's advice.

Strength 2.4 g per suppository

Storage Preserve in tightly closed containers below 30℃.

Yening Tangjiang (夜宁糖浆)

Yening Syrup

Ingredients Cortex Albiziae 105 g; Ganoderma 50 g; Caulis Polygoni Multiflori 105 g; Fructus Jujubae 75 g; Fructus Ligustri Lucidi 105 g; Radix et Rhizoma Glycyrrhizae 30 g; Fructus Tritici Aestiri Immaturus 300 g.

Procedure Boil Fructus Tritici Aestiri Immaturus with water, then macerate at 80-90℃ twice, 2 hours for each time, and combine the infusions. Pulverize Ganoderma to coarse powder, macerate with a quantity of ethanol for 7 days, squeeze to filter, recover ethanol of the filtrate. Decoct the residue and the other five ingredients with water twice, each for 3 hours, combine the decoctions, filter,

combine the filtrate and the above two solutions, allow to stand, filter, concentrate the filtrate to a quantity. Add 830 g of sucrose and a quantity of preservative, boil to dissolve, filter, add water to 1000 ml and mix well.

Description A brown thick liquid; odour, slight; taste, sweet, slightly bitter.

Identification Measure 30 ml of the syrup, add 60 ml of water, stir well, extract with 50 ml of ether, shake and separate the ether layer, evaporate the ether extract to dryness, dissolve the residue in 0.5 ml of chloroform as the test solution. Dissolve a quantity of emodin CRS in chloroform to prepare a solution containing 0.1 mg per ml as the reference solution. Carry out the method for thin layer chromatography (Appendix Ⅵ B), using silica gel G as the coating substance and the upper layer of a mixture of petroleum ether (30-60℃), ethyl formate and formic acid (15 : 5 : 1) as the mobile phase. Apply separately 10 μl of each of the two solutions to the plate. After developing and removal of the plate, dry in air and examine under ultraviolet light at 365 nm. The fluorescent spot in the chromatogram obtained with the test solution corresponds in position and colour to the spot in the chromatogram obtained with the reference solution.

Relative density Not less than 1.27 (Appendix Ⅶ A).

Other requirements Comply with the general requirements for syrups (Appendix Ⅰ H).

Action To nourish blood to anchor the mind.

Indications Insomnia, dreamfulness, dizziness and lassitude due to insufficient *heart-blood*; neurasthenia with above symptoms.

Usage and dosage 40 ml, twice a day.

Storage Preserve in tightly closed containers.

Yiganning Keli
(乙肝宁颗粒)

Yiganning Granules

Ingredients Radix Astragali 606 g; Herba Hedyotis Diffusae 408 g; Herba Artemisiae Scopariae 606 g; Herba Lysimachiae 408 g; Radix Codonopsis 490 g; Herba Taraxaci 408 g; Radix Polygoni Multiflori Praeparata Cum Succo Glycines Sotae 490 g; Cortex Moutan 408 g; Radix et Rhizoma Salviae Miltiorrhizae 490 g; Poria 408 g; Radix Paeoniae Alba 408 g; Rhizoma Atractylodis Macrocephalae 408 g; Fructus Toosendan 408 g.

Procedure Decoct Radix Astragali with water twice, 2 hours for each, combine the decoctions, filter, and concentrate the filtrate to a thin extract with a relative density of 1.25 (20℃). Distill volatile oil from Herba Artemisiae Scopariae, coat with 290 g of β-cyclodextrin. Decoct the residue with the other eleven ingredients with water twice, 2 hours for each, combine the decoctions, filter, and concentrate the filtrate to a thin extract with a relative density of 1.25 (20℃). Cool and add ethanol to a content of 55% ethanol, allow to stand over 24 hours, recover ethanol in supernatant to no ethanolic smell, add the thin extract of Radix Astragali, and concentrate to a thin extract with a relative density of 1.26 (20℃). Add 145 g of glutin, 1.2 g of stevioside, 162 g of lactose, and the above coated volatile oil, to make granules, dry below the temperature of 60℃, make to 1000 g granules (without sucrose); or add 5270 g of sucrose and the above coated volatile oil, to make granules, dry below the temperature of 60℃, make to 5670 g granules.

Description Yellowish-brown to dark brown granules; taste, sweet, slightly bitter, or slightly sweet, slightly bitter (granules without sucrose).

Identification (1) To 1 pack of the granules, add 50 ml of methanol, heat under reflux for 1 hours, cool and filter. Evaporate the filtrate to dryness, dissolve the residue in 30 ml of water. Extract with two 30-ml quantities of *n*-butanol saturated with water, combine the *n*-butanol extracts, wash with two 20-ml quantities of 1% solution of sodium hydroxide, wash the extract of *n*-butanol to neutral with water saturated with *n*-butanol. Separate the *n*-butanol layer and evaporate to dryness, dissolve the residue in 1 ml of methanol as the test solution. Dissolve a quantity of astragaloside Ⅳ CRS in methanol to prepare a solution containing 1 mg per ml as the reference solution. Carry out the method for thin layer chromatography (Appendix Ⅵ B), using silica gel G as the coating substance and the lower layer of a mixture of chloroform, ethyl acetate, methanol and water (20 : 40 : 22 : 10, standing below 10℃ over 12 hours) as the mobile phase. Apply separately 5 μl of each of the test solution and the reference solution to the plate. After developing and removal of the plate, dry in air. Spray with 10% sulfuric acid in ethanol, heat at 105℃ to the spots clear. The spot in the chromatography obtained with the test solution corresponds in position and colour to the spot in the chromatography obtained with the reference solution.

(2) Dissolve 1 pack of the granules in 30 ml of water, adjust to pH 2 with hydrochloric acid. Extract with two 20-ml quantities of ether, evaporate the ether extracts to dryness, dissolve the residue in 1 ml of ethanol as the test solution. Dissolve a quantity of protocatechuic aldehyde CRS in ethanol to prepare a solution containing 1 mg per ml as the reference solution. Carry out the method for thin layer chromatography (Appendix Ⅵ B), using silica gel G as the coating substance and a mixture of chloroform, acetone and formic acid (12 : 1 : 0.4) as the mobile phase. Apply separately 2 μl of the test solution and 1 μl of the reference solution to the plate. After developing and removal of the plate, dry in air. Spray with a mixture of 2% solution of ferric chloride and 1% solution of potassium ferricyanide (1 : 1). The spot in the chromatography obtained with the test solution corresponds in position and colour to the spot in the chromatography obtained with the reference solution.

(3) To 2 packs of the granules, add 50 ml of methanol, heat under reflux for 1 hours, cool and filter. Evaporate the filtrate to dryness, dissolve the residue in 20 ml of water. Extract with three 20-ml quantities of *n*-butanol saturated with water, combine the *n*-butanol extracts, wash with 5 ml of ammonia TS. Separate the *n*-butanol layer, wash again with two 15-ml quantities of water saturated with *n*-butanol. Separate the *n*-butanol layer and evaporate to dryness, dissolve the residue in 1 ml of ethanol as the test solution. Dissolve a quantity of paeoniflorin CRS in methanol to prepare a solution containing 1 mg per ml as the reference solution. Carry out the method for thin layer chromatography (Appendix Ⅵ B), using silica gel G as the coating substance and a mixture of chloroform, ethyl acetate, methanol and formic acid (40 : 5 : 10 : 0.2) as the mobile phase. Apply separately 2 μl of each of the test solution and the reference solution to the plate. After developing and removal of the plate, dry in air. Spray with vanillin TS, heat at 105℃ for several minutes. The spot in the chromatography obtained with the test solution corresponds in position and colour to the spot in the chromatography obtained with the reference solution.

(4) To 3 packs of the granules, add 50 ml of 2 mol/L solution of sulfuric acid, heat under reflux for 1 hour, and allow to cool. Extract with two 30-ml quantities of ether, separate the ether layer, evaporate to dryness, dissolve the

residue in 1 ml of methanol as the test solution. Prepare a solution of 1 g of Radix Polygoni Multiflori reference drug and 20 ml of 2 mol/L solution of sulfuric acid in the same manner as the reference drug solution. Dissolve a quantity of emodin CRS in methanol to prepare a solution containing 1 mg per ml as the reference. Carry out the method for thin layer chromatography (Appendix Ⅵ B), using silica gel G as the coating substance and a mixture of toluene, ethyl acetate, and formic acid (15 : 2 : 1) as the mobile phase. Apply separately 5 μl of the test solution and 2 μl of each of the reference solution and the reference drug solution to the plate. After developing and removal of the plate, dry in air, and examine under ultraviolet light at 365 nm. The fluorescent spots in the chromatography obtained with the test solution correspond in position and colour to the spots in the chromatography obtained with the reference solution and the reference drug solution, expose the plate to ammonia vapour, the spots turn to red.

Water Not more than 8.0 per cent for granules without sucrose (Appendix Ⅸ H).

Other requirements Comply with the general requirements for granules (Appendix Ⅰ C).

Assay Carry out the method for high performance liquid chromatography (Appendix Ⅵ D).

Chromatographic system and system suitability Use octadecylsilane bonded silica gel as the stationary phase and a mixture of methanol and water (75 : 25) as the mobile phase. Examine with the evaporative light scattering detector. Maintain the column temperature at 40℃. The number of theoretical plates of the column is not less than 2000, calculated with the reference to the peak of astragaloside Ⅳ.

Reference solution Weigh accurately a quantity of astragaloside Ⅳ CRS, dissolve in methanol to prepare a reference solution containing 60 μg per ml.

Test solution Pulverize the granules, obtained under the test of weight variation, to fine powder, weigh accurately 5 g or 1 g (granules without sucrose), and dissolve in 20 ml of water. Extract with four 20-ml quantities of *n*-butanol saturated with water, combine the *n*-butanol extracts, wash with two 20-ml quantities of ammonia TS. Separate the *n*-butanol layer, wash again with two 20-ml quantities of water saturated with *n*-butanol. Separate the *n*-butanol layer, evaporate to dryness, dissolve the residue in a quantity of methanol, transfer to a 5 ml volumetric flask, dilute to volume with methanol. Mix well, filter, and use the successive filtrate as the test solution.

Procedure Inject accurately 10 μl, 30 μl of the reference solution and 10 μl of the test solution into the column, respectively, and calculate the content, using a calibration equation of logarithm alteration of two external standards.
It contains not less than 0.50 mg of astragaloside Ⅳ ($C_{41}H_{68}O_{14}$) per pack, referred to Radix Astragali.

Action To reinforce *qi* and spleen, promote blood circulation to resolve stagnant blood, and clear heat and relieve *toxicity*.

Indications Chronic hepatitis due to a *deficiency* of *spleen-qi*, blockage of meridians by stagnant blood and retention of *damp-heat* with manifestations of hypochondriac pain, abdominal bloating, lassitude and dark yellow urine; acute hepatitis with above symptoms.

Usage and dosage 1 pack, 3 times a day; appropriate reduction of the dosage for children. 3 months making a course of treatment for chronic hepatitis.

Precaution Avoid pungent and greasy foods during administration.

Strength (1) 17 g per pack (2) 3 g per pack (granules without sucrose)

Storage Preserve in tightly closed containers.

Yinhuang Koufuye (银黄口服液)

Yinhuang Mixture

Ingredients Extractum Lonicerae Japonicae 2.4 g (calculated as chlorogenic acid); Extractum Scutellariae 24 g (calculated as baicalin).

Procedure Dissolve Extractum scutellariae with water, adjust to pH 8 with 8% solution of sodium hydroxide, filter; combine the filtrate with Extractum Lonicerae Japonicae, adjust to pH 7.2 with 8% solution of sodium hydroxide, decoct for 1 hour and filter, add a quantity of simple syrup to the filtrate and dilute with water to almost the total amount, mix well, adjust to pH 7.2 with 8% sodium hydroxide, dilute with water to 1000 ml, filter, pack, seal and sterilize.

Description A clear, reddish-brown liquid; taste, sweet, slightly bitter.

Identification Mix well 1 ml of the mixture with 9 ml of 75% ethanol as the test solution. Dissolve a quantity of baicalin CRS and chlorogenic acid CRS in methanol to prepare a solutions containing 1 mg and 0.3 mg per ml as the reference solutions. Carry out the method for thin layer chromatography (Appendix Ⅵ B) using acetic acid as the mobile phase. Apply separately 2 μl of each of the above three solutions to a polyamide membrane. After developing and removal of the membrane, dry in air, and examine under ultraviolet light at 365 nm. The fluorescent spots in the chromatogram obtained with the test solution correspond in position and colour to the spots in the chromatogram obtained with the reference solutions.

Relate density Not less than 1.10 (Appendix Ⅶ A).

pH value 5.5-7.0 (Appendix Ⅶ G).

Other requirements Comply with the general requirements for mixtures (Appendix Ⅰ J).

Assay ***Extractum Lonicerae Japonicae*** Carry out the method for high performance liquid chromatography (Appendix Ⅵ D).

Chromatographic system and system suitability Use octadecylsilane bonded silica gel as the stationary phase and a mixture of acetonitrile and 0.4% solution of phosphoric acid (10 : 90) as the mobile phase. As detector a spectrophotometer set at 327 nm. The number of theoretical plates of the column is not less than 2000, calculated with the reference to the peak of chlorogenic acid.

Reference solution Dissolve a quantities of chlorogenic acid CRS, weighed accurately, in an amber volumetric flask, in 50% methanol to prepare a solution containing 40 μg per ml.

Test solution Measure accurately 1 ml of the mixture in a 50 ml amber volumetric flask, dilute with 50% methanol to volume, mix well, filter and use the successive filtrate as the test solution.

Procedure Inject accurately 10 μl of each of the reference solution and the test solution into the column, and calculate the content.
It contains not less than 1.7 mg of chlorogenic acid ($C_{16}H_{18}O_9$)

per ml, referred to Extractum Lonicerae Japonicae.

Extractum Scutellariae Carry out the method for high performance liquid chromatography (Appendix Ⅵ D).

Chromatographic system and system suitability Use octadecylsilane bonded silica gel as the stationary phase and a mixture of methanol, water and phosphoric acid (50 : 50 : 0.2) as the mobile phase. As detector a spectrophotometer set at 274 nm. The number of theoretical plates of the column is not less than 2500, calculated with the reference to the peak of baicalin.

Reference solution Weigh accurately 10 mg of baicalin CRS in a 100 ml volumetric flask, dissolve with methanol, dilute with methanol to volume, and mix well. Measure accurately 5 ml in a 10 ml volumetric flask, dilute with water to volume, and mix well (containing 50 μg of baicalin per ml).

Test solution Measure accurately 1 ml of the mixture in a 50 ml volumetric flask, dilute with water to volume, and mix well. Measure accurately 3 ml in a 25 ml volumetric flask, dilute with 50% methanol to volume, mix well, filter, and use the successive filtrate as the test solution.

Procedure Inject accurately 10 μl of each of the reference solution and the test solution into the column, and calculate the content.
It contains not less than 18.0 mg of baicalin ($C_{21}H_{18}O_{11}$) per ml, referred to Extractum Scutellariae.

Action To clear *heat* and disperse *wind*, and ease the throat and relieve *toxicity*.

Indications Dry and painful throat, swollen tonsil, thirst, fever due to affliction from external *wind-heat* and extremely abundant heat in the lung and stomach; acute or chronic tonsillitis, acute and chronic pharyngitis and upper respiratory tract infection with above symptoms.

Usage and dosage 10-20 ml, 3 times a day; appropriate reduction of the dosage for children.

Strength 10 ml per phial

Storage Preserve in tightly closed containers, stored in a cool place.

Attached:

Extractum Lonicerae Japonicae (金银花提取物)

Honeysuckle Flower Extract

Honeysuckle Flower Extract is a liquid prepared from Flos Lonicerae Japonicae.

Procedure Heat under reflux Flos Lonicerae Japonica with 15% ethanol for two times, one hour for each, combine the extract, concentrate in vacuum to a thin extract of a relative density of 1.15-1.18 (60℃), and add ethanol to the content of 65% ethanol. Allow to stand for 24 hours, concentrate the supernatant in vacuum to a relative density of 1.20-1.24 (60℃), add water to 750 g, preserre in well closed container, refrigerate over 24 hours, and use the supernatant.

Description A reddish-brown, liquid, odour slight; taste, slightly bitter.

Identification Mix well 1 ml of the liquid with 2 ml of 75% ethanol as the test solution. Dissolve a quantity of chlorogenic acid CRS in 75% ethanol to prepare a solution containing 1 mg per ml as the reference solution. Carry out the method for thin layer chromatography (Appendix Ⅵ B), using acetic acid as the mobile phase. Apply separately 2 μl of each of the above two solutions to a polyamide film. After developing and removal of the plate, dry in air, and examine under ultraviolet light at 365 nm. The spot in the chromatogram obtained with the test solution corresponds in position and colour to the spot in the chromatogram obtained with the reference solution.

Assay Measure accurately 1 ml of the liquid in a 100 ml volumetric flask, carry out the method as described under Assay of Extractum Lonicerae Japonicae in Yinhuang Mixture, and calculate the content. It contains not less than 3.6 mg of chlorogenic acid ($C_{16}H_{18}O_9$) per ml.

Action To clear *toxic-heat*, disperse wind-heat by cooling.

Indication Carbuncle, furunculosis, laryngitis, erysipelas, hematodiarrhoea due to *toxic-heat*, common colds due to *wind-heat*, warm disease with febris.

Usage and dosage Applied to drug products and daily chemical products, dosage is determined according to different usage.

Storage Preserve in tightly closed container, protected from light.

Preparation Yinhuang Mixture

Extractum Scutellariae (黄芩提取物)

Baical Skullcap Extract

Baical Skullcap Extract is a dried powder extracted from Radix Scutellariae.

Procedure Decoct Radix Scutellariae with water for two times, 1.5 hours for each. Filter, combine the filtrate, and concentrate to a quantity (ten to one crude drug in proportion). Adjust to pH 1.8-2.0 with 2 mol/L solution of hydrochloric acid, and keep warm at 60℃ for 30 minutes. Stand to cool to room temperature, and stand for 12 hours. Filter, wash the precipitate with ethanol to pH 4.0, add 10 volumes of water, and stir thoroughly. Adjust to pH 7.0 with 20% solution of sodium hydroxide, add equal volume of ethanol, and stir thoroughly. Allow to stand for 12 hours, filter, adjust the filtrate to pH 1.8-2.0 with 2 mol/L solution of hydrochloric acid, and keep warm at 80℃ for 30 minutes. Allow to cool to room temperature, filter, wash the precipitate with ethanol to pH 4.0, dry in vacuum, and grind to fine powder.

Description Pale yellow powder; odour slight; taste, bitter.

Identification To a small amount of the powder, add 2 ml of water, then add 1 drop of sodium hydroxide TS; a orange colour is produced. Add dilute acetic acid TS, colour of the solution disappear, then add 1 drop of 5% solution of zirconyl dichloride, the solution show yellow colour, which not disappear when adding dilute hydrochloric acid TS.

Water Not more than 5.0 per cent (Appendix Ⅸ H, method Ⅰ).

Assay Carry out the method for higt performance liquid chromatography (Appendix Ⅵ D).

Chromatographic system and system suitability Use octadecylsilane bonded silica gel as the stationary phase and a mixture of methanol, water and glacial acetic acid (48 : 52 : 1) as the mobile phase. As detector a spectrophotometer set at 276 nm. The number of theoretical plates of the column is not less than 1000, calculated with the reference to the peak of baicalin.

Reference solution Dissolve a quantity of baicalin CRS in 50% methanol to prepare a solution containing 0.1 mg per ml.

Test solution Weigh accurately 10 mg of the powder in a 100 ml volumetric flask, dilute with 50% methanol to volume, and mix well. Filter, and use the successive filtrate as the test solution.

Procedure Inject accurately 10 μl of each of the reference solution and the test solution into the column, and calculate the content.
It contains not less than 95.0 per cent of baicalin ($C_{21}H_{18}O_{11}$), calculated with reference to the dried drug.

Action To clear *heat* and resolve *damp*, purge fire and release toxicity, and check bleeding and prevent miscarriage.

Indications Constriction in the chest, nausea and vomitting, stuffiness in the chest, dysentery, and jaundice due to *damp-heat* or *summer-heat*; cough due to excessive *lung-heat*, high fever and polydipsia, hematemesis due to *heat* in blood, carbuncles and abscesses, and threatened abortion.

Usage and dosage Applied for making pattern preparations. Dosage determined according to each formula.

Storage Preserve in tightly closed container, proteated from moisture.

Preparation Yinhuang Mixture

Yinianjin
(一捻金)

Yinianjin Powder

Ingredients Radix et Rhizoma Rhei 100 g; Semen Pharbitidis (stir-baked) 200 g; Semen Arecae 100 g; Radix Gingseng 100 g; Cinnabaris 30 g.

Procedure Levigate Cinnabaris to very fine powder and pulverize the other four ingredients to fine powder. Triturate all the powders, sift and mix thoroughly.

Description A yellowish-brown to dark brown powder; odour, slight; taste, slightly bitter and astringent.

Identification (1) Microscopical: Clusters of calcium oxalate large, up to 60-140 μm in diameter. Clusters of calcium oxalate 20-68 μm in diameter, with sharp angle. Palisade cells of testa pale brown or brown, 48-80 μm long. Fragments of endosperm cell colourless, walls relatively thickened, with large subrounded pits. Irregular minute granules dark brownish-red, lustrous, with dark black edge.
(2) Macerate 1. 5 g of the powder in 25 ml of methanol for 1 hour, and filter. Evaporate the filtrate to dryness, dissolve the residue in 20 ml of water, add 2 ml of hydrochloric acid, heat on a water bath for 30 minutes, and cool immediately. Extract with two 20-ml quantities of ether by shaking. Combine the ether liquids, evaporate to dryness, and dissolve the residue in 1 ml of ethyl acetate as the test solution. Prepare a solution of 0. 1 g Radix et Rhizoma Rhei reference drug in the same manner as the reference drug solution. Carry out the method for thin layer chromatography (Appendix Ⅵ B), using silica gel G as the coating substance and the upper layer of petroleum ether (30-60℃), ethyl formate and formic acid (15 : 5 : 1) as the mobile phase. Apply separately to the plate 1-2μl of each of the two solutions. After developing and removal of the plate, dry in air, and examine under ultraviolet light at 365 nm. The five orange-yellow fluorescent spots in the chromatogram obtained with the test solution correspond in position and colour to the spots in the chromatogram obtained with the reference drug solution. Expose to ammonia vapour, examine in daylight, the spots turn to red.
(3) To 3 g add 15 ml of 7% solution of sulfuric acid in 45% ethanol, heat under reflux for 1 hour, cool and filter. Extract the filtrate with 10 ml of chloroform by shaking. Separate the chloroform layer, add a quantity of anhydrous sodium sulfate, shake well and filter. Concentrate the filtrate to about 0. 5 ml as the test solution. Dissolve a quantity of panaxadiol CRS and panaxatriol CRS in dehydrated ethanol to prepare a mixture containing 1 mg of each per ml as the reference solution. Carry out the method for thin layer chromatography (Appendix Ⅵ B), using silica gel G as the coating substance and a mixture of chloroform and ether (1 : 1) as the mobile phase. Apply separately 10 μl of each of the two solutions to the plate. After developing and removal of the plate, dry in air. Spray with a solution of sulfuric acid in ethanol (1→2), heat at 105℃ for about 10 minutes and examine under ultraviolet light at 365 nm. The fluorecent spots in the chromatogram obtained with the test solution correspond in position and colour to the spots in the chromatogram obtained with the reference solution.

Other requirements Comply with the general requirements for powders (Appendix Ⅰ B).

Assay Carry out the method for high performance liquid chromatography (Appendix Ⅵ D).

Chromatographic system and system suitability Use octadecylsilane bonded silica gel as the stationary phase and a mixture of methanol, water and phosphonic acid (85 : 15 : 0. 05) as the mobile phase. As detector a spectrophotometer set at 289 nm. The number of theoretical plates of the column is not less than 2500, calculated with the reference to the peak of emodin.

Reference solution Dissolve a quantities of emodin CRS, weighed accurately, in methanol to prepare a solution containing 4 μg per ml.

Test solution Mix thoroughly the powder obtained under the test of weight variation, weigh accurately 1 g in a stopper conical flask, add accurately 25 ml of methanol, stopper, and weigh. Heat under reflux for 30 minutes, stand to cool, weigh again, and replenish the lost weight with methanol. Mix well, filter, measure accurately 5 ml of the successive filtrate in a 100 ml rounded bottom flask, and recover the solvent. To the residue add 20 ml of 2. 5 mol/L solution of sulfuric acid, ultrasonicate for 10 minutes, heat on a water bath for 1 hour, and cool immediately. Extract with four 25-ml quantities of ether, combine the ether extracts, wash with 15 ml of water, and discard the washing. Recover ether at a lower temperature, dissolve the residue with methanol, transfer to a 25 ml volumetric flask, dilute with methanol to volume and mix well.

Procedure Inject accurately 10 μl of each of the reference solution and the test solution, separately, into the column, and calculate the content.
It contains not less than 0. 50 mg of emodin ($C_{15}H_{10}O_5$) per pack, referred to Radix et Rhizoma Rhei.

Action To promote digestion to remove stagnancy and obstruction, and expel phlegm and relax bowels.

Indications Indigestion due to disharmony between the spleen and stomach, and retention of *phlegm* and food, with manifestations of loss of appetite for food or milk, abdominal bloating and constipation, or coughing and dyspnea with expectoration of much phlegm.

Usage and dosage 0. 3 g, for children under 1 year old; 0. 6 g 1-3 years old; 1 g, 4-6 years old; 1-2 times a day, or follow doctor's advice.

Strength 1. 2 g per pack

Storage Preserve in tightly closed containers.

Yinqiao Jiedu Jiaonang
(银翘解毒胶囊)

Yinqiao Jiedu Capsules

Ingredients Flos Lonicerae Japonicae 200 g; Fructus Forsythiae 200 g; Herba Menthae 120 g; Herba Schizonepetae 80 g; Semen Sojae Preparatum 100 g; Fructus Arctii (stir-baked) 120 g; Radix Platycodonis 120 g; Herba Lophatheri

80 g; Radix et Rhizoma Glycyrrhizae 100 g.

Procedure Pulverize Flos Lonicerae Japonicae and Radix Platycodonis to fine powder respectively. Distill volatile oil from Herba Menthae and Herba Schizonepetae, and collect the aqueous solution in another container. Decoct the residue after distillation, Fructus Forsythiae, Fructus Arctii, Herba Lophatheri and Radix et Rhizoma Glycyrrhizae twice, 2 hours each, combine the decoctions, filter, and remain filtrate for later use. Boil Semen Sojae Preparatum with water, then macerate at 80℃ twice, 2 hours each, combine the infusions and filter. Combine the above two filtrates and the aqueous solution after distillation, concentrate to a thick extract, add the fine powders of Flos Lonicerae Japonicae, Radix Platycodonis, and a quantity of excipients and mix well. Make granules, dry and allow to cool. Spray the above volatile oils upon the granules, mix well and pack into 1000 capsules.

Description Hard capsules, containing pale brown to dark brown granule and powder; odour, aromatic; taste bitter and pungent.

Identification (1) Microscopical: Pollen grains subspheroidal, about 76 μm in diameter, showing spiny sculptures on the exine, with 3 germinal apertures. Clusters of calcium oxalate abundant, 5-17 μm in diameter, occurring in parenchymatous cells. Anastomosing laticiferous tubes, 14-25 μm in diameter, containing pale yellow granules.

(2) Grind 4 g of the content to fine powder, add 20 ml of petroleum ether (30-60℃), stopper well, shake frequently, macerate overnight, filter and evaporate the filtrate to 1 ml as the test solution. Prepare a solution of 0.8 g of Herba Schizonepetae reference drug and 20 ml of petroleum ether (30-60℃) in the same manner as the reference drug solution. Dissolve a quantity of menthol CRS in ethanol to prepare a solution containing 2 mg per ml as the reference solution. Carry out the method for thin layer chromatography (Appendix Ⅵ B), using silica gel G mixed with sodium carboxymethylcellulose as the coating substance and a mixture of *n*-hexane and ethyl acetate (17 : 3) as the mobile phase. Apply separately 10 μl of each of the three solutions to the plate. After developing and removal of the plate, dry in air, spray with anisaldehyde TS, and heat at 105℃ to the spots clear. The spots in the chromatogram obtained with the test solution correspond in position and colour to the spots in the chromatogram obtained with the reference drug solution and the reference solution.

(3) Grind 4 g of the content to fine powder, heat with 20 ml of ethanol under reflux for 1 hour, allow to cool and filter. Evaporate the filtrate to dryness, dissolve the residue in 2 ml of ethanol, filter, and use the filtrate as the test solution. Macerate 2 g of Fructus Forsythiae reference drug in 40 ml of water on a water bath for 1 hour and filter. Evaporate the filtrate to dryness, dissolve the residue in 2 ml of ethanol as the reference drug solution. Carry out the method for thin layer chromatography (Appendix Ⅵ B), using silica gel G as the coating substance and a mixture of chloroform and methanol (20 : 1) as the mobile phrase. Apply separately to the plate 10 μl of each of the two solutions. After developing and removal of the plate, dry in air, spray with a mixture of acetic anhydride and sulfuric acid (20 : 1), heat at 105℃ to the spots clear, allow to cool, and examine under ultraviolet light at 365 nm. The fluorescent spots in the chromatogram obtained with the test solution correspond in position and colour to the spots in the chromatogram obtained with the reference drug solution.

(4) Heat 1.2 g of Fructus Arctii reference drug and 1 g of Radix et Rhizoma Glycyrrhizae reference drug, with 20 ml of ethanol under reflux for 1 hour respectively, allow to cool, filter. Evaporate the filtrate to dryness, dissolve the residue in 2 ml of ethanol respectively, filter, and use the filtrates as the reference drug solutions. Carry out the method for thin layer chromatography (Appendix Ⅵ B), using silica gel G mixed with sodium carboxymethylcellulose as the coating substance and a mixture of chloroform, methanol and water (40 : 10 : 1) as the mobile phrase. Apply separately to the plate 10 μl of each of the two reference drug solutions and the test solution obtained under Identification (3). After developing and removal of the plate, dry in air, spray with a 10% sulfuric acid in ethanol and heat at 105℃ to the spots clear. The spots in the chromatogram obtained with the test solution correspond in position and colour to the spots in the chromatogram obtained with the reference drug solutions.

(5) Grind 4 g of the content to fine powder, add 20 ml of methanol, shake well, stand for 12 hours, filter and use the filtrate as the test solution. Prepare a solution of 0.2 g of Flos Lonicerae Japonicae reference drug and 20 ml of methanol in the same manner as the reference drug solution. Dissolve a quantity of chlorogenic acid CRS in methanol to prepare a solution containing 1 mg per ml as the reference solution. Carry out the method for thin layer chromatography (Appendix Ⅵ B), using silica gel H mixed with sodium carboxymethyl cellulose as the coating substance and the upper layer of a mixture of ethyl acetate, formic acid and water (10 : 2 : 3) as the mobile phrase. Apply separately 10 μl of each of the three solutions to the plate. After developing and removal of the plate, dry in air and examine under ultraviolet light at 365 nm. The fluorescent spots in the chromatogram obtained with the test solution correspond in position and colour to the spots in the chromatogram obtained with the reference drug solution and the reference solution.

Other requirements Comply with the general requirements for capsules (Appendix Ⅰ L).

Assay Carry out the method for high performance liquid chromatography (Appendix Ⅵ D).

Chromatographic system and system suitability Use octadecylsilane bonded silica get as the stationary phase and a mixture of methanol, water, glacial acetic acid and triethylamine (18 : 85 : 1 : 0.3) as mobile phase. As detector a spectrophotometer set at 324 nm. The number of theoretical plates of the column is not less than 3000, calculated with the reference to the peak of chlorogenic acid.

Reference solution Weigh accurately a quantity of chlorogenic acid CRS in an amber volumetric flask, add 50% methanol to prepare a solution containing 35 μg per ml as the reference solution.

Test solution Grind well the content obtained under the test of weight variation, weigh accurately 0.25 g in a 50 ml amber volumetric flask, add accurately 40 ml of 50% methanol, ultrasonicate (power, 260 W; frequency, 40 kHz) for 30 minutes, allow to cool, dilute with 50% methanol to volume, shake well, filter, and use the successive filtrate as the test solution.

Procedure Inject accurately 10μl of each of the reference solution and the test solution into the column, respectively, and calculate the content.

It contains not less than 2.4 mg of chlorogenic acid ($C_{16}H_{18}O_9$) per capsule, referred to Flos Lonicerae Japonicae.

Action To disperse *wind* to release the exterior, and clear *heat* to relieve *toxicity*.

Indications Common cold due to *wind-heat* with manifestations of fever, headache, coughing, dry mouth and sore throat.

Usage and dosage 4 tablets, 2-3 times a day.

Strength 0.4 g per capsule

Storage Preserve in tightly closed containers.

Yinqiao Jiedu Keli
(银翘解毒颗粒)
Yinqiao Jiedu Granules

Ingredients Flos Lonicerae Japonicae 200 g; Fructus Forsythiae 200 g; Herba Menthae 120 g; Herba Schizonepetae 80 g; Semen Sojae Preparatum 100 g; Fructus Arctii (stir-baked) 120 g; Radix Platycodonis 120 g; Herba Lophatheri 80 g; Radix et Rhizoma Glycyrrhizae 100 g.

Procedure Distill volatile oil from Herba Menthae, Herba Schizonepetae and Fructus Forsythiae, and collect the aqueous solution in another container. Decoct the other six ingredients, pulverized to fine powder, with water twice, 1 hour for each time, filter, combine the filtrate with the above aqueous solution and concentrate to a thin extract with a relative density of 1.33-1.35 (80℃); then add a quantity of sucrose, dextrin and ethanol to make 1120 g of granules after drying, spray the above volatile oil and mix thoroughly. or concentrate to a thin extract with a relative density of 1.08-1.10 (60℃), and dry by spraying to powder. Add a quantities of lactose, mix thoroughly, spray the volatile oil, mix well and make 373.3 g of granules (with lactose).

Description Pale brown granules; taste, sweet, slightly bitter; or taste mild, slightly bitter (with lactose).

Identification (1) To 10g, or 3.3 g (with lactose) of the granules, ground to fine powder, add 20 ml of petroleum ether (60-90℃), stopper well, shake constantly and macerate overnight. Filter and evaporate the filtrate to 1 ml as the test solution. Prepare a solution of 0.8 g of Herba Schizonepetae reference drug in the same manner as the reference drug solution. Dissolve a quantity of menthol CRS in ethanol to prepare a solution containing 2 mg per ml as the reference solution. Carry out the method for thin layer chromatography (Appendix Ⅵ B), using silica gel G containing sodium carboxymethyl cellulose as the coating substance and a mixture of *n*-hexane and ethyl acetate (17 : 3) as the mobile phase. Apply separately to the plate 10 μl of each of the three solutions. After developing and removal of the plate, dry in air, spray with anisaldehyde TS, heat at 105℃ to spots clear. The spots in the chromatogram obtained with the test solution correspond in position and colour to the spots in the chromatogram obtained with the reference drug solution and the reference solution separately. (2) Heat under reflux 5 g, or 1.7 g (with lactose), of the granules, ground to fine powder, in 20 ml of ethanol for 1 hour. Allow to cool and filter, evaporate the filtrate to dryness, add 2 ml of ethanol to dissolve the residue, filter and use the filtrate as the test solution. Macerate 2 g of Fructus Forsythiae reference drug in 40 ml of water on a water bath for 1 hour, filter, evaporate the filtrate to dryness and dissolve the residue in 20 ml of ethanol as the reference drug solution. Carry out the method for thin layer chromatography (Appendix Ⅵ B), using silica gel G mixed with sodium carboxymethyl cellulose as the coating substance and a mixture of chloroform and methanol (20 : 1) as the mobile phase. Apply separately to the plate 10μl of each of the two solutions. After developing and removal of the plate, dry in air, spray with a solution of acetic anhydride and sulfuric acid (20 : 1), heat at 105℃ to the spots clear, cool and examine under ultraviolet light at 365 nm. The fluroscent spots in the chromatogram obtained with the test solution correspond in position and colour to the spots in the chromatogram obtained with the reference drug solution. (3) To 1.2 g of Fructus Arctii reference drug and 1 g of Radix et Rhizoma Glycyrrhizae reference drug, add separately 20 ml of ethanol, heat under reflux for 1 hour. Filter and evaporate the filtrates to dryness, dissolve the residue in 2 ml of ethanol respectively, filter and use the filtrate as the reference solutions. Carry out the method for thin layer chromatography (Appendix Ⅵ B), using silica gel G mixed with sodium carboxymethylcellulose as the coating substance and a mixture of chloroform, methanol and water (40 : 10 : 1) as the mobile phase. Apply separately to the plate 10μl of each of the above two reference drug solutions and the test solution obtained under Identification test (2). After developing and removal of the plate, dry in air, spray with 10% sulfuric acid in ethanol and heat at 105℃ to the spots clear. The spots in the chromatogram obtained with the test solution correspond in position and colour to the spots in the chromatogram obtained with the reference drug solutions.

Other requirements Comply with the general requirements for granules (Appendix Ⅰ C).

Action To disperse *wind* to release the exterior, and clear *heat* to relieve *toxicity*.

Indications Common cold due to *wind-heat* with manifestations of fever, headache, coughing, dry mouth and sore throat.

Usage and dosage 15 g or 5 g (with lactose), 3 times a day, 4 times for serious cases; taken after dissolved in boiling water.

Strength (1) 15 g per pack (2) 2.5 g per pack (with lactose)

Storage Preserve in tightly closed containers.

Yinqiao Jiedu Pian
(银翘解毒片)
Yinqiao Jiedu Tablets

Ingredients Flos Lonicerae Japonicae 200 g; Fructus Forsythiae 200 g; Herba Menthae 120 g; Herba Schizonepetae 80 g; Semen Sojae Preparatum 100 g; Fructus Arctii (stir-baked) 120 g; Radix Platycodonis 120 g; Herba Lophatheri 80 g; Radix et Rhizoma Glycyrrhizae 100 g.

Procedure Pulverize Flos Lonicerae Japonicae and Radix Platycodonis to fine powders respectively, and sift. Distill volatile oil from Herba Menthae and Herba Schizonepetae, and collect the aqueous solution in another container. Decoct the residue of distillation, Fructus Forsythiae, Fructus Arctii, Herba Lophatheri and Radix et Rhizoma Glycyrrhizae with water twice, 2 hours each time, combine the decoctions and filter. Boil Semen Sojae Preparatum with water, then macerate at 80℃ twice, 2 hours each time, combine the infusions and filter. Combine the above drug extractives, concentrate to a thick extract, add the fine powders of Flos Lonicerae Japonicae, Radix Platycodonis, and a quantity of excipients and mix thoroughly. Make granules, dry and allow to cool. Spray the above volatile oils upon the granules, mix thoroughly, compress into 1000 tablets or coat with film.

Description Pale brown to brown tablets or film coated tablets with pale brown to brown core; odour, aromatic;

taste, bitter and pungent.

Identification (1) Microscopical: Pollen grains subspheroidal, about 76 μm in diameter, showing sping sculptures on the extexine, with 3 germinal apertures. Clusters of calcium oxalate abundant, 5-17 μm in diameter, containing in parenchymatous cells. Anastomosing laticiferous tubes 14-25 μm in diameter, containing pale yellow granules.
(2) Grind 10 tablets to fine powder, add 20 ml of petroleum ether (60-90℃), stopper well, shake frequently. Macerate overnight, filter and evaporate the filtrate to 1 ml as the test solution. Prepare a solution of 0.8 g of Herba Schizonepetae reference drug and 20 ml of petroleum ether (60-90℃) in the same manner as the reference drug solution. Dissolve a quantity of menthol CRS in ethanol to prepare a solution containing 2 mg per ml as the reference solution. Carry out the method for thin layer chromatography (Appendix Ⅵ B), using silica gel G mixed with sodium carboxymethylcellulose as the coating substance and a mixture of *n*-hexane and ethyl acetate (17 : 3) as the mobile phase. Apply separately to the plate 10 μl of each of the three solutions. After developing and removal of the plate, dry in air, spray with anisaldehyde TS, and heat at 105 ℃ to the spots clear. The spots in the chromatogram obtained with the test solution correspond in position and colour to the spots in the chromatogram obtained with the reference drug solution and the reference solution.
(3) Grind 10 tablets to fine powder, add 20 ml of ethanol, heat under reflux for 1 hour, allow to cool and filter. Evaporate the filtrate to dryness, dissolve the residue in 2 ml of ethanol, filter, and use the filtrate as the test solution. To 2 g of Fructus Forsythiae reference drug, add 40 ml of water, macerate on a water bath for 1 hour and filter. Evaporate the filtrate to dryness, add 20 ml of ethanol to the residue, and prepare a solution in the same manner as the reference drug solution. Carry out the method for thin layer chromatography (Appendix Ⅵ B), using silica gel G mixed with sodium carboxymethylcellulose as the coating substance and a mixture of chloroform and methanol (20 : 1) as the mobile phase. Apply separately 10 μl of each of the two solutions to the plate. After developing and removal of the plate, dry in air and spray with a mixture of acetic anhydride and sulfuric acid (20 : 1). Heat at 105 ℃ to the spots clear, allow to cool, and examine under ultraviolet light at 365 nm. The fluorescent spots in the chromatogram obtained with the test solution correspond in position and colour to the spots in the chromatogram obtained with the reference drug solution.
(4) To 1.2 g of Fructus Arctii reference drug and 1 g of Radix et Rhizoma Glycyrrhizae reference drug, add 20 ml of ethanol respectively and heat under reflux for 1 hour, then filter. Evaporate the filtrate to dryness, dissolve the residue in 2 ml of ethanol respectively, filter, and use the filtrates as the reference drug solutions. Carry out the method for thin layer chromatograph (Appendix Ⅵ B), using silica gel G mixed with sodium carboxymethylcellulose as the coating substance and a mixture of chloroform, methanol and water (40 : 10 : 1) as the mobile phase. Apply separately 10 μl of each of the two reference drug solutions and the test solution obtained under Identification (3) to the plate. After developing and removal of the plate, dry in air and spray with 10% sulfuric acid in ethanol. Heat at 105 ℃ to the spots clear. The spots in the chromatogram obtained with the test solution correspond in position and colour to the spots in the chromatogram obtained with the reference drug solutions.

Other requirements Comply with the general requirements for tablets (Appendix Ⅰ D).

Action To disperse *wind* to release the exterior, and clear *heat* to relieve *toxicity*.

Indications Common cold due to *wind-heat* with manifestations of fever, headache, coughing, dry mouth and sore throat.

Usage and dosage 4 tablets, 2-3 times a day.

Strength 0.52 g per film coated tablet

Storage Preserve in tightly closed containers.

Yinqiao Jiedu Wan
(银翘解毒丸)

Yinqiao Jiedu Pills

Ingredients Flos Lonicerae Japonicae 200 g; Fructus Forsythiae 200 g; Herba Menthae 120 g; Herba Schizonepetae 80 g; Semen Sojae Preparatum 100 g; Fructus Arctii (stir-baked) 120 g; Radix Platycodonis 120 g; Herba Lophatheri 80 g; Radix et Rhizoma Glycyrrhizae 100 g.

Procedure Pulverize Flos Lonicerae Japonicae and Radix Platycodonis to fine powder and sift. Distill volatile oil from Herba Menthae and Herba Schizonepetae, and collect the aqueous solution in another container. decoct the residue of distillation and the other five ingredients with water twice, 2 hours for each time, combine the decoctions and filter. Combine the filtrate and the above aqueous solution, concentrate to a thick extract. Add the fine powders of Flos Lonicerae Japonicae and Radix Platycodonis, mix thoroughly, dry, pulverize to fine powder, and sift. Spray the volatile oil of Herba Menthae and Herba Schizonepetae upon the powder, mix thoroughly. To each 100 g of the powder add 80-90 g of refined honey to make concentrated pills.

Description Brown concentrated pills; odour, aromatic; taste, slightly sweet, bitter and pungent.

Identification (1) Microscopical: Pollen grains subspheroidal, about 76 μm in diameter, spines sculptures on the extine with 3 germinal apertures. Clusters of calcium oxalate abundant, 5-17 μm in diameter, occurring in parenchymatous cells. Anastomosing laticiferous tubes 14-25 μm in diameter, containing pale yellow granules.
(2) Grind well 6 g of the pills with 1.5 g of kieselguhr, Comply with the tests of Identification (2), (3) and (4) described under Yinqiao Jiedu Tablets.

Other requirements Comply with the general requirements for pills (Appendix Ⅰ A).

Action To disperse *wind* to release the exterior, and clear *heat* to relieve *toxicity*.

Indications Common cold due to *wind-heat* with manifestations of fever, headache, coughing, dry mouth and sore throat.

Usage and dosage 1 pill, 2-3 times a day, taken with decoction of reed rhizome (Rhizoma Phragmitis) or warm boiled water.

Strength 3 g per pill

Storage Preserve in tightly closed containers.

Yinqiao Shuangjie Shuan
(银翘双解栓)

Yinqiao Shuangjie suppositories

Ingredients Fructus Forsythiae 1860.46 g; Flos Lonicerae

Japonicae 930.23 g; Radix Scutellariae 1023.26 g; Folium Syringae 465.12 g.

Procedure Decoct Fructus Forsythiae and Flos Lonicerae Japonicae with water twice for 40 minutes each, combine the decoctions, filter and concentrate to a thin extract with a relative density of 1.20-1.25 (60℃), cool, add ethanol to a content of 70% ethanol, allow to stand for 12 hours, filter, and take the filtrate for latter use. Decoct Folium Syringae with water twice for 40 minutes each, combine the decoctions, filter and concentrate to a thin extract with a relative density of 1.20-1.25 (60℃), cool, add ethanol to a content of 70% ethanol, allow to stand for 12 hours, filter. Combine the above filtrates, recove the ethanol to a thick extract with a relative density of 1.32-1.42 (60℃). Pulverize Radix Scutellariae to the coarse powder (pass through No. 2 sieve), decoct with water for three times, 2 hours for the first time, 1 hour for the second and the third time, respectively, combine the decoctions, filter and concentrate to a thin extract with a relative density of 1.0-1.05 (80℃), adjust to pH 1.0-2.0 with 2 mol/L solution of hydrochloric acid at 80℃, keep the temperature for 1 hour, allow to stand for 12 hours, filter. Stir the precipitate in 6-8 times amount of water, adjust to pH 7.0-7.5 with 40% solution of sodium hydroxide and add an equal quantity of ethanol to dissolve by stirring, filter, adjust the filtrate to pH 1.0-2.0 with 2 mol/L solution of hydrochloric acid at 80℃, keep the temperature for 1 hour, allow to stand for 12 hours, filter, wash the precipitate with water to pH 5.0, then wash the precipitate with 50% ethanol to pH 7.0, purify with ethanol to obtain the extract of Radix Scutellariae. Add the extract of Radix Scutellariae to the above thick extract, adjust to pH 7 with 40% solution of sodium hydroxide, heat on a water bath, gently add polysorbate-80 14.54 ml, lanoline 58.15 g, span-40 46.52 g, semi-synthetic fatty acid ester 774.19 g, allow to dissolve, mix well, pour into a suppository mould, cool, make 1000 suppositories (1.5 g per suppository) or 1500 suppositories (1.0 g per suppository).

Description yellowish-brown bullet-shaped suppositories.

Identification (1) To 1 suppository add 20 ml of water, warm to melt, cool and filter, evaporate the filtrate to dryness. Dissolve the residue in 1 ml of 75% ethanol as the test solution. Dissolve separately a quantity of baicalin CRS and chlorogenic acid CRS in 75% ethanol to prepare two solutions containing 0.4 mg each per ml as the reference solutions. Carry out the method for thin layer chromatography (Appendix Ⅵ B), using polyamide membrane as the absorbant and acetic acid as the mobile phase. Apply separately to the membrane 1 μl of above three solutions. After developing and removal of the film, dry in air. Examine under ultraviolet light at 365 nm, the fluoresent spots in the chromatogram obtained with the test solution correspond in position and colour to the spots in the chromatogram obtained with reference solutions.

(2) To 1 suppository add 20 ml of water, warm to melt, cool and filter, evaporate the filtrate to dryness. Dissolve the residue in 1 ml of methanol as the test solution. Heat under reflux 0.5 g of Fructus Forsythiae reference drug with 10 ml of methanol for 20 minutes on a water bath, and filter, use the filtrate as the reference drug solution. Carry out the method for thin layer chromatography (Appendix Ⅵ B), using silica gel G as the coating substance and a mixture of chloroform and methanol (5 : 1) as the mobile phase. Apply separately 2 μl of above two solutions to the plate. After developing and removal of the plate, dry in air. Spray with 10% sulfuric acid in ethanol and heat at 105℃ to the spots clear. The spots in the chromatogram obtained with test solution correspond in position and colour to the spots in the chromatogram obtained with the reference drug solution.

Other requirements Comply with the general requirements for suppositories (Appendix Ⅰ W).

Assay ***Radix Scutellariae*** Carry out the method for high performance liguid chromatography (Appendix Ⅵ D).

Chromatographic system and system suitability Use octadecylsilane bonded silica gel as the stationary phase and a mixture of methanol, water and glacial acetic acid (50 : 50 : 1) as the mobile phase. As detector a spectrophotometer set at 276 nm. The number of theoretical plates of the column is not less than 1600, calculated with reference to the peak of baicalin.

Reference Solution Dissolve a quantity of baicalin CRS, accurately weighed, in 50% methanol to prepare a solution containing 0.1 mg per ml as the reference solution.

Test solution Cut 2 suppositories obtained under the test of weight variation into pieces, weigh accurately 0.1 g, to a 50 ml beaker, dissolve the suppositories in 30 ml of water by heating, cool, filter. Transfer the filtrate to a 50 ml volumetric flask, wash the container and filter with a quantity of water, filter the washings to the same flask, dilute with water to volume, and mix well, filter, use the successive filtrate as the test solution.

Procedure Inject accurately 5 μl of each of the reference solution and the test solution into the column and calculate the content.

It contains not less than 45 mg of baicalin ($C_{21}H_{18}O_{11}$) per suppository for strengh (1) or 67.5 mg per suppository for strengh (2), referred to Radix Scutellariae.

Flos Lonicerae Japonicae Carry out the method for high performance liguid chromatography (Apendix Ⅵ D).

Chromatographic system and system suitability Use octadecylsilane bonded silica gel as the stationary phase and a mixture of methanol, water and glacial acetic acid (15 : 85 : 1) as the mobile phase. As detector a spectrophotometer set at 324 nm. The number of theoretical plates of the column is not less than 2000, calculated with reference to the peak of chlorogenic acid.

Reference solution Dissolve a quantity of chlorogenic acid CRS in water, in a amber volumetric flask to prepare a solution containing 10 μg per ml as the reference solution.

Test solution Cut a quantity of the suppositories obtained under the test of weight variation into pieces, weigh accurately 0.5 g, to a conical flask, dissolve the suppositories in 40 ml of water by heating, cool, filter. Transfer the filtrate to a 100 ml volumetric flask, wash the container and filter with successive quantities of 30 ml and 20 ml of hot water, filter the washings to the same flask, dilute with water to volume, mix well, and filter, use the successive filtrate as the test solution.

Procedure Inject accurately 20 μl of each of the reference solution and the test solution into the column and calculate the content.

It contains not less than 1.7 mg of chlorogenic acid ($C_{16}H_{18}O_9$) per suppository for strength (1) or 2.7 mg per suppository for strength (2), referred to Flos Lonicerae Japonicae.

Action To disperse *wind-heat*, and clear the lung and purge *fire*.

Indications Fever, slight aversion to *wind-cold*, swollen painful throat, coughing with expectoration of white or yellow sputum, dry mouth and slight thirst, reddened tongue with white or yellow fur, floating and rapid pulse, or slippery and rapid pulse due to affliction form external *wind-heat* and excessive *heat* in the lung; upper respiratory tract infection, tonsillitis and acute bronchitis with above

symptoms.

Usage and dosage Administrated through anus. 1 suppository each time, 3 times a day; appropriate reduction of the dosage for children.

Precaution It should be used as an anal suppository to speed up the absorption.

Strength (1) 1 g per suppository (2) 1.5 g per suppository

Storage Preserved in tightly closed containers below 30℃.

Yinxu Weitong Keli
(阴虚胃痛颗粒)

Yinxu Weitong Granules

Ingredients Radix Glehniae; Radix Ophiopogonis; Caulis Dendrobii; Fructus Toosendan; Rhizoma Polygonati Odorati; Radix Paeoniae Alba; Radix et Rhizoma Glycyrrhizae.

Procedure Decoct the above seven ingredients with water twice, 2 hours for the first time and 1 hour for the second time, filter, combine the filtrate, concentrate to a appropriate density, add 3 times quantity of ethanol, allow to stand. Concentrate the supernatant to a thin extract with a relative density of 1.18-1.22 (50℃). Add 2 portions of sucrose and 0.8 portion of dextrin to 1 portion of the thin extract, to make granules.

Description Pale yellowish-brown to yellowish-brown granules; taste, sweet, slightly bitter.

Identification (1) Macerate 25 g of the granules with 30 ml of petroleum ether (30-60℃) for 1 hour, discard the petroleum ether, add 50 ml of ethanol, macerate for 2 hours, concentrate the supernatant to about 1 ml as the test solution. Decoct 1 g of the Radix et Rhizoma Glycyrrhizae reference drug with water twice. Combine the decoctions, evaporate to dryness, add 5 ml of ethanol, stir to dissolved, filter, and concentrate the filtrate to about 0.5 ml as the reference drug solution. Carry out the method for thin layer chromatography (Appendix Ⅵ B), using silica gel G as the coating substance and a mixture of toluene, ethyl acetate and glacial acetic acid (2 : 2 : 0.1) as the mobile phase. Apply separately 15 μl of the test solution and the reference solution to the plate. After developing and removal of the plate, dry in air, Spray with 10% sulfuric acid in ethanol, heat at 110℃ to the spots clear. The spots in the chromatogram obtained with the test solution correspond in position and colour to the spots in the chromatogram obtained with the reference drug solution.

(2) Dissolve 2 g of the granules in 10 ml of water, stir to dissolve, add 2.5 ml of 2 mol/L solution of hydrochloric acid, heat under reflux for 30 minutes, cool and filter, extract by shaking with 5 ml of chloroform. Evaporate the chloroform extract to about 1 ml as the test solution. Decoct 1 g of Radix Ophiopogonis reference drug with 20 ml of water for 10 minutes, filter, add 2.5 ml of 2 mol/L solution of hydrochloric acid in the same manner as the reference drug solution. Carry out the method for thin layer chromatography (Appendix Ⅵ B), using silica gel G as the coating substance and a mixture of chloroform, ethyl acetate and acetone (8 : 1 : 1) as the mobile phase. Apply separately 2 μl of the test solution and 3 μl of the reference drug solution to the plate. After developing and removal of the plate, dry in air. Spray with 10% sulfuric acid in ethanol, heat to the spots clear. The spots in the chromatogram obtained with the test solution correspond in position and colour to the spots in the chromatogram obtained with the reference drug solution.

Other requirements Comply with the general requirements for granules (Appendix Ⅰ C).

Assay Carry out the method for high performance liquid chromatography (Appendix Ⅵ D)

Chromatographic system and system suitability Use octadecylsilane bonded silica gel as the stationary phase and the mixture of acetonitrile and water (15 : 85) as the mobile phase. As detector a spectrophotometer set at 230 nm. The number of theoretical plates for the column is not less than 4000, calculated with the reference to the peak of paeoniflorin.

Reference solution Dissolve a quantity of paeoniflorin CRS, accurately weighed, in methanol to prepare a solution containing 25 μg per ml as the reference solution.

Test solution Weigh accurately 2 g of the content of the capsules obtained under the test of weight variation, pulverized to fine powder, to a stopper conical flask. Add accurately 100 ml of water, stopper tightly, weigh accurately, ultrasonicate (power 250 W, frequency 40 kHz) for 10 minutes, allow to cool and weigh accurately again, replenish the lost weight with water, mix well and filter. Discard the initial filtrate, and use the successive filtrate as the test solution.

Procedure Inject accurately 20 μl of the reference solution and the test solution into the column and calculate the content.

It contains not less than 8.0 mg of paeoniflorin ($C_{23}H_{28}O_{11}$) per pack, referred to Radix Paeoniae Alba.

Action To replenish *yin* and invigorate the stomach, and relieve contracture and pain.

Indications Dull burning pain in the epigastrium, dry mouth and tongue, inappetence and retching due to *yin* deficiency of the stomach; chronic gastritis and peptic ulcer with above symptoms.

Usage and dosage 10 g, 3 times a day, taken with boiling water.

Strength 10 g per pack

Storage Preserved in tightly closed containers.

Yiqing Keli
(一清颗粒)

Yiqing Granules

Ingredients Rhizoma Coptidis 165 g; Radix et Rhizoma Rhei 500 g; Radix Scutellariae 250 g.

Procedure Decoct separately the above three ingredients with water for 2 times, 1.5 hours for the first time, and 1 hour for the second time respectively. Combine the decoctions, filter, concentrate in vacuum to a thin extract with a relative densities of 1.25 (70℃) and dry by spraying to powder. To the above three powdered extractives, add a quantity of sucrose and dextrin, mix thoroughly, make granules, dry and pack 125 packs.

Description Yellowish-brown granules; taste, slightly sweet and bitter.

Identification (1) Macerate 4 g of granules in 25 ml of methanol for 2 hours, shake constantly, filter, and evaporate the filtrate to dryness. Dissolve the residue with 10 ml of water, add 1 ml of hydrochloric acid, heat on a water

bath for 30 minutes, and cool immediately. Extract with two 10-ml quantities of chloroform by shaking, combine the chloroform extracts, concentrate to about 1 ml as the test solution. Dissolve a quantity of emodin CRS in chloroform to prepare a solution containing 0.5 mg per ml as the reference solution. Prepare a solution of 0.1 g of Radix et Rhizoma Rhei reference drug in the same manner as the reference drug solution. Carry out the method for thin layer chromatography (Appendix Ⅵ B), using silica gel G mixed with sodium carboxymethylcellulose as the coating substance and the upper layer of a mixture of petroleum ether (60-90℃), ethyl formate and formic acid (15 : 5 : 1) as the mobile phase. Apply separately 5 μl of each of the test solution, the reference drug solution and the reference solution to the plate. After developing and removal of the plate, dry in air. Examine under ultraviolet light at 365 nm. The fluorescent spots in the chromatogram obtained with the test solution correspond in position and colour to the spots in the chromatogram obtained with the reference drug solution and the reference solution. Expose the plate to ammonia vapour, examine in daylight, the spots turn to red.

(2) To 4 g of granules, add 25 ml of methanol and 1-2 drops of hydrochloric acid, ultrasonicate for 20 minutes, filter, concentrate the filtrate on a water bath to about 2 ml as the test solution. Prepare a solution of 0.5 g of Radix Scutellariae in the same manner as the reference drug solution. Dissolve a quantity of baicalin CRS in methanol to prepare a solution containing 1 mg per ml as the reference solution. Carry out the method for thin layer chromatography (Appendix Ⅵ B), using silica gel G mixed with sodium carboxymethylcellulose as the coating substance and a mixture of ethyl acetate, butanone, formic acid and water (5 : 3 : 1 : 1) as the mobile phase. Apply separately 5 μl of each of the test solution, the reference drug solution and the reference solution to the plate. After developing and removal of the plate, dry in air. Spray with 2% ferric chloride in ethanol. The spots in the chromatogram obtained with the test solution corresponds in position and colour to the spots in the chromatogram obtained with the reference drug solution and the reference solution.

(3) Macerate 4 g of granules in 25 ml of methanol for 2 hours, shake constantly, filter, and concentrate the filtrate on a water bath to about 2 ml as the test solution. Heat under reflux 50 mg of Radix Coptidis reference drug with 5 ml of methanol for 15 minutes, filter and dilute to 5 ml with methanol as the reference drug solution. Dissolve a quantity of berberine hydrochloride CRS in methanol to prepare a solution containing 0.5 mg per ml as the reference solution. Carry out the method for thin layer chromatography (Appendix Ⅵ B), using silica gel G containing sodium carboxymethyl cellulose as the coating substance and a mixture of benzene, ethyl acetate, methanol, isopropyl alcohol and water (6 : 3 : 1.5 : 1.5 : 0.3) as the mobile phase, pre-equilibrated with ammonia vapour. Apply separately 1-2 μl of each of the above three solutions to the plate. After developing and removal of the plate, dry in air and examine under ultraviolet light at 365 nm, The yellow fluroscent spots in the chromatogram obtained with the test solution correspond in position and colour to the spots in the chromatogram obtained with reference drug solution and the reference solution.

Other requirements Comply with the general requirements for granules (Appendix Ⅰ C).

Assay Carry out the method for high performance liquid chromatography (Appendix Ⅵ D).

Chromatographic system and system suitability Use octadecylsilane bonded silica gel as the stationary phase and a mixture of methanol and 0.2 mol/L sodium dihydrogen phosphate (adjust to pH 2.7 with phosphoric acid) (42 : 58) as the mobile phase. As detector a spectrophotometer set at 275nm. The number of the theoretical plates of the column is not less than 5000, calculated with reference to the peak of baicalin.

Reference solution Dissolve about 12.5 mg of baicalin CRS with 10 ml of methanol in a 250 ml volumetric flask. Dilute with water to volume and mix well (containing 50 μg of baicalin per ml).

Test solution Weigh accurately 0.75 g of the fine powder of granules, obtained under the test of weight variation and mixed thoroughly and triturated, in a 100 ml volumetric flask. Add 10 ml of methanol and ultrasonicate (power, 250 W; frequency, 50 kHz) for 10 minutes, dilute with water to volume, mix well, centrifuge, use the supernatant as the test solution.

Procedure Inject accurately 10 μl of each of the reference solution and the test solution, respectively, into the column and calculate the content.

It contains not less than 21 mg of baicalin ($C_{21}H_{18}O_{11}$) per pack, referred to Radix Scutellariae.

Action To clear *heat*, purge *fire* to relieve *toxicity*, and resolve stagnant blood, cool blood to arrest bleeding.

Indications Fever, irritability, bloodshot eyes, aphtha, sore throat, swollen and painful gums, constipation, hematemesis, hemoptysis, rhinorrhagia or hemorrhoidal bleeding due to *fire* toxins and *blood-heat*; pharyngitis, gingivitis with above symptoms.

Usage and dosage 7.5 g, 3-4 times a day; taken by mixed with boiled water.

Precaution Appropriate reduction of dosage when diarrhea arises.

Strength 7.5 g per pack

Storage Preserve in tightly closed containers.

Yiqi Yangxue Koufuye (益气养血口服液)

Yiqi Yangxue Mixture

Ingredients Radix et Rhizoma Ginseng 8.3 g; Radix Astragali 83.4 g; Radix Codonopsis 75 g; Radix Ophiopogonis 50 g; Radix Angelicae sinensis 33.3 g; Rhizoma Atractylodis Macrocephalae 33.3 g (stir-baked); Radix Rehmanniae 33.3 g; Radix Polygoni Multiflori Rraeparata Cum Succo Glycines Sotae 30 g; Fructus Schisandrae Chinensis 25 g; Pericarpium Citri Reticulatae 33.3 g; Cortex Lycii 25 g; Cornu Cervi Pantotrichum 1.7 g; Herba Epimedii 50 g.

Procedure Cut Cornu Cervi Pantotrichum into slices, decoct with water for 2 times, 3 hours for each time. Combine the decoctions, filter, concentrate the filtrate to form a thin extract with a relative density of 1.20-1.25 (20℃). Add 3 volumes of ethanol, allow to stand for 24 hours. Filter, recover the ethanol to obtain the reserved extract. Decoct the other 12 ingredients with water for 2 times, 3 hours for the first time and 2 hours for the second time. Combine the decoctions, filter, concentrate the filtrate to form a thin extract with a relative density of 1.19 (20℃). Combine with the above reserved extract, add 133 g of sucrose and 267 g of refined honey, boil for 30 minutes, allow to cool, add 0.5 ml of orange essence, 1 g of ethyl *p*-hydroxybenzoate and a quantity of water to 1000 ml, Stir well and filter.

Description A brownish-yellow to brown liquid; taste, sweet, slightly bitter.

Identification (1) Extract 10 ml of the mixture with three 5-ml quantities of *n*-butanol saturated with water, combine the *n*-butanol extracts and wash with three 5-ml quantities of ammonia TS. Evaporate the *n*-butanol extract to dryness, and dissolve the residue in 1 ml of dilute ethanol TS, and apply to a column (1-1.5 cm in internal diameter) packed with neutral aluminium oxide (100-120 mesh, 2 g). Elute with 50 ml of 40% ethanol, and collect the eluate. Evaporate to dryness and dissolve the residue in 1 ml of water, Apply to a column (1.2-1.5 cm in internal diameter, 12 cm in length) packed with D101 coarse bore resin. Elute successively with 20 ml of water, 30 ml of 40% ethanol, discard the water and 40% ethanol eluates, elute with 50 ml of 70% ethanol, collect the 70% ethanol eluate. Evaporate to dryness and dissolve the residue in 1 ml of methanol as the test solution. Dissolve a quantity of Astragaloside Ⅵ CRS in methanol to prepare a solution containing 0.5 mg per ml as the reference solution. Carry out the method for thin layer chromatograph (Appendix Ⅵ B), using silica gel G as the coating substance and the lower layer of a mixture of chloroform, methanol and water (13 : 7 : 2), standing below 10℃, as the mobile phase. Apply separately 4 μl of the above test solution and 5 μl of the reference solution to the plate. After developing and removal of the plate, dry in air. Spray with 10% sulfuric acid in ethanol, and heat at 105℃ to the spots clear. Examine in daylight and under ultraviolet light at 365 nm. The spot or fluorescent spot in the chromatogram obtained with the test solution corresponds in position and colour to the spot in the chromatogram obtained with the reference solution.
(2) Transfer 10 ml of the mixture into a separator, wash with three 5-ml quantities of cyclohexane. Extract with three 5-ml quantities of ethyl acetate, combine the ethyl acetate extracts, evaporate to dryness. Dissolve the residue in 1 ml of the methanol as the test solution. Decoct 1 g of Pericarpium Citri Reticulatae reference drug with 30 ml of water for 1 hour and filter. Concentrate the filtrate to 10 ml, prepare a solution in the same manner as the reference drug solution. Carry out the method for thin layer chromatography (Appendix Ⅵ B), using silica gel G as the coating substance and the mixture of ethyl acetate, methanol, water and pyridine (100 : 17 : 13 : 5) as the mobile phase. Apply separately 4 μl of each of the above two solutions to the plate. After developing about 3 cm and removal of the plate, dry in air, and then use the upper layer of a mixture of toluene, ethyl acetate, formic acid and water (20 : 10 : 1 : 1) as the mobile phase, after developing 8 cm and removal of the plate, dry in air. Spray with aluminum trichloride TS. Examine under ultraviolet light at 365 nm. The fluorescent spots in the chromatogram obtained with the test solution correspond in position and colour to the spots in the chromatogram obtained with the reference drug solution.

Relative density 1.15-1.19 (Appendix Ⅶ A).

pH value 3.8-5.0 (Appendix Ⅶ G).

Other requirements Comply with the general requirements for mixtures (Appendix Ⅰ J).

Assay Carry out the method for high performance liquid chromatography (Appendix Ⅵ D)

Chromatographic system and system suitability Use octadecylsilane bonded silica gel as the stationary phase and a mixture of acetonitrile and 0.05% solution of phosphoric acid (26 : 74) as the mobile phase. As detector a spectrophotometer set at 270 nm. The number of the theoretical plates of the column is not less than 1500, calculated with the reference to the peak of icariine.

Reference solution Dissolve a quantity of icariine CRS, accurately weighed, in methanol to prepare a solution containing 0.1 mg per ml.

Test solution Measure accurately 3 ml of the mixture, place in a 10 ml volumetric flask, add a quantity of methanol, and ultrasonicate (power, 250 W; frequency, 33 kHz) for 30 minutes, allow to cool, and dilute with methanol to volume, mix well, and filter the supernatant, use the successive filtrate as the test solution.

Procedure Inject accurately 10μl of the reference solution and 20 μl of the test solution into the column, and calculate the content.
It contains not less than 0.12 mg of icariine ($C_{33}H_{40}O_{15}$) per ml, referred to Herba Epimedii.

Action To replenish *qi* and nourish blood.

Indications Shortness of breath and palpitation, lusterless complexion, weakness and lassitude due to a *deficiency* of *qi* and blood.

usage and dosage 15-20 ml, 3 times a day.

Strength 10 ml per phvial

Storage Preserve in tightly closed containers.

Yishenling Keli
(益肾灵颗粒)

Yishenling Granules

Ingredients Fructus Lycii 200 g; Fructus Ligustri Lucidi 300 g; Radix Aconiti Lateralis Praeparata 20 g; Semen Euryales (stir-baked) 300 g; Semen Plantaginis (stir-fried) 100 g; Fructus Psoraleae (stir-baked) 200 g; Fructus Rubi 200 g; Fructus Schisandrae Chinensis 50 g; Fructus Mori 200 g; Semen Astragali Complanati 250 g; Semen Allii Tuberosi (stir-baked) 100 g; Herba Epimedii 150 g; Fructus Rosae Laevigatae 200 g.

Procedure Decoct the above thirteen ingredients with water twice, each for 2 hours, combine the decoctions, filter, allow to stand for 12 hours, filter the supernatant, concentrate the filtrate to a thin extract with a relative density of 1.18 (80℃), add a quantity of sucrose powder, mix thoroughly to make granules and dry at a lower temperature, make to 2500 g of granules. Or concentrate the filtrate to a thick extract with a relative density of 1.35 (50℃), add a quantity of dextrin and stevioside, mix thoroughly, dry and make to 1000 g of granules.

Description Yellowish-brown granules; taste, sweet, slightly bitter.

Identification Heat under reflux 10 g or 4 g (without sucrose) of the granules, ground to fine powder, with 25 ml of ethanol for 30 minutes. Filter and evaporate the filtrate to dryness, dissolve the residue in 1 ml of ethyl acetate as the test solution. Dissolve a quantity of psoralen CRS and isopsoralen CRS separately in ethyl acetate to produce two solutions each containing 1 mg per ml as the reference solutions. Carry out the method for thin layer chromatography (Appendix Ⅵ B), using silica gel G mixed with sodium carboxymethylcellulose as the coating substance and a mixture of petroleum ether (60-90 ℃) and ethyl acetate (2 : 1) as the mobile phase. Apply separately 5 μl of each of the three solutions to the plate. After developing and removal of the plate, dry in air, spray with 10% sodium hydroxide in ethanol, examine under ultraviolet light at 365 nm. The fluroscent spots

in the chromatogram obtained with the test solution correspond in position and colour to the spots in the chromatogram obtained with the reference solutions.

Other requirements Comply with the general requirements for granules (Appendix Ⅰ C).

Action To warm *kidney-yang* and reinforce the kidney.

Indications Impotence, premature ejaculation, seminal emission or asthenospermia due to a *deficiency* of *kidney-qi* and *yang*.

Usage and dosage 1 pack, 3 times a day, taken after dissolved in boiling water.

Strength (1) 20 g per pack (2) 8 g per pack (without sucrose)

Storage Preserve in tightly closed containers.

Yixian Wan
(医痫丸)

Yixian Pills

Ingredients Rhizoma Typhonii 40 g; Rhizoma Arisaematis (processed) 80 g; Rhizoma Pinelliae (processed) 80 g; Fructus Gleditsiae Abnormalis 400 g; Bombyx Batryticatus (stir-baked) 80 g; Zaocys (processed) 80 g; Scolopendra 2 g; Scorpio 16 g; Alumen 120 g; Realgar 12 g; Cinnabaris 16 g.

Procedure Levigate separately Cinnabaris and Realgar to very fine powder. Pulverize the other nine ingredients to fine powder, and triturate with the above powders, sift and mix thoroughly. Make pills with water and dry.

Description Brown to dark brown watered pills; taste salty, astringent and pungent.

Identification Microscopical: Fibre bundles pale yellow, surrouned by parenchymatous cells containing prisms of calcium oxalate and a few clusters, forming crystal fibres, and often accompanied by subsquare sclerenchymatous cells. Fragments of body walls colourless, covered with minute hyphae. Fragments of body walls pale yellow to yellow, with reticulate striations and rounded alveoli, sometimes showing brown setae. Irregular pieces golden-yellow or orange-yellow, lustrous. Irregular fine granules dark brownish-red, lustrous, with dark black edge.

Other requirements Comply with the general requirements for pills (Appendix Ⅰ A).

Action To expel *wind* and resolve *phlegm*, and relieve epilepsy to stop convulsion.

Indications Epilepsy due to *phlegm* accumulated in the head with manifestations of convulsion, loss of consciousness, upward pulling of eyes and slobbering.

Usage and dosage 3 g, 2-3 times a day; appropriate reduction of the dosage for children.

Precaution Overdosage is forbidden as it contain poisonous ingredients; It is forbidden to prescribe to pregnant women.

Storage Preserve in tightly closed containers.

Yixin Tongmai Keli
(益心通脉颗粒)

Yixin Tongmai Granules

Ingredients Radix Astragali; Radix et Rhizoma Ginseng; Radix Glehniae; Radix Scrophulariae; Radix et Rhizoma Salviae Miltiorrhizae; Rhizoma Chuanxiong; Radix Curcumae; Radix et Rhizoma Glycyrrhizae Praeparata Cum Melle.

Procedure Heat under reflux Radix et Rhizoma Salviae Miltiorrhizae and Radix et Rhizoma Ginseng in 75% ethanol 1 hour, filter, recover the ethanol from the filtrate in vacuum, then concentrate to a thin extract with a relative density of 1.20-1.30 (50℃). Decoct the residue and the other 6 ingredients with water 2 times, 1.5 hour for each time, combine the decoctions and filter. Concentrate in vacuum to a thin extract with a relative density of 1.20-1.30 (50℃). Combine the above two thin extract, dry it in vacuum and pulverize to fine powder, mix well. Add a quantity of 75% ethanol, make granules and dry, make to 1000 g.

Description Brown to dark brown granules; taste, sweet and slightly bitter.

Identification (1) To 5 g, triturate to fine powder, add 20 ml of ethanol, ultrasonicate for 5 minutes, and filter. Evaporate the filtrate to dryness. Dissolve the residue in 1 ml of methanol as the test solution. Prepare a solution of 0.5 g of Rhizoma Chuanxiong reference drug in the same manner as the reference drug solution. Dissolve a quantity of tanshinone ⅡA CRS in methanol to produce a solution containing 1 mg per ml as the reference solution. Carry out the method for thin layer chromatography (Appendix Ⅵ B), using silica gel G mixed with sodium carboxymethylcellulose as the coating substance, and the mixture of toluene and ethyl acetate (9.5 : 0.5) as the mobile phase. Apply separately 10 μl of each of the three solutions to the plate. After developing and removal of the plate, dry in air. Examine in daylight, the spots in the chromatogram obtained with the test solution correspond in position and colour to the spot in the chromatogram obtained with the reference solution. Examine under ultraviolet light at 365 nm, the fluorescent spots in the chromatogram obtained with the test solution correspond in position and colour to the spots in the chromatogram obtained with the reference drug solution.
(2) Heat under reflux 10 g, ground to fine powder, with 50 ml of methanol for 30 minutes, and filter. Evaporate the filtrate to dryness, and dissolve the residue in 30 ml of water. Transfer the solution to a separating funnel, extract with 30 ml of ether by shaking and discard the ether solution. Extract the aqueous solution with two 40-ml quantities of *n*-butanol saturated with water by shaking. Combine the *n*-butanol extracts, wash with 40 ml of 0.1 mol/L solution of sodium hydroxide, wash again with water saturated with *n*-butanol until the solution become neutral. Separate *n*-butanol extract and evaporate to dryness. Dissolved the residue in 5 ml of water, and apply it to a D101 macroporous adsorption resin column (0.9 cm in inner diameter, 12 cm in length). Elute with 50 ml of water, 50 ml of 30% ethanol and 70% ethanol separately, collect the 70% ethanolic eluate and evaporate to dryness. Dissolve the residue in 1 ml of methanol as the test solution. Dissolve separately a quantity of ginsenoside Rg_1 CRS and astragaloside Ⅳ CRS in methanol to produce two solutions each containing 1 mg per ml as the reference solutions. Carry out the method for thin layer chromatography (Appendix Ⅵ B), using silica gel G mixed with sodium carboxymethyl cellulose as the coating substance, and the lower layer of a mixture of chloroform, methanol and water (13 : 7 : 2, standing below 10℃) as the mobile phase. Apply separately 10 μl of the test solution and 4 μl of the two reference solutions to the plate. After developing and removal of the plate, dry in air. Spray with 10% sulfuric acid in ethanol and heat at 105℃ to the spots clear. The spot in the chromatogram obtained with the test solution corresponde in position and colour to the spot in the chromatogram obtained with the reference solution.

Other requirements Comply with the general requirements for granules (Appendix Ⅰ C).

Assay Carry out the method for high performance liquid chromatography (Appendix Ⅵ D)

Chromatographic system and system suitability Use Octadecylsilane bonded silica gel as the stationary phase and a mixture of methanol and water (76 : 24) as the mobile phase. As detector a spectrophotometer set at 268 nm. The number of theoretical plates of the column is not less than 4500, calculated with the reference to the peak of tanshinone ⅡA.

Reference solution Dissolve a quantity of tanshinone ⅡA CRS, accurately weighed and place in a brown volumetric flask, add methanol to produce a solution containing 20 μg per ml.

Test solution Weigh accurately about 5 g of the mixed contents, obtained under the test of weight variation and ground to fine powder, place in a brown conical flask with stopper, add 50 ml of the mixture of dichloromethane and methanol (1 : 1), stopper tightly, and ultrasonicate (power 250 W, frequency 33 kHz) for 30 minutes, filter. Place the filtrate in a 50 ml brown volumetric flask, wash the container and the filter apparatus with the mixture of dichloromethane and methanol (1 : 1), combine the washings to the same volumetric flask, dilute with the same solvent to volume and shake well. Transfer 20 ml, measured exactly, evaporate to dryness. Dissolve the residue with methanol to a 5 ml brown volumetric flask and dilute to the volume, shake well and filter, use the successive filtrate as the test solution.

Procedure Inject accurately 10 μl of each of the reference solution and the test solution into the column, and calculate the content.
It contains not less than 0.4 mg of tanshinone ⅡA ($C_{19}H_{18}O_3$) per pack, referred to Radix et Rhizoma Salviae Miltiorrhizae.

Action To replenish *qi* and nourish *yin*, and promote blood circulation to dredge meridians.

Indications Obstruction of *qi* in the chest due to a deficiency of *qi* and *yin* and blood stasis in meridians, with manifestations of constriction in the chest and heart pain, palpitation and shortness of breath, lassitude and sweating, and dry throat; pectoris angina in coronary heart disease with above symptoms.

Usage and dosage 1 pack, 3 times a day, taken after mixed with boiled water. 4 weeks making a course of treatment, or follow doctor's advice.

Strength 10 g per pack

Storage Preserve in tightly closed containers.

Yiyuan San
(益元散)

Yiyuan Powder

Ingredients Talcum 600 g; Radix et Rhizoma Glycyrrhizae 100 g; Cinnabaris 30 g.

Procedure Levigate Cinnabaris to very fine powder and pulverize the other two ingredients to fine powder, triturate with Cinnabaris powder, sift and mix thoroughly.

Description A pale pink powder, unctuous to the touch; taste, sweet.

Identification (1) Microscopical: Irregular fragments colourless, with scars of stripping in layers. Fibre bundles surrounded by parenchymatous cells containing prisms of calcium oxalate, forming crystal fibres. Irregular fine granules dark brownish-red, lustrous, dark black at the edge.
(2) Comply with the test of Identification (2) described under Liuyi Powder, using 2 g of the powder.

Other requirements Comply with the general requirements for powders (Appendix Ⅰ B).

Assay Heat gently about 2.5 g of the powder, accurately weighed, with 10 ml of sulfuric acid and 1.5 g of potassium nitrate in a 250 ml flask to dissolve Cinnabaris and cool. Add 10 ml of 1% nitric acid solution, shake well, cool, filter through a sinter-glass funnel, wash the funnel and flask with 40 ml of 1% nitric acid solution in several portions, combine the washings with the filtrate, add dropwise 1% potassium permanganate solution until the pink colour persists for 2 minutes, add dropwise 2% ferrous sulfate solution until the pink colour disappears. Add 2 ml of ammonium ferric sulfate IS, and titrate with ammonium thiocyanate (0.05 mol/L) VS. Each ml of ammonium thiocyanate (0.05 mol/L) VS is equivalent to 5.815 mg of HgS.
It contains not less than 3.5 per cent and no more than 4.2 per cent of HgS, referred to cinnabaris.

Action To clear *summer-heat* and drain *dampness*.

Indications Feverish sensation of the body, restlessness, thirst with desire for drinks, concentrated urine due to affliction from *summer-heat* and *dampness*.

Usage and dosage 6 g, 1-2 times a day, taken after mixed with water or decocted.

Storage Preserve in well closed containers, protect from moisture.

Yuanhu Zhitong Pian
(元胡止痛片)

Yuanhu Zhitong Tablets

Ingredients Rhizoma Corydalis (processed with vinegar) 445 g; Radix Angelicae Dahuricae 223 g.

Procedure Pulverize 166 g of Radix Angelicae Dahuricae to fine powder. Pulverize the remains of Radix Angelicae Dahuricae and Rhizoma Corydalis to coarse powder. Macerate the coarse powder with 3 times volume of 60% ethanol for 24 hours, heat under reflux for 3 hours and collect the extract. To the residue add two times volume of 60% ethanol, heat under reflux again for 2 hours and collect the extract. Combine the extracts and filter. Concentrate the filtrate to a thick extract, add the above fine powder, make to granules, compress into 1000 tablets and coat with sugar or film.

Description Sugar or film coated tablets, with brown core; odour, aromatic; taste, bitter.

Identification (1) To 10 tablets, removed the coats, add 50 ml of methanol, ultrasonicate for 30 minutes, and filter. To the filtrate add 5 g of aluminium oxide activated, shake for several minutes, and filter. Evaporate the filtrate to dryness, dissolve the residue in water, alkalify with concentrated ammonia TS, and then extract with three 10-ml quantities of ether with shaking. Combine the ether extracts and evaporate to dryness, dissolve the residue in 1 ml of methanol as the test solution. To 1 g of Rhizoma Corydalis reference drug add 50 ml of methanol, ultrasonicate for 30

minutes, filter, and prepare in the same manner, beginning at the words "Evaporate the filtrate to dryness", as the reference drug solution. Carry out the method for thin layer chromatography (Appendix Ⅵ B), using silica gel G mixed with 1% solution of sodium hydroxide as the coating substance and a mixture of *n*-hexane, chloroform and methanol (7.5 : 4 : 1) as the mobile phase. Apply separately 2-3 μl of each of the two solutions to the plate. After developing in a chamber pre-equilibrated with the mobile phase for 1 hour and removal the plate, dry in air. Expose the plate to iodine vapour until the spots clear. The spots in the chromatogram obtained with the test solution correspond in position and colour to the spots in the chromatogram obtained with the reference drug solution. Expel iodine completely from the plate and examined under ultraviolet light at 365 nm. The fluorescent spots in the chromatogram obtained with the test solution correspond in position and colour to the spots in the chromatogram obtained with the reference drug solution.

(2) To 10 tablets, removed the coats and pulverized, add 20 ml of petroleum ether (60-90℃), ultrasonicate for 20 minutes, and filter. Evaporate the filtrate to about 1 ml as the test solution. To 0.1 g of Radix Angelicae Dahuricae reference drug add 1 ml of petroleum ether (60-90℃), macerate for 30 minutes with constantly shaking, allow to stand, and use the supernatant as the reference drug solution. Carry out the method for thin layer chromatography (Appendix Ⅵ B), using silica gel GF_{254} as the coating substance and a mixture of petroleum ether (60-90℃) and ether (3 : 2) as the mobile phase. Apply separately 5 μl of each of the two solutions to the plate. After developing and removal of the plate, dry in air. The fluorescent spots, examined under ultraviolet light at 365 nm, and the spots, examined under ultraviolet light at 254 nm, in the chromatogram obtained with the test solution correspond in position and colour to the spots in the chromatogram obtained with the reference drug solution.

Other requirements Comply with the general requirements for tablets (Appendix Ⅰ D).

Assay Pulverize 40 tablets, removed coats and weighed accurately, to fine powder, weigh accurately 4 g, add 50 ml of methanol, and ultrasonicate for 30 minutes. Filter, wash the flask and filter with a small quantities of methanol, combine the filtrate and washings, and recover the solvent to dryness. Dissolve the residue with 30 ml of water, adjust to alkalinity with concentrated ammonia TS, extract with five 20-ml quantities of ether, combine the extracts, and wash with two 20-ml quantities of water. To the ether layer, recover the solvent, dissolve the residue with methanol, transfer to a 5 ml volumetric flask, and dilute to the volume with methanol as the test solution. Dissolve a quantity of tetrahydropalmatine CRS, accurately weighed, in methanol to produce a solution containing 0.5 mg per ml as the reference solution. Carry out the method for thin layer chromatography (Appendix Ⅵ B), using silica gel G prepared with 1% solution of sodium hydroxide as the coating substance and a mixture of *n*-hexane, dichloromethane, methanol and concentrated ammonia TS (15 : 8 : 1.7 : 0.05) as the mobile phase. Apply accurately 5-10 μl of the test solution, 1 μl and 6 μl of the reference solution to the plate alternatively. After developing and removal of the plate, dry it in air, expose the plate to iodine vapour for 5-10 minutes until spot distinct, and expel absorbed iodine. Carry out the method for thin layer chromatography (Appendix Ⅵ A, thin layer chromatographic scanning method), scan at the wavelength of $\lambda_S = 346$ nm, $\lambda_R = 200$ nm. Measure the integration values of the absorbance from the test solution and the reference solution respectively, and calculate the content.

It contains not less than 20 μg of tetrahydropalmatine ($C_{21}H_{25}NO_4$) per tablet, referred to Rhizoma Corydalis.

Action To regulate *qi* flow and promote blood circulation to kill pain.

Indications Stomachache, hypochondriac pain, headache and dysmenorrhea due to stagnation of *qi* and blood.

Usage and dosage 4-6 tablets, 3 times a day, or follow doctor's advice.

Storage Preserve in tightly closed containers.

Yueju Wan
(越鞠丸)

Yueju Pills

Ingredients Rhizoma Cyperi (processed with vinegar) 200 g; Rhizoma Chuanxiong 200 g; Fructus Gardeniae (stir-baked) 200 g; Rhizoma Atractylodis (stir-baked) 200 g; Massa Medicata Fermentata (stir-baked) 200 g.

Procedure Pulverize the above five ingredients to fine powder, sift, mix thoroughly, make pills with water and dry.

Description Dark brown to brown watered pills; odour, aromatic; taste, slightly astringent and bitter.

Identification (1) Microscopical: Secretory cells subrounded, containing pale yellowish-brown to reddish-brown secretions, surrounded by radially arranged cells. Needle crystals of calcium oxalate minute, 10-32 μm longer irregularly filling in parenchymatous cells. Stone cells of testa yellow or pale brown, long-polygonal, rectangular or irregular, frequently broken, walls thickened, with large rounded pits, lumina brownish-red.

(2) Heat under reflux 3 g of the pills, ground to powder, with 30 ml of ether for 1 hour. Allow to cool, filter and keep the residue for further use, expel ether of the filtrate and disslove the residue in 1 ml of ethyl acetate as the test solution. Prepare a solution of 0.5 g of Rhizoma Atractylodis reference drug in the same manner as the reference drug solution. Carry out the method for thin layer chromatography (Appendix Ⅵ B), using silica gel G as the coating substance and petroleum ether (60-90℃) as the mobile phase. Apply separately 5-10 μl of each of the two solutions to the plate. After developing and removal of the plate, dry in air, and spray with 5% solution of *p*-dimethylaminobenzaldehyde in 10% sulfuric acid in ethanol, and heat to the spots clear. The dark green colour spot in the chromatogram obtained with the test solution corresponds in position and colour to the spot in the chromatogram obtained with the reference drug solution.

(3) Prepare a solution of 0.5 g of Rhizoma Chuanxiong reference drug in the same manner described under Identification test (2), as the reference drug solution. Carry out the method for thin layer chromatography (Appendix Ⅵ B), using silica gel G as the coating substance and a mixture of *n*-hexane and ethyl acetate (9 : 1) as the mobile phase. Apply separately 5 μl of each of the test solution obtained under Identification (2) and the above reference drug solution to the plate. After developing and removal of the plate, dry in air, and examine under ultraviolet light at 365 nm. The fluorescent spots in the chromatogram obtained with the test solution correspond in position and colour to the spots in the chromatogram obtained with the reference drug solution.

(4) Heat under reflux drug residue extracted with ether obtained under Identification (2) with 30 ml of ethyl acetate for 1 hour, cool, filter and evaporate the filtrate to dryness.

Dissolve the residue in 3 ml of methanol, filter and use the filtrate as the test solution. Dissolve geniposide CRS in methanol to produce a solution containing 1 mg per ml as the reference solution. Carry out the method for thin layer chromatography (Appendix Ⅵ B), using silica gel G as the coating substance and a mixture of ethyl acetate, acetone, formic acid and water (20 : 14 : 4 : 1) as the mobile phase. Apply separately 5 μl of each of the two solutions to the plate. After developing and removal of the plate, dry in air, and spray with 10% sulfuric acid in ethanol, heat at 105℃ to the spots clear. The spot in the chromatogram obtained with the test solution corresponds in position and colour to the spot in the chromatogram obtained with the reference solution.

Other requirements Comply with the general requirments for pills (Appendix Ⅰ A).

Assay Carry out the method for high performance liquid chromatography (Appendix Ⅵ D).

Chromatographic system and system suitability Use octadecylsilane bonded silica gel as the stationary phase and a mixture of acetonitrile, water and phosphoric acid (9 : 91 : 0.1) as the mobile phase. As detector a spectrophotometer set at 240 nm. The number of theoretical plates of the column is not less than 3000, calculated with the reference to the peak of geniposide.

Reference solution Dissolve a quantity of geniposide CRS, weighed accurately, in 50% methanol to prepare a solution containing 25 μg per ml.

Test solution Weigh accurately 0.1 g of the pills, pulverized to fine powder, in a stopper conical flask, add accurately 50 ml of 50% methanol, stopper, and weigh. Ultrasonicate (power 150 W, frequency 25 kHz) for 30 minutes, stand to cool, weigh again, and replenish the lost weight with 50% methanol. Mix well, filter, and use the successive filtrate as the test solution.

Procedure Inject accurately 20 μl of each of the reference solution and the test solution into the column, and calculate the content.

It contains not less than 5.0 mg of geniposide ($C_{17}H_{24}O_{10}$) per gram, referred to Fructus Gardeniae.

Action To regulate *qi* flow to alleviate stagnation, and soothe the *middle-energizer* and relieve epigastric distension.

Indications Fullness and constriction in the chest, abdominal distension, retention of undigested food, belching and casting up of gastric acid.

Usage and dosage 6-9 g, twice a day.

Storage Preserve in well closed containers, protected from moisture.

Yupingfeng Koufuye (玉屏风口服液)

Yupingfeng Mixture

Ingredients Radix Astragali 600 g; Radix Saposhnikoviae 200 g; Rhizoma Atractylodis Macrocephalae (stir-baked) 200 g.

Procedure Break Radix Saposhnikoviae to pieces, and distil volatile oil, collect the aqueous solution in a separate container. Decoct the drug residue of distillation, Radix Astragali and Rhizoma Atractylodis Macrocephalae with water twice, 1.5 hours for the first time and 1 hour for the second. Combine the decoctions, filter, concentrate the filtrate to a appraprate amount and precipitate with a quantity of ethanol. Recover ethanol from the supernatant in vacuum, stir well with water, allow to stand, filter the supernatant and concentrate. Prepare a syrup with 400 g of sucrose, mix with the above solution, and add the volatile oil and the above aqueous solution. Make up to 1000 ml, stir well, filter, pack and sterilize.

Description A brownish-red to brown liquid, taste, sweet, slightly bitter and astringent.

Identification (1) Extract 10 ml by shaking with three 20-ml quantities of *n*-butanol saturated with water. Combine the *n*-butanol extracts, wash with three 20-ml quantities of ammonia TS. Evaporate the *n*-butanol extract to dryness, and dissolve the residue in 1 ml of methanol as the test solution. Dissolve a quantity of astragaloside Ⅳ CRS in methanol to produce a solution containing 1 mg per ml as the reference solution. Carry out the method for thin layer chromatography (Appendix Ⅵ B), using silica gel G as the coating substance and the lower layer of a mixture of chloroform, methanol and water (13 : 7 : 2), stood below 10℃, as the mobile phase. Apply separately 2-4 μl of each of the two solutions to the plate. After developing and removal of the plate, dry in air, spray with 10% sulphuric acid in ethanol and heat at 105℃ to the spots clear. The spot in the chromatogram obtained with the test solution corresponds in position and colour to the spot in the chromatogram obtained with the reference solution. Examine under ultraviolet light at 365 nm, the fluorescent spot in the chromatogram obtained with the test solution corresponds in position and colour to the spot in the chromatogram obtained with the reference solution.

(2) Extract 20 ml of the mixture with two 25-ml quantities of petroleum ether (30-60℃), combine the extracts, evaporate the extract to dryness, and dissolve the residue in 1 ml of methanol as the test solution. Decoct 2 g of Radix Atractylodis Macrocephalae reference drug with 50 ml of water for 30 minutes, stand to cool, filter, and treat the filtrate to prepare a solution in the same manner as the reference drug solution. Carry out the method for thin layer chromatography (Appendix Ⅵ B), using silica gel G as the coating substance and a mixture of cyclohexane and ethyl acetate (7 : 3) as the mobile phase. Apply separately 5 μl of each of the two solutions to the plate. After developing and removal of the plate, dry in air, spray with 5% solution of *p*-diethylaminobenzaldehyde in 10% sulfuric acid of ethanol, heat at 105℃ to spots clear. The spots in the chromatogram obtained with the test solution correspond in position and colour to the spots in the chromatogram obtained with the reference drug solution. Examine under ultraviolet light at 365 nm, the florescent spots in the chromatogram obtained with the test solution correspond in position and colour to the spots in the chromatogram obtained with the reference drug solution.

(3) Dilute 1 ml of the mixture with methanol to 10 ml, mix well, centrifuge, and use the supernatant as the test solution. Dissolve a quantity of 5-*O*-methylvisammioside CRS in methanol to produce a solution containing 60 μg per ml as the reference solution. Carry out the method for high performance liquid chromatography (Appendix Ⅵ D), using octadecylsilane bonded silica gel as the stationary phase and a mixture of methanol and water (35 : 65) as the mobile phase. As detector a spectrophotometer set at 254 nm. Inject 10 μl of each of the reference solution and the test solution into the column, the retention time of the peak in the chromatogram obtained with the test solution correspond with that in the chromatogram obtained with the reference solutions.

Relative density Not less than 1.16 (Appendix Ⅶ A).

pH value 4.0-5.5 (Appendix Ⅶ G).

Other requirements Comply with the general requirements for mixtures (Appendix Ⅰ J).

Assay Carry out the method for high performance liquid chromatography (Appendix Ⅵ D).

Chromatographic system and system suitability Use octadecylsilane bonded silica gel as the stationary phase and a mixture of acetonitrile and water (35 : 65) as the mobile phase. Use an evaporative light scattering detector. The number of theoretical plates of the column is not less than 3000, calculated with the reference to the peak of astragaloside Ⅳ.

Reference solution Dissolve a quantities of astragaloside Ⅳ CRS, weighed accurately, in methanol to prepare a solution containing 0.4 mg per ml.

Test solution Extract 20 ml of the mixture, measured accurately, with five 25-ml quantities of *n*-butanol saturated with water, combine the extract, and wash with three 20-ml quantities of ammonia TS. Recover the solvent, dissolve the residue in methanol, transfer to a 10 ml volumetric flask, and dilute with methanol to volume. Mix well, centrifuge, and use the supernatant as the test solution.

Procedure Inject accurately 5 μl, 20 μl of the reference solution and 10 μl of the test solution into the column, determine and calculate the content, using a calibration equation of logarithm alteration of two external standards. It contains not less than 0.12 mg of astragaloside Ⅳ ($C_{41}H_{68}O_{14}$) per ml, referred to Radix Astragali.

Action To replenish *qi* to strengthen the superficies and check sweating.

Indications Spontaneous sweating and aversion to *wind*, and pallar due to exterior deficiency, or weak patients who are susceptible to wind.

Usage and dosage 10 ml, 3 times a day.

Strength 10 ml per phial

Storage Preserve in tightly closed containers, stored in a cool and dark place.

Yuzhen San
(玉真散)

Yuzhen Powder

Ingredients Rhizoma Typhonii 600 g; Radix Saposhnikoviae 50 g; Radix Angelicae Dahuricae 50 g; Rhizoma Arisaematis 50 g; Rhizoma Gastrodiae 50 g; Rhizoma et Radix Notopterygii 50 g.

Procedure Pulverize the above six ingredients to fine powder, sift and mix well.

Description A yellowish-white to pale yellow powder; odour, aromatic; taste, numb and pungent.

Identification Microscopical: Compound starch granules consisting of 8-12 components. Raphides of calcium oxalate up to 136 μm long, mostly occurring in mucilage cells. Stone cells yellowish-green, elongated ovoid, elongated rounded or subrectangular, with relatively thickened walls and distinct pit-canals. Sclerenchymatous cells polygonal or elongated polygonal, 70-180 μm in diameter, with thickened and slightly lignified walls, distinctly pitted. Vittae containing brownish-yellow secretion, about 100 μm in diameter.

Other requirements Comply with the general requirements for powders (Appendix Ⅰ B).

Action To expel *wind* to relieve convulsion and relieve *toxicity*.

Indications Tetanus due to incised wound accompanied by *wind* with manifestations of muscular spasms, tic of hands and feet or traumatic injuries.

Usage and dosage 1-1.5 g or follow doctor's advice; appropriate quantity for topical application.

Precaution Contraindicated for pregnant women.

Storage Preserve in well closed containers, protected from moisture.

Zaizao Shengxue Pian
(再造生血片)

Zaizao Shengxue Tablets

Ingredients Semen Cuscutae (processed with wine); Radix et Rhizoma Ginseng Rubra; Caulis Spatholobi; Colla Corii Asini; Radix Angelicae Sinensis; Fructus Ligustri Lucidi; Radix Astragali; Herba Leonuri; Radix Rehmanniae Praeparata; Radix Paeoniae Alba; Radix Polygoni Multiflori Praeparata Cum Succo Glycines Sotae; Herba Epimedii; Rhizoma Polygonati (processed with wine); Cornu Cervi Pantotrichum (burn away the soft hairs); Radix Codonopsis; Radix Ophiopogonis; Herba Agrimoniae; Rhizoma Atractylodis Macrocephalae (stir-baked); Fructus Psoraleae (processed with salt water); Fructus Lycii; Herba Ecliptae.

Procedure Smash Herba Leonuri, Herba Ecliptae, Herba Agrimoniae, Caulis Spatholobi, Semen Cuscutae, Rhizoma Polygonati, Radix Rehmanniae Praeparata, Fructus Ligustri Lucidi, Radix Ophiopogonis, Radix Astragali and Herba Epimedii to small piece. Decoct with water three times, 3 hours for the first time, 2 hours for the second time and 1 hour for the third time. Filter and combine the filtrate, concentrate to a thick extract. Pulverize Radix et Rhizoma Ginseng Rubra, Cornu Cervi Pantotrichum, Radix Angelicae Sinensis, Radix Polygoni Multiflori Praeparata Cum Succo Glycines Sotae, Radix Codonopsis, Fructus Lycii, Fructus Psoraleae, Colla Corii Asini, Radix Paeoniae Alba and Rhizoma Atractylodis Macrocephalae to fine powder, sift. Mix well with the above thick extract, dry and pulverize, sift and make granules, dry. Add a quantity of excipients, compress into 1000 tablets and coat with sugar.

Description Sugar coated tablets with brownish-yellow or blackish-brown core, odour, slight; taste, bitter and astringent slightly.

Identification (1) To 40 tablets, removed the coats, pulverized to powder, add 80 ml of chloroform, ultrasonicate for 30 minutes, and filter, keep the residue for further use, evaporate the filtrate to dryness, and dissolve the residue in 1 ml of methanol as the test solution. Prepare a solution of 1 g of Radix Angelicae Sinensis reference drug and 30 ml of chloroform in the same manner as the reference drug solution. Carry out the method for thin layer chromatography (Appendix Ⅵ B), using silica gel G as the coating substance and the mixture of *n*-hexane and ethyl acetate (4 : 1) as the mobile phase. Apply separately 2 μl of the test solution and the reference solution to the plate. After developing and removal of the plate, dry in air, and examine under ultraviolet light at 365 nm. The fluorescent spots in the chromatogram obtained with the test solution correspond in position and colour to the fluorescent spots in the chromatogram obtained with the reference drug solution.

(2) To 1 g of Fructus Psoraleae reference drug, add 30 ml of chloroform, ultrasonicate for 30 minutes, cool and filter, evaporate the filtrate to dryness, and dissolve the residue in 1 ml of methanol as the reference drug solution. Dissolve psoralen and isopsoralen CRS in methanol to produce a mixture containing 1 mg of each per ml as the reference solution. Carry out the method for thin layer chromatography (Appendix Ⅵ B), using silica gel G as the coating substance and the mixture of *n*-hexane and ethyl acetate (4 : 1) as the mobile phase. Apply separately 2 μl of each of the test solution obtained under Identification (1) and the reference drug solution, 1 μl of the reference solution to the plate. After developing and removal of the plate, dry in air. Spray with 10% sodium hydroxide in methanol, and examine under ultraviolet light at 365 nm. The fluorescent spots in the chromatogram obtained with the test solution correspond in position and colour to the fluorescent spots in the chromatogram obtained with the reference drug solution and the reference solution.

(3) To 50 tablets, removed the coats, pulverized to powder, add 80 ml of ether, ultrasonicate for 15 minutes, discard the ether extract, expel the ether, add 80 ml of methanol, ultrasonicate for 30 minutes, filter. Evaporate the filtrate to dryness, dissolve the residue in 50 ml of water, filter, and extract the filtrate with two 40-ml quantities of ethyl acetate. Discard the ethyl acetate extracts, and extract the filtrate with two 35-ml quantities of *n*-butanol saturated with water. Combine the *n*-butanol extracts, wash with 50 ml of water saturated with *n*-butanol, evaporate the *n*-butanol extracts to dryness, dissolve the residue in 10 ml of water, apply the water to a column (1.5 cm in internal diameter) packed with D101 macroporous resin (13 cm in length, packed by wet method), elute with 5 ml of ammonia TS, then elute with water (about 200 ml) to the eluate colourless, elute with 100 ml of dilute ethanol TS and collect the ethanol eluate, evaporate the eluate to dryness, and dissolve the residue in 1 ml of methanol as the test drug solution. Dissolve a quantity of paeoniflorin CRS in methanol to produce a solution containing 1 mg per ml as the reference solution. Carry out the method for thin layer chromatography (Appendix Ⅵ B), using silica gel G as the coating substance and the mixture of chloroform, ethyl acetate, methanol and formic acid (40 : 5 : 10 : 0.2) as the mobile phase. Apply separately 5 μl of the test solution and 2 μl of the reference solution to the plate. After developing and removal of the plate, dry in air. Spray with 5% vanillin in sulfuric acid, heat at 105℃ to the spots clear. The spot in the chromatogram obtained with the test solution corresponds in position and colour to the spot in the chromatogram obtained with the reference solution.

Other requirements Comply with the general requirements for tablets (Appendix Ⅰ D)

Assay Carry out the method for high performance liquid chromatography (Appendix Ⅵ D)

Chromatographic system and system suitability Use octadecylsilane bonded silica gel as the stationary phase and the mixture of acetonitrile and 0.125% solution of phosphoric acid (30 : 70) as the mobile phase. As detector a spectrophotometer set at 247 nm. The number of theoretical plates for the column is not less than 3000, calculated with the reference to the peak of psoralen.

Reference solution Dissolve a quantity of psoralen and isopsoralen CRS, accurately weighed, in methanol to produce a mixture containing 16 μg of each per ml as the reference solution.

Test solution To 20 tablets with coating removed, pulverized to powder. Weigh accurately about 1 g of the powder, to a stopper conical flask. Add accurately 25 ml of methanol, stopper tightly, weighed accurately. Ultrasonicate (power, 250 W; frequency, 25 kHz) for 30 minutes, allowed to cool, weighted accurately again, replenish the lost weigh with methanol, mix well and filter. Discard the initial filtrate, measure accurately 1 ml of the successive filtrate in a 10 ml volumetric flask, add methanol to volume, mix well and filter, and use the successive filtrate as the test solution.

Procedure Inject accurately 5 μl of each of the reference solution and the test solution into the column and calculate the content.

It contains not less than 0.17 mg of the total amount of psoralen ($C_{11}H_6O_3$) and isopsoralen ($C_{11}H_6O_3$) per tablet, referred to Fructus Psoraleae.

Action To reinforce the liver, kidney, *qi* and nourish blood.

Indications Consumption of *qi* due to a *deficiency* of *qi* and blood with manifestations of palpitation, shortness of breath, dizziness and blurred vision, lassitude, weakness and aching in the lower back and knees, pallor, pale lips and nails, accompanied with hemorrhage due to *deficiency* in the liver and kidney and insufficient *qi* and blood; aplastic anemia and iron-deficiency anemia with above symptoms.

Usage and dosage 5 tablets, 3 times a day.

Storage Preserve in tightly closed containers.

Zaizao Wan
(再造丸)

Zaizao Pills

Ingredients Agkistrodon 20 g; Scorpio 15 g; pheretima 5 g; Bombyx Batryticatus (stir-baked) 10 g; Squama Manis (processed) 10 g; Os Pardi (processed) 10 g; Moschus 5 g; Pulvis Cornus Bubali Concentratus 15 g; Calculus Bovis 2.5 g; Carapax et Plastrum Testudinis (processed) 10 g; Cinnabaris 10 g; Rhizoma Gastrodiae 20 g; Radix Saposhnikoviae 20 g; Rhizoma et Radix Notopterygii 20 g; Radix Angelicae Dahuricae 20 g; Rhizoma Chuanxiong 20 g; Radix Puerariae 15 g; Herba Ephedrae 20 g; Cortex Cinnamomi 20 g; Herba Asari 10 g; Radix Aconiti Lateralis Preparata 10 g; Lignum Pini Nodi 10 g; Herba Taxilli 20 g; Rhizoma Drynariae (stir-baked) 10 g; Radix Clematidis (stir-baked with wine) 15 g; Rhizoma Dioscoreae Hypoglaucae 20 g; Radix Angelicae Sinensis 10 g; Radix Paeoniae Rubra 10 g; Rhizoma Wenyujin Concisum 2.5 g; Sanguis Draconis 7.5 g; Radix Notoginseng 5 g; Olibanum (processed) 10 g; Myrrha (processed) 10 g; Radix et Rhizoma Ginseng 20 g; Radix Astragali 20 g; Rhizoma Atractylodis Macrocephalae (stir-baked) 18 g; Poria 10 g; Radix Glycyrrhizae 20 g; Concretio Silicea Bambusae 10 g; Radix Polygoni Multiflori Praeparata 20 g; Radix Rehmanniae Preparata 20 g; Radix Scrophulariae 20 g; Rhizoma Coptidis 20 g; Radix et Rhizoma Rhei 20 g; Exocarpium Citri Grandis 40 g; Pericarpium Citri Reticulatae Viride (stir-baked with vinegar) 10 g; Lignum Aquilariae Resinatum 10 g; Lignum Santali Albi 5 g; Herba Pogostemonis 20 g; Fructus Caryophylli 10 g; Borneolum Syntheticum 2.5 g; Radix Linderae 10 g; Fructus Amomi Rotundus 10 g; Semen Alpiniae Katsumadai 20 g; Rhizoma Cyperi (processed with vinegar) 10 g; Rhizoma Anemones Raddeanae (processed with vinegar) 20 g; Fujian Massa Medicata Fermentata 40 g; Semen Oryzae cum Monasco Fermentatum 5 g.

Procedure Levigate Cinnabaris to very fine powder. Pulverize the other ingredients, except Moschus, Pulvis

Corni Bubali Concentratus, Calculus Bovis and Borneolum Syntheticum, to fine powder. Triturate Moschus, Pulvis Cornus Bubali Concentratus, Calculus Bovis and Borneolum Syntheticum with the above fine powders, sift and mix thoroughly. To each 100 g of the powder add 120-150 g of refined honey to make big honeyed pills.

Description Brown big honeyed pills; odour, aromatic; taste, slightly sweet and bitter.

Identification Microscopical: Irregular branched masses colourless, dissolved in chloral hydrate TS, hyphae colourless or pale brown, 4-6 μm in diameter. Vittae containing golden yellow secretions. Fibre bundles bright yellow, with slightly thickened and distinctly pitted walls. Fibres in bundles, dark brown or reddish-brown, walls thickened. Fibre bundles surrounded by parenchymatous cells containing prisms of calcium oxalate, forming crystal fibres, crystal cells with lignified and thickened walls. Fibre bundles surrounded by parenchymatous cells containing prisms of calcium oxalate, forming crystal fibres. Fibres in bundles or scattered, mostly broken, with thickened walls and longitudinal fissures on the surface, both ends broken to be broom-like, or truncated. Stomata characteristic, guard cells dumb-bell-shaped in lateral view. Stone cells of endotesta yellowish-brown or reddish-brown, subpolygonal in surface view, with thickened walls, lumina containing silica bodies. Stone cells subrounded or subrectangular, with thin walls on one side. Stone cells yellowish-brown or colourless, subrectangular, subrounded or irregular, up to 94 μm in diameter. Prisms of calcium oxalate abundant in parenchyma. Needle crystals of calcium oxalate fine, irregularly filling in parenchymatous cells. Non-glandular hairs 1-6-celled, with warty walls. Parenchyma greyish-brown to blackish-brown, cells mostly shrunken, and each containing a brown nucleus-like mass. Parenchymatous cells filled with brown to reddish-brown contents. Bordered pitted tracheids in bundles, about 25 μm in diameter. Irregular muscle fibre pieces pale brown, with dense and regularly arranged sinuous striations. Fragments of body walls pale-yellow to yellow, with reticulate striations and rounded alveoli, sometimes showing brown setae. Fragments of scales colourless, with numerous rounded pits, varying in size.

Other requirements Comply with the general requirements for pills (Appendix Ⅰ A).

Action To expel *wind* and resolve *phlegm*, and promote blood circulation to dredge meridians.

Indications Stroke due to *wind-phlegm* obstructing meridians with manifestations of hemiplegia, deviation of the mouth and tongue, numbness and pain of hands and feet, muscular contracture and dysphasia.

Usage and dosage 1 pill, twice a day.

Precaution Contraindicated for pregnant women.

Strength 9 g per pill

Storage Preserve in tightly closed containers.

Zanglian Wan
(脏连丸)

Zanglian Pills

Ingredients Rhizoma Coptidis 25 g; Radix Scutellariae 150 g; Radix Rehmanniae 75 g; Radix Paeoniae Rubra 50 g; Radix Angelicae Sinensis 50 g; Fructus Sophorae 100 g; Flos Sophorae 75 g; Spica Schizonepetae 50 g; Radix Sanguisorbae (carbonized) 75 g; Colla Corii Asini 50 g.

Procedure Pulverize the above ten ingredients to coarse powder. Take 350 g of large intestine of pig, wash clean, cut into sections, and mix thoroughly with the coarse powder, steam thoroughly, and dry. Pulverize to fine powder, sift, and mix well. To each 100 g of the powder add 6-10 g of refined honey and a quantity of water to make pills, dry and make water-honeyed pills; or add 80-100 g of refined honey to make small or big honeyed pills.

Description Brown to blackish-brown water-honeyed pills, blackish-brown small honeyed pills or big honeyed pills; taste, bitter.

Identification (1) Microscopical: Fibre bundles bright yellow, walls slightly thickened, pits distinct. Bast fibres pale yellow, fusiform, walls thickened, with fine pit canals. Fibres slender, slightly curved, walls slightly thickened and unlignified. Parenchyma greyish-brown to blackish-brown, cells mostly shrunken, and each containing a brown nucleus-like mass. Palisade cells of testa, 1 row, 100-190 μm long. Lower epidermal cells of corolla polygonal, with anomocytic stomata; parenchymatous cells containing prisms of calcium oxalate.

(2) Pulverize 1 g of water-honeyed pills to powder; or grind 1.8 g of small honeyed pills or big honeyed pills, cut into pieces, with 2 g of kieselguhr; add 10 ml of methanol, and ultrasonicate for 15 minutes. Filter and use the filtrate as the test solution. Prepare a solution of 50 mg of Rhizoma Coptidis reference drug in the same manner as the reference drug solution. Dissolve a quantity of berberine hydrochloride CRS in methanol to produce a solution containing 0.2 mg per ml as the reference solution. Carry out the method for thin layer chromatography (Appendix Ⅵ B), using silica gel G as the coating substance and a mixture of benzene, ethyl acetate, methanol, isobutanol and concentrated ammomia TS (12 : 6 : 3 : 3 : 1) as the mobile phase, pre-equilibrated with ammonia vapour. Apply separately 3 μl of each of the three solutions to the plate. After developing and removal of the plate, dry in air, and examine under ultraviolet light at 365 nm. The florescent spots in the chromatogram obtained with the test solution correspond in position and colour to the spots in the chromatogram obtained with the reference drug solution and reference solution.

(3) Pulverize 1.5 g of water-honeyed pills to powder; or grind 2.5 g of small honeyed pills or big honeyed pills, cut into pieces, with 3 g of kieselguhr; macerate with 20 ml of petroleum ether (30-60℃) for 1 hour, shake constantly and filter. Discard petroleum ether layer, and expel solvent of the drug residue. Ultrasonicate the residue with 20 ml of methanol for 30 minutes, filter, evaporate to dryness, and dissolve the residue in 0.5 ml of water. Apply to a polyamide column (100 mesh, 2 g, 1.5-2.0 cm in diameter, packed by dry method), wash with 50 ml of water, discard the washing, elute with 50 ml of ethanol, collect the eluate, evaporate to dryness, dissolve the residue with 2 ml of methanol as the test solution. Dissolve a quantity of rutin CRS in methanol to produce a solution containing 1 mg per ml as the reference solution. Carry out the method for thin layer chromatography (Appendix Ⅵ B), using silica gel G as the coating substance and the upper layer of the mixture of ethyl acetate, formic acid and water (10 : 2 : 3) as the mobile phase. Apply separately 1 μl of the test solution and 2 μl of the reference solution to the plate. After developing and removal of the plate, dry in air, spray with 5% aluminium trichloride in ethanol and examine under ultraviolet light at 365 nm. The florescent spot in the chromatogram obtained with the test solution corresponds in position and colour to the spot in the chromatogram obtained with the reference solution.

Other requirements Comply with the general requirements for pills (Appendix Ⅰ A).

Assay Carry out the method for high performance liquid chromatography (Appendix Ⅵ D).

Chromatographic system and system suitability Use octadecylsilane bonded silica gel as the stationary phase and a mixture of methanol and 2% solution of acetic acid (55 : 45) as the mobile phase. As detector a spectrophotometer set at 280 nm. The number of theoretical plates of the column is not less than 3000, calculated with the reference to the peak of baicalin.

Reference solution Dissolve a quantity of baicalin CRS, weighed accurately, in methanol to produce a solution containing 40 μg per ml as the reference solution.

Test solution Weigh accurately 0.25 g of the water-honeyed pills, pulverized to fine powder, or 0.45 g of small honeyed pills or big honeyed pills, cut into pieces; place to a stopper conical flask, add accurately 50 ml of methanol, weigh, and heat under reflux for 1 hour. Stand to cool, weigh again, replenish the lost weight with methanol and mix thoroughly. Filter, and use the successive filtrate as the test solution.

Procedure Inject accurately 10 μl of each of the reference solution and the test solution into the column, and calculate the content.

It contains not less than 6.0 mg of baicalin ($C_{21}H_{18}O_{11}$) per gram of water-honeyed pills; not less than 3.3 mg per gram of small honeyed pills; and not less than 30 mg per big honeyed pill; referred to Radix Scutellariae.

Action To clear *heat* from intestines and arrest bleeding.

Indications Hematochezia due to *heat* in intestines, burning sensation in the anus, and swollen and painful hemorrhoids.

Usage and dosage 6-9 g of water-honeyed pills; 9 g of small honeyed pills; 1 pill of big honeyed pills; twice a day.

Strength 9 g per big honeyed pill

Storage Preserve in tightly closed containers.

Zhenggu Shui
(正骨水)
Zhenggu Tincture

Ingredients Caulis et Radix Croton Tiglii; Radix Aucklandiae; Caulis Piperis Kadsurae; Eupolyphaga seu Steleophaga; Radix et Rhizoma Litseae; Fructus Gleditsiae Abnormalis; Cortex Periplocae; Rhizoma Curcumae; Caulis Gneti; Radix et Rhizoma Cinnamomi Camphorae; Radix et Rhizoma Cynanchi Paniculati; Lignum Dalbergiae Odorif-erae; Radix Zanthoxyli; Herba Schoepfiae; Herba Inulae Cappae; Rhizoma Polygoni Cuspidati; Herba Securidaca; Radix Flemingiae; Radix Ardisiae Crenatae; Herba Calophylli; Caulis Piper is wallichii; Radix Araliae Armatae; Radix Aconiti Kusnezoffii; Mentholum; Camphora.

Procedure Heat under reflux the above twenty-six ingredients, except Radix Cynanchi Paniculati, Radix Zanthoxyli, Lignum Dalbergiae Odoriferae, Mentholum, Camphora and 41.7 g of Herba Securidaca, with 1000 ml of ethanol and a quantity of water in a refluxing tanker for 7 hours, then distill, collect about 1200 ml of the distillate. Pulverize separately Radix Cynanchi Paniculati, Radix Zanthoxyli, Lignum Dalbergiae Odoriferae and the left parts of Herba Securidaca to coarse powder, add the powder to the distillate, stir thoroughly, and macerate for 48 hours. Add mentholum and Camphora into the maceration liquid, stir to dissolve, filter, and adjust to 1000 ml of total amount.

Description A clear, brownish-red liquid; odour, aromatic.

Identification (1) Extract 15 ml of the tincture with 25 ml of petroleum ether (30-60℃) in a separator with shaking, separate the lower layer and evaporate to dryness, dissolve the residue in 4 ml of 75% ethanol, filter and use the filtrate as the test solution. Macerate 1 g of Lignum Dalbergiae Odoriferae reference drug in 10 ml of 75% ethanol for 30 minutes, filter, concentrate the filtrate to 2 ml as the reference drug solution. Carry out the method for thin layer chromatography (Appendix Ⅵ B), using silica gel G containing sodium carboxymethylcellulose as the coating substance and a mixture of chloroform, methanol and concentrated ammonium TS (90 : 9 : 1) as the mobile phase. Apply separately 3 μl of each of the above two solutions to the plate. After developing and removal of the plate, dry in air, examine under ultraviolet light at 365 nm. The spots in the chromatogram obtained with the test solution correspond in position and colour to the spots in the chromatogram obtained with the reference drug solution.

(2) Dissolve paeonol CRS in 60% ethanol to produce a solution containing 0.5 mg per ml as the reference solution. Carry out the method for thin layer chromatography (Appendix Ⅵ B), using silica gel G mixed with sodium carboxymethylcellulose as the coating substance and a mixture of benzene and ethyl acetate (20 : 1) as the mobile phase. Apply separately 10 μl of the tincture and 5 μl of the above reference solution to the plate. After developing and removal of the plate, dry in air, spray with 5% ferric chloride in ethanol, heat to the spots clear. The spot in the chromatogram obtained with the test solution corresponds in position and colour to the spot in chromatogram obtained with the reference solution.

(3) Evaporate 15 ml of the tincture to dryness on a water bath, dissolve the residue in 1 ml of ethanol as the test solution. To 1 g of Radix Zanthoxyli reference drug add 15 ml of ethanol, ultrasonicate for 30 minutes, filter, evaporate the filtrate to dryness, dissolve the residue in 1 ml of ethanol as the reference drug solution. Carry out the method for thin layer chromatography (Appendix Ⅵ B), using silica gel G mixed with sodium caboxymethylcellulose as the coating substance and a mixture of toluene, ethyl acetate and methanol (25 : 2 : 0.1) as the mobile phase. Apply separately 4 μl of each of above two solutions to the plate. After developing and removal of the plate, dry in air, examine under ultraviolet light at 365 nm. The fluorescent spots in the chromatogram obtained with the test solution correspond in position and colour to the spots in the chromatogram obtained with the reference drug solution.

(4) Dilute 1 ml of the tincture with ethanol to 50 ml as the test solution. Dissolve camphor CRS and menthol CRS in ethanol to produce two solutions containing 1 mg per ml as the reference solutions. Carry out the method for gas chromatography (Appendix Ⅵ E), use 10% polyethylene glycol (PEG)-20 M as the stationary phase, and maintain the column temperature at 160℃. Inject separately quantities of the above three solutions into the column, the retention time of the peak in the chromatogram obtained with the test solution correspond with that in the chromatogram obtained with the reference solutions.

Ethanol content 56 per cent-66 per cent (Appendix Ⅸ M).

Other requirements Comply with the general requirements for tinctures (Appendix Ⅰ N).

Assay ***Volatile oil*** Measure accurately 10 ml of the tincture in a separator, add 100 ml of a saturated solution of sodium chloride, shake for 1-2 minutes, allow to stand for 1-2 hours, transfer the supernatant liquid to a round bottom flask, wash the separator with hot water for several times,

transfer the washings to the same flask, carry out the method for determination of volatile oils (Appendix Ⅹ D, method Ⅰ), it contains not less than 9.5 per cent of volatile oil.

Radix et Rhizoma Cynanchi Paniculati Carry out the method for high performance liquid chromatography (Appendix Ⅵ D).

Chromatographic system and system suitability Use octadecylsilane bonded silica gel as the stationary phase and a mixture of acetonitrile, water, triethylamine and phosphoric acid (28 : 72 : 0.1 : 0.1) as the mobile phase. As detector a spectrophotometer set at 274 nm. The number of theoretical plates of the column is not less than 3000, calculated with the reference to the peak of paeonol.

Reference solution Dissolve a quantities of paeonol CRS, weighed accurately, with methanol to produce a solution containing 60 μg per ml as the reference solution.

Test solution Measure accurately 10 ml of the tincture in a 25 ml volumetric flask, dilute with ethanol to volume, and mix well.

Procedure Inject accurately 10 μl of each of the reference solution and the test solution into the column, and calculate the content.

It contains not less than 0.10 mg of paeonol ($C_9H_{10}O_3$) per ml, referred to Radix et Rhizoma Cynanchi Paniculati.

Action To promote blood circulation to expel stagnated blood, relax muscles and tendons and activate meridians, and reduce swelling to kill pain.

Indications Traumatic injuries, fracture, dislocation and relief of tiredness before or after sports.

Usage and dosage Gently smear the affected part with the absorbent cotton socked with the tincture. For patients of serious injury smear the affected part for 1 hour with the absorbent cotton soaked with tincture, 2-3 times a day.

Precaution Never prescribe for oral administration; never rub it into a wound; cease medication when there occurs itching and rashes.

Strength (1) 12 ml per bottle (2) 30 ml per bottle (3) 45 ml per bottle (4) 88 ml per bottle

Storage Perverse in tightly closed containers, store in a cool and dark place.

Zhenkening Tangjiang (镇咳宁糖浆)

Zhenkening Syrup

Ingredients Extractum Glycyrrhizae Liquidum 40 ml; Radix platycodi 80 g; Ephedrine Hydrochloride 0.8 g; Cortex Mori 20 g.

Procedure Take 80 g of Radix Platycodonis, carry out the percolation as described under liquid extracts and extracts (Appendix Ⅰ O), using 40% ethanol as solvent and collect 240 ml of percolate. Take 20 g of Cortex Mori in the same manner, collect 60 ml of percolate. Prepare a syrup (Syrupus Simplex) with 600 g of sucrose. To the syrup below 60℃, add Extractum Glycyrrhizae Liquidum, percolate of Radix platycodi and Cortex Mori, ephedrine hydrochloride, 0.1 g of antimony potassium tartrate and 0.1 g of ethyl *p*-hydroxybenzoate, and 2 ml of vanillic essence. Stir well, add water to 1000 ml, mix well and filter.

Description A sticky, dark brown liquid; odour, aromatic; taste, sweet.

Identification (1) Extract 10 ml of the syrup with three 20-ml quantities of *n*-butanol saturated with water, combine the extract, and wash with three 20-ml quantities of water. Evaporate the extract to dryness, and dissolve the residue in 5 ml of methanol as the test solution. Heat under reflux 1 g of Radix et Rhizoma Glycyrrhizae reference drug in 20 ml of methanol for 1 hour, filter and evaporate the filtrate to dryness. Dissolve the residue in 10 ml of water, prepare a solution in the same manner as the reference drug solution. Carry out the method for thin layer chromatography (Appendix Ⅵ B), as the coating substance using silica gel G mixed with 1% solution of sodium hydroxide as the coating substance and a mixture of ethyl acetate, formic acid, glacial acetate acid and water (15 : 1 : 1.5 : 2) as the mobile phase. Apply separately 3-5 μl of each of the test solution and the reference drug solution to the plate. After developing and removal of the plate, dry in air, spray with 10% sulfuric acid in ethanol and heat at 105℃ to spots clear. The spots in the chromatogram obtained with the test solution correspond in position and colour to the spots in the chromatogram obtained with the reference drug solution.

(2) Heat under reflux 10 ml of the syrup in 20 ml of chloroform and 2 ml of hydrochloric acid for 1 hour, allow to cool, separate the chloroform solution and dehydrous with anhydrous sodium sulfate. Evaporate solvent, dissolve the residue in 2 ml of methanol as the test solution. Prepare a solution of 1 g of Radix Platycodi reference drug in the same manner as the reference drug solution. Carry out the method for thin layer chromatography (Appendix Ⅵ B), using silica gel G as the coating substance and a mixture of *n*-hexane, ethyl acetate, and glacial acetic acid (3 : 2 : 1) as the mobile phase. Apply separately 2-5 μl of each of the test solution and the reference drug solution to the plate. After developing and removal of the plate, dry in air, spray with 10% sulfuric acid in ethanol and heat at 105℃ to spots clear. The spots in the chromatogram obtained with the test solution correspond in position and colour to the spots in the chromatogram obtained with the reference drug solution.

(3) Shake 2.5 ml of the syrup with 4 ml of ether and 1 ml of concentrated ammonia TS in a separator, separate the ether layer and extract the aqueous solution further with two 4-ml quantities of ether. Combine the ether extracts, add 2.5 ml of acidic ethanol (mix 20 ml of ethanol and 1 ml of hydrochloric acid), evaporate to dryness, and add 0.5 ml of methanol to dissolve the residue as the test solution. Disslove ephedrine hydrochloride CRS in methanol to produce a solution containing 5 mg per ml as the reference solution. Carry out the method for thin layer chromatography (Appendix Ⅵ B), using silica gel G as the coating substance and a mixture of chloroform, methanol and concentrated ammonia TS (40 : 8 : 1) as the mobile phase. Apply separately 2-3 μl of each of the two solutions to the plate. After developing and removal of the plate, dry in air, spray with ninhydrin TS, heat at 105℃ to spots clear. The spot in the chromatogram obtained with the test solution corresponds in position and colour to the spot in the chromatogram obtained with the reference solution.

Relative density 1.20-1.27 (Appendix Ⅶ A).

Other requirements Comply with the general requirements for syrups (Appendix Ⅰ H).

Assay Carry out the method for high performance liquid chromatography (Appendix Ⅵ D).

Chromatographic system and system suitability Use octadecylsilane bonded silica gel as the stationary phase and a mixture of acetonitrile and 0.02 mol/L solution of sodium dihydrogen phosphate (containing 0.1% triethylamine and adjusted pH to 2.7 with phosphoric acid) (4 : 100) as the

mobile phase. As detector a spectrophotometer set at 210 nm. The number of theoretical plates of the column is not less than 5000, calculated with the reference to the peak of ephedrin.

Reference solution Dissolve a quantity of ephedrin hydrochloride CRS, accurately weighed, in 0.01 mol/L solution of hydrochloric acid to prepare a solution containing 60 μg per ml.

Test solution weigh accurately 2.5 g of the syrup in a 25 ml volumetric flask, dilute with 0.01 mol/L solution of hydrochloric acid to the volume and mix well. Filter and use the successive filtrate as the test solution.

Procedure Inject accurately 10 μl of each of the reference solution and the test solution into the column, determine and calculate the content.
It contains not less than 0.58 mg and no more than 0.72 mg of ephedrin hydrochloride ($C_{10}H_{15}NO \cdot HCl$) per gram.

Action To stop coughing, relieve asthma and expel phlegm.

Indications Coughing, asthma with expectoration of phlegm due to attack of the lung by *wind-cold*; bronchitis, bronchial asthma with above symptoms.

Usage and dosage 5-10 ml, 3 times a day.

Precaution Follow the doctor's order; be cautious about patients with coronary heart disease, angina pectoris or hyperthyrea.

Storage Preserve in tightly closed containers.

Zhennaoning Jiaonang
(镇脑宁胶囊)

Zhennaoning Capsules

Ingredients Pulvis Cerebrum Suis; Herba Asari; Radix et Rhizoma Salviae Miltiorrhizae; Pulvis Cornus Bubali Concentratus; Rhizoma Chuanxiong; Rhizoma Gastrodiae; Radix Puerariae; Rhizoma Ligustici; Radix Angelicae Dahuricae.

Procedure Pulverize the above ingredients, except Pulvis Cerebrum Suis and Pulvis Cornus Bubali Concentratus, to fine powder, sift. Add Pulvis Cerebrum Suis and Pulvis Cornus Bubali Concentratus, mix well and make to 1000 capsules.

Description Hard capsules with pale brown content; odour, characteristic and aromatic; taste, slightly bitter.

Identification (1) Microscopical: Fibres in bundles, surrounded by cells containing prisms of calcium oxalate, forming crystal fibres, walls of crystal cells lignified and thickened. Irregular fragments pale grayish-white or grayish-yellow, somewhat lustrous with grayish-brown irregular pigment granules and longitudinal cracks on the surface.
(2) Extract 6 g of content with 50 ml of ether by shaking for 1 hour, filter and evaporate the filtrate to dryness. Dissolve the residue in 1 ml of ethyl acetate as the test solution. Dissolve tanshinone ⅡA CRS in ethyl acetate to produce a solution containing 2 mg per ml as the reference solution. Carry out the method for thin layer chromatography (Appendix Ⅵ B), using silica gel G as the coating substance and a mixture of toluene and ethyl acetate (19 : 1) as the mobile phase. Apply separately 5 μl of the test solution and 2 μl of the reference solution to the plate. After developing and removal of the plate, dry in air. The spot in the chromatogram obtained with the test solution corresponds in position and colour to the spot in the chromatogram obtained with the reference solution.
(3) Macerate 2 g of content in 20 ml of ether for 20 minutes, filter and evaporate the filtrate to dryness. Dissolve the residue in 1 ml of ethyl acetate as the reference solution. Prepare two solutions separately with 1 g of each of Rhizoma Chuanxiong reference drug and Radix Angelicae Dahuricae reference drug in the same manner as the reference drug solutions. Carry out the method for thin layer chromatography (Appendix Ⅵ B), using silica gel G as the coating substance and a mixture of *n*-hexane and ethyl acetate (9 : 1) as the mobile phase. Apply separately 5 μl each of the three solutions to the plate. After developing and removal of the plate, dry in air and examine under ultraviolet light at 365 nm. The fluorescent spots in the chromatogram obtained with the test solution correspond in position and colour to the spots in the chromatogram obtained with the reference solutions.

Other requirements Comply with the general requirements for capsules (Appendix Ⅰ L)

Assay Carry out the method for high performance liquid chromatography (Appendix Ⅵ D).

Chromatographic system and system suitability Use octadecyasilane bonded silica gel as the stationary phase and a mixture of methanol and water (25 : 75) as the mobile phase. As detector a spectrophotometer set at 250 nm. The number of theoretical plates of the column is not less than 4000, calculated with reference to the peak of puerarin.

Reference solution Dissolve a quantity of puerarin CRS, accurately weighed, in 30% ethanol to produce a solution containing 15 μg per ml as the reference solution.

Test solution Mix well the content, obtained under the test of weight variation, weigh accurately 1.0 g, grind well with 1.0 g of kieslguhr, transfer to a Soxhlet's extractor, add a quantity of petroleum ether (60-90℃), heat under reflux on a water bath for 4 hours. Discard the petroleum ether extract and expel solvent remained in the residue. Transfer the residue along with the filter paper to a stopper conical flask and add accurately 50 ml of 30% ethanol, stopper tightly, and weigh. Ultrasonicate (power 250 W, frequency 50 kHz) for 40 minutes, cool, weigh again, replenish the loss of weight with 30% ethanol, shake well, filter, and use the successive filtrate as the test solution.

Procedure Inject accurately 5 μl of the reference solution and 10 μl of the test solution into the column, respectively, and calculate the content.
It contains not less than 0.10 mg of puerarin ($C_{21}H_{20}O_9$) per capsule, referred to Radix Puerariae.

Action To extinguish *wind* and dredge meridians.

Indications Headache, dizziness, nausea, vomiting, blurred vision, numbness of limbs and tinnitus due to upward disturbance of *wind*; angioneurotic headache, hypertension and arteriosclerosis with above symptoms.

Usage and dosage 4-5 capsules, 3 times a day.

Strength 0.3 g per capsule

Storage Preserve in tightly closed containers.

Zhibai Dihuang Wan
(知柏地黄丸)

Zhibai Dihuang Pills

Ingredients Rhizoma Anemarrhenae 40 g; Cortex Phellodendri Chinensis 40 g; Radix Rehmanniae Praeparata 160 g;

Fructus Corni (processed) 80 g; Cortex Moutan 60 g; Rhizoma Dioscoreae 80 g; Poria 60 g; Rhizoma Alismatis 60 g.

Procedure Pulverize the above eight ingredients to fine powder, sift and mix well. To each 100 g of the powder add 35-50 g of refined honey and a quantity of water, make water-honeyed pills and dry; or add 80-110 g of refined honey to make small honeyed pills or big honeyed pills.

Description Brownish-black water-honeyed pills, blackish-brown small honeyed pills or big honeyed pills; taste, sweet and slightly bitter and sour.

Identification (1) Microscopical: Starch granules triangle-ovoid or oblong, 24-40 μm in diameter, hilum short cleft-like or V-shaped. Irregular branched masses colourless, dissolved in chloral hydrate TS; hyphae colourless or pale brown, 4-6 μm in diameter. Parenchyma greyish-brown to blackish-brown, cells mostly shrunken, and each containing a brown nucleus-like mass. Needle crystals of calcium oxalate in bundles or scattered, 26-110 μm long. Clusters of calcium oxalate occurring in colourless parenchymatous cells, sometimes several cells arranged in rows. Epidermal cells of pericarp orange-yellow, subpolygonal in surface view, with beaded anticlinal walls. Parenchymatous cells subrounded, with elliptical pits gathered into pit groups. Anticlinal walls of endodermal cells sinuous, relatively thickened, lignified, with sparse and fine pit-canals. Fibre bundles bright yellow, surrounded by cells containing prisms of calcium oxalate, forming crystal fibres, walls of crystal cells lignified and thickened.

(2) Pulverize 6 g of water-honeyed pills, or cut 9 g of small honeyed pills or big honeyed pills into pieces; add 15 ml of ether, shake for 15 minutes, stand for 1 hour, filter, and expel ether. Dissolve the residue in 1 ml of acetone as the test solution. Dissolve paeonol CRS in acetone to prepare a solution containing 1 mg per ml as the reference solution. Carry out the method for thin layer chromatography (Appendix Ⅵ B), using silica gel G as the coating substance and a mixture of cyclohexane and ethyl acetate (3 : 1) as the mobile phase. Apply in strip separately 10 μl of each of the two solutions to the plate. After developing and removal of the plate, dry in air, spray with 5% ferric chloride in ethanol acidified with hydrochloric acid, and heat to the spots clear. The bluish-brown strip in the chromatogram obtained with the test solution corresponds in position and colour to the strip in the chromatogram obtained with the reference solution.

(3) Pulverize 2 g, add 5 ml of methanol, heat under reflux for 15 minutes, filter, replenish methanol to 5 ml, and use as the test solution. Prepare a solution with 0.1 g of Cortex Phellodendri Chinensis reference drug in the same manner as the reference drug solution. Dissolve berberine hydrochloride CRS in methanol to prepare a solution containing 0.5 g per ml as the reference solution. Carry out the method for thin layer chromatography (Appendix Ⅵ B), using silica gel G as the coating substance and a mixture of benzene, ethyl acetate, methanol, isopropanol and concentrated ammonia TS (12 : 6 : 3 : 3 : 1) as the mobile phase. Apply separately 1 μl each of the three solutions to the plate. After developing in a chamber pre-equilibrated with ammonia vapour and removal of the plate, dry in air, and examine under ultraviolet light at 365 nm. The yellow fluorescent spots in the chromatogram obtained with the test solution correspond in position and colour to the spots in the chromatograms obtained with the reference drug solution and the reference solution.

Other requirements Comply with the general requirements for pills (Appendix Ⅰ A).

Assay ***Fructus Corni*** Carry out the method for high performance liquid chromatography (Appendix Ⅵ D).

Chromatographic system and system suitability Use octadecyasilane bonded silica gel as the stationary phase and a mixture of acetonitrile, methanol, tetrahydrofuran and 0.05% solution of phosphoric acid (8 : 4 : 1 : 87) as the mobile phase. As detector a spectrophotometer set at 236 nm. Maintain the column temperature at 40℃. The number of theoretical plates of the column is not less than 4000, calculated with reference to the peak of loganin.

Reference solution Dissolve a quantity of loganin CRS, accurately weighed, in 50% methanol to prepare a solution containing 40 μg per ml.

Test solution Cut water-honeyed pills or small honeyed pills, into pieces, weigh accurately 0.7 g; or chip big honeyed pills, obtained under the test of weight variation, into pieces, weigh accurately 1.0 g. Place the pieces to a stopper conical flask, add accurately 25 ml of 50% methanol, and weigh. Ultrasonicate (power 250 W, frequency 33 kHz) for 15 minutes. Heat under reflux for 1 hour, cool, weigh again, replenish the loss of weight with 50% methanol, shake well and filter. Apply accurately 10 ml of the successive filtrate to a column packed with neutral aluminium oxide (100-200 mesh, 4 g, 1 cm in diameter), elute with 50 ml of 40% methanol, collect the eluates, evaporate to dryness and dissolve the residue in 50% methanol. Transfer to a 5 ml volumetric flask, dilute with 50% methanol to volume, shake well, filter and use the successive filtrate as the test solution.

Procedure Inject accurately 10 μl of each of the reference solution and the test solution into the column, respectively, and calculate the content.

It contains not less than 0.53 mg of loganin ($C_{17}H_{26}O_{10}$) per gram of water-honeyed pills, 0.40 mg per gram of small honeyed pills, 3.60 mg per pill of big honeyed pills, referred to Fructus Corni.

Cortex Moutan Carry out the method for high performance liquid chromatography (Appendix Ⅵ D).

Chromatographic system and system suitability Use octadecyasilane bonded silica gel as the stationary phase and a mixture of methanol and water (70 : 30) as the mobile phase. As detector a spectrophotometer set at 274 nm. The number of theoretical plates of the column is not less than 3500, calculated with the reference to the peak of paeonol.

Reference solution Dissolve a quantity of paeonol CRS, accurately weighed, in methanol to prepare a solution containing 15 μg per ml.

Test solution Cut water-honeyed pills or small honeyed pills into pieces, weigh accurately 0.4 g, or chip big honeyed pills, obtained under the test of weight variation, into pieces, weigh accurately 0.5 g. Place the pieces to a stopper conical flask, add accurately 50 ml of 50% methanol, stopper well, and weigh. Ultrasonicate (power 250 W, frequency 33 kHz) for 45 minutes, cool, weigh again, replenish the loss of weight with 50% methanol, shake well, filter, and use the successive filtrate as the test solution.

Procedure Inject accurately 10 μl of the reference solution and 20 μl of the test solution into the column, respectively, and calculate the content.

It contains not less than 0.80 mg of paeonol ($C_9H_{10}O_3$) per gram of water-honeyed pills, 0.55 mg per gram of small honeyed pills, 5.0 mg per pill of big honeyed pills, referred to Cortex Moutan

Action To nourish *yin* to reduce *fire*.

Indications Tidal fever and night sweating, dry mouth and

sore throat, tinnitus, seminal emission, and concentrated urine due to *yin deficiency* with blazing of *fire*.

Usage and dosage 6 g of water-honeyed pills, 9 g of small honeyed pills or 1 big honeyed pill, twice a day.

Strength 9 g per big honeyed pill

Storage Preserve in tightly closed containers.

Zhichuanling Zhusheye (止喘灵注射液)

Zhichuanling Injection

Ingredients Herba Ephedrae; Flos Daturae; Semen Armeniacae Amarum; Fructus Forsythiae.

Procedure Decoct the above four ingredients with water twice, 1 hour for the first time and 30 minutes for the second time, combine the decoctions, filter and concentrate the filtrate to about 150 ml, add ethanol under stirring to a content of 70% ethanol, stand at 4℃ for 24 hours, filter and concentrate the filtrate. Add ethanol again to the concentrated extract to content of 85% ethanol, stir well, stand at 4℃ for 24 hours, filter. Concentrate the filtrate to 100 ml, dilute the concentrated solution with water for injection to 800 ml, adjust pH value, filter and add water for injection to 1000 ml, pack and sterilize.

Description A pale yellow clear liquid.

Identification (1) Measure 20 ml of the injection, add ammonia TS to adjust alkaline, extract with two 10-ml quantities of chloroform, combine chloroform extracts. Transfer 4 ml to two test tubes, to one tube add 5 drops of each of ammoniated cupric chloride TS and carbon disulfide. Shake and allow to stand; a yellow to yellowish-brown colour is produced in the chloroform layer. Use the other tube as a blank, add 5 drops of chloroform replacing carbon disulfide after shaking, the chloroform layer shows colourless or a yellowish colour.

(2) Evaporate 2 ml of the chloroform extracts, obtained under Identification (1), to almost dryness on a water bath. Transfer to a slide, add 1 drop of 0.5% solution of trinitrophenol, examine under microscope, many yellowish oily-drops are shown.

(3) Evaporate 10 ml of the chloroform extracts, obtained under Identification (1), to about 1 ml, add 1 ml of methanol and mix well. Filter and use the filtrate as the test solution. Dissolve ephedrine hydrochloride CRS in methanol to produce a solution containing 1mg per ml as the reference solution. Carry out the method for thin layer chromatography (Appendix Ⅵ B), using silica gel G as the coating substance and a mixture of chloroform, methanol and concentrated ammonia TS (20 : 5 : 0.5) as the mobile phase. Apply seperately 5 μl of each of the two solutions to the plate. After developing and removal of the plate, dry in air, spay with ninhydrin TS, heat at 105℃ for about 5 minutes. The red colour spot in the chromatogram obtained with the test solution corresponds in position and colour to the spot in the chromatogram obtained with the reference solution.

pH value 4.5-6.5 (Appendix Ⅶ G).

Relevant matter Comply with the test for "Relevant matter" in injections (Appendix Ⅸ S)

Undue toxicity Prepare a solution containing 0.1 ml of the injection per ml with sterilized normal saline. Complies with the test for Undue toxicity (Appendix Ⅺ C, Volume 2), injected intraperitoneally.

Other requirements Comply with the general requirements for injections (Appendix Ⅰ U).

Assay ***Total alkaloids*** Measure accurately 10 ml of the injection to a separator, add 0.5 ml of 1 mol/L solution of sodium hydroxide, extract with successive quantities of 10 ml, 10 ml, 5 ml and 5 ml of chloroform, combine chloroform extracts to a stopper conical flask. Add accurately 10 ml of 0.01 mol/L sulfuric acid VS and 10 ml of freshly boiled water, mix well, then add 1-2 drops of sodium alizarinsulfonate IS, and titrate with sodium hydroxide (0.02 mol/L) VS until a pale red colour is produced. Perform a blank determination and make necessary correction. Each ml of sulfuric acid (0.01 mol/L) VS is equivalent to 3.305 mg of ephedrine ($C_{10}H_{15}NO$).

It contains not less than 0.50 mg and no more than 0.80 mg of total alkaloids per ml, calculated as ephedrine ($C_{10}H_{15}NO$).

Flos Daturae Carry out the method for high performance liquid chromatography (Appendix Ⅵ D).

Chromatographic system and system suitability Use octadecylsilane bonded silica gel as the stationary phase and a mixture of acetonitrile and 0.07 mol/L solution of sodium phosphate (containing 17.5 mmol/L solution of sodium laurylsulfate and adjusted pH to 6.0 with phosphoric acid) (30 : 60) as the mobile phase. As detector a spectrophotometer set at 216 nm. The number of theoretical plates of the column is not less than 3000, calculated with the reference to the peak of scopolamine hydrobromide.

Reference solution Dissolve a quantity of scopolamine hydrobromide CRS, weighed accurately, in 0.07 mol/L solution of sodium phosphate (adjust pH to 6.0 with phosphoric acid) to prepare a solution containing 0.2 mg of scopolamine hydrobromide per ml (weight of scopolamine is equal to weight of scopolamine hydrobromide/1.445)

Test solution Measure accurately 20 ml of the injection in a separator, adjust pH to 2 with 2 mol/L solution of hydrochloric acid, and extract with 20 ml of chloroform. Discard chloroform layer, adjust pH of the water layer to 9 with concentrated ammonia TS, and extract with five 20-ml quantities of chloroform. Recover solvent, dissolve the residue with 0.07 mol/L solution of sodium phosphate (adjust pH to 6.0 with phosphoric acid), transfer to a 5 ml volumetric flask, dilute to the volume and mix well.

Procedure Inject accurately 20 μl of each of the reference solution and the test solution into the column, and calculate the content.

It contains not less than 15 μg of scopolamine ($C_{17}H_{21}NO_4$) per ml, referred to Flos Daturae.

Action To disseminate the lung and relieve asthma/dyspnea, and expel phlegm and relieve coughing.

Indications Asthma, coughing with expectoration of profuse phlegm and constriction in the chest due to phlegm retained in the lung and failure of the *lung* in dissemination of *lung-qi*; bronchial asthma and asthmatic bronchitis with above symptoms.

Usage and dosage 2 ml, 2-3 times a day, intramuscularly. Appropriate reduction of the dosage for children under 7 years old. 1-2 weeks waking a course of treatment, or follow a doctor's advice.

Precaution Contraindicated for glaucoma patients; following the doctor's order for patients with severe hypertention, coronary heart disease, prostatic hyperplasia and retention of urine.

Strength 2 ml per vial

Storage Preserve in tightly closed containers, protected

from light.

Zhikang Pian
(痔康片)

Zhikang Tablets

Ingredients Herba Siegesbeckiae; Flos Lonicerae Japonicae; Flos Sophorae; Radix Sanguisorbae (carbonized); Radix Scutellariae; Radix et Rhizoma Rhei.

Procedure Pulverize Radix et Rhizoma Rhei to powder, decoct Radix Sanguisorbae (carbonized) with water 2 times, 2 hours for the first time, and 1 hour for the second time, combine the decoctions, and filter for later use. Decoct Herba Siegesbeckiae; Flos Lonicerae Japonicae; Flos Sophorae and Radix Scutellariae with water 2 times, 2 hours for the first time, and 1 hour for the second time respectively, combine the decoctions, and filter, concentrate the filtrate to a thin extract with relative density of 1.08-1.15 (80℃), add ethanol to a content of 70% ethanol, stand for over night, filter. Recover ethanol from the filtrate. Combine the above filtrate, and concentrate to a thick extract with a relative density of 1.38 (40℃), mix with the powder of Radix et Rhizoma Rhei, mix well, dry at 70℃, pulverize, add a quantity of excipient, make granules, make to 1000 tablets and coated with film.

Description Film coated tablets with brown to dark-brown core; taste, bitter, astringent.

Identification (1) Pulverize 10 tablets with coating removed, to fine powder. Add 50 ml of ether, heat under reflux for 30 minutes, discard the ether extract. Evaporate the residue to dryness, add 40 ml of methanol, heat under reflux for 1 hour, filter. Evaporate the filtrate to dryness, dissolve the residue in 20 ml of water, filter, extract with successive quantities of 40 ml, 30 ml, 30 ml, 20 ml of *n*-butanol saturated with water. Combine the *n*-butanol extracts, wash with three 50-ml quantities of 4% solution of sodium hydroxide, discard the washings and wash with water saturated with *n*-butanol to neutral. Evaporate the *n*-butanol extract to dryness. Dissolve the residue in 2 ml of methanol as the test solution. Prepare a solution with 2 g of Herba Siegesbeckiae reference drug in the same manner as the reference drug solution. Carry out the method for the thin layer chromatography (Appendix Ⅵ B), using silica gel G as the coating substance and the lower layer of a mixture of chloroform, acetone, methanol, formic acid and water (10 : 10 : 5 : 1 : 5) as the mobile phase. Apply separately 5 μl of each of the test solution and the reference drug solution to the plate. After developing and removal of the plate, dry in air. Spray with 5% vanilin in sulfuric acid and heat at 105℃ to the spots clear. The spots in the chromatogram obtained with the test solution correspond in position and colour to the spots in the chromatogram obtained with the reference drug solution.

(2) Pulverize 10 tablets with coating removed, to fine powder. Add 50 ml of ether, heat under reflux for 30 minutes, discard the ether extract. Evaporate the residue to dryness, add 40 ml of methanol, ultrasonicate for 40 minutes, filter. Evaporate the filtrate to dryness, dissolve the residue in 20 ml of water. Apply it to a column packed with D-101 macroporous adsorption resin (1.8 cm in internal diameter, 7 cm in length), elute with 90 ml of water, evaporate the filtrate to dryness. Dissolve the residue in 2.5 ml of methanol, filter and use the filtrate as the test solution. Dissolve chlorogenic acid CRS in methanol to produce a solution containing 0.5 mg per ml as the reference solution. Carry out the method for thin layer chromatography (Appendix Ⅵ B), using polyamide as the coating substance, and acetic acid as the mobile phase. Apply separately 2 μl of each of the test solution and the reference solution to the membrane. After developing and removal of the membrane, dry in air. Examine under ultraviolet light at 365 nm. The fluorescent spot in the chromatogram obtained with the test solution corresponds in position and colour to the spot in the chromatogram obtained with the reference solution.

(3) Pulverize 10 tablets, removed the coats, to fine powder. Add 15 ml of methanol, ultrasonicate for 30 minutes, filter. Evaporate the filtrate to dryness, dissolve the residue in 1 ml of chloroform as the test solution. Dissolve separately emodin CRS and chrysophanol CRS in chloroform to produce solution containing 0.1 mg of each per ml as the reference solution. Carry out the method for thin layer chromatography (Appendix Ⅵ B), using silica gel G as the coating substance and the mixture of *n*-hexane, ethyl acetate and formic acid (30 : 10 : 0.5) as the mobile phase. Apply separately 10 μl of each of the test solution and the reference solution to the plate. After developing and removal of the plate, dry in air, expose the plate to ammonia vapour until the spots clear. The spots in the chromatogram obtained with the test solution correspond in position and colour to the spots in the chromatogram obtained with the reference solution.

Other requirements Comply with the general requirements for tablets (Appendix Ⅰ D).

Assay Carry out the method for high performance liquid chromatography (Appendix Ⅵ D).

Chromatographic system and system suitability Use octadecylsilane bonded silica gel as the stationary phase and a mixture of methanol, water and glacial acetic acid (30 : 70 : 2) as the mobile phase. As detector a spectrophotometer set at 260 nm. The number of theoretical plates of the column is not less than 1500, calculated with the reference to the peak of rutin.

Reference solution Dissolve a quantity of rutin CRS, dried previously to constant weight at 120℃, accurately weighed, in methanol to prepare a solution containing 20 μg per ml as the reference solution.

Test solution Pulverize 20 tablets with coating removed, to fine powder. To about 0.2 g of the powder, weigh accurately, in a Soxhlet's extractor, add a quantity of methanol, heat under reflux at 80℃ on the water bath for 4 hours until the extracts to colourless. Allow to stand to room temperature, transfer to a 100 ml volumetric flask, wash the container with a small quantity of methanol, combine the washings to the same volumetric flask, add methanol to volume. Mix thoroughly, filter and use the successive filtrate as the test solution.

Procedure Inject accurately 5 μl of each of the reference solution and the test solution into the column, and calculate the content.

It contents not less than 3.8 mg of anhydrous rutin ($C_{27}H_{30}O_{16}$) per tables, referred to Flos Sophorae.

Action To clear *heat* to cool blood, and purge *heat* and make bowels movement.

Indications Hemafecia, swollen and painful anus and tenesmus due to excessive *wind-heat* or pouring of *damp-heat*; internal hemorrhoids at the initial or second stage with above symptoms.

Usage and dosage 3 tablets, 3 times a day. 7 days making a clinical course, or follow doctor's advice.

Precaution (1) Contraindicated for pregnant women.

(2) Mild diarrhea can be seen in some patients and reduce the dosage to relieve the condition.
(3) It is not appropriate to use it to treat internal hemorrhoids due to portal hypertension or habitual constipation. Treatment for primary disease should be combined.

Strength 0.3 g per tablet

Storage Preserve in tightly closed containers.

Zhikebao Pian
(止咳宝片)

Zhikebao Tablets

Ingredients Radix et Rhizoma Asteris; Exocarpium Citri Rubrum; Radix Platycodonis; Fructus Aurantii; Radix Stemonae; Fructus Schisandrae Chinensis; Pericarpium Citri Reticulatae; Rhizoma Zingiberis; Herba Schizonepetae; Extractum Pericarpii Papaveris; Radix et Rhizoma Glycirrhizae; Ammonii Chloridum; Radix Peucedani; Oleum Menthae Dementholatum.

Procedure Decoct Radix et Rhizoma Asteris and Radix et Rhizoma Glycirrhizae with water twice, 2 hours for each time, combine the decoctions and concentrate to a thick extract. Pulverize the other ingredients, except Oleum Menthae Dementholatum, Ammonium Chloridum and Extractum Pericarpi Papaveris, to coarse powder and mix thoroughly, macerate in 60% ethanol twice, 48 hours for each time, recover ethanol, concentrate to a thick extract, combine with the above thick extract of Radix et Rhizoma Asteris and Radix et Rhizoma Glycirrhizae, add a quantity of excipients, dry and smash, mix thoroughly with Extractum Pericarpium Papaveris and Ammonii Chloridum to make granules, dry, spray with Oleum Menthae Dementholatum, compress into 1000 tablets and coat with film.

Description Film coated tablets with brownish-black core; taste, slightly bitter and salty.

Identification (1) Pulverize 1 tablet, grind with 10 ml of water and filter. Add 10 ml of sodium hydroxide TS to the filtrate, heat to decompose; an ammonia vapour is produced, it turns the moistened red litmus TP to blue colour.
(2) Evaporate 20 ml of the test solution obtained under Assay to dryness, dissolve the residue in 1 ml of methanol as the test solution. To 10 mg of morphine CRS add 1 ml of 0.1 mol/L solution of hydrochloric acid in a 10 ml volumetric flask, dilute with methanol to volume and mix well as the reference solution. Carry out the method for thin layer chromatography (Appendix Ⅵ B), using silica gel G as the coating substance and a mixture of toluene, acetone, ethanol and concentrated ammonia TS (20 : 20 : 3 : 1) as the mobile phase. Apply separately 2-4 μl of each of the two solutions to the plate. After developing and removal of the plate, dry in air, and examine under ultraviolet light at 365 nm. The spot in the chromatogram obtained with the test solution corresponds in position and colour to the spot in the chromatogram obtained with the reference solution.
(3) Heat under reflux 30 tablets, removed the coats and pulverized, with 50 ml of methanol for 2 hours, filter and concentrate the filtrate to about 10 ml. Add 5 g of silica gel (100-120 mesh), stir well and dry. Apply to a column (1 cm in diameter), elute with 40 ml of chloroform. Collect the eluate and evaporate to dryness. Dissolve the residue in 1 ml of chloroform as the test solution. Prepare a solution of 1 g of Fructus Schisandrae Chinensis in the same manner as the reference drug solution. Dissolve Schisandrin CRS in chloroform to produce a solution containing 1 mg per ml as the reference solution. Carry out the method for thin layer chromatography (Appendix Ⅵ B), using silica gel GF_{254} mixed with sodium carboxymethylcellulose as the coating substance and the upper layer of the mixture of petroleum ether (30-60℃), ethyl formate and formic acid (15 : 5 : 1) as the mobile phase. Apply separately 4 μl of the above three solutions to the plate. After developing 18 cm and removal of the plate, dry in air, and examine under ultraviolet light at 254 nm. The spots in the chromatogram obtained with the test solution correspond in position and colour to the spots in the chromatogram obtained with the reference drug solution and reference solution.
(4) Ultrasonicate 5 tablets, removed the coats and pulverized, with 25 ml of ethanol for 10 minutes, filter and evaporate the filtrate to dryness. Dissolve the residue in 2 ml of ethanol as the test solution. Prepare a solution of 1 g of Radix et Rhizoma Asteris in the same manner as the reference drug solution. Carry out the method for thin layer chromatography (Appendix Ⅵ B), using silica gel G mixed with sodium carboxymethylcellulose as the coating substance and a mixture of toluene, ethyl acetate, methanol and formic acid (20 : 10 : 1 : 1) as the mobile phase. Apply separately 2 μl of the above two solutions to the plate. After developing and removal of the plate, dry in air, and examine under ultraviolet light at 365 nm. The fluorescent spots in the chromatogram obtained with the test solution correspond in position and colour to the spots in the chromatogram obtained with the reference drug solution.

Other requirements Comply with the general requirements for tablets (Appendix Ⅰ D).

Assay *Reference solution* Weigh accurately a quantity of morphine CRS, previously dried to constant weight at 105℃, dissolve in 0.1 mol/L solution of hydrochloric acid to produce a solution containing 60 μg per ml.

Test solution Weigh accurately 30 tablets, removed coats, pulverize to fine powder, weigh accurately a quantity of the powder, equivalent to about 6 mg of anhydrous morphine, grind with 1 g of calcium hydroxide and a quantity of water to paste and continue grinding for 15 minutes. Transfer to a 100 ml volumetric flask, dilute with water to volume, shake thoroughly, and allow to stand for 30 minutes. Filter through a dry filter paper, measure accurately 50 ml of the successive filtrate, add 0.5 g of ammonium sulfate and shake to dissolve. Extract with successive quantities of 25 ml and 15 ml of benzene, combine benzene extracts, wash with 10 ml of water, combine the washing to the water layer, extract with 60 ml of a mixture of chloroform and ethanol (1 : 1), and extract with successive quantities of 45 ml , 45 ml and 15 ml of a mixture of chloroform and ethanol (2 : 1). Combine the extracts, wash with a mixture of 10 ml of water and 5 ml of ethanol, evaporate the extract to dryness on a water bath. Disslove the residue in 20 ml of 0.1 mol/L solution of hydrochloric acid, heat if necessary, and filter to a 50 ml volumetric flask, wash the container with hydrochloric acid solution, combine to the flask, dilute with 0.1 mol/L solution of hydrochloric acid to volume and mix well.

Procedure Measure accurately two quantities of 5 ml of the test solution to stopper tube A and B, and two quantities of 5 ml of the reference solution to tube C and D separately. Add accurately and separately 3 ml of ammonia TS in tube A and C, mix well, and add accurately and separately 2ml of freshly prepared ethanolic sodium nitrite TS. Add accurately and separately 2 ml of freshly prepared ethanolic sodium nitrite TS firstly in tube B and D, shake gently, and after 15 minutes, add accurately and separately 3 ml of ammonia TS. Allow to stand for 10 minutes. Carry out the method for

ultraviolet spectrophotometry and colourimetry (Appendix Ⅴ A), taking tube A and C solution as the blank and measure the absorbance of the tube B and D at 420 nm, and calculate the content of anhydrous morphine, multiply by 0.92.

It contains not less than 0.54 mg and no more than 0.66 mg of morphine per tablet, calculated as anhydrous morphine ($C_{17}H_{19}NO_3$).

Action To disseminate the lung and expel phlegm, and relieve coughing and dyspnea.

Indications Coughing with expectoration of profuse thin phlegm, shortness of breath from severe coughing due to affliction from external *wind-cold*; chronic bronchitis and upper respiratory tract infection with above symptoms.

Usage and dosage 2 tablets, 3 times a day, or follow doctor's advice. 7 days in succession making a course of treatment. Patients may take 3-5 courses continuously.

Precaution It is forbidden to prescribe to pregnant or breast-feeding women and babies. Be cautious about patients who bring up bloody sputum or with dry cough caused by *lung-heat* or *lung-dryness*. Avoid catching cold again and cold food, hot pepper and wine.

Strength 0.35 g per tablet

Storage Preserve in tightly closed containers, protected from light.

Zhike Juhong Koufuye (止咳橘红口服液)

Zhike Juhong Mixture

Ingredients Exocarpium Citri Grandis 66 g; Pericarpium Citri Reticulatae 44 g; Rhizoma Pinelliae Praeparatum 33 g; Poria 44 g; Flos Farfarae 22 g; Radix et Rhizoma Glycirrhizae 22 g; Pericarpium Trichosanthis 44 g; Radix et Rhizoma Asteris 33 g; Radix Ophiopogonis 44 g; Rhizoma Anemarrhenae 22 g; Radix Platycodonis 33 g; Radix Rehmanniae 44 g; Gypsum Fibrosum 44g; Semen Armeniacae Amarum (peeled and stir-baked) 44 g; Fructus Perillae (stir-baked) 33 g.

Procedure Decoct Gypsum Fibrosum, in coarse powder, with water 2 times, 1 hour for each time, and filter. Distill Exocarpium Citri Grandis, Pericarpium Citri Reticulatae, Flos Farfarae and Semen Armeniacae Amarum, collect 250 ml of the distillate, filter the aqueous solution, add ethanol to a content of 60% ethanol, stir well, stand for 24 hours, and filter. Combine the other 10 ingredients, in coarse powder, with the above residue, and mix thoroughly, carry out the method for percolation described under liquid extracts and extracts (Appendix Ⅰ O), macerate for 24 hours, using 60% ethanol as the solvent, collect 2700 ml of the percolate and combine with the above filtrates, recover ethanol to no ethanolic smell in vacuum, combine with the above decoction of Gypsum Fibrosum and concentrate to a thin extract with a relative density of 1.06 (50℃). Add 80 g of sucrose, boil, stand for 24 hours and filter. To the filtrate add 0.3 g of ethyl *p*-hydroxybenzoate and 0.5 g of benzoic acid, both previously dissolved in an appropriate quantity of hot water in advance, and the above distillate, adjust the total volume to 950 ml with water, stir well, refrigerate for 48 hours, separate the supernatant, filter, pack, seal and sterilize.

Description A brownish-black liquid; odour, aromatic; taste, sweet and slightly bitter.

Identification (1) To 2 ml add 1 ml of ammonium oxalate TS; a white precipitate is produced. Separate the precipitate, which is soluble in hydrochloric acid, but insoluble in acetic acid.

(2) To 40 ml add 3 ml of hydrochloric acid, heat on a water bath for 1 hour, and cool. Extract under shaking with 30 ml of ether, separate the ether extract, evaporate to dryness, dissolve the residue in 1 ml of chloroform as the test solution. Decoct 2 g of Radix Ophiopogonis reference drug with water for 30 minutes, and filter. Concentrate the filtrate to 40 ml, and prepare a solution in the same manner as the reference drug solution. Carry out the method for thin layer chromatography (Appendix Ⅵ B), using silica gel G as the coating substance and a mixture of chloroform and acetone (4∶1) as the mobile phase. Apply separately 5-10 μl of each of the two solutions to the plate. After developing and removal of the plate, dry in air, spray with 10% sulphuric acid in ethanol, and heat at 105℃ for about 5 minutes. The spots in the chromatogram obtained with the test solution correspond in position and colour to the spots in the chromatogram obtained with the reference drug solution.

(3) To 20 ml add 3 ml of hydrochloric acid, heat on a water bath for 1 hour, and cool. Extract with two 15-ml quantities of chloroform, combine the chloroform extracts, evaporate to dryness, and dissolve the residue in 1 ml of chloroform as the test solution. Dissolve glycyrrhetinic acid CRS in dehydrated ethanol to produce a solution containing 1mg per ml as the reference solution. Carry out the method for thin layer chromatography (Appendix Ⅵ B), using silica gel G as the coating substance and a mixture of petroleum ether (30-60℃), benzene, ethyl acetate and glacial acetic acid (10∶20∶7∶0.5) as the mobile phase. Apply separately 15 μl of each of the two solutions to the plate. After developing and removal of the plate, dry in air, spray with 10% phosphomolybdic acid in ethanol and heat at 105℃ for about 5 minutes. The spot in the chromatogram obtained with the test solution corresponds in position and colour to the spot in the chromatogram obtained with the reference solution.

Relative density 1.05-1.15 (Appendix Ⅶ A).

pH value 4.5-6.0 (Appendix Ⅷ G).

Other requirements Comply with the general requirements for mixtures (Appendix Ⅰ J).

Assay Carry out the method for high performance liquid chromatography (Appendix Ⅵ D).

Chromatographic system and system suitability Use octadecylsilane bonded silica gel as the stationary phase and a mixture of methanol, water and acetic acid (38∶62∶0.5) as the mobile phase. As detector a spectrophotometer set at 283 nm. Maintain the column temperature at 40℃. The number of theoretical plates of the column is not less than 3000, calculated with the reference to the peak of naringin.

Reference solution Weigh accurately 15 mg of naringin CRS, dried previously to constant weight at 110℃, in a 100 ml volumetric flask, dissolve in a quantity of methanol, dilute with methanol to volume, and mix well. Accurately measure 3 ml in a 10 ml volumetric flask, dilute with methanol to volume, and mix well (containing 45 μg of naringin per ml).

Test solution Measure accurately 1 ml of the mixture, in a 25 ml volumetric flask, dilute with methanol to volume, and mix well. Filter and use the successive filtrate as the test solution.

Procedure Inject accurately 10 μl of the reference solution and the test solution into the column, and calculate the content.

It contains not less than 0.80 mg of naringin ($C_{27}H_{22}O_{14}$) per ml, referred to Exocarpium Citri Grandis.

Action To clear the lung, relieve coughing and resolve phlegm.

Indications Coughing with expectoration of profuse phlegm, fullness in the chest and shortness of breath, dry and itching throat due to *phlegm-heat* retained in the lung.

Usage and dosage 10 ml, 2-3 times a day. Follow doctor's advice on the dosage for children.

Precaution Avoid pungent and greasy food.

Strength 10 ml per phial

Storage Preserve in tightly closed containers, stored in a cool and dark place.

Zhimaikang Jiaonang
(脂脉康胶囊)

Zhimaikang Capsules

Ingredients Camellia Pu'er 100 g; Radix et Rhizoma Seu Caulis Acanthopanacis Senticosi 100 g; Fructus Crataegi 100 g; Semen Raphani 50 g; Folium Nelumbinis 50 g; Radix Puerariae Lobatae 50 g; Flos Chrysanthemi 50 g; Radix Astragali 50 g; Rhizoma Polygonati 50 g; Radix Polygoni Multiflori 100 g; Fructus Leonuri 50 g; Cortex Eucommiae 50 g; Radix et Rhizoma Rhei (processed with wine) 30 g; Radix et Rhizoma Notoginseng 50 g; Flos Sophorae 100 g; Herba Taxilli 50 g.

Procedure The above sixteen ingredients, pulverize Radix Astragali, Radix Puerariae Lobatae to fine powder, sift, decoct the other fourteen ingredients with water for three times, 3 hours for the first time, 2 hours for the second time and 1 hours for the third time, Combine the decoctions, filter, concentrate the filtrate to a thick extract, dry, pulverize to fine powder, Add Radix Astragali, Radix Puerariae Lobatae fine powder, mix well, make to 1000 capsules.

Description Capsules containing Brown to brownish-brown powder; taste, slightly bitter and astringent.

Identification (1) To 4 g of the contents, add 30 ml of methanol, ultrasonicate for 30 minutes, and filter. Evaporate the filtrate to dryness, and dissolve the residue in 20 ml of water, extract with two 20-ml quantities of *n*-butanol saturated with water, combine the *n*-butanol extracts, wash by shaking, with two 20-ml quantities of ammonia TS. Separate the *n*-butanol solution, evaporate to dryness, and dissolve the residue in 1 ml of methanol as the test solution. Prepare a solution of 1 g of Radix Astragali reference drug in the same manner as the reference drug solution. Dissolve astragaloside Ⅳ CRS in methanol to produce a solution containing 1 mg per ml as the reference solution. Carry out the method for thin layer chromatography (Appendix Ⅵ B), using silica gel G as the coating substance, and a mixture of chloroform, methanol and water (13 : 7 : 2) as the mobile phase. Apply separately 5 μl of each of the three solutions to the plate. After developing and removal of the plate, dry in air. Spray with 10% sulfuric acid in ethanol and heat at 105℃ to the spots clear. The spot in the chromatogram obtained with the test solution corresponds in position and colour to the spot in the chromatogram obtained with the reference drug solution and the reference solution.

(2) To 4 g of the contents, add 50 ml of methanol, ultrasonicate for 30 minutes, and filter. Evaporate the filtrate to dryness, and dissolve the residue in 50 ml of water, wash with two 20-ml quantities of ether by shaking, discard the ether extract, wash with two 20-ml quantities of ethyl acetate, discard the ethyl acetate extract. Extract the water solution with two 20-ml quantities of *n*-butanol saturated with water, combine the *n*-butanol extracts, evaporate to dryness, and dissolve the residue in 1 ml of methanol as the test solution. To 2 g of Flos Sophorae reference drug, add 50 ml of water, decoct for 1 hour, filter while hot, evaporate the filtrate to dryness, and dissolve the residue in 2 ml of methanol as the reference drug solution. Dissolve rutin CRS in methanol to produce a solution containing 1 mg per ml as the reference solution. Carry out the method for thin layer chromatography (Appendix Ⅵ B), using silica gel G as the coating substance, and a mixture of ethyl acetate, methanol and water (8 : 1 : 1) as the mobile phase. Apply separately 4 μl of each of the three solutions to the plate. After developing and removal of the plate, dry in air. Spray with aluminum trichloride TS and heat at 105℃ for 10 minutes. Examine under ultraviolet light at 365 nm. The fluorescent spot in the chromatogram obtained with the test solution corresponds in position and colour to the spot in the chromatogram obtained with the reference drug solution and the reference solution.

Other requirements Comply with the general requirements for capsules (Appendix Ⅰ L).

Assay Carry out the method for high performance liquid chromatography (Appendix Ⅵ D)

Chromatographic system and system suitability Use Octadecylsilane bonded silica gel as the stationary phase and a mixture of methanol and water (25 : 75) as the mobile phase. As detector a spectrophotometer set at 250 nm. The number of theoretical plates of the column is not less than 4000, calculated with the reference to the peak of puerarin.

Reference solution Dissolve a quantity of puerarin CRS, accurately weighed, in 30% ethanol to produce a solution containing 20 μg per ml.

Test solution Weigh accurately about 0.2 g of the mixed contents, obtained under the test of weight variation, place in a stopper conical flask, add accurately 50 ml of 30% ethanol, weigh and ultrasonicate (power 250 W, frequency 20 kHz) for 30 minutes, allow to cool, weigh again, replenish the lost weight with 30% ethanol, mix well and filter, using the filtrate as the test solution.

Procedure Inject accurately 5μl of the reference solution and 10-15 μl of the test solution into the column, and calculate the content.

It contains not less than 0.5 mg of puerarin ($C_{21}H_{20}O_9$) per capsule, referred to Radix Puerariae.

Action To promote digestion, lower lipids, activate blood circulation, and replenish *qi* and nourish blood.

Indications Arteriosclerosis and hyperlipemia due to internal block age by stasis and a *deficiency* of *qi* and blood.

Usage and dosage 5 capsules, 3 times a day.

Strength 0.3 g per capsule

Storage Preserve in tightly closed containers.

Zhishi Daozhi Wan
(枳实导滞丸)

Zhishi Daozhi Pills

Ingredients Fructus Aurantii Immaturus (stir-baked) 100 g; Radix et Rhizoma Rhei 200 g; Rhizoma Coptidis

(stir-baked with ginger juice) 60 g; Radix Scutellariae 60 g; Massa Medicata Fermentata (stir-baked) 100 g; Rhizoma Atractylodis Macrocephalae (stir-baked) 100 g; Poria 60 g; Rhizoma Alismatis 40 g.

Procedure Pulverize the above eight ingredients to fine powder, sift, mix well, make pills with water and dry.

Description Pale brown to dark brown watered pills; odour, slightly aromatic; taste, bitter.

Identification (1) Microscopical: Irregular branched masses colourless, dissolved in chloral hydrate TS; hyphae colourless or pale brown, 4-6 μm in diameter. Prisms of calcium oxalate abundant in parenchyma. Clusters of calcium oxalate large, 60-140 μm in diameter. Needle crystals fine, 10-32 μm long, irregularly filling in parenchymatous cells. Fibres bundles bright yellow, walls slightly thickened with distinct pits. Bast fibres pale yellow, fusiform, walls thickened with fine pit-canals. Parenchymatous cells subrounded, with elliptic pits gathered into pit groups. Anticlinal walls of endodermis cells sinuous, relatively thickened, lignified, with sparse and fine pit-canals.

(2) Grind well 0.5 g of the pills, macerate in 20 ml of methanol for 10 minutes, and filter. Evaporate 10 ml of the filtrate to dryness, keep the other filtrate for later use. Dissolve the residue in 10 ml of water, add 1 ml of hydrochloric acid, and heat under reflux on a water bath for 30 minutes. Cool immediately, extract by shaking with 20 ml of ether in 2 portions, combine the extracts and evaporate to dryness. Dissolve the residue in 1 ml of chloroform as the test solution. Prepare a solution of 0.1 g of Radix et Rhizoma Rhei reference drug in the same manner as the reference drug solution. Carry out the method for thin layer chromatography (Appendix Ⅵ B), using silica gel H mixed with sodium carboxylmethylcellulose as the coating substance and the upper layer of a mixture of petroleum ether (30-60℃), ethyl formate and formic acid (15 : 5 : 1) as the mobile phase. Apply separately 4 μl of each of the two solutions to the plate. After developing and removal of the plate, dry in air, and examine under ultraviolet light at 365 nm. The five orange fluorescent spots in the chromatogram obtained with the test solution correspond in position and colour to the spots in the chromatogram obtained with the reference drug solution. Expose the plate to ammonia vapour and examine in daylight, the spots turn to red.

(3) Use the deserved filtrate obtained under Identification (2) as the test solution. Heat under reflux 10 mg of Rhizoma Coptidis reference drug with 10 ml of methanol on a water bath for 15 minutes, filter, and evaporate the filtrate to dryness. Dissolve the residue in 1 ml of methanol as the reference drug solution. Dissolve berberine hydrochloride CRS in methanol to produce a solution containing 0.5 mg per ml as the reference solution. Carry out the method for thin layer chromatography (Appendix Ⅵ B), using silica gel G mixed with sodium carboxylmethylcellulose as the coating substance and a mixture of *n*-butanol, water and glacial acetic acid (7 : 2 : 1) as the mobile phase. Apply separately 5 μl of the test solution, 2 μl of each of the reference drug solution and the reference solution to the plate. After developing and removal of the plate, dry in air, and examine under ultraviolet light at 365 nm. The yellow fluorescent spots in the chromatogram obtained with the test solution correspond in position and colour to the spots in the chromatograms obtained with the reference drug solution and the reference solution.

(4) Grind well 2 g of the pills, add 20 ml of methanol and ultrasonicate for 30 minutes. Filter, evaporate the filtrate to dryness, and dissolve the residue in 1 ml of methanol as the test solution. Dissolve baicalin CRS in methanol to produce a solution containing 0.5 mg per ml as the reference solution. Carry out the method for thin layer chromatography (Appendix Ⅵ B), using polyamide as the coating substance and acetic acid as the mobile phase. Apply separately 1 μl of each of the two solutions to the membrane. After developing and removal of the membrane, dry in air, spray with 1% ferric chloride in ethanol. The spot in the chromatogram obtained with the test solution corresponds in position and colour to the spot in the chromatogram obtained with the reference solution.

Other requirements Comply with the general requirements for pills (Appendix Ⅰ A).

Assay Grind the pills to fine pondes, weigh accurately 0.5 g into a Soxhlet' s extractor, heat under reflux with 90 ml of methanol on a water bath for 4 hours, filter immediately to a 100 ml volumetric flask; wash the container with a small amount of methanol, combine the washing with the filtrate, cool, dilute with methanol to the volume and mix well. Measure accurately 5 ml to a 25 ml volumetric flask, dilute with methanol to the volume, and shake well, use as the test solution. Dissolve hesperidin CRS, weighed accurately, in methanol to produce a solution containing 50 μg per ml as the reference solution. Carry out the method for thin layer chromatography (Appendix Ⅵ B), using polyamide as the coating substance and methanol as the mobile phase. Apply accurately 5 μl of the test solution and 2 μl, 5 μl of the reference solution to the membrane. After developing about 3 cm and removal of the membrane, dry in air, Spray with 1% of aluminum trichloride in menthanol, allow to stand for 3 hours, locate the position under ultraviolet light at 365 nm, carry out the method for thin layer chromatography (Appendix Ⅵ B, thin layer chromatographic scanning method), scan at wavelength of $\lambda = 300$ nm, with fluorescence mode, measure the integration value of the fluorescent intensity of the test solution and the reference solution and calculate.

It contains not less than 20.0 mg of hesperidin ($C_{28}H_{34}O_{15}$) per gram, referred to Fructus Aurantii Immaturus.

Action To promote digestion to remove retained food, and eliminate *damp-heat*.

Indications Distending pain in the stomach and abdomen, poor appetite, constipation, or dysentery with tenesmus due to retained food, and interior retention of *damp-heat*.

Usage and dosage 6-9 g, twice a day.

Storage Preserve in tightly closed containers, protected from moisture.

Zhisou Dingchuan Koufuye (止嗽定喘口服液)

Zhisou Dingchuan mixture

Ingredients Herba Ephedrae 1000 g; Semen Armeniacae Amarum 1000 g; Radix et Rhizoma Glycirrhizae 1000 g; Gypsum Fibrosum 1000 g.

Procedure Decoct the above ingredients, except Semen Armeniacae Amarum, with water twice, 1.5 hours for each time, combine the decoctions, filter and concentrate to a thin extract with a relative density of 1.05-1.10 (50℃). Allow to cool, add a quantity of ethanol, and stand. Seperate the supernatant, filter the remain portion, combine the filtrate and the supernatant, add 40% solution of sodium hydroxide to adjust to pH 8-8.5, stand and filter. Concentrate the filtrate to 1000 ml. Prepare Aqua Armeniacae with Semen Armeniacae Amarum. Dilute the concentrated decotion with a quantity of distilled water, stir well, add the Aqua Armeniacae, a quantity of honey, polysorbate 80 and sodium

benzoate, then add water to total volume. Adjust to pH 4.5-5.5 with citric acid, stir well, filter, stand, pack and sterilize.

Description A brownish-yellow liquid; odour, slightly aromatic; taste, sweet, slightly sour and astringent.

Identification (1) Alkalify 20 ml by adding several drops of concentrated ammonia TS, extract with 10 ml of chloroform with shaking, allow to stand, and separate the chloroform solution as the test solution. Dissolve ephedrine hydrochloride CRS in methanol to produce a solution containing 5 mg per ml as the reference solution. Carry out the method for thin layer chromatography (Appendix Ⅵ B), using silica gel G as the coating substance and a mixture of *n*-butanol, glacial acetic acid and water (8 : 2 : 1) as the mobile phase. Apply separately 10 μl of the test solution and 5 μl of the reference solution to the plate. After developing and removal of the plate, dry in air, spray with 0.5% solution of ninhydrin and heat at 105℃ for about 10 minutes. The spot in the chromatogram obtained with the test solution corresponds in position and colour to the spot in the chromatogram obtained with the reference solution.
(2) To 20 ml add 1 ml of hydrochloric acid and 20 ml of chloroform, heat under reflux for 1 hour, and cool. Separate the chloroform layer, filter through a dry filter paper, evaporate the filtrate to dryness and dissolve the residue in 2 ml of ethanol as the test solution. Dissolve glycyrrhetinic acid CRS in dehydrated ethanol to produce a solution containing 1 mg per ml as the reference solution. Carry out the method for thin layer chromatography (Appendix Ⅵ B), using silica gel G as the coating substances and a mixture of petroleum ether (30-60℃), benzene, ethyl acetate and glacial acetic acid (10 : 15 : 7 : 0.5) as the mobile phase. Apply separately 10 μl of each of the two solutions to the plate. After developing and removal of the plate, dry in air. Spray with 25% phosphomolybdic acid in ethanol and heat at 110℃ for about 10 minutes. The spot in the chromatogram obtained with the test solution corresponds in position and colour to the spot in the chromatogram obtained with the reference solution.

Relative density Not less than 1.04 (Appendix Ⅶ A).

PH value 4.5-5.5 (Appendix Ⅶ G).

Other requirements Comply with the general requirements for mixtures (Appendix Ⅰ J).

Action To expel *heat* with herbs pungent in flavor and cold in property, and clear the lung and relieve asthma/dyspnea.

Indications Feverish sensation of the body, thirst, coughing with expectoration of profuse phlegm, dyspnea, fullness and constriction in the chest, and acute bronchitis due to exterior cold and interior heat.

Usage and dosage 10 ml, 2-3 times a day. Appropriate reduction of the dosage for children.

Strength 10 ml per phial

Storage Preserve in tightly closed containers.

Zhisou Huatan Wan
(止嗽化痰丸)
Zhisou Huatan Pills

Ingredients Pericarpium Papaveris 625 g; Radix Platycodonis 250 g; Rhizoma Anemarrhenae 125 g; Radix Peucedani 125 g; Pericarpium Citri Reticulatae 125 g; Radix et Rhizoma Rhei (processed) 125 g; Radix et Rhizoma Glycirrhizae praeparata cum Melle 125 g; Bulbus Fritillariae Cirrhosae 125 g; Gypsum Fibrosum 250 g; Semen Armeniacae Amarum 187.5 g; Folium Perillae 125 g; Semen Lepidii seu Descurainiae 125g; Flos Farfarae (processed) 125 g; Radix Stemonae (processed) 125 g; Radix Scrophulariae 125 g; Radix Ophiopogonis 125 g; Flos Buddlejae 75 g; Radix Asparagi 125 g; Fructus Schisandrae Chinensis (processed) 75 g; Fructus Aurantii (stir-baked) 125 g; Semen Trichosanthis 125 g; Rhizoma Pinelliae (processed with ginger juice) 250 g; Radix Aucklandiae 75 g; Fructus Aristolochiae (processed) 125 g; Folium Mori 125 g.

Procedure Pulverize the above 25 ingredients to fine powder, sift and mix well. Make pills with water, dry and polish.

Description Yellowish-brown or brown watered pills; odour, slight; taste, bitter and slightly sour.

Identification (1) Microscopical: Clusters of calcium oxalate large, 60-140 μm in diameter. Fibre bundles surrounded by parechymatous cells, containing calcium oxalate prisms, forming crystal fibres. Epidermal stone cells of testa plae yellowish-brown, subpolygonal in surface view; walls relatively thickened, with fine pit-canals; lumina containing dark brown substances.
(2) Heat under reflux 20 g of the pills, pulverized to fine powder, in 40 ml of methanol for 1 hour, and filter immediately. Evaporate 30 ml of the filtrate to dryness, dissolve the residue with 30 ml of 1% solution of hydrochloric acid, allow to stand, and filter. To the filtrate add concentrated ammonia TS, adjust to pH 10, extract with two 20-ml quantities of chloroform, combine the extracts and evaporate to dryness. Dissolve the residue in 1 ml of methanol as the test solution. Prepare a solution with 1 g of Pericarpium Papaveris reference drug in the same manner as the reference drug solution. Carry out the method for thin layer chromatography (Appendix Ⅵ B), using silica gel G as the coating substance mixed with 2% solution of sodium hydroxide and a mixture of toluene, acetone, ethanol and concentrated ammonia TS (20 : 20 : 3 : 1) as the mobile phase. Apply separately 5 μl of each of the two solutions to the plate. After developing and removal of the plate, dry in air, examine under ultraviolet light at 365 nm. The fluorescent spots in the chromatogram obtained with the test solution correspond in position and colour to the spots in the chromatogram obtained with the reference drug solution. Spray with potassium iodobismuthate TS and sodium nitrite TS successively, the spots in the chromatogram obtained with the test solution correspond in position and colour to the spots in the chromatogram obtained with the reference drug solution.
(3) Evaporate the remained filtrate obtained under Identification test (2) to dryness, dissolve the residue in 10 ml of water, and add 1 ml of hydrochloric acid. Heat under reflux for 30 minutes, allow to cool, and extract with two 20-ml quantities of ether. Combine the extracts, evaporate to dryness, dissolve the residue in 1 ml of chloroform as the test solution. Prepare a solution with 0.1 g of Radix et Rhizoma Rhei reference drug in the same manner as the reference drug solution. Carry out the method for thin layer chromatography (Appendix Ⅵ B), using silica gel H mixed with sodium carboxymethylcellulose as the coating substance and the upper layer of a mixture of petroleum ether (30-60℃), ethyl formate and formic acid (15 : 5 : 1) as the mobile phase. Apply separately 2 μl of each of the two solutions to the plate. After developing and removal of the plate, dry in air, and expose to ammonia vapour. The five red spots in the chromatogram obtained with the test solution correspond in position to the five red

spots in the chromatogram obtained with the reference drug solution.

Other requirements Comply with the general requirements for pills (Appendix Ⅰ A).

Action To remove *heat* and phlegm from the lung, and relieve coughing and asthma.

Indications Retention of *phlegm-heat* in the lung, chronic coughing, hemoptysis, asthma with adverse flow of *qi* and insomnia caused by asthma.

Usage and dosage 15 pills, once a day, taken before going to bed.

Precaution Contraindicated for patients with cough caused by *wind-cold*.

Strength 1 g per 6-7 pills

Storage preserve in tightly closed containers, protected from moisture.

Zhitong Huazheng Jiaonang (止痛化癥胶囊)

Zhitong Huazheng Capsules

Ingredients Radix Codonopsis 75 g; Radix Astragali praeparata Cum Melle 150 g; Rhizoma Atractylodis Macrocephalae (parching) 45 g; Radix et Rhizoma Salviae Miltiorrhizae 150 g; Radix Angelicae Sinensis 75 g; Caulis Spatholobi 150 g; Rhizoma Sparganii 45 g; Rhizoma Curcumae 45 g; Semen Euryales 75 g; Rhizoma Dioscoreae 75 g; Rhizoma Corydalis 75 g; Fructus Toosendan 45 g; Herba Houttuyniae 150 g; Herba Patriniae 150 g; Scolopendra 1.8 g; Scorpio 75 g; Eupolyphaga seu Steleophaga 75 g; Rhizoma Zingiberis Praeparatum 22.5 g; Cortex Cinnamomi 15 g.

Procedure pulverize Scolopendra, Scorpio, Eupolyphaga seu Steleophaga to fine powder, decoct the other 16 ingredients with water for three times, 3 hours for the first time, 2 hours for the second time and 1 hour for the third time. Combine the decoctions and filter, concentrate the decoction to a thick extract, and add above fine power. Mix thoroughly, make granules, and make to 1000 capsules.

Description Capsules containing dark brown or blackish-brown powder; odour, slightly aromatic; taste, bitter, slightly salty.

Identification (1) To 9 g of the content, pulverized to powder, add 50 ml of methanol, ultrasonicate for 30 minutes, and filter. Dissolve the residue in 30 ml of water, extract with two 30-ml quantities of n-butanol saturated with water, combine *n*-butanol extracts and wash with 3 times volume ammonia TS, shake well, allow to stand. Transfer the *n*-butanol layer, and evaporate to dryness, dissolve the residue in 1 ml of methanol as the test solution. Dissolve astragaloside Ⅳ CRS in methanol to produce a solution containing 1 mg per ml as the reference solution. Carry out the method for thin layer chromatography (Appendix Ⅵ B), using silica gel G as the coating substance and the lower layer of a mixture of chloroform, methanol, and water (13 : 7 : 2) as the mobile phase. Apply separately 5 μl of the test solution and 2 μl of the reference solution to the plate. After developing and removal of the plate, dry in air. Spray with a 10% sulfuric acid in ethanol, and heat at 105℃ to the spots clear. The spot in the chromatogram obtained with the test solution corresponds in position and colour to the spot in the chromatogram obtained with the reference solution.

(2) To 6 g of the content, pulverized to powder, add 3 ml of concentrated ammonia TS and 40 ml of chloroform, stir well, allow to stand for 1 hour, then ultrasonicate for 30 min, and filter. Evaporate the filtrate to dryness, and dissolve the residue in 1 ml of methanol as the test solution. Dissolve tetrahydropalmatine CRS in methanol to produce a solution containing 1 mg per ml as the reference solution. Carry out the method for thin layer chromatography (Appendix Ⅵ B), using silica gel G mixed with 1% solution of sodium hydroxide as the coating substance and a mixture of n-hexane, chloroform, and methanol (7.5 : 4 : 1) as the mobile phase. Apply separately 2-3 μl of each of the test solution and the reference solution to the plate. After developing and removal of the plate, dry in air, expose to iodine vapour to the spots clear and examine under ultraviolet light at 365 nm. The fluorescent spot in the chromatogram obtained with the test solution corresponds in position and colour to the spot in the chromatogram obtained with the reference solution.

Other requirements Comply with the general requirements for capsules (Appendix Ⅰ L).

Assay Carry out the method for high performance liquid chromatography (Appendix Ⅵ D).

Chromatographic system and system suitability Use octadecylsilane bonded silica gel as the stationary phase, and a mixture of methanol, water, dimethylformamide, and glacial acetic acid (2 : 95 : 2 : 1) as the mobile phase. As detector a spectrophotometer set at 283 nm. The number of theoretical plates of the column is not less than 6000, calculated with the reference to the peak of danshensu.

Reference solution Weigh accurately a quantity of sodium danshensu CRS, dissolve in 50% methanol to produce a solution containing 50 μg per ml (correspond to 45 μg danshensu per ml).

Test solution Weigh accurately 1 g of the content obtained under the test of weight variation, pulverized to fine powder, in a stopper conical flask, add accurately 50 ml of a solution of hydrochloric acid (1→50), closely stopper and weigh. Ultrasonicate for 30 minutes (power 250 W, frequency 50 kHz), cool, weigh again, replenish the lost weight with a solution of hydrochloric acid (1→50), add 5 g of sodium chloride, stir well and centrifuge. Transfer accurately 25 ml of the supernatant to a separating funnel, extract by shaking with one 50-ml, one 30-ml, and two 20-ml quantities of ethyl acetate. Combine the ethyl acetate, and evaporate on a water bath to dryness, dissolve the residue in 50% methanol, transfer to a 10 ml volumetric flask and dilute to volume, mix well and filter, and use the successive filtrate as the test solution.

Procedure Inject accurately 10 μl of each of the reference solution and the test solution into the column respectively and measure.

It contains not less than 0.20 mg of danshensu ($C_9H_{10}O_5$) per capsule, referred to Radix et Rhizoma Salviae Miltiorrhizae.

Action To replenish *qi* to promote blood circulation, and dissipate nodules and kill pain.

Indications Irregular menstruation, dysmenorrhea and abdominal masses due to a *deficiency* of *qi* and stagnation of blood with manifestations of delayed menstrual cycles with scanty menstrual blood and clots, dysmenorrhea and abdominal masses; chronic pelvic inflammatory diseases with above symptoms.

Usage and dosage 4-6 capsules, 2 or 3 times a day.

Precaution Contraindicated for pregnant women.

Strength 0.3 g per capsule

Storage Preserve in tightly closed containers.

Zhitong Zijin Wan
(止痛紫金丸)

Zhitong Zijin Pills

Ingredients Flos Caryophylli 50 g; Sanguis Draconis 50 g; Radix Angelicae Sinensis 50 g; Radix et Rhizoma Rhei (prepared) 50 g; Radix Aucklandiae 50 g; Catechu 50 g; Flos Carthami 50 g; Rhizoma Drynariae (scalded) 50 g; Eupolyphaga seu Steleophaga 25 g; Olibanum (processed) 25 g; Myrrha (processed) 25 g; Radix Paeoniae Rubra 25 g; Pyritum (calcined) 25 g; Radix et Rhizoma Glycyrrhizae 25g.

Procedure Pulverize the above fourteen ingredients to fine powder, sift and mix thoroughly. To each 100 g of powder add 80-90 g of refined honey to make big honeyed pills.

Description Blackish-brown big honeyed pills; odour, slightly fishy; taste, bitter and astringent.

Identification (1) Place 3 g, in pieces, in a test tube, add 10 ml of dilute hydrochloric acid TS, cover the tube with a piece of lead acetate TP, heat on a water bath for 5 minutes, a stinking smell is produced and the lead acetate TP turns gradually to brown colour. Filter the solution, to the filtrate add potassium ferrocyanide TS; a blue precipitate is produced, which turns to brown precipitate on adding sodium hydroxide TS.

(2) Heat 2 g, in pieces, with 10 ml of 25% solution of sulfuric acid for 1 hour in a water bath, cool, add 15 ml of chloroform and heat under reflux on a water bath for 30 minutes. Separate the chloroform layer and evaporate to dryness. Dissolve the residue in 2 ml of methanol, filter and use the filtrate as the test solution. Prepare a solution of 0.6 g of Radix et Rhizoma Rhei reference drug in the same manner as the reference drug solution. Carry out the method for thin layer chromatography (Appendix Ⅵ B), using silica gel G mixed with sodium carboxymethylcellulose as the coating substance and the upper layer of a mixture of benzene, ethyl acetate, formic acid, methanol and water (30∶10∶0.5∶2∶5) as the mobile phase. Apply separately 5 μl of each of the two solutions to the plate. After developing and removal of the plate, dry in air and examine under ultraviolet light at 365 nm. The orange fluorescent spots in the chromatogram obtained with the test solution correspond in position and colour to the spots in the chromatogram obtained with the reference drug solution. The colour of the spots turns to red on exposure to ammonia vapour.

Other requirements Comply with the general requirements for pills (Appendix Ⅰ A).

Action To relax muscles and tendons and promote blood circulation, and eliminate blood stasis to kill pain.

Indications Traumatic injuries, lumbar sprain, bruise and painful tendons and bones.

Usage and dosage 1 pill, twice a day.

Precaution Contraindicated for pregnant women.

Strength 6 g per pill

Storage Preserve in tightly closed containers.

Zhizhu Wan
(枳术丸)

Zhizhu Pills

Ingredients Fructus Aurantii Immaturus (stir-baked) 250 g; Rhizoma Atractylodis Macrocephalae (stir-baked) 500 g.

Procedure Pulverize the above two ingredients to fine powder, sift and mix thoroughly. Decoct 75 g of Folium Nelumbinis with water, filter. Make pills with the decoction and the above powder, and dry.

Description Brown watered pills; odour, slightly aromatic; taste, slightly bitter.

Identification (1) Microscopical: Prisms of calcium oxalate abundant in parenchyma. Needle crystals of calcium oxalate fine, 10-32 μm long, irregularly filling in parenchymatous cells.

(2) Pulverize 3 g of the pills, add 30 ml of ether, heat under reflux on a water bath for 1 hour, filter, evaporate the filtrate to dryness, dissolve the residue in 1 ml of ethyl acetate as the test solution. Prepare a solution of 1 g of Rhizoma Atractylodis Macrocephalae reference drug in the same manner as the reference drug solution. Carry out the method for thin layer chromatography (Appendix Ⅵ B), using silica gel G as the coating substance and a mixture of petroleum ether (60-90℃) and ethyl acetate (50∶1) as the mobile phase. Apply separately 1 μl of each of the two solutions to the plate. After developing and removal of the plate, spray with 10% vanillin in sulfuric acid, heat to the spots clear. The spots in the chromatogram obtained with the test solution correspond in position and colour to the spots in the chromatogram obtained with the reference drug solution.

(3) Pulverize 3 g of the pills, add 20 ml of methanol, heat under reflux on a water bath for 1 hour, filter, evaporate the filtrate to dryness, dissolve the residue in 5 ml of methanol, filter and use the filtrate as the test solution. Prepare a solution of 1 g of Fructus Aurantii Immaturus reference drug in the same manner as the reference drug solution. Dissolve synephrine CRS in ethanol to produce a solution containing 2 mg per ml as the reference solution. Carry out the method for thin layer chromatography (Appendix Ⅵ B), using silica gel G as the coating substance and a mixture of chloroform, acetone, methanol and concentrated ammonia TS (13∶4∶3∶0.5) as the mobile phase. Apply separately 2 μl of each of the three solutions to the plate. After developing and removal of the plate, dry in air, spray with 0.5% ninhydrin in ethanol, heat at 105℃ for about 10 minutes. The pink spots in the chromatogram obtained with the test solution correspond in position and colour to the spots in the chromatogram obtained with the reference drug solution. The spot in the chromatogram obtained with the test solution corresponds in position and colour to the spot in the chromatogram obtained with reference solution.

Other requirements Comply with the general requirements for pills (Appendix Ⅰ A).

Action To invigorate the spleen to promote digestion, and promote *qi* flow to resolve *dampness*.

Indications Less intake of food and indigestion, fullness in the abdomen due to hypofunctioning of the spleen and stomach.

Usage and dosage 6 g, twice a day.

Storage Preserve in tightly closed containers.

Zhizi Jinhua Wan
(栀子金花丸)
Zhizi Jinhua Pills

Ingredients Fructus Gardeniae 116 g; Rhizoma Coptidis 4.8 g; Radix Scutellariae 192 g; Cortex Phellodendri Chinensis 60 g; Radix et Rhizoma Rhei 116 g; Flos Lonicerae Japonicae 40 g; Rhizoma Anemarrhenae 40 g; Radix Trichosanthis 60 g.

Procedure Pulverize the above eight ingredients to fine powder, sift and mix well. Make pills with water and dry.

Description Yellow to yellowish-brown watered pills; taste, bitter.

Identification (1) Microscopical: Phloem fibres pale yellow, fusiform, walls thickened, with fine pit-canals. Fibre bundles bright yellow, with slightly thickened walls and distinct pits. Fibre bundles bright yellow, surrounded by cells containing prisms of calcium oxalate, forming crystal fibres, walls of crystal cells lignified and thickened. Needles crystal of calcium oxalate in bundles or scattered, 26-110 μm long, Clusters of calcium oxalate large, 60-140 μm in diameter. Stone cells of testa yellow or pale brown, mostly broken, when whole, long polygonal, rectangular or irregular in shape, walls thickened, with large rounded pits, lumina brownish-red. Pollen grains subspherical, up to 76 μm in diameter, with spinous sculptures and 3 germinal pores Bordered pitted vessels large, mostly broken, some bordered pits hexagonal or rhombic, closely arranged.

(2) To 2 g, in powder, add 10 ml of ether, shake for 10 minutes, discard ether, and evaporate to dryness. Heat the residue under reflux in 20 ml of ethyl acetate for 1 hour, cool, filter, and evaporate the filtrate to dryness. Dissolve the residue in 2 ml of methanol, filter, and use the filtrate as the test solution. Dissolve geniposide CRS in methanol to produce a solution containing 1 mg per ml as the refernce solution. Carry out the method for thin layer chromatography (Appendix Ⅵ B), using silica gel G as the coating substance and a mixture of ethyl acetate, acetone, formic acid and water (10 : 6 : 2 : 0.5) as the mobile phase. Apply separately 5 μl of each of the two solutions to the plate. After developing and removal of the plate, dry in air, spray with 10% sulfuric acid in ethanol, heat at 105℃ for about 10 minutes. The spot in the chromatogram obtained with the test solution corresponds in position and colour to the spot in the chromatogram obtained with the reference solution.

(3) Wash the residue obtained under Identification (2) with two 5-ml quantities of ethyl acetate, discard the washings and expel ethyl acetate remained in the residue. Macerate the residue in 15 ml of methanol for 30 minutes with constant shaking, filter, and evaporate the filtrate to dryness. Dissolve the residue in 2 ml of methanol, filter, and use the filtrate as the test solution. Dissolve baicalin CRS in methanol to produce a solution containing 1 mg per ml as the refernce solution. Carry out the method for thin layer chromatography (Appendix Ⅵ B), using silica gel G as the coating substance and a mixture of ethyl acetate, butanone, formic acid and water (5 : 3 : 1 : 1) as the mobile phase, Apply separately 5 μl of each of the two solutions to the plate. After developing and removal of the plate, dry in air and spray with 1% ferric chloride in ethanol. The spot in the chromatogram obtained with the test solution corresponds in position and colour to the spot in the chromatogram obtained with the reference solution.

(4) Heat 3 g of the pills, pulverized to fine powder, in 10 ml of 25% solution of sulfuric acid, on a water bath for 1 hour, cool, then add 15 ml of chloroform, and heat under reflux for 30 minutes. Separate the chloroform layer and evaporate to dryness, dissolve the residue in 2 ml of methanol, filter, and use the filtrate as the test solution. Prepare 0.6 g of Radix et Rhizoma Rhei reference drug as the reference drug solution in the same manner. Carry out the method for thin layer chromatography (Appendix Ⅵ B), using silica gel H mixed with sodium carboxymethylcellulose as the coating substance and the upper layer of a mixture of petroleum ether (30-60℃), ethyl formate and formic acid (15 : 5 : 1) as the mobile phase. Apply separately 5 μl of each of the two solutions to the plate. After developing and removal of the plate, dry in air. The five yellow spots in the chromatogram obtained with the test solution correspond in position and colour to the spots in the chromatogram obtained with the reference drug solution. The spots turn to red on exposure to ammonia vapour.

(5) Pulverize 20 g of the pills to fine powder and apply to a column (1.5-2 cm in diameter) packed with 5 g of neutral aluminium oxide (200-300 mesh), elute with 50 ml of dehydrated ethanol, collect the eluate. Evaporate the eluate to dryness, dissolve the residue in 2 ml of ethanol as the test solution. To 0.05 g of Rhizoma Coptidis reference drug, add 5 ml of methanol, ultrasonicate for 15 minutes, filter, dilute the filtrate with methanol to 5 ml as the reference drug solution. Dissolve berberine hydrochloride CRS in methanol to produce a solution containing 0.5 mg per ml as the reference solution. Carry out the method for thin layer chromatography (Appendix Ⅵ B), using silica gel G as the coating substance and a mixture of benzene, ethyl acetate, isopropanol, methanol and concentrated ammonia TS (12 : 6 : 3 : 3 : 1) as the mobile phase. Apply separately to the plate 4 μl of the test solution and 1 μl of each of the reference drug solution and the reference solution. After developing in a chamber pre-equilibrated by ammonia vapour and removal of the plate, dry in air and examine under ultraviolet light at 365 nm. The yellow fluorescent spots in the chromatogram obtained with the test solution correspond in position and colour to the spots in the chromatogram obtained with the reference drug solution. The yellow fluorescent spot in the chromatogram obtained with the test solution corresponds in position and colour to the spot in the chromatogram obtained with the reference solution.

Other requirements Comply with the general requirements for pills (Appendix Ⅰ A).

Assay Carry out the method for high performance liquid chromatography (Appendix Ⅵ D).

Chromatographic system and system suitability Use octadecyasilane bonded silica gel as the stationary phase and a mixture of acetonitrile and water (11 : 89) as the mobile phase. As detector a spectrophotometer set at 238 nm. The number of theoretical plates of the column is not less than 2000, calculated with the reference to the peak of geniposide.

Reference solution Dissolve a quantity of geniposide CRS, accurately weighed, in 50% methanol to prepare a solution containing 30 μg per ml as the reference solution.

Test solution Grind well the watered pills, weigh accurately 1 g in a stopper conical flask, add accurately 50 ml of 50% methanol, stopper well, and weigh. Ultrasonicate (power 300 W, frequency 50 kHz) for 20 minutes, cool, weigh again; replenish the loss of weight with 50% methanol, shake well and filter. Measure accurately 10 ml of the successive filtrate to a 25 ml volumetric flask, dilute with 50% methanol to volume, shake well, filter, and use the successive filtrate as the test

solution.

Procedure Inject accurately 10 μl of each of the reference solution and the test solution into the column, respectively, and calculate the content.
It contains not less than 2.8 mg of geniposide ($C_{17}H_{24}O_{10}$) per gram, referred to Fructus Gardeniae.

Action To clear *heat* and purge *fire*, and cool blood and relieve *toxicity*.

Indications Sores on the mouth and tongue, or swollen painful gums, or bloodshot eyes, dizziness, or swollen painful throat, or hematemesis, epistaxis and constipation due to extremely abundant *heat* in the lung and stomach.

Usage and dosage 9 g, once a day.

Precaution Used with caution in pregnancy.

Storage Preserve in tightly closed containers, protected from moisture.

Zhongfeng Huichun Pian (中风回春片)

Zhongfeng Huichun Tablets

Ingredients Radix Angelicae Sinensis (processed with wine) 30 g; Rhizoma Chuanxiong (processed with wine) 30 g; Flos Carthami 10 g; Semen Persicae 30 g; Radix et Rhizoma Salviae Miltiorrhizae 100 g; Caulis Spatholobi 100 g; Caulis Lonicerae Japonicae 100 g; Caulis Trachelospermi 60 g; Pheretima (stir-baked) 90 g; Eupolyphaga seu Steleophaga (stir-fried) 30 g; Herba Lycopodii 60 g; Radix Cyathulae 100 g; Scolopendra 5 g; Fructus Leonuri (stir-baked) 30 g; Scorpio 10 g; Radix et Rhizoma Clematidis (processed with wine) 30 g; Bombyx Batryticatus (stir-baked with bran) 30 g; Fructus Chaenomelis 50 g; Bungarus Parvus 6 g.

Procedure Pulverize a half quantity of Radix Angelicae Sinensis, Rhizoma Chuanxiong, Pheretima, Eupolyphaga seu Steleophaga, Scolopendra, Bungarus Parvus, Scorpio, Bombyx Batryticatus and Radix et Rhizoma Salviae Miltiorrhizae to fine powder and sift. Decoct the remained quantity and the other 10 ingredients with water for 2 times, 2 hours for the first time and 1.5 hours for the second. Combine the decoctions, filter and allow the filtrate to stand for 24 hours. Seperate the supernatant, then concentrate to a thick extract with a relative density of 1.20-1.30. Add the fine powder, mix thoroughly, make granules, dry, compress into 1000 tablets and coat with sugar.

Description Sugar coated tablets with brown core; taste, bitter.

Identification (1) Microscopical: crystals subrounded or round clusters of calcium oxalate filling in parenchymatous cells. Muscular fibres, colourless to pale brown, slightly wavy, sometimes vertically crisscrossed. Body pieces colourless, with very fine hyphae on the surface. Body pieces pale yellow or yellow with reticulate striations and rounded alveo, somtimes showing dark brown setae.
(2) To 10 tablets, removed sugar coats and finely powdered, add 20 ml of methanol, heat under reflux for 1 hour, and filter. Evaporate the filtrate to almost dryness, and dissolve the residue in 1 ml of ethyl acetate as the test solution. To 0.5 g of Radix Angelicae Sinensis reference drug add 20 ml of methanol, heat under reflux for 30 minutes, and filter. Evaporate the fitrate to dryness, and dissolve the residue in 1 ml of ethanol as the reference drug solution. Carry out the method for thin layer chromatography (Appendix Ⅵ B), using silica gel G as the coating substance and a mixture of toluene, ethyl acetate and formic acid (2 : 1 : 0.1) as the mobile phase. Apply separately to the plate 5 μl of each of the two solutions. After developing and removal of the plate, dry in air, examine under ultraviolet light at 365 nm. The fluorescent spots in the chromatogram obtained with the test solution correspond in position and colour to the spots in the chromatogram obtained with the reference drug solution.

Other requirements Comply with the general requirements for tablets (Appendix Ⅰ D).

Action To promote blood circulation, to resolve stagnant blood, and relax muscles and tendons and dredge meridians.

Indications Stroke due to blockage of meridians by accumulated *phlegm* with manifestations of hemiplegia, numbness of limbs, dysphasia and deviated mouth and eye.

Usage and dosage 4-6 tablets, 3 times a day, or follow doctor's advice.

Precaution Contraindicated for patients with acute cerebral hemorrhage.

Storage Preserve in tightly closed containers.

Zhongfeng Huichu Wan (中风回春丸)

Zhongfeng Huichu Pills

Ingredients Radix Angelicae Sinensis (processed with wine) 30 g; Rhizoma Chuanxiong (processed with wine) 30 g; Flos Carthami 10 g; Semen Persicae 30 g; Radix et Rhizoma Salviae Miltiorrhizae 100 g; Caulis Spatholobi 100 g; Caulis Lonicerae Japonicae 100 g; Caulis Crachelospermi 60 g; Pheretima (stir-baked) 90 g; Eupolyphaga seu Steleophaga (stir-baked) 30 g; Herba Lycopodii 60 g; Radix Cyathulae 100 g; Scolopendra 5 g; Fructus Leonuri (stir-baked) 30 g; Scorpio 10 g; Radix et Rhizoma Clematidis (processed with wine) 30 g; Bombyx Batryticatus (stir-baked with bran) 30 g; Fructus Chaenomelis 50 g; Bungarus Parvus 6 g.

Procedure Pulverize Radix Angelicae Sinensis, Rhizoma Chuanxiong, Pheretima, Eupolyphaga seu Steleophaga, Scolopendra, Bungarus Parvus, Scorpio, Bombyx Batryticatus and half quantities of Radix et Rhizoma Salviae Miltiorrhizae to fine powder. Decoct the other ten ingredients and the remained quantities of Radix et Rhizoma Salviae Miltiorrhizae 2 times, 2 hours for the first and 1.5 hours for the second time. Combine the decoctions, filter and allow to stand for 24 hours. Separate the supernatant, concentrate to an appropriate amount, add the above fine powder, mix well, dry, triturate to fine powder, make pills, coat and dry.

Prescription Brown to reddish-brown coated concentrated watered pills with blackish-brown core; taste, bitter.

Identification (1) Microscopical: Muscle fibers colourless to pale brown, sinuous, or crisscross arranged. Fragments of body walls colourless, with very fine hyphae on the surface. Fragments of body walls yellow or brownish-red with rounded setae pits, 8-24 μm in diameter, setae in varying length often visible. Fragments of traches walls with brown or yellowish-green helical filaments, 1-5 μm wide, with almost colourless punctiform masses between filaments. Fragments of body walls pale yellow to yellow, with reticular striations and rounded setae pits, sometimes brown setae visible.

(2) Grind 5 g of the pills, extract with 50 ml of ethyl acetate under reflux for 30 minutes, filter, and concentrate the filtrate to about 2 ml as the test solution. Prepare a solution of 2 g of Caulis Japonicae Lonicerae reference drug in 20 ml of ethyl acetate in the same manner as the reference drug solution. Carry out the method for thin layer chromatography (Appendix Ⅵ B), using silica gel G as the coating substance and a mixture of benzene, ethyl acetate and formic acid (8 : 2 : 1) as the mobile phase. Apply separately 2-4 μl of each of the two solutions to the plate. After developing and removal of the plate, dry in air, examine under ultraviolet light at 365 nm. The fluorescent spots in the chromatogram obtained with the test solution correspond in position and colour to the spots in the chromatogram obtained with the reference drug solution.
(3) Grind 20 g of the pills, extract with 50 ml of 70% ethanol under reflux for 2 hours, filter, evaporate the filtrate to dryness, and dissolve the residue in 10 ml of hot water. Adjust to pH 2 with dilute hydrochloric acid TS, and extract with three 15-ml quantities of ether by shaking. Combine the ether extracts, evaporate to dryness, and dissolve the residue in 5 ml of ethyl acetate as the test solution. Prepare a solution of 6 g of Radix et Rhizoma Salviae Miltiorrhizae reference drug in 30 ml of 70% ethanol in the same manner as the reference solution. Carry out the method for thin layer chromatography (Appendix Ⅵ B), using silica gel G as the coating substance and a mixture of benzene, ethyl acetate and formic acid (10 : 8 : 1.5) as the mobile phase. Apply separately 2 μl of each of the two solutions to the plate. After developing and removal of the plate. dry in air, examine under ultraviolet light at 365 nm. The fluorescent spots in the chromatogram obtained with the test solution correspond in position and colour to the spots in the chromatogram obtained with the reference drug solution.
(4) Grind 10 g of the pills, extract with 50 ml of chloroform under reflux for 1.5 hours, filter and concentrate the filtrate to about 5 ml as the test solution. Prepare a solution of 2 g of Rhizoma Chuanxiong reference drug in the same manner as the reference solution. Carry out the method for thin layer chromatography (Appendix Ⅵ B), using silica gel GF_{254} as the coating substance and a mixture of benzene and ethyl acetate (10 : 1) as the mobile phase. Apply separately 2 μl of each of the two solutions to the plate. After developing and removal of the plate, dry in air, examine under ultraviolet light at 254 nm. The spots in the chromatogram obtained with the test solution correspond in position and colour to the spots in the chromatogram obtained with the reference drug solution.

Other requirements Comply with the general requirements for pills (Appendix Ⅰ A)

Assay Carry out the method for high performance liquid chromatography (Appendix Ⅵ D).

Chromatographic system and system suitability Use octadecylsilane bonded silica gel as the stationary phase and a mixture of methanol and 1% solution of acetic acid (5 : 95) as the mobile phase. As detector a spectrophotometer set at 280 nm. The number of theoretical plates of the column is not less than 3000, calculated with the reference to the peak of danshensu.

Reference solution Weigh accurately a quantity of sodium danshensu CRS, in 50% methanol to produce a solution containing 40 μg per ml as the reference solution (equivalent to 36 μg of danshensu).

Test solution Grind well a quantity of pills, weigh accurately 0.4 g in a stopper conical flask, add accurately 25 ml of 50% methanol, stopper tightly, weigh and ultrasonicate (power, not less than 300 W, frequency, not less than 50 kHz) for 30 minutes, cool, and replenish the loss of weight with 50% methanol, shake well, centrifuge, filter the supernatant, and use the successive filtrate as the test solution.

Procedure Inject accurately 20 μl of each of the reference solution and the test solution into the column, respectively, and calculate the content.
It contains not less than 0.9 mg of danshensu ($C_9H_{10}O_5$) per gram, referred to Radix et Rhizoma salviae Miltiorrhizae.

Action To promote blood circulation to resolve stagnant blood, and relax muscles and tendons and dredge meridians.

Indications Stroke due to blockage of meridians by accumulated phlegm with manifestations of hemiplegia, numbness of limbs, dysphasia and deviated mouth and eye.

Usage and dosage 1.2-1.8 g, 3 times a day, taken with warm water, or follow doctor's advice.

Precaution Contraindicated for patients with acute cerebral hemorrhage.

Strength (1) 16 g per bottle (2) 1.8 g per pack

Storage Preserve in tightly closed containers.

Zhonghua Dieda Wan
(中华跌打丸)

Zhonghua Dieda Pills

Ingredients Herba Hedyotidis 76.8 g; Herba Piperis Sarmentosi 76.8 g; Herba Hyperici Japonici 76.8 g; Herba Smilacis Ripariae 76.8 g; Herba Centipedae 76.8 g; Radix Achyranthis Bidentatae 76.8 g; Radix Linderae 76.8 g; Cortex Parabarii seu Ecdysantherae 76.8 g; Herba Breyniae 76.8 g; Folium Glycosmis Parviflorae 76.8 g; Herba Inulae 76.8 g; Herba Artemisiae anomalae 76.8 g; Caulis Entadae 76.8 g; Herba Hyptis Suaveolentis 76.8 g; Radix Cudraniae 76.8 g; Radix Zanthoxyli 76.8 g; Caulis Spatholobi 76.8 g; Cacumen Claoxyli 76.8 g; Radix Ilicis Asprellae 76.8 g; Semen Momordicae 76.8 g; Radix et Caulis Solani 76.8 g; Rhizoma Begoniae 76.8 g; Radix Angelicae Pubescentis 76.8 g; Rhizoma Atractylodis 76.8 g; Semen Impatientis 76.8 g; Fructus Gardeniae Grandiflorae 76.8 g; Radix Aconiti Praeparata 38.4 g; Flos Caryophylli 38.4 g; Rhizoma Cyperi 153.6 g; Radix Kadsurae Coccineae 153.6 g, Ramulus Cinnamomi 15.36 g; Camphor 3.84 g.

Procedure Pulverize Camphor into fine powder, grind the other 31 ingredients into fine powder, sift, mix well with the above powder of Camphor. To each 100 g of powder add 25-45 g of refined honey and a quantity of water to make pills, macerate with 10% solution of glutin, coat with a quantity of ferriferous oxide and dry to make water honeyed pills; or add 140-170 g of refined honey, make big honeyed pills.

Description Dark brown to blackish-brow water-honeyed pills or big honeyed pills; taste, sweet, slightly pungent.

Identification (1) Grind 7 g of the water-honeyed pills into powder; or cut 7 g of the big honeyed pills into pieces, carry out the method for determination of volatile oil (Appendix Ⅹ D), add 2 ml of ethyl acetate through the top of the apparatus, heat slightly to boil for 1 hours. Allow to cool, use the ethyl acetate layer as the test solution. Macerate 0.2 g of Radix Angelicae Pubescentis reference drug with 2 ml of acetone over night, use the supernatant as the reference drug solution. Dissolve eugenol CRS in ether to produce a solution, containing 16 μg per ml as the reference

solution. Carry out the method for thin layer chromatography (Appendix Ⅵ B), using silica gel G mixed with sodium carboxymethylcellulose as the coating substance and a mixture of cyclohexane and ethyl acetate (8.5 : 1.5) as the mobile phase. Apply separately 1 μl of each of the test solution, the reference solution, and the reference drug solution to the plate. After developing and removing the plate, dry in air, spray with 20% perchloric acid in ethanol, heat at 105℃ to the spots clear, and examine under ultraviolet light at 365 nm. The spots in the chromatogram obtained with the test solution correspond in position and colour to the spots in the chromatogram obtained with the reference solution and the reference drug solution.

(2) To 0.2 g of Rhizoma Atractylodis reference drug, add 2 ml of acetone, macerate over night, use the supernatant as the test solution. Carry out the method for thin layer chromatography (Appendix Ⅵ B), using silica gel G mixed with sodium carboxymehylcellulose as the coating substance and a mixture of cyclohexane and ethyl acetate (4 : 0.1) as the mobile phase. Apply separately 3 μl of each of the test solution, obtained under the Identification (1), and the above reference drug solution to the plate. After developing and removing the plate, dry in air, spray with 5% *p*-dimethylaminobenzaldehyde in a solution of 10% sulfuric acid in ethanol, heat at 105℃ to spots clear. The spots in the chromatogram obtained with the test solution correspond in position and colour to the spots in the chromatogram obtained with the reference drug solution.

(3) Dissolve α-cyperone CRS in ethyl acetate to produce a solution containing 1 mg per ml as the reference solution. Carry out the method for thin layer chromatography (Appendix Ⅵ B), using silica gel G mixed with sodium carboxymethylcellulose as the coating substance and a mixture of petroleum ether (60-90℃), benzene and ethyl acetate (10 : 1 : 1) as the mobile phase. Apply separately 6 μl of each of the test solution, obtained under the Identification (1), and the above reference solution to the plate. After developing and removing the plate, dry in air, spray with dinitrophenylhydrazine TS, and allow to stand for a few minutes. The orange-red spot in the chromatogram obtained with the test solution corresponds in position and colour to the spot in the chromatogram obtained with the reference solution.

Other requirements Comply to the general requirements for pills (Appendix Ⅰ A).

Assay Carry out the method for high performance liquid chromatography (Appendix Ⅵ D).

Chromatographic system and system suitability Use octadecylsilane bonded silica gel as the stationary phase and a mixture of acetonitrile and water (13 : 87) as the mobile phase. As detector a spectrophotometer set at 238 nm. The number of theoretical plates of the column is not less than 3000, calculated with the reference to the peak of geniposide.

Reference solution Weigh accurately a quantity of geniposide CRS, dissolve in methanol to produce reference solution containing 80 μg per ml.

Test solution Grind the water honeyed pills into powder, weigh accurately 2 g; or cut the big honeyed pills, obtained under the test of weight variation, into pieces, weigh accurately 3 g. Add accurately 25 ml of methanol, weigh accurately, heat under reflux on a water bath for 30 minutes, allow to cool, weigh again, and replenish the lost weight with methanol. Shaking thoroughly, filter, and use the successive filtrate as the test solution.

Procedure Inject accurately 10 μl of each of the reference solution and the test solution into the column, respectively, and calculate the content.

It contains not less than 0.60 mg of geniposide ($C_{17}H_{24}O_{10}$) per gram for the water-honeyed pill, and 3.0 mg per big honeyed pill, referred to Fructus Gardeniae.

Action To reduce swelling to kill pain, relax muscles and tendons and dredge meridians, arrest bleeding to generate new tissues, and promote blood circulation to remove blood stasis.

Indications Injury of tendons and bones, recent or old congestion with pain, traumatic hemorrhage and painful congestion due to *wind-dampness*.

Usage and dosage 3 g for water honeyed pills, and 1 pill for big honeyed pill, twice a day. Reduce to half of the dosage for children and weak patients.

Precaution Contraindicated for pregnant women; not applied to an opening wound with bleeding.

Strength (1) 3 g per 66 water honeyed pills
(2) 6 g per big honeyed pill

Storage Preserve in tightly closed containers.

Zhongjing Weiling Wan
(仲景胃灵丸)

Zhongjing Weiling Pills

Ingredients Cortex Cinnamomi; Rhizoma Corydalis; Concha Ostreae; Fructus Foeniculi; Fructus Amomi; Rhizoma Alpiniae Officinarum; Radix Paeoniae Alba; Radix et Rhizoma Glycyrrhizae Praeparata Cum Melle.

Procedure Decoct Radix Paeoniae Alba and Radix et Rhizoma Glycyrrhizae Praeparata Cum Melle with water for twice, 2 hours for each time. Combine the decoction, filter and concentrate to a thick extract. Pulverize the other six ingredients to fine powder, add the above thick extract, mix thoroughly, dry and pulverize to fine powder. Sift and mix thoroughly. Make pills with water, coat with Pulvis Fumi Carbonisatus, polish, and dry.

Description Blackish-brown concentrated watered pills; odour, aromatic; taste, acrid and sweet.

Identification (1) Microscopical: Stone cells subsquare or subrounded, 32-88 μm in diameter, walls humble in one side. Fragment of thick-walled tissue greenish-yellow, cells polygonal or elongated, walls slightly sinuous, some beaded, fitted pitted. Minute cluster of calcium oxalate, about 5 μm in diameter, containing several cluster in one cell. Thick-walled cells of endotesta reddish-brown or yellow-brown, polygonal in surface view, thick-walled, lumen containing a silica body. Starch granules wooden stick-like, 24-44 μm long or longer, hilum spotted.

(2) Macerate 5 g of the pills, triturated to powder, in 2 ml of concentrated ammonia TS and 20 ml of chloroform for 1 hour, shake constantly, and filter. Evaporate the filtrate to dryness and dissolve the residue in 1 ml of ethanol as the test solution. Dissolve tetrahydropalmatine CRS in methanol to produce a solution containing 1 mg per ml as the reference solution. Carry out the method for thin layer chromatography (Appendix Ⅵ B), using silica gel G as the coating substances and a mixture of *n*-hexane, chloroform, methanol and diethylamine (10 : 6 : 1 : 0.1) as the mobile phase. Apply separately 20 μl of the test solution and 2 μl of the reference solution to the plate. After developing in the chamber pre-equilibrated for 20 minutes with the mobile phase, and removal of the plate, dry in air. Spray with

dilute potassium iodobismuthate TS. The spot in the chromatogram obtained with the test solution corresponds in position and colour to the spot in the chromatogram obtained with the reference solution.

(3) Triturate 5 g of the pills to fine powder, macerate in 30 ml of ether for 1 hour, shake constantly, filter, and concentrate the filtrate to about 1 ml as the test solution. Dissolve cinnamaldehyde CRS in ethanol to produce a solution containing 1 μl per ml as the reference solution. Carry out the method for thin layer chromatography (Appendix Ⅵ B), using silica gel G as the coating substances and a mixture of petroleum ether (60-90℃) and ethyl acetate (17 : 3) as the mobile phase. Apply separately 20 μl of the test solution and 2 μl of the reference solution to the plate. After developing and removal of the plate, dry in air. Spray with alcoholic dinitrophenylhydrazine TS. The red spot in the chromatogram obtained with the test solution corresponds in position and colour to the spot in the chromatogram obtained with the reference solution.

Other requirements Comply with the general requirements for pills (Appendix Ⅰ A).

Assay Carry out the method for high performance liquid chromatography (Appendix Ⅵ D).

Chromatographic system and system suitability Use octadecylsilane bonded silica gel as the stationary phase and a mixture of 0.05 mol/L potassium dihydrogen phosphate solution and acetonitrile (85 : 15) as the mobile phase. As detector a spectrophotometer set at 230 nm. The number of theoretical plates of the column is not less than 2000, calculated with reference to the peak of paeoniflorin.

Reference solution Dissolve 10 mg of paeoniflorin CRS, accurately weighed, in 50% methanol in a 25 ml volumetric flask, dilute to volume and mix well. Mesure accurately 1 ml in a 10 ml volumetric flask, dilute with 50% methanol to volume, and mix well (containing 40 μg of paeoniflorin per ml).

Test solution Weigh accurately 1.5 g of the pills, triturated to fine powder, in a conical flask with stopper, add accurately 20 ml of 50% methanol, stopper, weigh, and ultrasonicate for 1 hour. Allow to cool, weigh again and replenish the lost weight with 50% methanol. Mix thoroughly, centrifuge, measure accurately 5 ml of the supernatant and evaporate to dryness. Dissolve the residue in water and transfer to a column (1.5 cm in diameter, 10 cm long) packed with macroporous absorbency resins D101, wash with 100 ml of water, and elute with 80 ml of 50% methanol. Collect the eluate and evaporate to dryness. Dissolve the residue with 50% methanol to a 10 ml volumetric flask and dilute to volume. Filter with microporous film (0.45 μm), use the filtrate as the test solution.

Precedure Inject accurately 10 μl of each of the reference solution and the test solution into the column and determine. It contains not less than 0.70 mg of paeoniflorin ($C_{23}H_{28}O_{11}$) per gram, referred to Radix Paeoniae Alba.

Action To warm the *middle-energizer* to expel cold, and strengthen the stomach and kill pain.

Indications Cold in the spleen and stomach in the *deficiency* syndrome with manifestations of cold pain in the stomach, poor appetite, fullness in the abdomen, casting up of gastric acid or vomiting of watery fluid.

Usage and dosage 1.2 g, 3 times a day. Appropriate reduction of dosage for children.

Strength 1.2 g per pack

Storage Perverse in well closed containers.

Zhuanggu Guanjie Wan
(壮骨关节丸)

Zhuanggu Guanjie Pills

Ingredients Rhizoma Cibotii; Herba Epimedii; Radix Angelicae Pubescentis; Rhizoma Drynariae; Radix Dipsaci; Herba Taxilli; Caulis Spatholobi; Radix Rehmanniae Praeparata; Radix Aucklandiae; Olibanum; Myrrha.

Procedure Pulverize a half quantity of Olibanum, Myrrha, Radix Aucklandiae, Radix Angelicae Pubescentis and a quarter quantity of Rhizoma Drynariae, Radix Dipsaci, Radix Rehmanniae Praeparata and Caulis Spatholobi to fine powder and sift; decoct the remains of the above ingredients and the other four ingredients with water, filter, and concentrate the filtrate in vacuum to a thick extract with a relative density of 1.25-1.28 (60℃), mix thoroughly with the above powder, dry, pulverize to fine powder to make concentrated watered pills with water, and polish; or pulverize all the twelve ingredients to fine powder, sift, mix thoroughly and make pills with water, dry at a lower temperature, coat with carbonized Radix et Rhizoma Glycyrrhizae (or carbonized Radix Rehmanniae).

Description Black concentrated watered pills or watered pills; odour, aromatic; taste, slightly bitter.

Identification (1) Microscopical: Testa palisade cells pale brown or redish-brown, subpolygonal in surface view; walls slightly thickened; lumina containing redish-brown substances. Parenchyma greyish-brown to blackish-brown, cells usually shrunken, each containing a brown nucleus-like substances. Irregularly masses colourless or pale yellow, surfaces and edges diffusing with numerous tinny granules, dissolved on long standing. Irregular broken pieces pale yellow, translucent, with oil drops secreted. Fibre bundles brownish-yellow, surrounded by parenchymatous cells containing prisms of calcium oxalate, forming crystal fibres. Clusters of calcium oxalate about 45 μm in diameter, occurring in pale brownish-yellow shrunken parenchymatous cells, often several arranged in a row.

(2) Heat under reflux 5 g of pills, finely powdered, in 30 ml of petroleum ether (60-90℃) for 30 minutes, and filter. Evaporate the filtrate to dryness, and dissolve the residue in 1 ml of dehydrated ethanol as the test solution. Prepare a solution with 1 g of Radix Angelicae Pubescentis reference drug in the same manner as the reference drug solution. Carry out the method for thin layer chromatography (Appendix Ⅵ B), using silica gel G mixed with sodium carboxymethylcellulose as the coating substance and a mixture of petroleum ether (60-90℃) and ethyl acetate (1 : 1) as the mobile phase. Apply separately 10 μl of the test solution and 5 μl of the reference drug solution to the plate. After developing and removal of the plate, dry in air, examine under ultraviolet light at 365 nm. The purple fluorescent spots in the chromatogram obtained with the test solution correspond in position and colour to the spots in the chromatogram obtained with the reference drug solution.

(3) Expel solvent remained in the drug residue obtained under Identification test (2), add 30 ml of ethyl acetate, heat under reflux for 30 minutes, and filter. Evaporate the filtrate to dryness, and dissolve the residue in 1 ml of dehydrated ethanol as the test solution. Dissolve psoralen CRS in dehydrated ethanol to produce a solution containing 1 mg per ml as the reference solution. Carry out the method for thin layer chromatography (Appendix Ⅵ B), using silica gel G mixed with sodium carboxymethylcellulose as the coating substance and a mixture of *n*-hexane and ethyl acetate

(4 : 1) as the mobile phase. Apply separately 10 μl of each of the two solutions to the plate. After developing and removal of the plate, dry in air, examine under ultraviolet light at 365 nm. The fluorescent spot in the chromatogram obtained with the test solution corresponds in position and colour to the spot in the chromatogram obtained with the reference solution.

Other requirements Comply with the general requirements for pills (Appendix Ⅰ A).

Action To reinforce the liver and kidney, nourish blood and promote blood circulation, relax tendons and muscles and remove obstruction of meridians, and regulate flow of *qi* to kill pain.

Indications Osteo-arthritis and strain of lumbar muscles due to *deficiency* in the liver and kidney, stagnation of *qi* and blood and blockage of meridians with manifestations of swollen painful joints, numbness and immobilization.

Usage and dosage 10 g for concentrated watered pills, or 6 g for watered pills, twice a day. Taken after meals.

Storage Preserve in tightly closed containers.

Zhuanggu Shenjin Jiaonang (壮骨伸筋胶囊)

Zhuanggu Shenjin Capsules

Ingredients Herba Epimedii; Radix Rehmanniae Praeparata; Herba Pyrolae; Rhizoma Drynariae (stir-baked); Herba Cistanches; Caulis Spatholobi; Radix et Rhizoma Ginseng Rubra; Os Canidis; Poria; Radix et Rhizoma Clematidis; Herba Siegesbeckiae; Radix Puerariae Lobatae; Rhizoma Corydalis (processed with vinegar); Fructus Crataegi; Flos Daturae.

Procedure Pulverize Radix et Rhizoma Ginseng Rubra, Os Canidis, Poria, Rhizoma Corydalis to fine powder and pulverize Flos Daturae to fine powder. Decoct other ten ingredients 3 times, respectively 3 hours; 2 hours and 1 hour. Filter, combine the filtrates and concentrate to a thin extract with a relative density of 1.28-1.32 (60℃). Add fine powder of Radix et Rhizoma Ginseng Rubra, Os Canidis, Poria, and Rhizoma Corydalis, mix well, dry (60-80℃), and pulverize to fine powder. Add the fine powder of Flos Daturae, triturate with the above powder, sift, mix well, make granules, and pack into 1000 capsules.

Description Hard capsules with brown granular content; odour, slight, taste, slightly bitter.

Identification (1) Microscopical: Irregular branched masses colourless, dissolved in chloral hydrate TS, hyphae colourless or pale brown, 4-6 μm in diameter. Irregular massive sclerotin fragments colourless or pale yellow, with fine slit on surface, bone lacuna relatively abundant, subrounded or long fusiform, almost syntropically arranged. Pollen grains subrounded or oblong, 42-65 μm in diameter, with striated sculptures on surface. Gelatinized starch masses almost colourless or pale yellow. Clusters of calcium oxalate 20-68 μm in diameter, with acute angles.

(2) Extract 5 g of content with 30 ml of methanol under reflux for 1 hour, allow to cool, filer, and evaporate to dryness. Dissolve the residue in 15 ml of water, extract with two 15-ml quantities of *n*-butanol saturated with water, combine the *n*-butanol extracts, wash with 3 volumes of ammonia TS. Evaporate the n-butanol layer to dryness, and dissolve the residue in 1 ml of methanol as the test solution. Extract 1 g of Radix et Rhizoma Ginseng Rubra reference drug with 20 ml of methanol under reflux for 1 hour, filter, evaporate the filtrate to dryness, dissolve the residue in 10 ml of water, and prepare the reference drug solution in the same manner. Dissolve ginsenoside Rb_1 CRS, ginsenoside R_e CRS and ginsenoside Rg_1 CRS in methanol to produce a mixture containing 2 mg of each per ml as the reference solution. Carry out the method for thin layer chromatography (Appendix Ⅵ B), using silica gel G as the coating substance and the lower layer of a mixture of chloroform, methanol and water (13 : 7 : 2), standing below 10℃, as the mobile phase. Apply 4 μl of the test solution, 3 μl of the reference drug solution and 2 μl of the reference solution separately to the plate. After developing and removal of the plate, dry in air, spray with 10% sulfuric acid in ethanol and heat at 105℃ to the spots clear. The purplish-red spots in the chromatogram obtained with the test solution correspond in position and colour to the spots in the chromatogram obtained with the reference drug solution and reference solution.

(3) Extract 10 g of content with 70 ml of 80% ethanol under reflux for 1 hour, cool, filter, and evaporate the filtrate to dryness. Dissolve the residue in 30 ml of water, adjust to pH 9-10 with ammonia TS, extract with two 20-ml quantities of ether by shaking, combine the ether extracts, evaporate to dryness, dissolve the residue in 3 ml of dehydrated ethanol, and use it as the test solution. Dissolve tetrahydropalmatine CRS in dehydrated ethanol to produce a solution containing 1 mg per ml as the reference solution. Carry out the method for thin layer chromatography (Appendix Ⅵ B), using silica gel G as the coating substance and a mixture of *n*-hexane, chloroform, methanol and diethylamine (10 : 6 : 1 : 0.1) as the mobile phase. Apply separately 4 μl of the test solution and 3 μl of the reference solution to the plate. After developing and removal of the plate, dry in air, exposure to ammonia vapor to the spots clear. The spot in the chromatogram obtained with the test solution corresponds in position and colour to the spot in the chromatogram obtained with the reference solution.

Other requirements Comply with the general requirements for capsules (Appendix Ⅰ L).

Assay Carry out the method for high performance liquid chromatography (Appendix Ⅵ D).

Chromatographic system and system suitability Use octadecylsilane bonded silica gel as the stationary phase, a mixture of methanol and water (54 : 46) as the mobile phase. As detector a spectrophotometer set at 270 nm. The number of theoretical plates of the column is not less than 6000, calculated with the reference to the peak of icariine.

Reference solution Dissolve a quantity of icariine CRS, accurately weighed, in methanol to prepare a solution containing 80 μg per ml as the reference solution.

Test solution Weigh accurately 0.5 g of the content of the capsules, obtained in the test of weight variation, mix well, in a Soxhlet's extractor, heat under reflux with a quantity of 40 ml of chloroform for 2 hours, discard the chloroform solution. Evaporate the residue to dryness, add 40 ml of methanol, heat under reflux for 4 hours. Evaporate the extractor, moisten the residue with a quantity of methanol, dissolve in 2 ml of water, apply with a column of macroporous absorbency resins D101 (1.5 cm in diameter, 10 cm long), elute with 100 ml of water, 100 ml of 30% ethanol and 50 ml of 70% ethanol at the speed of 3 ml per minute. Collect the elute of 70% ethanol and evaporate to dryness. Dissolve the residue in methanol to a 5 ml of volumetric flask and dilute to the volume. Mix well and filter. Use the filtrate as the test solution.

Procedure Inject accurately 10 μl of the reference solution and 10-20 μl the test solution in to the column, and calculate the content.
It contents not less than 0.13 mg of icariine ($C_{33}H_{40}O_{15}$) per capsule, referred to Herba Epimedii.

Action To reinforce the liver and kidney, tone up muscles and bones, and activate meridians to kill pain.

Indications Nerve root-type cervical spondylosis due to *deficiency* in the liver and kidney and accumulation of *wind-dampness* with manifestations of pain and numbness of the arms and shoulders, and impeded movement of them.

Usage and dosage Oral application, 6 capsules, 3 times a day. 4 weeks making a course of treatment, or under supervision of a physician.

Precaution Overdosage is forbidden as it contains Flos Daturae; Be cautious about patients with hypertension or heart diseases; it is forbidden to prescribe to glaucoma patients and pregnant women.

Strength 0.3 g per capsule

Storage Preserve in tightly closed container.

Zhuche Wan
(驻车丸)

Zhuche Pills

Ingredients Rhizoma Coptidis 360 g; Rhizoma Zingiberis Praeparatum 120 g; Radix Angelicae Sinensis 180 g; Colla Corii Asini 180 g.

Procedure Pulverize the above four ingredients to fine powder, sift, mix thoroughly, make pills with 60 ml of vinegar and a quantity of water, and dry.

Description Yellowish-brown watered pills. Odour, slightly aromatic; taste, bitter, slightly pungent.

Identification (1) Microscopical: Fibre bundles bright yellow, walls relatively thick, pits distinct. Parenchymatous cells fusiform, walls slightly thickened, with very fine oblique crisscross striations. Starch granules elongated-ovoid, broadly ovate or irregular, 25-32 μm in diameter, hilum pointed, at the thinner end, striation well-marked.
(2) To 0.2 g of the powder, add 5 ml of methanol, ultrasonicate for 15 minutes, filter, and dilute the filtrate with methanol to 5 ml as the test solution. Dissolve berberine hydrochloride CRS in methanol to prepare a solution containing 0.5 mg per ml as the reference solution. Carry out the method for thin layer chromatography (Appendix Ⅵ B), using silica gel G as the coating substance and a mixture of benzene, ethyl acetate, methanol, isopropanol and concentrated ammonia TS (12 : 6 : 3 : 3 : 1) as the mobile phase. Apply separately to the plate 1 μl of each of the two solutions. After developing in a chamber pre-equilibrated with concentrated ammonia vapour and removal of the plate, dry in air, examine under ultraviolet light at 365 nm. The fluorescent spot in the chromatogram obtained with test solution corresponds in position and colour to the spot in the chromatogram obtained with the reference solution.
(3) To 1 g of the powder, add 10 ml of petroleum ether (30-60℃), ultrasonicate for 15 minutes, filter and evaporate the filtrate to dryness, and dissolve the residue in 1 ml of dehydrated ethanol as the test solution. Prepare a solution with 0.2 g of Radix Angelicae Sinensis reference drug in the same manner as the reference drug solution. Carry out the method for thin layer chromatography (Appendix Ⅵ B), using silica gel G as the coating substance and a mixture of *n*-hexane and ethyl acetate (9 : 1) as the mobile phase. Apple separately to the plate 4 μl of each of the two solutions. After developing and removal of the plate, dry in air, examine under ultraviolet light at 365 nm. The fluroscent spots in the chromatogram obtained with the test solution correspond in position and colour to the spots in the chromatogram obtained with the reference drug solution.

Other requirements Comply with the general requirements for pills (Appendix Ⅰ A).

Assay Weight accurately 2 g of the powder, to a Soxhet's extrator, add a quantity of a mixture of hydrochloricacid and methanol (1 : 100) solution, heat under reflux until the extract colourless. Transfer the extract, concentrated if necessary, to a 50 ml volumetric flask, dilute with a mixture of hydrochloric acid and methanol (1 : 100) to volume and mix well. Carry out the method for column chromatography (Appendix Ⅵ C), apply accurately 5 ml of the solution to a column of aluminium oxide (0.9 cm in internal diameter, packed with 5 g of neutral aluminium oxide with ethanol, previously washed with 30 ml of ethanol), elute with 25 ml of ethanol in portions. Collect the eluate to a 50 ml volumetric flask, dilute with ethanol to volume and mix well. Transfer 2 ml, accurately measured, to a 50 ml volumetric flask, dilute with sulfuric acid (0.05 mol/L) to volume and shake well. Carry out the method for ultraviolet spectrophotometry and colourimetry (Appendix Ⅴ A), measure the absorbance at 345 nm, calculate the content, taking 728 as the value of A (1%, 1 cm).
It contains not less than 30.0 mg of total alkaloids per gram, calculated as berberine hydrochloride ($C_{20}H_{18}ClNO_4$), on the dried basis.

Action To nourish *yin* and relieve dysentery.

Indications Chronic dysentery characterized by *yin* impairment, bloody dysentery, abdominal pain and tenesmus, or recurrent dysentery.

Usage and dosage 6-9 g, 3 times a day.

Precaution Contraindicated for patients with accumulated *heat-dampness* and dysentery at the initial stage.

Strength 3 g per 50 pills

Storage Preserve in tightly closed containers.

Zhuhuang Chuihou Şan
(珠黄吹喉散)

Zhuhuang Chuihou Powder

Ingredients Margarita 50 g; Calculus Bovis Artifactus 30 g; Borax (calcined) 250 g; Mirabilitum Praeparatum 80 g; Realgar 40 g; Catechu 100 g; Rhizoma Coptidis 100 g; Cortex Phellodendri Chinensis 150 g; Borneolum Syntheticum 50 g.

Procedure Levigate or pulverize Margarita to very fine powder, and levigate Realgar to very fine powder, pulverize Borax, Catechu, Rhizoma Coptidis and Cortex Phellodendri Chinensis to fine powder, grind Calculus Bovis Artifactus and Borneolum Syntheticum to fine powder, triturate Mirabilitum Praeparatum with all the above powders, sift, and mix thoroughly.

Description A pale yellow powder; odour, aromatic; taste, bitter with cool sensation.

Identification (1) Microscopical: Fibre bundles bright yellow, surrounded by cells containing prisms of calcium oxalate, forming crystal fibres, walls of crystal cells

lignified and thickened. Fibres bundles bright yellow, walls slightly thickened, pits distinct. Irregular fragments colourless or pale green, translucent, lustrous, fine and sinuous striations visible occasionally. Irregular fragments golden yellow or orange-yellow, lustrous.
(2) Stir 0.3 g of the powder with 10 ml of chloroform and filter. Evaporate the filtrate to dryness, dissolve the residue in 1 ml of 60% acetic acid, add 1 ml of a freshly prepared 1% furfural solution and 5 ml of sulfuric acid (1→2) solution, heat at 70℃ for 10 minutes; a bluish-violet colour is produced gradually.
(3) Sublimate 0.2 g of the powder and dissolve the sublimate in 1-2 drops of ethanol. Add 1-2 drops of a freshly prepared 1% solution of vanillin in sulfuric acid; a purple colour is produced gradually.
(4) To 1 g of the powder add 5 ml of water, shake and filter. Acidify the filtrate with hydrochloric acid, apply a drop to a moistened curcuma TP, and dry; an orange-red colour is produced, which turns dark-green on exposure to ammonia vapour.

Other requirements Comply with the general requirements for powders (Appendix Ⅰ B).

Action To relieve *toxicity* and remove slough to promote regeneration of tissues.

Indications Painful, swollen or ulcerative throat, mouth and tongue due to retained *heat*.

Usage and dosage For external use, appropriate quantity to be insufflated to the lesion, 3-5 times a day.

Storage Preserve in tightly closed containers.

Zhuli Datan Wan
(竹沥达痰丸)

Zhuli Datan Pills

Ingredients Radix Scutellariae 200 g; Rhizoma Pinelliae (processed) 150 g; Radix et Rhizoma Rhei (processed with wine) 200 g; Exocarpium Citri Rubrum 200 g; Radix et Rhizoma Glycyrrhizae 100 g; Lignum Aquilariae Resinatum 50 g.

Procedure Pulverize the above 6 ingredients to fine powder, sift and mix thoroughly. Additionally take 200 g of Rhizoma Zingiberis Recens, smashed and squeeze to obtain juice, add 800 ml of Succus Bambusae, mix well and make pills with the above powder. Coat with very fine powder of 100 g of Lapis Chloriti and 30 g of Saltpetre, calcined and levigated, and dry.

Description Greenish-brown watered pills; odour, slightly aromatic; taste, bitter.

Identification (1) Microscopical: Bast fibres pale yellow, fusiform, walls thickened, with fine pit-canals. Needle crystals calcium oxalate in bundles, 32-144 μm long, filling in mucilage cells or singly scattered. Clusters of calcium oxalate large, 60-140 μm in diameter. Prisms of calcium oxalate abundant in parenchymatous cells. Fibre bundles surrounded by parenchymatous cells containing prisms of calcium oxalate, forming crystal fibres.
(2) Grind 2 g of the pills, add 10 ml of methanol, ultrasonicate for 30 minutes, and filter. Evaporate the filtrate to dryness, dissolve the residue in 1 ml of chloroform as the test solution. Prepare a solution of 0.1 g of Radix et Rhizoma Rhei reference drug in the same manner as the reference drug solution. Dissolve emodin CRS in methanol to produce a solution containing 1 mg per ml as the reference solution. Carry out the method for thin layer chromatography (Appendix Ⅵ B), using silica gel G mixed with sodium carboxymethylcellulose as the coating substance and the upper layer of petroleum ether (30-60℃), ethyl formate and formic acid (15 : 5 : 1) as the mobile phase. Apply separately 2 μl of each of the three solutions to the plate. After developing and removal of the plate, dry in air, exposure to ammonia vapour. The five orange-red spots in the chromatogram obtained with the test solution correspond in position and colour to the spots in the chromatogram obtained with the reference drug solution, and the orange-red spot in the chromatogram obtained with the test solution corresponds in position and colour to the spot in the chromatogram obtained with the reference solution.
(3) Grind 5 g of the pills with 5 g of kieselguhr, add 20 ml of ethyl acetate, heat under reflux for 1 hour, cool, and filter. To the drug residue add 20 ml of methanol, ultrasonicate for 20 minutes, and filter. Evaporate the filtrate to dryness, dissolve the residue in 2 ml of methanol as the test solution. Dissolve baicalin CRS in methanol to produce a solution containing 1 mg per ml as the reference solution. Carry out the method for thin layer chromatography (Appendix Ⅵ B), using silica gel G mixed with sodium carboxymethylcellulose containing 4% solution of sodium acetate and as the coating substance and a mixture of ethyl acetate, butanone, formic acid and water (5 : 3 : 1 : 1) as the mobile phase. Apply in strip separately 6 μl each of the two solutions to the plate. After developing and removal of the plate, dry in air, spray with 1% ferric chloride in ethanol. The strip in the chromatogram obtained with the test solution corresponds in position and colour to the strip in the chromatogram obtained with the reference solution.

Other requirements Comply with the general requirements for pills (Appendix Ⅰ A).

Action To eliminate obstinate phlegm and excessive heat, and regulate qi flow.

Indications Retention of obstinate phlegm in the lung, coughing and asthma with copious phlegm, constipation, or irritability and mania due to upward going of *heat* and *phlegm*.

Usage and dosage 6-9 g.

Precaution Be cautious about pregnant women.

Strength 3 g per 50 pills

Storage Preserve in well closed containers, protected from moisture.

Zhusheyong shuanghuanglian
[注射用双黄连(冻干)]

Shuanghuanglian for Injection

Ingredients Fructus Forsythiae; Flos Lonicerae Japonicae; Radix Scutellariae.

Procedure Decoct Radix Scutellariae with water for two times, one hour for each, filter, combine the filtrate, and adjust to pH 1.0-2.0 with 2 mol/L solution of hydrochloric acid. Allow to keep warm at 80℃ for 30 minutes, and stand for 12 hours. Filter, stir the precipitate with 8 volume of water, adjust to pH 6.0-7.0 with 40% solution of sodium hydroxide, add equal quantities of ethanol, stir to dissolve, and filter. To the filtrate adjust to pH 2.0, keep warm at 80℃ for 30 minutes, and stand for 12 hours, and filter. Wash the precipitate with ethanol to pH 4.0, add a quantity of water, stir, and adjust to pH 6.0-7.0. Add a quantity of activated charcoal, stir thoroughly, keep warm at 50℃ for

30 minutes, add 1 to 2 volume of ethanol and stir well. Filter, adjust the filtrate to pH 2.0 with 2 mol/L solution of hydrochloric acid, keep warm at 80℃ for 30 minutes, and stand for 12 hours. Filter, wash the precipitate with small quantities of ethanol, dry below 60℃ for further use. Macerate Flos Lonicerae Japonicae and Fructus Forsythiae with water for 30 minutes, decoct for two times, one hour for each, and filter. Combine the filtrates, concentrate to a thick extract of relative density of 1.20-1.25 (70-80℃), allow to stand to 40℃, and add slowly ethanol to make the content to 75% ethanol, and stir thoroughly. Stand for 12 hours, filter and recover solvent to ethanol odorless. Add 3 to 4 volumes of water, stand for 12 hours, concentrate the supernatant to a thin extract of relative density of 1.10-1.15 (70-80℃). Stand to 40℃, add ethanol to make the content of 85% ethanol, stand over 12 hours, filter, and recover solvent of the supernatant to ethanol odorless. To extract of Radix Scutellariae add a quantity of water, heat and dissolve by adjusting to pH 7.0 with 40% solution of sodium hydroxide. Mix with the above extract of Flos Lonicerae Japonicae and Fructus Forsythiae, add water to 1000 ml. add a quantity of activated charcoal, adjust to pH 7.0, heat to boil and keep boiling for 15 minutes. Stand to cool, filter, add water for injection to total volume, sterile, refrigerate, filter, concentrate, freeze to powder and pack.

Description Yellowish-brown irregular powder or loose mass; taste, bitter and astringent ; hygroscopic.

Identification (1) To 60 mg, add 5 ml of 75% methanol, ultrasonicate to dissolve as the test solution. Dissolve baicalin CRS, chlorogenic acid CRS in 75% methanol separately to produce two solutions each containing 0.1 mg per ml as the reference solutions. Carry out the method for thin layer chromatograply (Appendix Ⅵ B), using acetic acid as the mobile phase. Apply separately to a polyamide film 1 μl of each of the three solutions. After developing and removal of the film, dry in air, examine under ultraviolet light at 365 nm. The fluorescent spots in the chromatogram obtained with the test solution correspond in position and colour to the spots in the chromatogram obtained with the reference solutions.

(2) To 0.1 g, add 10 ml of methanol, ultrasonicate for 20 minutes, and allow to stand, and use the supernatant as the test solution. Prepare a solution of 0.5 g Fructus Forsythiae reference drug in the same manner as the reference drug solution. Carry out the method for thin layer chromatography (Appendix Ⅵ B), using silica gel G containing sodium carboxymethylcellulose as the coating substance and a mixture of chloroform and methanol (5 : 1) as the mobile phase. Apply separately 10 μl of each of the two solutions to the plate. After developing and removal of the plate, dry in air. Spray with a solution of 10% sulfuric acid in ethanol, heat at 100℃ until spots distinct. The spots in the chromatogram obtained with the test solution correspond in position and colour to the spots in the chromatogram obtained with the reference drug solution.

pH value 5.7-6.7 (Appendix Ⅶ G), 2.5 mg per ml in water.

Water Not more than 5.0 per cent (Appendix Ⅸ H, method 3).

Protein Dissolve 0.6g in 10 ml of water, transfer 2 ml to a test tube, add 1-3 drops of tannic acid TS; no opalescence is produced.

Tannin Dissolve 0.6 g in 10 ml of water, comply with the test for tannin (Appendix Ⅸ S), using 1 ml.

Resin Dissolve 0.6 g in 10 ml of water, transfer 5 ml into a separator, and extract with 10 ml of chloroform, comply with the test for Resin (Appendix Ⅸ S).

Oxalate Dissolve 0.6 g in 10 ml of water, adjust to pH 1-2 with dilute hydrochloric acid, filter warmly, adjust the filtrate to pH 5-6. To 2 ml of the solution, add 2-3 drops of 3% solution of calcium chloride, allow to stand for 10 minutes; no opalescence or precipitate is produced.

Potassium Comply with the test for potassium (Appendix Ⅸ S), using 0.12g.

Heavy metals Not more than 10 ppm (Appendix Ⅸ E, method 2), using 1.0 g.

Arsenic To 1.0 g, add 3 ml of 2% solution of magnesium nitrate in ethanol, fire to burn, after burning out heat gently until charred, ignite at 500-600℃ until incineration completed. Allow to cool, dissolve in 5 ml of hydrochloric acid and 21 ml of water. Comply with the limit test for arsenic (Appendix Ⅸ F, method I); not more than 2 ppm.

Pyrogens Dissolve 0.6 g in 10 ml of water for injection, comply with the test for pyrogens (Appendix Ⅺ A), using 3 ml per kg of the rabbit's weight.

Sterility Dissolve 0.6 g in water for injections to produce a solution of 60 mg per ml, comply with the test for sterility (Appendix Ⅷ B, membrane filtration method).

Haemolysis and agglutination *2% red blood cell, RBC, suspension* Measure a quantity of blood of rabbit or sheep, transfer it into a conical flask with glass beads, shake for 10 minutes, discard the fibrinogen, and collect the defibrin blood. To the defibrin blood, add 10 times volume of saline, shake well and centrifuge to remove supernatant. Wash the pellet with saline for 2 or 3 times until the supernatant becomes transparent, and then prepare the 2% RBC suspension with saline.

Test solution To 600 mg, add saline to dissolve and dilute to 20 ml with saline as the test solution.

No. of tubes	1	2	3	4	5	6
2% RBC suspension/ml	2.5	2.5	2.5	2.5	2.5	2.5
saline/ml	2	2.1	2.2	2.3	2.4	2.5
test solution/ml	0.5	0.4	0.3	0.2	0.1	0

Procedure Add the 2% RBC suspension and saline into 6 tubes according to the above proportions. Shake well, and keep it in 37℃ for 30 minutes. Then add 0.5 ml, 0.4 ml, 0.3 ml, 0.2 ml, 0.1 ml of the test solution into No. 1, No. 2, No. 3, No. 4, No. 5. of tubes respectively, No. 6 tube as the blank, and keep them in 37℃ for 2 hours. Examine the result every 15 minutes during the first hour and once for the second hour. Haemolysis and agglutination must not appear in the No. 3 tube within 2 hours.

Other requirements Comply with the general requirements for injections (Appendix Ⅰ U).

Assay ***Flos Lonicerae Japonicae*** Carry out the method for high performance liquid chromatography (Appendix Ⅵ D).

Chromatographic system and system suitability Use octadecyl silane bonded silica gel as the stationary phase and amixture of methanol, water, glacial acetic acid and triethylamine (15 : 85 : 1 : 0.3) as the mobile phase. As detector a spectrophotometer set at 324 nm. The number of theoretical plates of the column is not less than 6000, calculated with reference to the peak of chlorogenic acid.

Reference solution Dissolve a quantity of chlorogenic acid CRS in an umber volumetric flask, weighed accurately, in water to produce a solution containing 20 μg per ml.

Test solution Mix the contents obtained in the test of weight variation, weigh accurately 60 mg in a 50 ml

volumetric flask, dissolve and dilute to volume with water, and mix well.

Procedure Accurately inject 20 μl of each of the reference solution and the test solution, respectively, into the column, and determine the content.
It contains not less than 8.5 mg and not more than 11.5 mg chlorogenic acid ($C_{16}H_{18}O_9$) per vial, referred to Flos lonicerae Japonicae.

Radix Scutellariae Carry out the method for high performance liquid chromatography (Appendix Ⅵ D).

Chromatographic system and system suitability Use octadecylsilane boned silica gel as the stationary phase and a mixture of methanol, water and glacial acid (40 : 60 : 1) as the mobile phase. As detector a spectrophotometer set at 274 nm. The number of theoretical plates of the column is not less than 2000, calculated with reference to the peak of baicalin.

Reference solution Dissolve a quantity of baicalin CRS, weighed accurately, in 50% methanol to produce a solution containing 50 μg per ml as the reference solution.

Test solution Mix the contents obtained in the test of weight variation, weigh accurately 10 mg, add a quantity of 50% methanol, ultrasonicate for 20 minutes to dissolve, to produce a solution containing about 0.2 mg per ml as the test solution.

Procedure Accurately inject 20 μl of each of the reference solution and the test solution, respectively, into the column, determine and calculate the content.
It contains not less than 128 mg and not more than 173 mg of baicalin ($C_{21}H_{18}O_{11}$) per vial, referred to Radix Scutellariae.

Fructus Forsythiae Carry out the method for high performance liquid chromatography (Appendix Ⅵ D).

Chromatographic system and system suitability Use octadecylsilane bonded silica gel as the stationary phase and a mixture of acetonitrile, water and glacial acetic acid (25 : 75 : 0.1) as the mobile phase. As detector a spectrophotometer set at 278 nm. The number of theoretical plates of the column is not less than 4000, calculated with the reference to the peak of forsythin.

Reference solution Dissolve a quantities of forsythin CRS, weighed accurately, in methanol to prepare a solution containing 20 μg per ml.

Test solution Mix well the contents obtained in the test of weight variation, weigh accurately 0.1 g, dissolve with 5 ml of 65% solution of ethanol in several times, apply to a column 1 cm in diameter, packed with neutral aluminium oxide (100-120 mesh, 5 g), elute with 65% ethanol, collect the eluate in a 25 ml volumetric flask, dilute with 65% ethanol to volume and mix well.

Procedure Inject accurately 10 μl of each of the reference solution and the test solution into the column, determine and calculate the content.
It contains not less than 1.4 mg and not more than 2.1 mg of forsythin ($C_{29}H_{36}O_{15}$) per vial, referred to Fructus Forsythiae.

Action To clear *heat* to relieve *toxicity*, and disperse *wind* to release the exterior.

Indications Fever, coughing and sore throat due to affliction from external *wind-heat*; upper respiratory tract infection, mild pneumonia or tonsillitis with above symptoms.

Usage and Dosage Intervenous drop infusion. 60 mg per kg body weight each time, once a day; or under supervision of a physician. Dissolved by quantum sufficit of sterile water for injection, then diluted by 500 ml sodium chloride injection or glucose injection before use.

Precaution Cloudiness or sedimentation occurs when it is combined with aminoglycosides (gentamycin, kanamycin and streptomycin), and macrolides (erythromycin and albomycin). Do not use them together

Strength 600 mg per vial

Storage Preserve in tightly closed containers, protected from light, and stored in a cool place.

Zicao Gao (紫草膏)

Zicao Ointment

Ingredients Radix Arnebiae seu Lithospermi 500 g; Radix Angelicae Sinensis 150 g; Radix Saposhnikoviae 150 g; Radix Rehmanniae 150 g; Radix Angelicae Dahuricae 150 g; Olibanum 150 g; Myrrha 150 g.

Procedure Pulverize Olibanum and Myrrha to fine powders, and sift. Cut properly Radix Angelicae Sinensis, Radix Saposhnikoviae, Radix Rehmanniae, Radix Angelicae Dahuricae, then deep-fry with 6000 g of edible vegetable oil, and discard the residue. Soften Radix Arnebiae or Radix Lithospermi with water, deep-fry until the oil becomes purplish-red in colour, discard the residue, filter. Add a quantity of beeswax, to each 10 g of oil add 2-4 g of beeswax, melt, and stir well with the above powders while warm.

Description A purplish-red ointment, with a characteristic oily odour.

Other requirements Complies with the general requirements for ointments (Appendix Ⅰ R).

Action To remove slough to promote regeneration of tissues, and relieve *toxicity* to kill pain.

Indications Ulcer due to retained *heat* with manifestations of painful bright red wound in which pus and slough are almost exhausted.

Usage and dosage Spread on a piece of gauze for topical application. Change the dressing every 1-2 days.

Storage Preserve in tightly closed containers.

Zijin Ding (紫金锭)

Zijin Troches

Ingredients Pseudobulbus Cremastrae seu Pleiones 200 g; Radix Knoxiae 150 g; Semen Euphorbiae Pulveratum 100 g; Galla Chinensis 100 g; Moschus 30 g; Cinnabaris 40 g; Realgar 20 g.

Procedure Levigate Cinnabaris and Realgar to very fine powder, respectively. Pulverize Pseudobulbus Cremastrae seu Pleiones, Galla Chinensis and Radix Knoxiae to fine powders, grind Moschus to fine powder. Triturate the above powders with Semen Euphorbiae Pulveratum, sift, and mix thoroughly. Add water to 320 g of glutinous rice powder to prepare a mass, steam and mix thoroughly with the above powders. Compress to lozenges and dry at a lower temperature.

Description Dark brown to brown, rectangular or rod-

shaped masses; odour, characteristic; taste, pungent and bitter.

Identification (1) Microscopical: Needle crystals of calcium oxalate in bundles or scattered, up to about 128 μm long, about 2 μm in diameter. Pigment cells reddish-brown or yellowish-brown, elliptical, or elongated to tubular. Non-glandular hairs 1 to several celled, some with slightly twisted apex. Irregular masses pale yellowish-brown, with embeded small prisms. Irregular fine granules reddish-brown, lustrous, with dark black edge. Irregular fragments golden yellow or orange-yellow, lustrous.
(2) Place 0.5 g, in powder, in a test tube, add 1-2 ml of sodium hydroxide TS and a small quantity of zinc powder, cover the test tube with a piece of filter paper moistened with silver nitrate TS, heat the test tube on a water bath, the silver nitrate test paper changes from yellow to brown and finally to black.

Other requirements Comply with the general requirements for troches (Appendix Ⅰ E).

Action To remove pestilence and relieve *toxicity*, and reduce swelling and kill pain.

Indications Sunstroke, distending pain in the stomach and abdomen, nausea, vomiting, diarrhea or dysentery, child syncope due to *phlegm*; furuncles, mumps, erysipelas and throat illness.

Usage and dosage 0.6-1.5 g, twice a day. For external use, appropriate quantity to be mixed with vinegar and applied topically.

Precaution Contraindicated for pregnant women.

Strength (1) 0.3 g per troche (2) 3 g per troche

Storage Preserve in well closed containers.

Zixinyin Koufuye
(滋心阴口服液)

Zixinyin Mixture

Ingredients Radix Ophiopogonis; Radix paeoniae Rubra; Radix Glehniae; Radix et Rhizoma Notoginseng.

Procedure Decoct Radix Ophiopogonis and Radix Glehniae with water for 3 times, 2 hours for the first and second time and 1 hour for the third one, combine the decoction, filter, concentrate the filtrate to an appropriate quantity and adjust with ethanol to a content of 65% ethanol, stand and filter. Heat under reflux Radix et Rhizoma Notoginseng, pulverized to coarse powder, with 75% ethanol for 3 times, 2 hours for each, combine the extract, filter and recover ethanol; decoct the drug residue with water for 3 times, 2 hours for the first and second time and 1 hour for the third one, combine the decoction, concentrate to an appropriate quantity, adjust with ethanol to a content of 65% ethanol, stand and filter. Combine the filtrate and the filtrate of Radix Ophiopogonis and Radix Glehniae, recover ethanol. Decoct Radix Paeoniae Rubra with water for 3 times, 2 hours for the first and second time, 1 hour for the third one. Combine the decoction, filter, concentrate the filtrate to a quantity of amount, adjust to pH 8 with 1% solution of sodium hydroxide, add a quantity of 2% solution of gelatin and precipitate completely, and filter. Concentrate the filtrate to a quantity of amount, adjust with ethanol to a content of 65% ethanol, stand, filter and adjust the filtrate to a content of 85% ethanol, stand, filter, recover ethanol and concentrate to a quantity of amount. Combine the above extracts, stand at a lower temperature for 24 hours, filter, add a quantity of excipient and pack.

Description A clear, reddish-brown liquid; odour, slightly aromatic; taste, sweet, and slightly bitter.

Identification Extract 5 ml of the mixture with three quantities, 20 ml, 10 ml and 10 ml, of *n*-butanol saturated with water. Combine the extracts, and wash with two 10-ml quantities of water saturated with *n*-butanol, discard the washings, recover *n*-butanol to dryness, dissolve the residue in 10 ml of ethanol as the test solution. Dissolve notoginsenoside R_1 CRS in methanol to produce a solution containing 1 mg per ml as the reference solution. Carry out the method for thin layer chromatography (Appendix Ⅵ B), using silica gel G as the coating substances and the lower layer of a mixture of chloroform, methanol and water (13 : 7 : 2) allow to stand at 5-10℃ for 12 hours as the mobile phase. Apply separately 5 μl of each of the above two solutions to the plate. After developing and removal of the plate, dry in air. Spray with 10% solution of sulfuric acid in ethanol, heat at 105℃ to the spots clear. The spot in the chromatogram obtained with the test solution corresponds in position and colour to the spot in the chromatogram obtained with the reference solution.

Relative density Not less than 1.06 (Appendix Ⅶ A).

pH value 5.0-7.0 (Appendix Ⅶ G).

Other requirements Comply with the general requirements for mixtures (Appendix Ⅰ J).

Assay Carry out the method for high performance liquid chromatography (Appendix Ⅵ D).

Chromatographic system and system suitability Use octadecylsilane bounded silica gel as the stationary phase and a mixture of methanol, water and glacial acetic acid (25 : 75 : 0.2) as the mobile phase. As detector a spectrophotometer set at 235 nm. The number of theoretical plates of the column is not less than 3600, calculated with reference to the peak of paeoniflorin.

Reference solution Dissolve a quantity of paeoniflorin CRS, accurately weighed, with 50% methanol to prepare a solution containing 20 μg per ml.

Test solution Measure accurately 10 ml of the mixture, in a 25 ml volumetric flask, dilute with methanol to volume and mix well. Stand over 1 hour, and filter the supernatant. Measure accurately 2 ml of the successive filtrate, apply to a column of neutral aluminum oxide (100-200 mesh, 2 g, pre-washed with 10 ml of water), elute with 25 ml of water. Collect the eluate in a 25 ml volumetric flask, dilute with water to volume and mix well.

Procedure Inject accurately 20 μl of the test solution and 10 μl of the reference solution into the column and determine. It contains not less than 0.4 mg of paeoniflorin ($C_{23}H_{28}O_{11}$) per ml, referred to Radix Paeoniae Rubra.

Action To nourish *heart-yin* and promote blood circulation to kill pain.

Indications Obstruction of *lung-qi* in the chest due to a *deficiency* of *yin* and blood stagnation, with manifestations of constriction and pain in the chest, palpitation or severe palpitation, a hot sensation in the palms, soles and chest, disturbed sleeping at night and reddened tongue with scanty coating; angina pectoris in coronary heart disease with above symptoms.

Usage and dosage 10 ml, 3 times a day.

Strength 10 ml per phial

Storage Preserve in tightly closed containers.

Zixue
(紫雪)

Zixue Powder

Ingredients Gypsum Fibrosum 144 g; Gypsum Rubrum seu Calcitum 144 g; Talcum 144 g; Magnetitum 144 g; Radix Scrophulariae 48 g; Radix Aucklandiae 15 g; Lignum Aquilariae Resinatum 15 g; Rhizoma Cimicifugae 48 g; Radix et Rhizoma Glycyrrhizae 24 g; Flos Caryophylli 3 g; Natrii Sulfas (processed) 480 g; Saltpetre (refined) 96 g; Pulvis Cornus Bubali Concentratus 9 g; Cornu Saigae Tataricae 4.5 g; Moschus 3.6 g; Cinnabaris 9 g.

Procedure Break Gypsum Fibrosum, Gypsum Rubrum seu Calcitum, Talcum, and Magnetitum to small pieces and decoct with water for 3 times. Decoct Radix Scrophulariae, Radix Aucklandiae, Lignum Aquilariae Resinatum, Rhizoma Cimicifugae, Radix et Rhizoma Glycyrrhizae, and Flos Caryophylli with the above decoction for 3 times. Combine the decoctions, filter, concentrate the filtrate to a thick extract. Pulverize Natrii Sulfas and Saltpetre and add to the thick extract, stir well. Dry and pulverize the mixture to fine powder. File Cornu Saigae Tataricae to fine powder. Levigate Cinnabaris to very fine powder. Grind Pulvis Cornus Bubali Concentratus and Moschus to fine powders, triturate with the above powders, sift and mix thoroughly.

Description A brownish-red to greyish-brown powder; odour, aromatic; taste, salty and slightly bitter.

Identification (1) To a small quantity of the powder add a quantity of water, shake, and filter. Mix 2 ml of the filtrate with an equal volume of sulfuric acid, cool, add a freshly prepared ferrous sulphate TS to form two liquid layers; a brown colour is produced at the conjunction of the two liquids. To another 2 ml of the filtrate, add several drops of barium chloride TS; a white precipitate is produced, which is not dissolved in hydrochloric acid and nitric acid. Moisten a platinum wire with hydrochloric acid, dip it into the filtrate, then burn in a colourless flame; a bright yellow colour is produced.

(2) Extract 5 g of the powder in a Sohxlet's extractor with 40 ml of ether, heat under reflux for about 1 hour. Expel the ether, dissolve the residue in 2 ml of cyclohexane as the test solution. Dissolve muscone CRS in cyclohexane to produce a solution containing 0.02 mg per ml as the reference solution. Carry out the method for gas chromatography (Appendix Ⅵ E), using a 2 m long column packed with 1% polyethylene glycol glutarate as the stationary phase; maintain the column temperature at 140℃. Inject 2-5 μl of each of the test solution and the reference solution, respectively, into the column. The retention time of the peak obtained with the test solution and the reference solution corresponds with each other.

Other requirements Comply with the general requirements for powders (Appendix Ⅰ B).

Action To clear *heat* to resuscitate, and relieve convulsion and anchor the mind.

Indications Invasion of the pericardium by *heat* and stirring of *liver-wind* by intense *heat* with manifestations of high fever, restlessness, coma, delirium, convulsive seizures, skin eruptions, hematemesis, deep-coloured urine and constipation.

Usage and dosage 1.5-3 g, twice a day; 0.3 g for children of 1 year old, and add 0.3 g for each year up to 5 years of age, once a day; taken according to doctor's order for children over 5 years old.

Precaution Contraindicated for pregnant women.

Strength 1.5 g per bottle

Storage Preserve in tightly closed containers.

Zuojin Jiaonang
(左金胶囊)

Zuojin Capsules

Ingredients Rhizoma Coptidis 1284 g; Fructus Evodiae 214 g.

Procedure pulverize 71 g of Fructus Evodiae into fine powder, heat under reflux three times, the other Fructus Evodiae and Rhizoma Coptidis with 60% ethanol for three times, 3 hours for the first time, 2 hours for the second time and 1.5 hours for the third time, combine the extracts and filter, recover ethanol and concentrate to a thick extract. Add the fine powder of Fructus Evodiae. Mix thoroughly, dry, and pulverize. Add a quantity of starch, mix thoroughly, make granules, and make to 1000 capsules.

Description Capsules containing redish-brown to brown powder and granules; odour, characteristic; taste, slightly bitter.

Identification (1) To 1 g of capsule content, add 20 ml of ethanol, ultrasonicate for 20 minutes, filter, and use the filtrate as the test solution. Prepare a solution of 0.2 g of Fructus Evodiae reference drug in the same manner as the reference drug solution. Dissolve rutaecarpine CRS in ethanol to produce a solution containing 0.2 mg per ml as the reference solution. Carry out the method for thin layer chromatography (Appendix Ⅵ B), using silica gel G as the coating substance and a mixture of cyclohexane, ethyl acetate, and methanol (19 : 5 : 1) as the mobile phase. Apply separately 1 μl of each of the above three solutions to the plate to the plate. After developing and removal of the plate, dry in air. Spray with 10% sulfuric acid in ethanol, and heat at 105℃ for 5 minutes. Examine under ultraviolet light at 365 nm. The fluorescent spots in the chromatogram obtained with the test solution correspond in position and colour to the spots in the chromatogram obtained with the reference drug solution and the reference solution.

(2) Dilute the test solution obtained under Identification (1) 10 times as the test solution. To 0.1 g of Rhizoma Coptidis reference drug, add 20 ml of ethanol, ultrasonicate for 20 minutes, filter, and use the filtrate as the reference drug solution. Dissolve berberine hydrochloride CRS in methanol to produce a solution containing 0.5 mg per ml as the reference solution. Carry out the method for thin layer chromatography (Appendix Ⅵ B), using silica gel G as the coating substance and a mixture of benzene, ethyl acetate, methanol, isopropanol, and concentrated ammonia TS (12 : 6 : 3 : 3 : 1) as the mobile phase. Apply separately to the plate 1 μl of each of the above three solutions. After developing in a chamber pre-equilibrated with ammonia vapour and removal of the plate, dry in air. Examine under ultraviolet light at 365 nm. The fluorescent spots in the chromatogram obtained with the test solution correspond in position and colour to the spots in the chromatogram obtained with the reference drug solution and the reference solution.

Other requirements Comply with the general requirements for capsules (Appendix Ⅰ L).

Assay Carry out the method for high performance liquid chromatography (Appendix Ⅵ D).

Chromatographic system and system suitability Use octadecylsilane bonded silica gel as the stationary phase, and

a mixture of acetonitrile and 0.05 mol/L solution of potassium dihydrogen phosphate pH3.0, adjusted by phosphoric acid (25 : 75) as the mobile phase. As detector a spectrophotometer set at 350 nm. The number of theoretical plates of the column is not less than 3000, calculated with the reference to the peak of berberine hydrochloride.

Reference solution Weigh accurately a quantity of berberine hydrochloride CRS, dissolve with a mixture solution of hydrochloric acid and methanol (1 : 100), and mix well, to produce a solution containing 30 μg per ml.

Test solution Weigh accurately 0.1 g of capsule content, obtained under the test of weight variation and pulverized to fine powder, in a 100 ml volumetric flask, add a quantity of a mixture solution of hydrochloric acid and methanol (1 : 100), ultrasonicate (power 300 W, frequency 50 kHz) for 20 minutes, cool, dilute with the mixture solution of hydrochloric acid and methanol (1 : 100) to volume, mix well, and filter. Discard the initial filtrate and measure accurately 2 ml of the successive filtrate, in a 10 ml volumetric flask, and dilute with the mixture solution of hydrochloric acid and methanol (1 : 100) to volume, stir well, and centrifuge (12000 rpm) for 10 min. Use the supernatant of the successive filtrate as the test solution.

Procedure Inject accurately 10 μl of each of the reference solution and the test solution into the column respectively and measure.

It contains not less than 40 mg of berberine hydrochloride ($C_{20}H_{18}ClNO_4$) per capsule, referred to Rhizoma Coptidis.

Action To purge *fire*, soothe the liver, and harmonize the stomach to kill pain.

Indications Gastric and hypochondriac pain, bitter taste in the mouth, gastric discomfort with acid regurgitation and dislike of hot drinks due to invasion of the stomach by *liver-fire*.

Usage and dosage 2-4 capsules, twice a day; taken after meals. 15 days making a course of treatment.

Strength 0.35 g per capsule

Storage Preserve in tightly closed containers.

Zuojin Wan
(左金丸)

Zuojin Pills

Ingredients Rhizoma Coptidis 600 g; Fructus Evodiae 100 g.

Procedure Pulverize the above two ingredients to fine powder, sift and mix well. Make pills with water and dry.

Description Yellowish-brown watered pills; odour, characteristic; taste, bitter and pungent.

Identification (1) Microscopical: Fibre bundles bright yellow, with slightly thickened walls and distinct pits. Nonglandular hairs 2-6 celled, some lumina filled with reddish-brown contents; glandular hairs with a multicellular, elliptical head, containing brownish-yellow to brownish-red contents, and with a 2-5-celled stalk.

(2) Grind 1 g to fine powder, ultrasonicate with 10 ml of ethanol for 20 minutes, cool, filter and use the filtrate as the test solution. Prepare a solutions with 0.6 g of Rhizoma Coptidis reference drug as the reference drug solution in the same manner. Dissolve berberine hydrochloride CRS in ethanol to produce a solution containing 0.5 mg per ml as the reference solution. Carry out the method for thin layer chromatography (Appendix VI B), using silica gel G as the coating substance and a mixture of benzene, ethyl acetate, methanol, isopropanol and concentrated ammonia TS (12 : 6 : 3 : 3 : 1) as the mobile phase. Apply separately to the plate 2 μl of each of the three solutions. After developing in a chamber pre-saturated with ammonia vapour and removal of the plate, dry in air, and examine under ultraviolet light at 365 nm. The fluorescent spots in the chromatogram obtained with the test solution correspond in position and colour to the spots in the chromatogram obtained with the reference drug solution and the reference solution.

(3) To 0.2 g of Fructus Evodiae reference drug, add 10 ml of ethanol, ultrasonicate for 20 minutes, filter, and use the filtrate as the reference drug solution. Dissolve rutaecarpine CRS in ethanol to produce a solution containing 0.2 mg per ml as the reference solution. Carry out the method for thin layer chromatography (Appendix VI B), using silica gel G as the coating substance and a mixture of cyclohexane, ethyl acetate and methanol (19 : 5 : 1) as the mobile phase. Apply separately 5 μl of the test solution obtained under Identification test (2) and 1 μl of each of the above two solutions to the plate. After developing and removal of the plate, dry in air, spray with 10% sulfuric acid in ethanol, heat at 105℃ for 5 minutes, and examine under ultraviolet light at 365 nm. The fluorescent spots in chromatogram obtained with the test solution correspond in position and colour to the spots in the chromatograms obtained with the reference drug solution and the reference solution.

Other requirements Comply with the general requirements for pills (Appendix I A).

Assay Carry out the method for high performance liquid chromatography (Appendix VI D).

Chromatographic system and system suitability Use octadecyasilane bonded silica gel as the stationary phase and a mixture of acetonitrile and 0.05 mol/L potassium dihydrogen phosphate (pH3.0, adjusted by phosphoric acid) (25 : 75) as the mobile phase. As detector a spectrophotometer set at 350 nm. The number of theoretical plates of the column is not less than 3000, calculated with the reference to the peak of berberine hydrochloride.

Reference solution Dissolve a quantity of berberine hydrochloride CRS, accurately weighed, in a mixture of hydrochloric acid and methanol (1 : 100) to prepare a solution containing 50 μg per ml as the reference solution.

Test solution Weigh accurately 1.0 g, in fine powder, in a stopper conical flask, add accurately 100 ml of a mixture of hydrochloric acid and methanol (1 : 100), and weigh. Macerate for 1 hour and then heat under reflux for 1 hour, cool, weigh again, replenish the loss of weight with the mixture of hydrochloric acid and methanol (1 : 100), and shake well. Filter and use the successive filtrate as the test solution.

Procedure Inject accurately 10 μl of each of the reference solution and the test solution into the column, respectively, and calculate the content.

It contains not less than 31 mg of berberine hydrochloride ($C_{20}H_{18}ClNO_4$) per gram, referred to Rhizoma Coptidis.

Action To purge *fire*, soothe the liver, and harmonize the stomach to kill pain.

Indications Gastric and hypochondriac pain, bitter taste in the mouth, gastric discomfort with acid regurgitation and dislike of hot drinks due to invasion of the stomach by *liver-fire*.

Usage and dosage 3-6 g, twice a day.

Storage Preserve in tightly closed containers, protected from moisture.

APPENDICES

Contents of the Appendices

Appendix Ⅰ

General Requirements for Preparations …… A-5
Ⅰ A Pills …… A-5
Ⅰ B Powders …… A-6
Ⅰ C Granules …… A-7
Ⅰ D Tablets …… A-7
Ⅰ E Troches …… A-8
Ⅰ F Concentrated Decoctions …… A-8
Ⅰ G Glues …… A-9
Ⅰ H Syrups …… A-9
Ⅰ I Cataplasms …… A-10
Ⅰ J Mixtures …… A-11
Ⅰ K Dripping Pills …… A-11
Ⅰ L Capsules …… A-11
Ⅰ M Medicinal Wines …… A-12
Ⅰ N Tinctures …… A-12
Ⅰ O Liquid Extracts and Extracts …… A-13
Ⅰ P Plasters …… A-13
Ⅰ Q Gels …… A-14
Ⅰ R Ointments …… A-14
Ⅰ S Medicinal Distillates …… A-14
Ⅰ T Medicinal Teas …… A-15
Ⅰ U Injections …… A-16
Ⅰ V Liniments, Lotions, Smeared films …… A-17
Ⅰ W Suppositories …… A-17
Ⅰ X Nasal Preparations …… A-18
Ⅰ Y Ophthalmic Preparations …… A-18
Ⅰ Z Aerosols and Sprays …… A-19

Appendix Ⅱ

Ⅱ A Sampling of Crude Drugs …… A-21
Ⅱ B General Quality Control Method for Crude Drugs …… A-21
Ⅱ C Microscopical Identification …… A-22
Ⅱ D The Processing of Crude Drugs …… A-24

Appendix Ⅲ

Ingredients of Patent Medicines not Included in the Pharmacopoeia …… A-26

Appendix Ⅳ

General Identification Tests …… A-30

Appendix Ⅴ

Spectrophotometry …… A-33
Ⅴ A Ultraviolet Spectrophotometry and Colourimetry …… A-33
Ⅴ C Infrared Spectrophotometry …… A-34
Ⅴ D Atomic Absorption Spectrophotometry …… A-35

Appendix Ⅵ

Chromatography …… A-37
Ⅵ A Paper Chromatography …… A-37
Ⅵ B Thin-Layer Chromatography …… A-38
Ⅵ C Column Chromatography …… A-40
Ⅵ D High Performance Liquid Chromatography …… A-40
Ⅵ E Gas Chromatography …… A-43
Ⅵ F Capillary Electrophoresis …… A-44

Appendix Ⅶ

Ⅶ A Determination of Relative Density …… A-47
Ⅶ B Determination of Distilling Range …… A-48
Ⅶ C Determination of Melting Point …… A-48
Ⅶ D Determination of Congealing Point …… A-49
Ⅶ E Determination of Optical Rotation …… A-50
Ⅶ F Determination of Refractive Index …… A-50
Ⅶ G Determination of pH Value …… A-50

Appendix Ⅷ

Ⅷ A Potentiometric Titration and Dead-stop Titration …… A-52
Ⅷ B Non-aqueous Titration …… A-53

Appendix Ⅸ

Ⅸ A Determination of Foreign Matter …… A-54
Ⅸ B Determination of Lead (Pb), Cadmium (Cd), Arsenic (As), Mercury (Hg) and Copper (Cu) …… A-54
Ⅸ C Limit Test for Chlorides …… A-56
Ⅸ D Limit Test for Iron …… A-57
Ⅸ E Limit Test for Heavy Metals …… A-57
Ⅸ F Limit Test for Arsenic …… A-58
Ⅸ G Determination of Loss on Drying …… A-59
Ⅸ H Determination of Water …… A-59
Ⅸ J Determination of Residue on Ignition …… A-60
Ⅸ K Determination of Ash …… A-60
Ⅸ L Determination of Nitrogen …… A-61
Ⅸ M Determination of Ethanol …… A-62
Ⅸ N Tests of Fats and Fatty Oils …… A-62
Ⅸ O Determination of Swelling Capacity …… A-64
Ⅸ P Limit Tests of Rancidity …… A-64
Ⅸ Q Determination of Pesticides Residue …… A-64
Ⅸ R Test for Particulate Matter in Injections …… A-66
Ⅸ S Determination of Materials in Injection …… A-68
Ⅸ T Determination of Methanol …… A-69

Appendix Ⅹ

Ⅹ A Determination of Extractives …… A-70
Ⅹ B Determination of Tanninoids …… A-70
Ⅹ C Determination of Cineol …… A-70
Ⅹ D Determination of Volatile Oil …… A-71

Appendix Ⅺ

Ⅺ A Colour of Solution …… A-72
Ⅺ B Determination of Particle Size …… A-74
Ⅺ C Test for Visible Particles …… A-74
Ⅺ D Inductively-Coupled Plasma Mass Spectrometry …… A-76

Appendix Ⅻ

Ⅻ A Determination of Disintegration …… A-78
Ⅻ B Disintegration Test for Suppositories and Vaginal Tablets …… A-79
Ⅻ C Minimum Fill …… A-80
Ⅻ D Determination of Plaster Softening Point … A-80
Ⅻ E Determination of Cataplasms Adhesion …… A-81

Appendix ⅩⅢ

ⅩⅢ A Test for Pyrogens …… A-83
ⅩⅢ B Test for Sterility …… A-83
ⅩⅢ C Microbial Limit Tests …… A-87
ⅩⅢ D Test for Bacterial Endotoxin …… A-95

Appendix ⅩⅣ

Water for Pharmaceutical Purposes …… A-99

Appendix XV

XV A Reagents ····· A-100
XV B Test Solutions ····· A-113
XV C Test Papers ····· A-117
XV D Buffer Solutions ····· A-118
XV E Indicator Solutions ····· A-118
XV F Volumetric Solutions ····· A-119
XV G Chemical Reference Substances, Reference Drugs and Reference Extractives ····· A-123

Appendix XVI

Sterilisation ····· A-127

Appendix XVII

Names, Symbols and Atomic Weights of Elements ····· A-130

Appendix XVIII

XVIII A Guidelines for Validation of Analytical Method Adopted in Traditional Chinese Medicine Quality Specification ····· A-131
XVIII B Guidelines for Application of Safety Tests for Injection of Traditional Chinese Medicine ····· A-133

Appendix Ⅰ General Requirements for Preparations

Ⅰ A Pills

Pills are spherical or spherical-like solid dosage forms made of finely powdered crude drugs or crude drug extracts, proper binders or other excipients. They are classified into honeyed pills, water-honeyed pills, watered pills, pasted pills, concentrated pills waxed pills and concentrated pills etc.

Honeyed pills are made of fine powder of crude drugs, using honey as binder. Among them, pills weighing more than 0.5 g (including 0.5 g) per pill are big honeyed pills, pills weighing less than 0.5 g per pill are small honeyed pills.

Water-honeyed pills are made of fine powder of crude drugs, using honey and water as binders.

Watered pills are made of fine powder of crude drugs, using water (or yellow rice wine, vinegar, dilute medicinal juice, dilute syrup) as binder.

Pasted pills are made of fine powder of crude drugs, using rice powder rice-paste or flour-paste as binder.

Waxed pills are made of fine powder of crude drugs, using beeswax as binder.

Concentrated pills are made of condensed extract of crude drugs or partial crude drugs, mixing with appropriate excipient or fine powder of other crude drugs, using water, honey or honey and water as binders. They may be classified into concentrated watered pills, concentrated honeyed pills and concentrated water-honeyed pills based upon the different binders used in the production.

The production and storage of pills should comply with the following requirements.

1. The powdered drugs for preparing pills are fine or very fine powders, unless specified otherwise.

2. The honey used for honeyed pills production should be processed before using. According to the degree of processing, it can be divided into primary processed honey, secondary processed and tertiary processed honey, which may be selected and used to prepare honeyed pills, depending on the climate and the varieties of honeyed pills. In preparing big and small honeyed pills by rubbing method, the processed honey should be added to the drug powder while hot and mixed well, unless specified otherwise. If resin, gum and volatile drugs are contained in the formulation, the processed honey should be added at about 60℃; in preparing water-honeyed pills by water spray rotating method, the processed honey should be diluted with boiling water before using.

3. The extract for preparing concentrated pills should be made by extracting and concentrating according to the certain methods specified under the monograph.

4. Unless specified otherwise, water-honeyed pills, watered pills or concentrated water-honeyed pills, concentrated watered pills should be dried at a temperature below 80℃; pills containing large amount of volatile constituents or starch (including pasted pills) should be dried at a temperature below 60℃. Thermolabile pills should be dried with other proper methods.

5. Beewax used for producing waxed pills complies with the requirements specified under individual monograph in this pharmacopoeia. In preparing melt beewax by heating, then allow to cool to 60℃ and add drug powders proportionally, mix thoroughly and prepare the waxed pills using the kneading method while the temperature is maintained.

6. For pills need to be coated and polished, coat with the coating materials and polish as specified under individual monograph.

7. Pills should be round, integrate and uniform in appearance and colour. Big and small honeyed pills should appear fine, smooth and oily-moistened, with proper hardness. Waxed pills should be smooth in apperance without crack, and no drops or granules found inside the pills the pills.

8. Unless specified otherwise, Pills should be preserved in tightly closed containers and waxed pills, in tightly closed containers and stored in a dry place.

Following relevant tests should be carried out for pills.

Determination of water Carry out the method for the determination of water in general (Appendix Ⅸ H). Unless specified otherwise, big honeyed pills, small honeyed pills and concentrated honeyed pills contain not more than 15.0% of water, water-honeyed pills, concentrated water-honeyed pills not more than 12.0 per cent, watered pills, pasted pills and concentrated watered pills not more than 9.0 per cent. No determination of water is required for waxed pills.

Weight variation Unless specified otherwise Pills to be taken in pill are examined by Method 1 and pills to be taken by weight examined by Method 2.

Method 1 Take the largest number of pills in single dosage as one part (1 pill as one part for pills weighing 1.5 g or more than 1.5 g per pill; 10 pills as one part for pills weighing more than 0.015 g per pill and with the largest number of pills in single dosage is above 10, or pills weighing 0.015 g or less than 0.015 g per pill and with the largest number of pills in single dosage is not up to 10). Weigh separately 10 parts and compare with the labelled total weight (labelled weight of each pill × the number of pills weighed) or labelled single weight (if no labelled weight is stated, compare the weight of each pill with the average weight calculated) According to the requirements stated in Table 1. Not more than 2 parts exceed the limit of weight variation and none doubles the limit of weight variation.

Table 1

Labelled total or single weight (average weight)	Weight variation limit
0.05 g or less	±12%
more than 0.05 g to 0.1 g	±11%
more than 0.1 g to 0.3 g	±10%

continue

Labelled total or single weight (average weight)	Weight variation limit
more than 0. 3 g to 1. 5 g	± 9%
more than 1. 5 g to 3 g	± 8%
more than 3 g to 6 g	± 7%
more than 6 g to 9 g	± 6%
more than 9 g	± 5%

Method 2 Take 10 pills as one part, weigh separately 10 parts, compare with the labelled weight of each part (if no labelled weight is stated, compart the weight of each pill with the average weight calculated). According to the requirements stated in Table 2. Not more than 2 parts exceed the weight variation limit and none doubles the limit.

Table 2

Labelled or Average weight of each part	Weight variation limit
0. 05 g or less	±12%
more than 0. 05 g to 0. 1 g	±11%
more than 0. 1 g to 0. 3 g	±10%
more than 0. 3 g to 1 g	± 8%
more than 1 g to 2 g	± 7%
more than 2 g	± 6%

Weight variation of sugar-coated pills should be examined before coating, pills are not to be coated until the weight variation of the pill cores complies with the requirements. The weight variation of pills is no longer examined after sugar-coating, other coated pills should be examined the weight variation after coating and comply with the requirements; The weight variation is no longer examined for the single dose packed pills, which have been examined according to the filling variation standards.

Filling variation The Filling variation of pills presented in single dose pack should comply with the following requirements.

Table 3

Labelled weight of each pack	Weight variation limit
0. 5 g or less	±12%
more than 0. 5 g to 1 g	±11%
more than 1 g to 2 g	±10%
more than 2 g to 3 g	± 8%
more than 3 g to 6 g	± 6%
more than 6 g to 9 g	± 5%
more than 9 g	± 4%

Procedure Take ten packs (or vials) of pills and weigh separately the content of each pack (or vial), compare with the labelled weight. According to the requirement stated in Table 3. Not more than 2 packs exceed the weight variation limit and none doubles the limit.

Filling The Filling variation of multiple doses packed pills of which filling is labelled in weight should comply with the test for Minimum Fill (Appendix XII C).

Disintegration test Unless specified other wise, Take 6 pills, select a basket with proper porosity of sieve (for pills with the diameter of less than 2. 5 mm, 2. 5-3. 5 mm or more than 3. 5 mm, using sieves with pores of 0. 42 mm, 1. 0 mm or 2. 0 mm in diameter respectively). Carry out the test as described under the disintegration test (Appendix XII A) for tablets, using disk. Unless specified otherwise, Small honeyed pills, water-honeyed pills and watered pills should be completely disintegrated within 1 hour, concentrated pills and pasted pills within 2 hours. During procedure, If pills adhere to the disk, thus hindering the determination, take another 6 pills and carry out the determination as described under the disintegration of tablets without disk, pills should be completely disintegrated within the specified time.
In the determination mentioned above, all the pills should pass through the sieve within the specified time. If there are minute granulated masses which cannot pass the sieve but soften without hard core, should be considered to comply with the requirements.
Waxed pills should comply with the requirements stated in monograph for Determination of Disintegration (Appendix XII A) for enteric-coated tablets.
No disintegration test is required for big honeyed pills.

Microbial limit test Comply with the requirements stated under Microbial Limit Test (Appendix XIII C).

I B Powders

Powders may be defined as mixtures of pulverized crude drugs or extract of crude drugs which are used for oral administration or external application.
The production and storage of powders should comply with the following requirements.

1. The crude drugs or extract of crude drugs for powders production should be comminuted. Unless specified otherwise, Powders of fine grade are employed for oral administration, and powders of very fine grade, for paediatrics and external application.

2. Powders should be dry, loose, well mixed and uniform in appearance and colour. When preparing powders containing poisonous, or precious drugs, they should be prepared by a compounding and grinding method of isochoric increase by degrees, mixed well and sieved.

3. Tools for separating dosage should be enclosed in powders presented in multiple doses pack; Powders for oral administration containing poisonous drugs should be packed in single dose.

4. Unless specified otherwise, Powders should be stored in well closed containers. Powders containing volatile or moisture-absorbing drugs should be stored in tightly closed containers.
Follwing relevant tests should be carried out for powders.

Particle size Powders used for burn or severe trauma should comply with the following test.

Procedure Carry out the method for the determination of particle size in general (Appendix XI B, method 2, single particle size-sieve method), unless specified otherwise, the weight of the powders passing through a sieve No. 6 should not be less than that of 95 per cent of the powders examined.

Uniformity in appearance Spread evenly a sufficient quantity of powders in an area of about 5 cm^2 on a piece of smooth paper, press the surface to be even, observe the powder under a bright light. It should be uniform in colouration without discolourations and stains.

Determination of water Carry out the method for the determination of water in general (Appendix IX H). The powders contain not more than 9. 0 per cent of water, unless specified otherwise.

Filling variation Filling variation limit for powders presented in single dose should comply with the requirements stated in the table below.

Labelled weight per pack (or vial)	Weight variation limit
0.1 g to 0.1 g or less	±15%
more than 0.1 g to 0.5 g	±10%
more than 0.5 g to 1.5 g	± 8%
more than 1.5 g to 6 g	± 7%
more than 6 g	± 5%

Procedure Weigh accurately each of ten packs (or vials) of powders and compare the weight of the content of each with the labelled weight. According to the requirements stated in the table, not more than 2 packs should exceed the packing variation limit and none should double the packing variation limit.

Filling Filling variation for powders presented in multiple doses should comply with the test for Minimum Fill (Appendix XII C).

Sterility Powders used for burn or severe trauma should comply with the Test for Sterility (Appendix XIII B).

Microbial limit test Unless otherwise specified, Comply with the requirements stated under Microbial Limit Test (Appendix XIII C).

I C Granules

Granules are soluble, suspensible or effervescent preparations in granular form with certain particle size made from drug extracts or finely powdered drug and suitable excipients.
The production and storage of medicinal granules should comply with the following requirements.

1. Unless specified otherwise, the crude drugs should be processed by extraction, purification and concentration to form a thin extract with a required relative density as described under individual monograph, dried by the appropriate methods, and pulverized to fine powder particles, added with a quantity of excipients or finely powdered crude drugs, well mixed and granulate. Also, a quantity of excipients or finely powdered crude drugs may be added into the thin extracts, well mixed and granulated. The amount of excipients added should be controlled, which is not more than 2 times of that of the dried extracts, or not more than 5 times of that of the thin extracts in general.

2. The volatile oil should be sprayed evenly upon dried granules, stored in well closed containers for the required time, or be added after being wrapped in β-cyclodextrin, unless specified otherwise.

3. Correctives and flavoring agents may be added in preparation of granules; Granules may also be film-coated to prevent moisture absorption, or cover up unpleasant odour. If necessary, solvent residues should be examined for film-coated granules.

4. Medicinal granules should be dry, uniform in appearance and colour, without moisture absorption, agglomeration, deliquescence and so on.

5. Medicinal granules should be stored in tightly closed containers, and in a dry place to prevent moisture absorption, unless specified otherwise.
Following relevant tests should be carried out for granules.

Particle size Unless specified otherwise. Carry out the method for the Determination of Particle Size (Appendix XI B method 2, double particle size-sieve method), The total which cannot pass through sieve No. 1 and pass through sieve No. 5 are not more than 15 per cent of granules examined.

Determination of water Carry out the method for the determination of water (Appendix IX H). The medicinal granules contain not more than 6.0 per cent of water, unless specified otherwise.

Determination of dispersibility To 1 pack (10 g for granules in multiple doses pack) of medicinal granules, add 200 ml of hot water, stir for 5 minutes, observe immediately, granules should be completely dissolved or in suspension. Solube granules should be dissolved completely and slight turbidity is allowed; suspensible granules should be suspended uniformly.

effervescent granules To 1 pack of effervescent granules, put in the beaker filled with 200 ml of water at the temperature between 15℃ and 25℃. Granules should produce bubbles and be in effervescent state immediately, and be dispersed or dissolved in water completely in 5 minutes.
Examined by the methods above, granules should show no burned charrings etc.

Filling variation The Filling variation limit of single dose package of medicinal granules should comply with the following requirements.

Labelled weight per pack	Filling variation limit
1.0 g or less	±10%
more than 1 g to 1.5 g	± 8%
more than 1.5 g to 6 g	± 7%
more than 6 g	± 5%

Procedure Take 10 packs of medicinal granules, and weigh individual content of each pack. Compare the calculated weight of each pack with the labelled amount, according to the requirements stated in the table. Not more than 2 packs in filling variation exceed the filling variation limit and none doubles the limit.

Filling Granules presented in multiple doses should comply with the test for Minimum Fill (Appendix XII C).

Microbial limit test Comply with the requirements stated under Microbial Limit Tests (Appendix XIII C).

I D Tablets

Tablets are solid preparations of laminal or various shapes compressed to extracts of crude drugs, extracts of crude drugs with finely powdered crude drugs, or finely powdered crude drugs with suitable excipients, including extract tablets, semi-extract tablets and powdered crude drug tablets.
The production and storage of tablets should comply with the following requirements.
Tablets are mainly ordinary tablets for oral administration, there are other tablets such as buccal tablets, chewable tablets, effervescent tablets vaginal tablets, vaginal effervescent tablets, enteric coated-tablets and so on.
Buccal tablets are tablets staying in oral cavity, of which medicaments dissolve slowly and take effects.

Chewable tablets are tablets swallowing down after being chewed or sucked to dissolve in oral cavity.
Effervescent tablets are tablets containing sodium bicarbonate and organic acid, which can produce bubbles and be in effervescent state once meet with water.
Vaginal tablets and vaginal effervescent tablets are tablets for vaginal cavity use.
Enteric-coated tablets are tablets coated with enteric coating materials.

1. The medicinal powders (extracts) for tableting should be mixed with the excipients thoroughly. Tablets containing medicaments toxic in nature or those administered in small dosage should be dispersed uniformly in a way appropriate for the substance concerned.

2. Tablets containing volatile or thermolabile substances are processed in a way to avoid loss on heating.

3. The moisture content of the granules should be controlled under the processing requirement before tableting, thus to prevent mould contamination, deterioration during storage.

4. If necessary, additives such as correctauts, flavoring agents, colouring agents etc. May be added in the preparation of tablets.

5. In order to increase the stability, cover up the unpleasant odour and taste or improve the appearance etc., tablets may be coated with sugar or film. Tablets for oral administration are enteric coated so as to avoid the gastric fluid's destroy, the irritation to the gastric mucosa, thus to obtain a late release in the intestine. If necessary, solvent residues should be examined for film-coated tablets.

6. Tablets should have a clean, smooth and uniformly coloured surface; they are sufficiently hard to withstand handling without abrasion or cracking.

7. Unless otherwise specified, tablets should be preserved in tightly closed containers.
Following relevant tests should be carried out for tablets.

Weight variation Tablets should comply with the following requirements.

labelled or Average weight	Weight variation limit
Less than 0.3 g	± 7.5%
0.3 g or more	± 5%

Procedure Weigh accurately 20 tablets and calculate the average weight, then weigh individually each of the 20 tablets. Compare the weight of each tablet with the labelled tablet weight (if no labelled weight is stated, compare the weight of each tablet with the average weight calculated). According to the requirements stated in the table, not more than 2 of the individual weights exceed the weight variation limit and none doubles the limit.
Sugar coated tablets should be tested before sugar coating to show that the tablet cores comply with the requirements. Tablets need not be tested again after sugar coating, unless specified otherwise, other coated tablets should be tested after coating and comply with the requirements.

Disintegration Unless specified otherwise, Carry out the test as described under the disintegration test (Appendix XII A). All the tablets should comply with the specified requirements.
Vaginal tablets should comply with the requiremeats under Disintegration Test for Suppositories and Vaginal Tablets (Appendix XII B).
No disintegration test is required for buccal tablets and chewable tablets.

Foaming capacity Vaginal effervescent tablets should comply with the following test.

Assay Unless specified otherwise, take 10 25 ml-graduated test tubes with piston, add accurately 2 ml of water individually, put in the water bath with the temperature of 37℃±1℃ for 5 minutes. Put a piece of tablet in each tube, seal up with the piston. Observe the volume of the largest amount of foam. Average volume should not be less than 6 ml, the tablets less than 4 should not be more than 2.

Microbial limit test Comply with the requirements under Microbial Limit Tests (Appendix XIII C).

I E Troches

Troches are solid preparations of various shapes made from fine powders of crude drugs and suitable binders (or using the binding property of crude drugs themselves).
The production and storage of troches should comply with the following requirements.

1. The honey, powder of glutinous rice etc. used for troches should be treated by the specified methods.

2. Troches should be prepared with binders or the binding property of crude drugs themselves as described under individual monograph and formed by a moulding or a kneading method, then renovated and dried in the shade. Torches may also be prepared by water spray rotating method.

3. Troches may be coated or polished, if necessary, using the coating materials stated under the individual monograph of the preparation.

4. Troches should be neat, smooth, uniform in colour with no wrinkle, breach, gap, cavity and change in form.

5. Troches should be preserved in well closed containers and stored in a cool and dry place unless specified otherwise.
Following relevant tests should be carried out for troches.

Weight variation Unless specified otherwise, weight variation for troches complies with the test for Weight variation stated under Pills.

Microbial limit test Comply with the requirements stated under Microbial Limit Tests (Appendix XIII C).

I F Concentrated Decoctions

Concentrated decoctions are semifluid preparations prepared by decocting the crude drugs in water, concentrating the decoction and adding honey or sugar. (or invertsugar)
The production and storage of concentrated decoctions should comply with the following requirements.

1. The crude drugs should be decocted according to the appropriate methods for individual species and filtered. The thin extract is obtained by concentrating the filtrate to a specified relative density.

2. Unless specified otherwise, the fine powder of crude drugs should be added when the powder is needed as required.

3. The thin extract is concentrated by adding specified quantity of processed honey or sugar (or invert sugar). The fine powder of crude drugs should be added into a cold concentrated decoction, stirred and mixed well. The

quantity of honey or sugar (or invert sugar) added is generally not more than 3 times of that of the thin extract, unless specified otherwise.

4. Concentrated decoctions should have no burnt or other abnormal odour, and produce no sugar crystal out.

5. Concentrated decoctions should be preserved in tightly closed containers, stored in a cool place, unless specified otherwise.

Following relevent tests should be carried out for concentrated decoctions.

Relative density Unless specified otherwise, Weigh accurately a sufficient quantity of concentrated decoction being examined, dilute with double quantities of water, weigh accurately and mix well. Carry out the determination of relative density (Appendix Ⅶ A), calculate by the following formula. Should comply with the requirements under individual monograph.

$$\text{Relative density of concentrated decoction} = \frac{W_1 - W_1 \times f}{W_2 - W_2 \times f}$$

Where W_1 is the weight (g) of concentrated decoction in pycnometer;

W_2 is the weight (g) of water in pycnometer.

$$f = \frac{\text{weight of water added in concentrated decoction}}{\text{weight of concentrated decoction} + \text{weight of water added in concentrated decoction}}$$

It is not necessary to examine the relative density when the concentrated decoctions contain fine powder of crude drugs.

Insoluble materials To 5 g of the concentrated decoction add 200 ml of hot water, stir to dissolve, allow to stand for 3 minutes, and observe. No foreign matters such as scorched masses, etc. should be observed (a small amount of fine fibres and particles are not defined in this limit).

The concentrated decoction containing fine powder of crude drugs should be examined before the powder is added. The powder is added if it complies with the requirements. It is not necessary to examine the insoluble materials after the powder is added.

Filling Carry out the test for Minimum Fill (Appendix Ⅻ C), it should comply with the specified requirement.

Microbial limit test Comply with the requirements stated under Microbial Limit Tests (Appendix Ⅻ C).

Ⅰ G Glues

Glues are solid lump preparations intended for internal administration, prepared by decocting animal skin, bone, shell or born with water, concentrating into thick gelatinous mass and then drying.

The production and storage of glues should comply with the following requirements.

1. Soak and rinse the raw materials for the preparation of glues in water, remove foreign matters or non medicinal parts, cut into small lumps or saw into small pieces, then wash clean.

2. Decoct with water for several times until the decoction becomes light, combine the decoctions, allow to stand, filter and concentrate the filtrate. The concentrated gelatinous liquid should be able to coagulate under normal temperature.

3. Before the glues begin to coagulate, add a suitable amount of excipients (yellow rice wine, crystal sugar, edible vegetable oil, etc.), according to the requirements for processing specified in individual monograph.

4. After the glues coagulate, cut into lumps by weight as required and dry in the shade.

5. Glues should be translucent, uniform in appearance and colour, without abnormal odour.

6. In general, total ash, heavy metals, arsenic salts etc. should be determined.

7. Glues should be preserved in well closed containers and protected from moisture.

Following relevant tests should be carried out for glues.

Determination of water Put 1 g of gules into the flat weighing bottle, weigh accurately, add 2 ml of water, then heat it in the water bath to dissolve it, and then dry it. Make sure the thickness is not more than 2 mm. Carry out the method for the determination of water (Appendix Ⅸ H, method 1), the glues contain not more than 15.0 per cent of water.

Microbial limit test Comply with the requirements stated under Microbial Limit Test (Appendix Ⅻ C).

Ⅰ H Syrups

Syrups are concentrated aqueous solutions of sucrose containing extracts of crude drugs.

The production and storage of syrups should comply with the following requirements.

1. Syrups should contain not less than 45 per cent (g/ml) of sucrose.

2. The crude drugs should be extracted, purified and concentrated to a certain volume using the appropriate methods specified under the individual monograph, or drugs are dissolved with freshly boiled water, and then added with simple syrup.

If syrups are prepared with solid sucrose, water is added and boiled and filtered, a suitable amount of freshly boiled water may be added to the filtrate to comply with the labelled amount of drugs described in individual monograph, then mixed well.

3. Suitable additives may be added to syrups. If preservatives are needed, the amount of sorbic acid and benzoic acid should not be more than 0.3% (its potassium or sodium salt should be taken by the acid amount), or the amount of *p*-hydroxybenzoic acid esters, not more than 0.05%.

If other additives are added, the varieties and amount used should comply with the requirements involved in national standards and do not interfere with stability and testing of the preparation concerned. Suitable amount of ethanol, glycerin or other poly-alcohols may be added if necessary.

4. Syrups should be clean, unless specified otherwise. No mold contamination, rancid, gas or other deteriorations are allowed during storage. A small amount of dispersible precipitates are allowed.

5. In general, relative density, pH value etc. should be determined.

6. Syrups should be preserved in tightly closed containers. Stored in a cool place, unless specified otherwise.

Following relevant tests should be carried out for syrups.

Filling Syrups packed in a single dose should comply with the following test.

Procedure Take 5 bottles of syrup, pour the content separately to the calibrated dry graduated cylinders, remove as completely as possible examine at room temperature. Compare the filling volume of each pack with the labelled amount. Not more than 1 bottle in volume is less than the labelled amount, none is less than 95 per cent of the labelled amount.

Syrups packed in multiple doses comply with the requirements stated in Minimum Fill (Appendix XII C).

Microbial limit test Comply with the requirements stated under Microbial Limit Tests (Appendix XIII C).

I I Cataplasms

Cataplasms are sheet preparations made of extract of crude drugs, crude drugs or (and) chemical medicaments and appropriate bases, intended for application to skin, may produce local or general effects, including adhesive plasters, babu plasters and sticking plasters etc..

Adhesive plasters are cataplasms prepared by mixing the extract of crude drugs or (and) chemical medicaments with bases to the backing materials. The preparation methods of this agent consist of solvents method and hot-pressing method. The commonly used solvents consist of gasoline, *n*-hexane, and commonly used bases consist of rubber, hot-plastic rubber, rosin, rosin derivatives, vaselin, lanoline and zine oxide etc.. Other appropriate solvents and bases are applicable. Consist of ethylene/vinyl acetate copolymer, silicone rubber and polyethylene glycol etc.

Babu plasters are cataplasms prepared by well mixing the extract of crude drugs, crude drugs or (and) chemical medicaments with appropriate hydrophilic bases, then spreading to the backing materials. The commonly used bases consist of sodium carboxymethylcellcdose, gelatin, glyce-rine, microniting silica gel and so on.

Sticking plasters are lamelliform cataplasms made of extract of crude drags or (and) chemical medicaments, and appropriate macromolecular materials mainly composed of backing liner, drug-veserving liner, sticking liner and anti-sticking liner. The commonly used bases consist of ethylene/vinyl acetate copolymer, silicone rubber, and polyethylene glycol etc..

The commonly used backing materials for cataplasms consist of calico, non-weaving cloth, paper and so on; commonly used covering materials consist of anti-sticking paper, plastic film, aluminum foil, polyethylene compound film, hard gauze and so on.

Production and storage of cataplasms should comply with the following requirements.

1. The extracts of crude drugs are produced using the methods stated under individual monographs. Unless specified otherwise, solid medicament should be finely powdered previously or dissolved in a suitable solvent.

2. Transderme promoting agents, surfactants, stabiliyers, hygroscopic agents, preservatives, antioxidants may be added in cataplasms, if necessary.

3. The plasters of cataplasms should be spreaded uniformly, the surface should be smooth and clean, uniform in colour, not unglued and unviscous; Backing liner should be smooth and clean, no plaster leaked. When organic solvents are used in spreading, solvent residues should be examined if necessary.

4. The length and width of each piece of a cataplasm, measured by the mid-line, are not less than those labelled.

5. Unless specified otherwise, Cataplasms should be preserved in tightly closed containers.

Following relevant tests should be carried out for cataplasms.

Extractives in plaster mass Adhesive plasters are tested by method 1, babu plasters by method 2.

Method 1 Take 2 pieces of cataplasm (take 35 cm^2 for the cataplasms larger than 35 cm^2 in area), remove the covering liner, weigh accurately and put into a terrarium with cover, macerate in suitable quantity of organic solvent (chloroform, aether etc.) and shake over and again until cataplasm separates from the cloth. Take out the cloth and wash with above solvents until no cataplasm remains on it. Remove the solvent and dry the cloth at the temperature of 105℃ for 30 minutes, transfer the cloth to the desiccator. After cooling for 30 minutes, weigh accurately, the cloth. The difference between the weighings is the weight of cataplasm. Calculate the weight per 100 cm^2 of the cataplasm by the labelled area. The result should comply with the requirement specified in individual monograph.

Method 2 Take one piece of cataplasm, remove the covering liner, weigh accurately and put into a beaker, add suitable quantity of water and heat to boil until cataplasm separates from the liner cloth. Take out the cloth, Wash the cloth with water until no cataplasm remains on cloth. Allow to stand to dry, then put the cloth into an oven with a temperature of 105℃ for 30 minutes, transfer the cloth to a desiccator. After cooling for 30 minutes, weigh accurately the cloth. The difference between the weighings is the weight of cataplasm. Calculate the weight per 100 cm^2 of the cataplasm by the labelled area. The result should comply with the requirement specified in individual monograph.

Heat-resistance Adhesive plasters should be tested for heat-resistance.

Procedure Unless specified otherwise, take 2 pieces of cataplasm, remove the covering liner, heat at the temperature of 60℃ for 2 hours, after cooling, the back of cataplasm should be. no oily; the surface of the cataplasm should have patina and still be viscous when touch it with finger.

Excipient property Excipient property should be tested for babu plasters.

Assay Place one piece of cataplasm into the constant T & H chamber with a temperature of 37℃ and a relative humidity of 64% for 30 minutes, then take out the piece and fix it to a smooth steel plane using a clip, the steel plane is placed at an angle of 60° with the horizontal plane, allow to stand for 24 hours. No moving of the adhesive side occurs.

Adhesive property Unless specified otherwise, babu plasters should comply with the requirements stated under Determination of Cataplasms Adhesion (Appendix XII E, method 1), adhesive plasters should comply with the requirements stated under Determination of Cataplasms Adhesion (Appendix XII E, method 2), sticking plasters should comply with the requirements stated under Determination of Cataplasms Adhesion (Appendix XII E, method 2, 3).

Weight variation Cataplasms should be examined the weight variation and comply with the requirements.

Assay Unless specified otherwise, weigh accurately 20 pieces of cataplasm, and calculate the average weight, then weigh separately each piece of the cataplasm, compare with the average weight. Not more than 2 of the individual weights exceed ±5% of the average weight and none doubles

the limit.

Microbial limit test Unless specified otherwise, comply with the requirements stated under Microbial Limit Test (Appendix Ⅷ C).

Ⅰ J Mixtures

Mixtures are liquid preparations intended for oral administration, prepared by extracting the crude drugs with water or other solvents in suitable ways (package of a single dose is also known as "oral liquids").
The production and storage of mixtures should comply with the following requirements.

1. The drugs should be extracted, purified and concentrated to a certain volume by the methods as described under individual monograph. Unless specified otherwise The volatile ingredients in crude drugs should be extracted at first, then the remaining crude drugs decocted with the other drugs together.

2. Suitable additives may be added to mixtures. If preservatives are needed, the amount of sorbic acid and benzoic acid should not be more than 0.3% (its potassium or sodium salt should be taken by the acid amount), or the amount of p-hydroxybenzoic acid esters, not more than 0.05 per cent. If another additives are added, The variety and quantity to be used should comply with the requirements of the national standard, and not affect the stability and interfere with the tests for mixtures. If necessary, mixtures could also contain a proper quantity of alcohol.

3. If sucrose is used as an additive in mixtures, unless specified otherwise the content of it is not more than 20 per cent (g/g).

4. Unless specified otherwise, mixtures should be clear, show no evidence of mold contamination, rancidity, foreign matters, colour changing, gas or other deterioration during storage, but a small amount of dispelsible precipitates are allowed.

5. In general, relative density and pH value etc. should be determined.

6. Mixtures should be preserved in tightly closed containers and stored in a cool place, unless specified otherwise.
Following relevant test should be carried out for mixtures.

Filling variation For mixtures packed in a single dose should comply with the following test.

Assay Take 5 bottles of a mixture, pour the content separately to the calibrated dry graduated cylinders, examine at room temperature. Compare the filling volume of each pack with the labelled amount, not more than 1 bottle is less than the labelled amount, none is less than 95 per cent of the labelled amount.
Mixtures filled in multiple dose should comply with the requirements stated in Minimum Fill (Appendix Ⅻ C).

Microbial limit test Comply with the requirements stated under Microbial Limit Tests (Appendix Ⅷ C).

Ⅰ K Dripping Pills

Dripping pills are the preparations made by dripping a uniform, melted mixture of medicaments prepared by purify and concentrating extract of crude drugs and appropriate bases into an immiscible cooling liquid and congealing to a spherical or sphare-like.
The manufacture and storage of dripping pills should comply with the following requirements.

1. Water soluble or water-insoluble bases can be used to suit for different varieties of dripping pills. Commonly used bases consist of polyethylene glycols poloxamer, polyoxy [40] stearate, gelatin and stearic acid, glycerin monosterate, hydrogenated vegetable oils and so on.

2. The cooling liquid must be innocuous and should not interact with medicaments; liquid paraffin. vegetable oil, methylsilicone oil and water are commonly used for this purpose.

3. Dripping pills should be round, integrate, uniform in colour and also well shaped without adhesion. No cooling liquid remains on the surface of dripping pills.

4. Dripping pills may be coated as required to suit for the properties of the medicaments and for the clinical usage and storage.

5. Unless specified otherwise, dripping pills should be kept in tightly closed containers.
Following relevant test should be carried out for dripping pills.

Weight variation Unless specified otherwise, the limit of weight variation for dripping pills complies with the following requirements.

Average weight	Limit of weight variation	
0.03 g or less	±11%	±15%
more than 0.03 g to 0.1 g	±10%	±12%
more than 0.1 g to 0.3 g	±8%	±10%
more than 0.3 g	±7%	±7.5%

Procedure Weigh accurately the total weight of 20 dripping pills, calculate the average weight of each dripping pill. Then weigh accurately each of the 20 dripping pills. Compare the weight of each pill with the average weight. According to the requirements stated in the table, not more than 2 pills deviate outside the limit of weight variation, none deviates outside 1 fold of the limit.
The weight variation of sugar-coated dripping pills should be examined before coating. Dripping pills are not to be coated until the weight variation of their cores complies with the requirements. The test of weight variation is not required for dripping pills after sugar-coating, but it is needed for dripping pills after film-coating and should comply with the specified requirements.

Disintegration test Carry out the test as described under disintegration test (Appendix Ⅺ A), it should comply with the specified requirements, unless otherwise specified.

Microbial limit test Comply with the requirements stated under Microbial Limit Tests (Appendix Ⅷ C).

Ⅰ L Capsules

Capsules are preparations made by mixing crude drugs processed by suitable methods and appropriate excipients, enclosing in capsule shell or sealing in soft capsule. Capsules are classified into hard, soft or enteric shells, mainly for oral administration.

Hard capsules Consist of crude drug extracts, crude drug extracts with fine powders of crude drugs, fine powders of crude drugs or any of the above with appropriate excipients, usually in uniform powder, mini granules, mini pills, semisdids or liquids, enclosed in a capsule shell.

Soft capsules Prepared by drip-feed or compression method. The extracts of crude drugs, liquid medicaments or any of above well mixed with appropriate excipients are sealed in soft capsules.

Enteric capsules Enteric capsules are capsules that are insoluble in gastric fluid, but can disintegrate or release the active substance in intestinal fluid.
The production and storage of capsules should comply with the following requirements.

1. Crude drugs should be made into the contents of capsules as specified in the individual monograph and may not result in neither deformation of shells nor in deterioration.

2. Potent medicaments given in small doses are usually mixed thoroughly with suitable diluents before filling.

3. Capsules should have a clean, smooth surface and well shaped without adhesion, deformation leakage, breakage or foreign odour.

4. Capsules should be preserved in tightly closed container, unless specified otherwise.
Following relevant tests should be carried out for capsules.

Water determination Water determination for hard capsules is required the water content in the contents of hard capsule, is determined by the methods described in Determination of Water (Appendix Ⅸ H). Unless otherwise specified, the water content is not more than 9.0 per cent. Water determination is not required while the contents of hard capsule are liquids or semisolids.

Filling variation Unless specified otherwise, weigh accurately 10 capsules respectively, remove the content as completely as possible (no loss of capsule shell). For hard capsule. clean the shell with a small brush or other appropriate tools; for soft capsule or hard capsule containing liquids or semisolids, wash the shell with ether or other easily volatile solvents and allow to ventilate until the odour of the solvents is no longer perceptible. Weigh accurately the shell of each capsule. The difference between the weights represents the filling of each capsule. Compare the filling of each capsule with the labelled filling (if no labelled filling is stated, compare the filling of each capsule with the average filling calculated). The filling variation limit should be within ±10%. No more than two of the individual filling deviate outside the limit and none deviates outside 1 fold of the limit.

Disintegration test Carry out the test as described under Determination of Disintegration (Appendix Ⅻ A), it should comply with the specified requirements, unless otherwise specified.

Microbial limit test Comply with the requirements stated under Microbial Limit Tests (Appendix ⅩⅢ C).

I M Medicinal Wines

Medicinal wines are clear liquid preparations prepared by maceration and extraction of crude drugs with distilled wine.
The production and storage of medicinal wines should comply with the following requirements.

1. Generally, the crude drugs for producing medicinal wines should be properly processed into slices, sections, pieces, slivers or coarse powders.

2. Medicinal wines used for oral administration should be prepared with wines made from grains.

3. Medicinal wines may be prepared by maceration, percolation or other suitable methods. The concentration and quantity of distilled wine, temperature and duration for maceration, speed of percolation, should comply with the requirements for preparation described under individual monograph.

4. Medicinal wines may be flavoured by adding a sufficient quantity of sugar or honey as required.

5. Medicinal wines being prepared should be allowed to stand for clarifying then filtered and packed in clean containers. A small amount of dispersibe precipitates during storage are allowed.

6. Ethanol content should be generally determined for medicinal wines.

7. Unless specified otherwise, medicinal wines should be preserved in tightly closed containers and stored in a cool place.
Following relevant tests should be carried out for medicinal wines.

Total solids Determination of total solids in medicinal wines is generally required. Medicinal wines containing sugar or honey should be examined by method 1, sugar or honey free medicinal wines should be examined by method 2.

Method 1 Transfer accurately 50 ml of the clear medicinal wine to an evaporable dish and evaporate to a thick extract on a water bath. Unless specified otherwise, extract the residue with 4 quantities, each of 10 ml, of dehydrated ethanol with stirring, and filter. Combine the filtrates to another evaporating dish which have been dried to a constant weight and evaporate nearly to dryness on a water bath, add accurately 1 g of diatomite (dry at 105℃ for 3 hours and cooled in a desiccator for 30 min), stir thoroughly, dry at 105℃ for 3 hours, cool the dish in a desiccator for 30 min, and weigh immediately. Deduct the weight of diatomite added, the weight of residue should comply with the requirements stated under the individual monograph.

Method 2 Transfer accurately 50 ml of the clear medicinal wine to an evaporable dish which have been dried to a constant weight and evaporate to dryness on a water bath, then dry at 105℃ for 3 hours. After cooling the dish containing the residue in a desiccator for 30 min, weigh it immediately. The weight of residue should comply with the requirements stated under the individual monograph.

Determination of methanol Comply with the Determination of Methanol (Appendix Ⅸ T).

Filling Comply with the test for Minimum Fill (Appendix Ⅻ C).

Microbial limit test Carried out the Microbial Limit Tests (Appendix ⅩⅢ C), the number of bacteria should not exceed 500 per ml, the number of mildew and microzyme should not exceed 100 per ml, no Escherichia coli should befound.

I N Tinctures

Tinctures are clear liquid preparations of medicinal substances macerated or dissolved in ethanol of specified

concentration or made by diluting the liquid extracts, extended for oral administration or external application.
The production and storage of tinctures should comply with the following requirements.

1. Unless specified otherwise, tinctures containing poisonous drugs are generally equivalent to 10 g of the drug in 100 ml of the tincture; the active ingredients of a tincture containing poisonous drugs may be determined by an assay of its intermediate product and then the potency adjusted to produce a finished product that complies with the requirements stated in the individual monograph; most of other tinctures represent 20 g of the drug in 100 ml of the tincture.

2. Tinctures may be prepared by dissolution, dilution, maceration or percolation.

(1) *Dissolution or dilution* Dissolve a quantity of drug powder or liquid extracts with a quantity of ethanol with specified concentration, allow to stand, filter if necessary.

(2) *Maceration* Macerate the properly powdered crude drugs with a quantity of solvent in a stoppered container for 3-5 days or a specified time, stirring or shaking occasionally. Separate out the supernatant liquid, and add a quantity of the solvent to the residue, and continue the maceration in the same way until the active ingredients are completely extracted. Combine the extracts and add solvent to volume as required, allow to stand for 24 hours and filter.

(3) *Percolation* Percolate with a quantity of solvent as described under Liquid Extracts and Extracts (Appendix Ⅰ O) until required quantity of the percolate is obtained, allow to stand and filter.

3. Ethanol content should be generally determined for tinctures.

4. Precipitates produced on prolonged standing of the tincture may be removed by filtration provided that the content of active ingredients and ethanol still comply with the requirements stated in the monograph.

5. Tinctures should be preserved in light-resistant, tightly closed containers and store in a cool place, unless specified otherwise.
Following relevant tests should be carried out for tinetures.

Filling Comply with the test for Minimum Fill (Appendix Ⅻ C).

Microbial limit test Comply with the requirements stated under Microbial Limit Tests (Appendix ⅩⅢ C).

Ⅰ O Liquid Extracts and Extracts

Liquid extracts or extracts are preparations made by soaking crude drugs in suitable solvents to extract the active ingredients and evaporating the solvents partially or completely to a specified concentration.
The production and storage of liquid extracts or extracts should comply with the following requirements.

1. Unless specified otherwise, 1 ml of a liquid extract is equivalent to 1 g of the crude drug concerned; 1 g of an extract is equivalent to 2-5 g of the crude drug concerned.

2. Unless specified otherwise, liquid extracts are prepared by percolation method or by the dilution of an extract with a specified solvent. Extracts are prepared by decoction or percolation method, all the extractike should be concentrated to a thick extract at a low temperature and then added with diluenting agents or further concentrated to the specified ammont. The following requirements should be observed in a percolating process.
(1) Either a cylindrical or a conical percolator may be used, depending on the nature of the crude drug.
(2) Before it is packed into the percolator, the crude drug should be pulverized properly, moistened uniformly with the specified solvent and allowed to stand in a well closed vessel for a required time.
(3) The crude drug should be packed with uniform compactness and the solvent is added to the percolator to expel most of the air in the gap of crude drug. The top of the column of crude drug should be well covered by the solvent, allow to stand for some time before the percolation takes place.
(4) The rate of percolation should comply with that specified in the individual monograph.
(5) When an amount of the initial percolate equivalent to 85% of the crude drug in the percolator has been collected, it is set aside. The rest of the percolate should be concentrated at a low temperature and the mixed products of percolation and concentration are made up to the required volume with the solvent. Allow to stand, and use the supernatant liquid as the final product for packing.

3. Ethanol content should be generally determined for liquid extracts. Precipitates produced on prolonged standing of the liquid extracts may be removed by filtration, but the content of ethanol and active ingredients comply with that specified in the monograph.

4. Unless specified otherwise, liquid extracts should be preserved in tightly closed containers, protected from light, extracts should be stored in a cool place.
Following relevant tests should be carried out for Liquid Extracts & Extracts.

Filling Comply with the test for Minimum Fill (Appendix Ⅻ C).

Microbial limit test Comply with the requirements stated under Microbial Limit Tests (Appendix ⅩⅢ C).

Ⅰ P Plasters

Plasters are preparations intended for external application to the skin, prepared by refining crude drugs, edible vegetable oil and red lead oxide or ceruse as plaster and spreading on the backing material. The former is called black plasters, the latter white plasters.
The production and storage of plasters should comply with the following requirements.

1. The drugs should be broken or cut appropriately, and fried to char as described under the individual monograph; the crude drugs which are light in texture and unbearable to frying, should be added after the other crude drugs are fried to charred yellow.
Crude drugs containing volatile substances, mineral drugs and precious drugs should be grind into fine powders and added just before spreading at a temperature not higher than 70℃.

2. Red lead oxide or ceruse used should be dry, without agglomeration because of moisture absorption.

3. The oil after frying the crude drugs should be refined to "pearl form on dropping". Add red lead oxide or ceruse and stir to mix well and spray with clean water. The plaster lumps are formed and soaked in clean water.

4. Plasters should be, greasy, delicate and bright. They should be done appropriately and spread evenly, with no, breach or gap, and they should be able to stick on the skin without moving after heated. Black plasters should be black, with no red spots; white plasters should be, with no white spots.

5. Plasters should be preserved in tightly closed containers and stored in a cool place, unless specified other wise.
Following relevant tests should be carried out for plasters.

Softening point Carry out the test for Determination of Plaster Softening Point (Appendix XII D) and should comply with the requirements stated under the individual monograph.

Weight variation Weigh separately 5 pieces of plasters, clip a unit area (cm^2) of backing material and weigh. Calculate the weight of backing material of each piece of the plaster. The weight of drugs on the plaster is calculated by subtracting the weight of backing material from the total weight of the plaster. It should comply with the limit given in the table according to the specified labelled weight.

Labelled weight	Weight variation limit
3 g or less	±10%
more than 3 g to 12 g	± 7%
more than 12 g to 30 g	± 6%
more than 30 g	± 5%

I Q Gels

Gels are semisolid or thick liquid preparations with gel-natures which are made by mixing extracts of crude drugs and suitable bases. Gels are divisible into water-soluble gels and greasing gels according to the characters of the bases used.
The production and storage of gels should comply with the following requirements.

1. Crude drugs are extracted, purified using methods directed in individual monographs to produce the intermediate products for late gels manufacture.

2. The choices for appropriate bases depend mainly on the nature of the chief crude drug. Water-soluble bases consist of water, glycerin or propylene glycol and derivatives of cellulose, carbopol, alginate, tragacanth, gelatin or starch ect; greasing bases consist of liquid paraffin and polyoxyethelene or fatty oil and silicon colloid, aluminum soaps or zinc soaps. Additives such as hygroscopic agents, preservatives, antioxidants or skin penetrants may be added if necessary.

3. Gels should be uniform, thin and smooth, stay gelations, without dryness or liquescence at normal temperature.

4. Determination of pH value is generally required.

5. No physicochemical reaction should occur between the bases and the medicaments.

6. Unless specified otherwise, gels should be preserved in well closed containers, protected from light and prevented frostbite.
Following relevant tests should be carried out for gels.

Filling Comply with the test for Minimum Fill (Appendix XII C).

Microbial limit test Comply with the requirements stated under Microbial Limit Tests (Appendix XIII C).

I R Ointments

Ointments are semi-solid preparations with a suitable consistency, usually containing extracts or fine powders of crude drugs incorporated in a suitable base, and intended for external application to the skin. The bases mainly used in preparation of ointments may be classified into greasing bases, water-soluable bases and emulsifying bases. Ointments with emulsifying bases are usually known as creams, which are classified into oil-in water creams and water-in-oil creams according to the bases used.
The production and storage of ointments should comply with the following requirements.

1. In the preparation of ointments, solid medicaments should be powdered finely before use in addition to their dissolution in or formation of an eutectic mixture with one of the ingredients.

2. Ointments should be able to apply uniformly and emolliently to the skin with no irritant action and with proper consistency.

3. Commonly used greasing bases consist of vaselin, paraffin, liquid paraffin, siloxane fluid, beeswax, stearic acid etc; water-soluble bases mainly consist of polyethylene glycols; emulsifying bases consist of sodium soaps, soaps of triethanolamine, sodium fatty alcohol sulphate (sodium dodecyl sulphate), polysorbate, lanolin, monoglycerides, fatty alcohol and so on. Hygroscopic agents, preservatives, antioxidants or skin, penetrants may be added if necessary.

4. Ointments should show no evidence of deterioration such as rancidity, discolouration, hardening melting or separation of oil and water.

5. Unless specified otherwise, ointments should be preserved in well closed containers, protected from light.
Following relevant tests should be carried out for ointments.

Particle size Unless specified otherwise, spread a proper quantity of ointments containing fine powders of crude drugs on the slide to form a thin layer, cover with coverslip. Prepare 3 pieces in all. Carry out the Determination of Particle Size (Appendix XI B, method 1), no particles larger than 180 μm in diameter should be found.

Filling Comply with the test for Minimum Fill (Appendix XII C).

Sterility Ointments used for burn or severe damage should comply with the Test for Sterility (Appendix XIII B).

Microbial limit test Comply with the requirements stated under Microbial Limit Tests (Appendix XIII C).

I S Medicinal Distillates

Medicinal distillates are the aromatic waters prepared by steam distillation of the crude drugs containing volatile constituents.
The production and storage of medicinal distillates should comply with the following requirements.

1. Crude drugs should be macerated in water for a certain time before steam distillation, distillates collected should be stored in sterilized, clean and dry containers in time.

2. Collection of distillates and procedures of filling should be carried out under circumstances with required cleanliness. Steam sterilization may also be applied after filling.

3. Suitable preservatives and correctives may be added to the medicinal distillates if necessary, the variety and quantity used should comply with the requirements stated in notional standards.

4. Medicinal distillates should be clear, and show no evidence of deterioration such as foreign matter, rancidity ect.

5. Determination of pH value is required.

6. Medicinal distillates should be preserved in tightly closed containers, stored in a cool place, unless specified otherwise.

Following relevant tests should be carried out for medicinal destillates.

Filling Comply with the test for Minimum Fill (Appendix Ⅻ C).

Microbial limit test Comply with the requirements stated under Microbial Limit Tests (Appendix Ⅻ C).

Ⅰ T Medicinal Teas

Medicinal teas are preparations intended for oral administration, which are made by mixing crude drugs or extracts (liquid extractives) of crude drugs with tea or other excipients. They consist of medicinal bea lumps, medicinal bag-packed teas and medicinal teas for decoction.

Medicinal tea lumps are classified into sugar free tea lumps and sugar containing tea lumps. Sugar free tea lumps are those prepared by compacting the coarse powder, broken pieces of crude drugs, and tea or suitable adhesive. Sugar containing tea lumps, by compacting extracts or fine powders of crude drugs and suitable excipients such as sugar and so on.

Medicinal bag-packed teas are those prepared by packing bags with tea, coarse powder of crude drugs or partial crude drugs absorbing liquid extractives and then dried. The medicinal bag-packed teas packed into drinking bags are called tea bags.

Medicinal teas for decoction are those prepared by packing bags with slices, pieces, sections, slivers or coarse powder of the crude drugs, and decocted for drinking.

The production and storage of medicinal teas should comply with the following requirements.

1. The crude drugs to be used should be processed into slices, pieces, sections, slivers or coarse powders according to the requirements, and mixed well. The liquid extractives should be sprayed evenly. Where crude drugs and extracts of crude drugs are added with suitable adhesive or excipients such as sugar etc., a uniform mixture is required.

2. Drying should be carried out at a temperature below 80℃ generally; medicinal teas containing large amount of volatile constituents should be dried at a temperature below 60℃ and the thermolabile drugs should be dried with proper methods.

3. Tea and drinking tea bags should comply with the specified requirements of drinking tea.

4. Medicinal teas should be preserved in well closed containers, medicinal teas containing volatile and moisture absorbing drugs should be preserved in tightly closed containers.

Following relevant tests should be carried out for medicinal teas.

Determination of Water *Sugar-free tea lumps* Carry out the method for determination of water (Appendix Ⅸ H). Unless specified otherwise, they contain not more than 12.0 per cent of water.

Sugar containing tea lumps Grind the tea lump into particles with about 3 mm in diameter. Carry out the method for determination of water (Appendix Ⅸ H). Unless specified otherwise, they contain not more than 3.0 per cent of water.

Bag-packed teas and teas for decoction Carry out the method for determination of water (Appendix Ⅸ H). Unless specified otherwise, they contain not more than 12.0 per cent of water.

Determination of dispersibility Sugar containing tea lumps should comply with the following test.

Procedure Take one lump of sugar containing tea lumps, add twenty twice of hot water, stir for 5 minutes. The tea lump should be completely dissolved (allowed to have slight turbidity); showing no burned charings, etc.

Weight variation Medicinal tea lumps should comply with the following test.

Procedure Weigh 10 lumps of medicinal tea respectively, each compares with the labelled weight. Sugar-free tea lumps and sugar. Containing tea lumps should comply with the requirements stated in table 1 and table 2 below respectively. not more than 2 lumps exceed the limit, and none doubles the limit.

Filling variation Unless specified otherwise, medicinal bag-packed teas and medicinal teas for decoction should comply with the following test.

Procedure Weigh the contents of 10 packs respectively, each compares with the labelled filling, not more than 2 packs exceed the limit given in Table 1 and none doubles the limit.

Table 1

Labelled weight or filling	Weight or Filling variation limit
2 g or less	±15%
more than 2 g to 5 g	±12%
more than 5 g to 10 g	±10%
more than 10 g to 20 g	± 6%
more than 20 g to 40 g	± 5%
more than 40 g	± 4%

Table 2

Labelled weight	Weight variation limit
more than 1.5 g to 6 g	±7%
more than 6 g	±5%

Microbial limit test Comply with the requirements stated under Microbial Limit Tests (Appendix Ⅻ C), except teas for decoction.

I U Injections

Injections are sterile products prepared by purifying the extracts of crude drugs, intended for parenteral adiministration into body, including solutions or emulsions, as well as powders or concentrated liquids, which are prepared or diluted to solutions before use.

Injections are classified into liquids for injection, sterilized powders for injection and concentrated liquids for injection.

Liquids for injection Liquids for injection are sterile solutions or emulsions, intended for parenteral administration into body, which can be applied to intramuscular injection, intravenous injection or intravenous drip. Thereinto, liquids for injection with large volume (unless specified otherwise, the volume is not less than 100 ml) for intravenous drip are also called intravenous transfusions.

Sterilized powders for injection Sterilized powders or lumps, which on the addition of suitable sterile solvent, yield solution before use. They may be confected with appropriate solvents for injection, also with intravenous infusion solutions for intravenous drip. Sterile powders are prepared by freeze-drying or spray-drying, sterile lumps are prepared by freeze-drying.

Concentrated solutions for injection Concentrated solutions for injection are the thick sterile solutions prepared for a late intravenous drip.

The production and storage of injections should comply with the following requirements.

1. Unless specified otherwise, crude drugs are extracted, purified using methods directed in individual monographs to produce the intermediate products which are put into manufacture of injections.

2. Solutions for injection should be clear; emulsions for injection should be stable without phase separation and should not be applied to intraspinal route. The size of 90% particles in dispersed phase in emulsions for intravenous injection should be less than 1 μm, there should be no particle larger than 5 μm. Intravenous Infusion solutions should be isoosmotic with blood as far as possible.

3. Solvents employed for injections should be safe and harmless, have no effect on therapeutic efficiency and quality of the drug. They are classified into aqueous and nonaqueous solvents. Besides the most commonly used water, solution of 0.9% of sodium chloride or other appropriate substances may also be employed as aqueous solvents. The commonly employed nonaqueous solutions are vegetable oils mainly containing bean oil which should meet the standards of bean oil (for injection.) In addition, the other solutions such as alcohol, propylene glycol, polyethylene glycol etc. may be applied.

4. While preparing injections, suitable adding may be added, depending upon the characteristics of the medicaments. Such as osmotic adjustors, adjustors for pH values, solubilizing agents, antioxidants, bacteriostatic agents, emulsifiers, suspending agents and so on. Addition agent used should have no effect on therapeutic effect and have no interference with proof-test. The concentration should not be so high as to bring toxicity or excess stimulation. The commonly used antioxidants consist of sodium sulphite, bisulphite and metabisulphite, the concentrations generally used are 0.1%-0.2%. Bacteriostatic agents commonly used consist of phenol 0.5%, cresol 0.3%, tert-trichlorobutanol 0.5% and so on. Switable bacterio-static agents may be added in injections in multidose. The amount of bacteriostatic agents should be sufficient for prohibiting the growth of microorganisms in the injections. Steruization processess are required even though bacteriostatic agents applled. Intravenous infusion solutions and injections for intracistern injection, epidural injection, intraspinal injection should not be added with bacteriostatic agents, Unless specified otherwise, no bacteriostatic should be added while the volume of sigle injection exceeds 15 ml.

5. Containers filled with injections commonly consist of glass or plastic ampoules and vials. (bags). The airtight nature of containers should be testified by suitable methods. Unless specified otherwise, containers should comply with the requirements about medicinal glass containers and plastic containers stated in national standards. Rubber closures used in containers, especially in containers for multi-dose injections should be elastic enough the quality of which should comply with the related requirements stated in National Standards.

6. During the manufacturing of injections, effective measures should be adopted to short the time of preparation as far as possible to avoid the microbes and pyrogen contamination and to prevent deterioration. The preparation procedure for intrevenous infusion solutions should be controlled more strictly. Necessary measures should be taken to ensure the size of particles comply with the requirements stated in the quality standards during the manufactaring of emulsions for injection. Sterile powder for injection should be prepared aseptically.

7. The container can be fuled with the excess quantity appropriately according to the following table. If the labelled quantity is no more than 50 ml. Unless specified otherwise, a container may contain medicaments of multiple doses, but not more than 10 doses, and the excessive quantity in such containers is sufficient to permit withdraw and administration of the labelled quantity of each dose.

Labelled quantity (ml)	Excess quantity (ml)	
	Mobile liquid	Viscous liquid
0.5	0.10	0.12
1	0.10	0.15
2	0.15	0.25
5	0.30	0.50
10	0.50	0.70
20	0.60	0.90
50	1.0	1.5

For solutions containing medicaments liable to deterioration on exposure to air, the air in the containers should be excluded or displaced by inert gases such as carbon dioxide or nitrogen in the process of filling right before the containers are sealed by fusion.

8. After being closed hermetically, injections are sterilized using the appropriate methods according to the characteristics of the medicaments to ensure the sterility of the finished products. After being sealed by fusion, containers of injections should undergo leak-proof test under reduced pressure or by other suitable methods during or after the sterilizing process.

9. Unless specified otherwise. The storage of injections should be protected from light.

10. For the injections have been added with bacterilostatic agents, the concentration and the name of the agents should be indicated on the label. White for sterne powders for injection, the solvent used should be marked.

11. For the intermediate of injections, tests for heavy

metals, arsenic salts should be conducted. Unless specified otherwise, limit of heavy metals is not more than 10 per million (Appendix Ⅸ E, Method 2); limit of arsenic salts not more than 2 per million (Appendix Ⅸ F, Method 1). Organic destraction is needed during the test.
Following relevant tests should be carried out for injections.

Filling The filling of liquids for injection and the concentrated liquids for injections should comply with the following resource examination.

Procedure Select 5 containers if the labelled quantity is not more than 2 ml; 3 containers if the labelled quantity is more than 2 ml to 50 ml. Open the containers with caution to avoid any loss of the contents. Remove individual content of each container by suitable dry syringes with corresponding volure and pinhead to individual calibrated graduated apparatus (the cubage measured is at least 40% of the rated volume of the apparatus), and measure the volume at room temperature. For injections of oily liquids, warm containers and shake thoroughly before removing the contents by suitable dry stringes and pinhead do as above. Cool to room temperature before measuring the volume. The content in each container is not less than the labelled quantity of the injection.
Liquids and concentrated liquids for injection with labelled quantity more than 50 ml to 500 ml should comply with the test for Minimum Fill (Appendix Ⅻ C).

Filling variation Unless specified otherwise, the filling variation of stericized. powders for injection should comply with following requirements.

Average filling	filling variation limit
0.05 g or less	±15%
more than 0.05 g to 0.15 g	±10%
more than 0.15 g to 0.5 g	± 7%
more than 0.5 g	± 5%

Procedure Remove any adherent label and the aluminium cover from the sealed container, and wash the outside with ethanol and dry thoroughly. Open the container with caution to avoid foreign matters such as scraps of glass dropping into the containers, and weigh all part of the container and its contents without delay. Remove the contents, wash the container with water or ethanol, dry under suitable conditions and weigh. The difference between the weights represents the weight of the contents. Repeat the operation with a further four containers and determine the average weight. The weight variation of each container does not deviate from the average weight by a percentage greater than that shown in the table. If the weight variation of one container does not comply with the requirements, repeat the operation with another 10 containers. All of them should comply with the test.
No test for filling variation is required for the sterile powders for injection that require the test for content uniformity.

Visible particles Unless specified otherwise, comply with the Test for Visible Particles (Appendix Ⅺ C).

Particulate matter Unless especially otherwise, solutions for intravenous and infusing use, sterile powder for injection concentrated liquids for injection should be prepared according to the concentrations for clinical use, comply with the Test for Particulate Matter in Injections (Appendix Ⅸ R).

Related substance Carry out the test stated in the individual monograph, comply with the Determination of Materials in Injection (Appendix Ⅸ S).

Sterility Comply with the requirements stated in the Test for Sterility (Appendix Ⅻ B).

Pyrogen or bacterial Endotoxins Injections for intravenous use comply with the requirements of the Test for Pyrogen (Appendix Ⅻ A) or Test for Bacterial Endotoxin (Appendix Ⅻ D) as specified in the individual monograph.

Ⅰ Ⅴ Liniments, Lotions, Smeared films

Liniments, lotions and smeared films are liquid preparations intended for external application.
Liniments are liquid preparations intended for external application by rubbing on unbroken affected part, made of extract of crude drugs in alcohol, oils or other suitable solvents. And liniments with oils solvents are called oily liniments.
Lotions are liquid preparations made of extract of crude drugs by appropriate methods, which are intended for washing or smearing on skin or cavity.
Smeared films are liquid preparations for external smearing to form a film, containing film-forming materials and crude drugs extracted and dissolved by suitable solvents and methods.
Production and storage of Liniments, Lotions, Smeared films should comply with the following requirements.

1. Unless specified otherwise, crude drugs are extracted, purified using the method stated in individual monographs, or pulverized to fine powder.

2. Solvents commonly used for liniments consist of water, ethanol, glycerin, vegetable oils, liquid paraffin; lotions use mainly aqueous solutions; Ethanol is commonly used as solvent for smeared films, film-forming materials commonly used consist of polyvinyl alcohol, polyvinylpy rrolidone, acrylie acid resins and so on. Plasticizers commonly used consist of glycerin, propylene glycol, dibutyl phalate and so on; If necessary, appropriate additives may be added and the excipients added should show no evidence of irritation to skin or mucosa.

3. Unless specified otherwise, test for relative density, pH value should be generally specified for those with water or diluted alcohol as solvents; Test for the amount of alcohol should be specified for those with alcohol as solvents. For those in which oils are used as solvents, there should be no deteriorations such as rancidity etc., and test for refractive index is required.

4. Preserved in well closed containers, unless specified otherwise.
Following relevant tests should be carried out for liniments, lotions. smeared films.

Filling Comply with the test for Minimum Fill (Appendix Ⅻ C).

Microbial limit test Comply with the requirements stated under Microbial Limit Tests (Appendix Ⅻ C).

Ⅰ Ⅵ Suppositories

Suppositories are solid preparations made by incorporating extracts of crude drugs or finely powdered crude drugs in suitable bases, intended for administration to the cavities of the human body.
The production and storage of suppositories should comply

with the following requirements.

1. Semi-synthetic fatty glycerides, cocoa butter, polyoxyethylene stearate, hydrogenated vegetable oil, glycerinated gelatin, mixtures of polyethylene glycols of various molecular size and other suitable materials may be used as suppository bases. If necessary, surfactants may be added to improve the release and absorption of medicaments in the body.

2. Solid drug substances, unless otherwise specified, should be pulverized to fine or very fine powders before use. Suppositories may be made in different shapes according to the cavities conditions and the application.

3. The drug substances and bases in suppositories should be thoroughly mixed. Suppositories are smooth in appearance, uniform in texture and non-irritating. Suppositories are molten, soften or dissolved when inserted in the cavities and are miscible with body fluid to release the medicaments gradually and exert local or systemic effects. Suppositories are sufficiently hard to withstand handling or packaging without deformation.

4. Unless specified otherwise, suppositories should be preserved in well closed containers and stored at a temperature below 30℃ to protect from deformation mould contamination or deterioration due to excessive heat and moisture.
Following relevant tests should be carried out for suppositories.

Weight variation Suppositories should comply with the weight variation limit stated in the table below.

labelled or Average weight	Weight variation limit
1 g or less	±10%
more than 1 g to 3 g	±7.5%
more than 3 g	±5.0%

Procedure Weigh accurately together 10 suppositories and determine average weight, then weigh individually each of the 10 suppositories. Compare the weight of each suppository with the labelled weight (if no labelled weight is stated, compare the weight of each suppository with the average weight calculated). According to the requirements stated in the table, not more than one of the individual weight deviates from the weight variation limit shown in the table, and none deviates by more than twice of that percentage.

Disintegration test Unless specified otherwise, suppositories should comply with the requirements stated under Disintegration test (Appendix Ⅻ B).

Microbial limit test Comply with the requirements stated under Microbial Limit Tests (Appendix ⅩⅢ C).

Ⅸ X Nasal Preparations (including nasal drops)

Nasal preparations are preparations intended for nasal cavity use to exert local or systemic effect, which are made of extract of crude drugs, crude drugs or chemical medicaments.
Nasal preparations are classified into liquid preparations for nasal use (nasal drops, nasal sprays, nasal washes), semi-solid preparations for nasal use (nasal pastes, nasal creams) and solid preparations for nasal use (nasal powders).
The production and storage of nasal preparations should comply with the following requirements.

1. Crude drugs should be extracted and purified using the method stated in individual monograph, or pulverized to specified particle site by suitable methods.

2. Excipients for nasal preparations may be added according to the characteristics of chief drugs and demands of dosage forms. solvents such as water, propylene glycol, liquid paraffin, vegetable oils etc. are commonly applied to liquid preparations for nasal use. Greasy base such as vaselin, lanolin; emulsive bases such as soap, polysorbate, etc, and aqueous bases such as polyethylene, poloxamer etc. are commonly applied to semi-solid preparations for nasal use. If necessary, solubilizing agents, suspending agents, emulsifiers, preservatives etc. may be added.

3. Nasal preparations should show no evidence of irritation and side effect to the mucosa and cilia of nasal cavity. The aqueous nasal drops may require the use of excipients to adjust the pH values, and to make it isoosmotic with the mucus of nasal cavities.

4. Solutions for nasal use should be clear without precipitation and foreign matter. Particles in suspensions for nasal use should be fine and smooth, dispersed evenly. The sediment may not agglomerate on standing, and may generally show no evidence of phase seperation in several minutes after shaking. Particles in emulsions should disperse evenly. The phase separation may occur on standing, but the seperation should be readily redispersed by shaking to give a emulsion. Semi-solid preparations for nasal use should be soft and smeared easily.

5. Nasal preparations should comply with the requirements stated under the individual monographs about related dosage forms.

6. The filling amount of each container of nasal preparations should not exceed 10 ml or 5 g, unless specified otherwise.

7. Unless specified otherwise, nasal preparations may be preserved in tightly closed containers.
Following relevant tests should be carried out for nasal preparations.

Filling Unless specified otherwise, Comply with the test for Minimum Fill (Appendix Ⅻ C).

Sterilily Nasal preparations for severe trauma should comply with the requirements stated under the Test for Sterilily (Appendix ⅩⅢ B).

Microbial limit test Comply with the requirements stated under Microbial Limit Tests (Appendix ⅩⅢ C).

Ⅰ Y Ophthalmic Preparations (including Ophthalmic drops)

Ophthalmic preparations are preparations made of extract of crude drugs, or crude drugs intended for direct eye use to obtain the therapeutic effect. Ophthalmic preparations are classified into liquid preparations for eye use (ophthalmic drops), semi-solid preparations for eye use (ophthalmic ointment) etc, Some are packed in the form of solids along with solvents in the package, to prepare solutions or suspensions before use.
The production and storage of ophthalmic preparations should comply with the following requirements.

1. Crude drugs should be extracted and purified using the method stated in individual monographs, or pulverized to

powder with specified particle size using suitable method.

2. Excipients may be added in ophthalmic drops to adjust osmotic pressure, pH value, viscosity and improve the solubility of medicaments and the stability of preparations, Excipients used should show no evidence of decreasing the efficacy or causing local irritation. Ophthalmic drops with determined pH value should be isoosmotic with tear, unless specified otherwise, the filling amount of each container should not exceed 10 ml of the preparation. The transparency of the container should guarantee the visible foreign matters check.

3. Bases for ophthalmic ointment should be uniform, fine, irritation, and spreaded easily to improve the dispersion and absorption of medicaments. Insoluble crude drugs should be pulverized to ultra fine powders by appropriate methods. The based added should be filtrated and sterilized before preparation. Unless specified otherwise, the filling amount of each container should not exceed 5 g of the preparation.

4. Ophthalmic preparations should comply with the requirements stated under individual monographs about related dosage form.

5. Unless specified otherwise, ophthalmic preparations should be preserved in tightly closed containers, protected from light, and stored in cool place.
Following relevant tests should be carried out for ophthalmic preparations.

Visible particles Unless specified otherwise, ophthal-mic drops should comply with the Test for Visible Particles (Appendix Ⅺ C).

Particle size Unless specified otherwise, ophthalmic preparations containing powders of crude drugs should comply with the following test.
Ophthalmic drops in suspension Shake vigorously and take suitable quantity of the suspension immediately, then drop on the microscope slide. Carry out the Determination of Particle Size (Appendix Ⅺ B, method 1), no particle larger than 90 μm in diameter should be found.
Semi-solid preparations for ophthalmic use in suspension select 10 in random, squeeze all the contents thoroughly in an appropriate container and mix well. Take suitable quantity and put on the microscope slide, spread to form a film, cover with cover slide. Prepare 3 slides. Carry out the Determination of Particle size (Appendix Ⅺ B, method 1), no particle larger than 90 μm in diameter should be found.

Foreign Metals Unless specified otherwise, semi-solid preparations for eye use should comply with the following test.
Select 10 in random, squeeze all the contents thoroughly in a petri dish of 6 cm in diameter with smooth bottom, no visiable foreign matters and bubbles. Cover the dish, and keep it at the temperature of 85℃ for 2 hours to make the preparation melt and spread equably, keep the preparation at the room temperature till its concreting, then put the dish upside down on an appropriate microscope desk. Cast the light of focus lamp at the angle of 45° from upside onto the bottom of the dish (magnifying power, 30 folds). Detect the shining foreign metals with the particle size not less than 50 μm in diameter. The number of the preparation which contains foreign metals exceeding 8 grains should be no more than 1 in every ten samples examined and the total grains should not exceed 50. If not, take another 20 containers for retest, calculate the results of the two tests, the number of the preparation which contains foreign metals exceeding 8 grains should be no more than 3 in 30 samples examined and the total grains should not exceed 150.

Filling Comply with the test for Minimum Fill (Appendix Ⅻ C).

Sterilily Ophthalmic preparations for wound should comply with the Test for Sterilily (Appendix ⅩⅢ B).

Microbial limit test *Liquid preparations for ophthalmic use* Unless specified otherwise, carry out the test by membrane filtration method or direct inoculation method (Appendix ⅩⅢ B Test for Sterility), take specified quantity from at least 2 preparations (inoculate two into each kind of medium, 1 ml per container), inoculate into Thiogly collate medium or modified Martin Broth medium directly or after processing. There should be no bacteria growing after 7 days' culturing. If not, take twice amount of samples and retest by the method above, there should be no bacteria growth in each tube.

Other ophthalmic preparations Unless specified otherwise, comply with the requirements stated under Microbial Limit Tests (Appendix ⅩⅢ C).

Ⅰ Z Aerosols and Sprays

Aerosols are preparations containing extract of crude drugs, finely powdered crude drugs and appropriate propellant in pressurized containers fitted with specified valve equipment. Once the valve is turned on to release the substances, the contents are ejected from the containers by the pressure, in a fine mist, foam or other form. The Preparations of with contents are ejected in foam are defined as bubble bath, ejected in a mist or other form by the pressure supplied by hand-driven pump or other ways, instead of propellant, are defined as sprays. Aerosols and sprays consist of solutions, emulsions and suspensions according to the composition of the contents. They are administered for respiratory tract inhalation, and for topical use on skin, mucous membranes or cavities and so on.
The production and storage of aerosols and sprays should comply with the following requirements.

1. Crude drugs should be extracted, purified and concentrated using the methods stated in individual monographs.

2. Aerosols and sprays should be prepared under the clean circumstance with specified clean lines and filled promptly in the sterilized, clean and dried containers.

3. Appropriate additives such as solvents, solubilizing agents, antioxidants, surfactants, preservatives, etc... may be added, depending upon the characteristics of the medicaments. Various additives should show no evidence of irritation to respiratory tract, skin or mucous membranes.

4. Proper liquid gases with lower boiling points are commonly used as propellants for aerosols. According to the pressure required for an aerosol, a mixture of two or more propellants is applicable in a proper proportion.

5. Solutions for aerosolization and spray should be clear, droplets in emulsions and sprays should disperse evenly in liquid medium, and the fine powder of medicaments and additives should be mixed thoroughly and triturated to a fine state to produce a stable suspension. In the manufacturing process, water content, if necessary, should be controlled strictly to prevent from effect on the stability of the product. The particle and droplet size for inhalation aerosols and sprays should be less than 10 μm, most of them should be less than 5 μm. Finely powdered crude drugs are not applicable in general.

6. The containers for aerosols should be able to withstand the pressure supplied by the propellant. For the components of valve system, the precision of size and the solubilizing and swelling properties should comply with the relevant requirements, and show no evidence of reactions with the medicaments or additives used.

7. Unless specified otherwise, aerosols and sprays eject fine and uniform mist droplets or particles. A metered-dose valve releases a definite volume of the product in one operation of the valve button, and non-metered-dose valve is able to spray a uniform dose continuously. Sprays are capable of delivering a certain dose in one depression of the acutuator button.

8. Aerolsols and sprays should be labelled with the quantity of contents, quantity of active ingredient or extract of crude drugs. Aerosols equipped with metered-dose valve should state where applicable, total number of discharges per container, emitted quantity or content of active ingredient in each delivery.

9. Appropriate method should be adopted to monitor any leakage or explosion for safety measure.

10. Unless specified otherwise aerosols and sprays should be stored in a cool, dark place, with no exposure to heat or sunlight, and away from strike.

For aerosols with non-metered-dose valve system, tests for delivery rate and total amount of spray are required.

Delivery rate Select 4 aerosol containers in random, remove the caps and covers, actuate each valve for a few seconds, and blot to clean the outside of the containers from residual contents. Weigh individual containers accurately, immerse in a constant-temperature water bath (25 ± 1)℃ for 30 minutes. After removal and blotting of water, unless specified otherwise, actuate each valve continually for 5.0 seconds accurately timed, blot to clean and weigh individual containers accurately after blotting to remove the residual contents. Return the containers to the constant-temperature water bath, repeat the foregoing procedure three times. Calculate the average delivery rate (g/s) for each container, it complies with the requirement stated in individual monographs.

Total amount of spray Select 4 aerosol containers in random, remove the caps and covers. Weigh individual containers accurately, actuate each valve continually in a 1000 ml or 2000 ml conical flask in the ventilator until the container is empty, blot to clean and weigh individual containers accurately again. The total amount of spray per container is not less than 85% of the labelled amount.

For aerosols with metered-dose valve, tests for total number of discharges per container, emitted quantity or content of active ingredient in each delivery are required.

Total number of deliveries per container Select 4 aerosol containers in random, remove the caps and covers. Actuate individual valves continually in a 1000 ml or 2000 ml conical flask in the ventilator until the container is empty. Count the number of deliveries, the total number of deliveries per container is not less than the labelled number of deliveries.

Emitted quantity in each delivery Select 4 aerosol containers in random, remove the caps and covers, discharge several times and blot to clean. Weigh individual containers accurately, then actuate individual valves once more, blot to clean and weigh accurately each container again. The difference between weighings is one emitted quantity in each delivery. Three successive quantities emitted are determined by foregoing procedure; After ten successive deliveries without weighing, another three successive quantities emitted are determined by foregoing procedure; After another ten successive deliveries without weighing, the final four successive quantities emitted are determined. Calculate the average quantity emitted from the data of total ten emitted quantities that have been totally determined. The result is, unless specified otherwise, not less than 80 per cent and not more than 120 per cent of the labelled quantity in each delivery.

No test for emitted quantity in each delivery is needed for the preparations that require the test for content of active ingredient in each delivery.

Content of active ingredient in each delivery Select one aerosol container in random, shake thoroughly, remove the caps and covers, discharge 5 deliveries, wash the mouthpiece with a suitable solvent, dry thoroughly, stand the container inverted in a beaker with a certain quantity of absorptive solvent. Discharge 10 or 20 deliveries below (at least 25 mm) the surface of the solvent (actuating the valve at intervals of 5 seconds by shaking the container slowly), remove the container, wash the exterior and interior of the mouthpiece with the solvent, combine the washings. Determine the content of active ingredient by the Assay stated in the monograph, calculate the average content of active ingredient in each delivery. The result should comply with the requirement specified in the monograph, unless specified otherwise.

No test for emitted quantity in each delivery is needed for the preparations that require the test for content of active ingredient in each delivery.

For suspensions for aerosolization and spray intended for inhalation, test for particle size are required.

Particle size Select one aerosol container in random, shake thoroughly, remove the caps and covers, discharge several times to waste, blot the valve, actuate one measured spray onto a clean and dry microscope glass slide which is 5 cm from the mouth of aerosol upright in direction, wash the spray on the slide with about 2 ml of carbon tetrachloride, allow it to dry and place the covered slide on the micrometer stage of the microscope. Examine it under 400 × magnification at a suitable angle and adjust the microscope to see the grid clearly. Count the number of particles within 25 fields of view: most of them are less than 5 μm in effective diameter, not more than 10 particles which are more than 10 μm in effective diameter.

For sprays, spray test and filling are required.

Spray test Select 4 spray containers in random, remove the caps and covers, discharge several times and blot to clean. Weigh individual containers accurately, unless specified otherwise, actuate individual valves five times, blot to clean and weigh accurately each container again. Repeat the foregoing procedures three times. Calculate the average quantity emitted in each delivery, it complies with the requirement stated in individual monographs.

Filling Comply with the test for Minimum Fill (Appendix Ⅻ C).

Sterility Aerosols and sprays used for burn or severe trauma should comply with the requirement stated in the Test for Sterility (Appendix Ⅻ B).

Microbial limit test Unless specified otherwise, comply with the requirements stated under Microbial Limit Tests (Appendix Ⅻ C).

Appendix Ⅱ

Ⅱ A Sampling of Crude Drugs

Sampling of Crude Drugs refers to the method used to sample the crude drugs for examination. The procedure for sampling should be followed in details.

1. Examine the confirmation of the name, source of material, specification and package form of the cargo before sampling. Examine the intactness cleanliness of package and contamination of moulds and foreign matter, make notes in detail. The abnormal packages should be examined separately.

2. The general requirements for sampling of crude drugs in a same consignment are as follows:
when the total number of package is less than 5, the packages are sampled one by one.
5-99 packages, 5 packages are sampled at random; 100-1000 packages, 5% are sampled;
more than 1000 packages, 1% of the part in excess of 1000 packages are sampled;
Precious crude drugs are sampled one by one, regardless of the number of packages.

3. If the material is in crushed or powdered form or in pieces of less than 1 cm in size, at least 2-3 portions of sample are taken by suitable means from different parts in each package. If the volume of package is large, samples taken should be 10 cm in depth below the surface from different parts.
The quantity of samples taken is defined as follows:

Common drugs	100-500 g;
Powdered drugs	25-50 g;
Precious drugs	5-10 g;

As for the drugs of large size or large number, representative samples can be taken on the basis of real situation.

4. Mix the samples thoroughly, i. e. the total quantity of samples taken. If the total quantity of samples taken is several times that required for the testing, take an average sample by quartering, until sufficient quantity of sample is obtained for testing and retention.

5. The quantity or average sample taken should be not less than 3 times of that required for the testing, using one third for analysis, another one third for verification and the remaining as retention which should be kept.

Ⅱ B General Quality Control Method for Crude Drugs

General quality control method for crude drugs includes the "Description", "Identification", "Tests", "Determination of Extractives" and "Assay" of crude drugs. A scheme for the examination of crude drugs is outlined below.

1. Carry out the method for sampling of crude drugs (Appendix Ⅱ A) to take the drugs being examined.

2. Use a reference drug concerned which complies with the requirements specified under individual monograph to verify the result of tests or assays of a crude drug.

3. If the crude drugs being examined are broken, they should comply with the general requirement, except that described under "Description" in the monograph concerned.

4. "Description" consists of the form, size, colour, surface characters, texture (including cut surface or fracture characters) odour and taste.
(1) "Form" refers to the shape of dried crude drugs. In general it is observed without preliminary treatment.
The wrinkled herbs, leaves or flowers can be moistened or softened and spread. As for some fruits and seeds, soften, if necessary, and remove the pericarp or seed coat to examine the inner characters.
(2) "Size" indicates the length, diameter and thickness. In general a number of samples should be measured and a few variations, higher or lower than the defined values, are permitted, using a millimeter ruler. As for the fine seeds, arrange closely 10 seeds in a row, measure with a millimeter ruler and calculate the average value.
(3) The colour and glossiness of crude drugs should be observed under daylight. If the colour is described in a combination of two colours, the main colour is the later one. For example, the main colour is brown in yellowish-brown.
(4) In general, the surface characters, texture and cut surface of the crude drug being examined is observed without preliminary treatment. If the striations of fracture surface is difficult to be observed, it can be cut evenly.
(5) The odour can be examined by smelling directly or after fracturing and rubbing. Sometimes it can be smelled after moistened with hot water.
(6) The flavour can be tasted directly or by tasting the water extract. Precaution should be taken in tasting poisonous drugs.

5. "Identification" indicates the methods for the examination of the identify of crude drugs, consisting of the traditional experiential, microscopic, physical and chemical, spectrographic and chromatographic method.
(1) Experiential identification refers to observe certain characteristics such as the variation of colour, sinking or floating in water, bursting voice and the colour of flame on burning of crude drugs by simple and traditional methods.
(2) Microscopical identification refers to observe the characters of tissues, cells or cell contents in sections or powders or the surfaces of drugs under the microscope. Carry out the method for microscopical identification (Appendix Ⅱ C) by making slide appropriately
(3) Physical and chemical identification refers to test for some constituents in crude drugs by chemical and physical methods.
①Fluorescent identification refers to examine the fluorescenece of fracture or extractive of crude drugs or

examine after the treatment with acid or alkali, at a distance of about 10 cm under ultraviolet light unless specified otherwise, having a maximum output at about 365 nm.
②Microsublimate identification is usually carried out as follows: Place a metallic slide or a glass slide on an asbestos plate with a hole of about 2 cm in diameter and a metallic ring, about 8 mm high, on the slide, just above the hole. Put a thin layer of powdered drugs to be examined in the ring, covered with a glass slide, heat gently under the hole until the powder is charred, then remove the glass slide and allow to cool. Examine the crystal form and colour of sublimate condensed on the slide under a microscope or carry out the appropriate chemical tests on the sublimate.
③spectrographic and chromatographic identification in common use: UV-Vis, IR, TLC, HPLC, GC and so on.

6. Tests refers to limit test for the purity, deleterious or poisonous substance of crude drugs, such as the content of water, ash, foreign matter, poison, heavy metal, deleterious element, the remains of pesticide and so on.

7. Determination of extractive refers to determine the content of soluble substances in crude drugs extracted with water, ethanol or other solvents.

8. Assay refers to examine the efficient, index or sort component of the crude drugs quantatively with chemical, physical or biological methods, including the determination of volatile oils, the content of active principles and potency by biological assay. The common methods are spectrographic, chromatographic identification and so on.

Note (1) If the crude drugs is required to be powdered in assay, pulverize, sift and mix well the crude drug being examined as described under the individual monograph.
(2) Carry out the determination and assay as described in individual monograph or in relevant appendix.

Ⅱ C Microscopical Identification

Microscopical identification is a method with the application of the microscope to identify the characters of tissues, cells or cell contents in sections, powders, disintegrated tissues or surface slides of crude drugs and dosage forms including powders of crude drugs. Representative samples are chosen to be identified and slides are prepared to meet the requirements of identification for each drugs. The slides of patent medicines are made after appropriate treatment with reference to their different dosage forms.

1. Microscopical slides of crude drugs

(1) *Transverse or Longitudinal Sections* Select the observed part of the drug, cut into sections of 10-20 μm in thickness with a razor blade or using sliding microtome after softened. Material may be embedded in hard paraffin before cutting if necessary. Select a flat section on the glass slide, according to different phenomena, treat with glycerol-acetic acid TS, chloral hydrate TS or other test solutions 1-2 drops, and cover the cover glass. If necessary, after treat with chloral hydrate TS, heat until it is transparent, and then treat with glycerol-ethanol TS or diluent glycerol, cover the cover glass.

(2) *Slides of Powder* Spread a small quantity of the powder, through a sieve No. 4, on a slide, and examine after treated with glycerol-acetic acid TS, chloral hydrate TS, or other suitable test solutions, cover the cover glass. Heat until it is transparent as the method above if necessary.

(3) *Slide of Surface* After moistening and softening the materials, cut two parts of about 4 mm^2 of the observed part, place on the glass slide (one for the obverse, the other for the opposite) or tear its epidermis, add suitable test solutions or heat until it is transparent, cover the cover glass.

(4) *Slide of Disintegrated Tissue* The material should be cut into small strips of about 5 mm in length, 2 mm in diameter or pieces of about 1 mm thick before being disintegrated. Potassium hydroxide method can be used if parenchyma makes most part of the material and with a few or scattered woody tissues; chromic-nitric acids method or potassium chlorate method can be used if the material is hard, with the presence of more woody tissues or the woody tissues grouped into larger bundles.

①*Potassium Hydroxide Method* Place the material in a test tube, add an adequate quantity of 5% potassium hydroxide solution, heat until the material can be disintegrated by pressing with a glass rod. Decant the alkali solution and wash the material with water, transfer a little to a slide, tear with dissecting needle, observe using dilute glycerine as mountant and cover the cover glass.

②*Chromic-Nitric Acids Method* Place the material in a test tube, add an adequate quantity of chromic-nitric acid TS, allow to stand until the sample can be disintegrated by pressing with a glass rod. Decant the acid solution, wash with water, prepare a mount as method 1.

③*Potassium Chlorate Method* Place the material in a test tube, add nitric acid solution (1→2) and a little potassium chlorate, heat gently until effervescence relaxes. Add a small quantity of potassium chlorate in time to maintain a light effervescence until the sample can be disintegrated by pressing with a glass rod. Decant the acid solution, wash with water and prepare a mount as method 1.

(5) *Slides of Pollen and Spore* Grind pollens, anthers (or small flowers) or sori (soften the dry material in glacial acetic acid) with a glass rod and filter by carbasus into a centrifugal tube, centrifuge. To the precipitate add 1-3 ml of a freshly prepared mixture of acetic anhydride-sulfuric acid (9∶1), heat on a water bath for 2-3 minutes, centrifuge. Wash the precipitate with water twice, place a little on the glass slide, treat with chloral hydrate TS, cover the cover glass, or add 1-2 drops of 50% glycerin and 1% phenol, mount in fuchsin-glycerin gelatin [gel 1 g, water 6 ml, soak till it is colliquative. Add glycerine 7 ml, heat by gently agitating, until it is mixed well. Add appropriate basic fuchsin solution (basic fuchsin 0.1 g, add absolute alcohol 600 ml and camphor wood oil 80 ml, get it dissolved) after being filtrated onto the culture dish, mix well, and get it after the solidification].

(6) *Slides of ground sections* The method is proper for hard drugs of animals or minerals. Place the tested material of about 1-2 mm in thickness on the coarse grinding stone (or mat-surface glass), add an adequate quantity of water, hold or press the material with the index, middle finger, and abrade it out and home on the grinding stone until either surface is smooth with about several micrometers in thickness. Move the material onto the fine grinding stone, add water, press it with cork before abrading out and home until it is transparent. Rinse with water, treat with ethanol and then prepare a mount with glycerol-ethanol TS.

2. Microscopical slides of preparations including drugs powder

With reference to different dosage form of tested item, take suitable powder directly for powder and capsule (comminute if the content is granular); take the tablet of 2-3 pills, water-paste pill, paste pill, water honeyed pill, pastille (remove

the coating) of several pills or 1-2 troches, pulverize in the mortar and get suitable powder; for honeyed pill, split it and select suitable sample, or get a little precipitate afer removing the honey with water. Prepare a mount as methods for slides of powder (1-5 pills).

3. Identification of Cell Wall

(1) *Lignified Cell Wall* Add 1-2 drops of phloroglucinol TS to the specimen on the slide, allow to stand for a moment, add 1 drop of hydrochloric acid, a red colour or purplish-red colour is produced depending on the extent of lignification.

(2) *Suberized or Cuticutarized Cell Wall* Add Sudan Ⅲ TS as above, allow to stand for a moment or warm gently, an orange-red or red colour is produced.

(3) *Cellulose Cell Wall* Add zinc chloride-iodine TS, or at first add iodine TS to moisten it, allow to stand for a moment, then add sulfuric acid solution (33→50), a blue or purple is produced.

(4) *Siliceous Cell Wall* No change takes place on adding sulfuric acid.

4. Identification of Cell Contents

(1) *starch*
①Add iodine TS, a blue or purple colour is produced.
②Mount in glycerol-acetic acid TS, examine under a polarizing microscope, starch granules show crossed polarized light which disappears in gelatinized granules.

(2) *Aleurone*
① Add iodine TS, a brown or yellowish-brown colour is produced.
②Add mercuric nitrate TS, a brick red colour is produced.
If the material is oily, it should be de-fatted with ether or petroleum ether before being tested.

(3) *Fatty Oil, Volatile Oil or Resin*
①Add Sudan TS, an orange-red, red or purplish-red colour is produced.
②In 90% ethanol, fatty and resin oil is insoluble, except castor oil and croton oil, while volatile oil is soluble.

(4) *Inulin* Add a 10% solution of a-naphthol in ethanol and then add sulfuric acid, the crystals of inulin turn purplish-red and dissolve rapidly.

(5) *Mucilage* Add ruthenium red TS, a red colour is produced.

(6) *Calcium Oxalate Crystals*
① Insoluble in dilute acetic acid, soluble in dilute hydrochloric acid without effervescenece.
②Dissolve gradually in sulfuric acid solution (1→2), but needle crystals of calcium sulfate appear on standing for a moment.

(7) *Calcium Carbonate crystals* (*stalactile*) Soluble in dilute hydrochloric acid with effervescence.

(8) *Silicum* Insoluble in sulfuric acid.

5. Microscopical measure

It refers to measure the size of cells and cell contents in the microscope with ocular micrometer.

(1) *Ocular micrometer* A scaleplate in the eyepiece sleeve of a round glass of 18-20 mm in diameter. In the centre, there is precise parallel-line scale of equal appearing interval, and 50 or 100 panels as usual. (as Fig. 1)

(2) *Stage micrometer* A round glass with fine scale pasted in the centre of specially made glass slide. As usual, divide 1 mm (or 2 mm) precisely into 100 (or 200) panels, and each panel is 10 μm in length to mark the ocular micrometer.

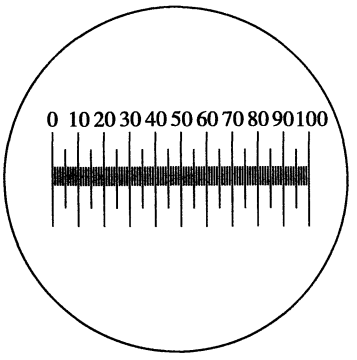

Fig. 1 Ocular micrometer

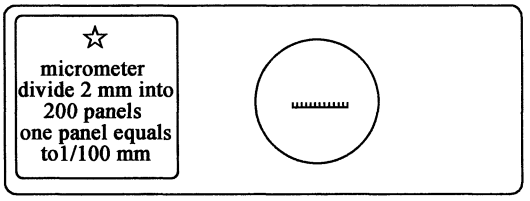

Fig. 2 Stage micrometer

(as Fig. 2)

(3) *Mark of ocular micrometer* Determine the length represented by each panel of ocular micrometer when applying the identical microscope, object glass, ocular glass of definite multiple and body tube of definite length.
Place stage micrometer onto the microscope carrier, and move the scale of it to the centre of visual field in the high-power objective (or low-power objective). Lay up ocular micrometer (the obverse upward) into eyepiece sleeve, turn the ocular micrometer and move the stage micrometer to ensure that the graduation line "0" of ocular micrometer is in coincidence with the certain graduation line of stage micrometer. Find the second coincident graduation line to calculate the corresponding length (μm) represented by each panel of ocular micrometer in the object glass on the basis of the number of the panels of the two micrometers between the two line in coincidence. As shown in Fig. 3, 77 panels (0-77) of ocular micrometer equal to 30 panels (0.7-1.0) of stage micrometer, and the length of each panel of stage micrometer is 10 μm. The length of each panel of ocular micrometer: 10 μm×30÷77=3.8 μm.
Mark respectively during the application of microscopes of different multiples.

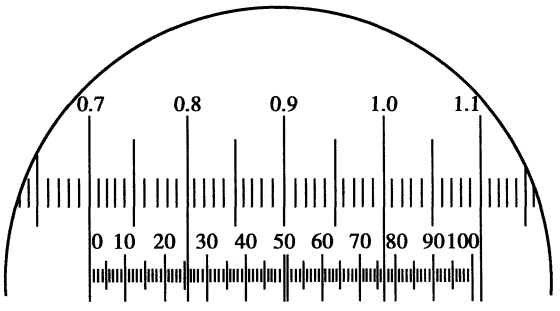

Fig. 3

(4) *Measurements* Lay up the microscopic slide of measured object on the microscope carrier, measure the panel number of the object with ocular micrometer, and multiply the number of μm of each panel as above. Measure by the high power lens as usual except for the measure of longer objects

such as fibre, tube, nonglandular hair by the low power lens. Note the maximum and minimum (μm), and a few values higher or lower than the defined values, are permitted

Ⅱ D The Processing of Crude Drugs

Processing of crude drugs is to make the crude drugs into small processed pieces through processing procedures such as cleaning, cutting and stir-baking, so as to obtain the processed drugs fulfilling the requirements of therapy, dispensing and making preparations thus assuring the safety and efficacy of the drugs.
The water used for processing should be unpolluted drinking water. Unless specified otherwise, the processing should meet the following requirements.

1. Cleaning The crude drugs after cleaning are called "clean crude drugs". Clean crude drugs should be used in cutting, processing, dispensing or compounding.
The crude drugs can be cleansed with the method of sorting, winnowing, washing, sifting, cutting, scraping, paring, rejecting, brushing, rubbing and grinding, cauterizing, soaking, rinsing etc. to reach the quality standard on the basis of specific conditions.

2. Cutting Unless cutted in fresh or dry form, the crude drugs should be moistened to soft for cutting, it is better to keep moisten than to soak in water to prevent the elimination of active principles. The methods for softening: consperging, showering, washing quickly, soaking, moistening, rinsing, parboiling. The crude drugs should be treated separately and appropriately according to their size, diameter and hardness, noting the temperature, quantity of water and duration of treatment. The drugs should be dried in time after cutting.
The crude drugs may be cut into slices, sections, pieces and slivers, etc. Their size, extent and thickness are generally as follows:

Slices: Less than 0.5 mm in thickness for very thin slices, 1-2 mm in thickness for thin slices; more than 2-4 mm in thickness for thick slices.

Sections or segments: 5-10 mm in length for short sections, 10-15 mm in length for long sections.

Pieces: Cubes of 8-12 mm.

Slivers: 2-3 mm in width for microslivers, 5-10 mm in width for thick slivers.
The crude drugs other than those treated by cutting are usually treated by pounding.

3. Roasting and Broiling Unless specified otherwise, the general methods and requirements are as follows.

(1) *Stir-baking* It may be subdivided into simple stir-baking and stir-baking with excipients.
When baking, stir constantly on a homogeneous fire and control the baking temperature, duration and extent of individual drugs.

Simple stir-baking Place clean crude drugs in a pot, stir-bake with gentle heat to the required condition, take them out and cool. For the crude drugs which should be baked to charring, bake at a relatively high temperature until the surfaces of the crude drugs turn brown and the fractures become darkened, then take them out and cool. For the crude drugs inflammable on baking to char, a small amount of water may be sprayed on the crude drugs, then the crude drugs are baked to dryness or dried in the sun.

Stir-baking with bran Put the bran in a hot pot and heat until it smokes, add clean crude drugs to it, stir quickly until the surface of crude drugs turns yellow or dark, then take them out, sift out the bran and cool.
Unless specified otherwise, use 10 kg of bran for each 100 kg of clean crude drugs.

(2) *Scalding* Usually use the clean sand, powdered clam-shell or talc as the excipient for scalding. Put the sand (powdered clam-shell or talc) in a pot, usually heat at a high temperature, add the clean crude drugs, constantly stir until the crude drugs expanded crisply or to a specified extent. Take them out, sift out the sand (powdered clamshell or talc) and cool.
If required to be tempered with vinegar, sift out the excipient, dip the crude drugs into vinegar while hot until they become crisp.

(3) *Calcining* The crude drugs should be calcined until they become crisp and easily crushed.

Calcining openly Crack the clean crude drugs to small pieces, place on smokeless flame or in a suitable container, calcined until the drugs become crisp, brittle or red hot. Take them out, cool and crush to powders.
Drugs of inorganic salts containing water of crystallization need not to be calcined to red hot, but evaporate the water of crystallization completely or calcinate the drugs to honeycomb-like solid masses.

Calcining and quenching Calcine the clean crude drugs to red hot and dip them quickly to a specified liquid to be tempered until they become crisp (repeat the operation, if necessary). Take them out, dry, crushed or powdered.

(4) *Carbonizing* When the crude drugs are carbonized, the nature of the crude drugs should be preserved and prevented from ashing.

Carbonizing by stir-baking Place the clean crude drugs in a hot pot and stir-bake at a high temperature until the surfaces of the drugs darkened and the inner parts turning dark yellow or to a specified condition, spray a small quantity of water, take them out and cool in the air.

Carbonizing by calcining Place the clean crude drugs in a calcining pot, close tightly, braise the crude drugs thoroughly, cool and take them out.

(5) *Steaming* Add the liquid excipient to the clean crude drugs according to the stipulation as described under the individual monograph, mix thoroughly (except simple steaming). Place the mixture into a suitable container, steam thoroughly or appropriately, take out and dry.

(6) *Boiling* Boil the clean crude drugs with water or specified amount of liquid excipient as described under the individual monograph. Take them out when the liquid is absorbed entirely by the drugs or no white spot or core is observed in the centre of the drug on cutting, them dry.
Unless specified otherwise, the remained liquid after boiled with poisonous crude drugs is discarded.

(7) *Stewing* Add the liquid excipient to the clean crude drugs according to the stipulation as described under the individual monograph. Place them into a suitable container, then close tightly, stew them thoroughly on a water bath or by steaming until the liquid is absorbed entirely, cool, take them out and dry.

(8) *Blanching in boiling water* Put the clean crude drugs in boiling water, stir for a short time and take them out. For some seeds, blanch until the wrinkled testa become extended and smooth and can be removed easily. Take them out and soak in cold water to remove the testa and then dry in the sun.

(9) *Processing with wine* It includes stir-baking, stewing and steaming with wine, unless specified otherwise, yellow rice wine is used.

Stir-baking with wine Mix clean crude drugs with wine thoroughly in a closed vessel until it is infused completely. Place the drugs in a pot and roast with gentle neat to a specified condition, take out and cool.
Unless specified otherwise, use 10 kg of yellow rice wine for each 100 kg of clean crude drugs.

Stewing with wine Stew clean crude drugs with wine as described under the method for stewing.

Steaming with wine Steam clean crude drugs with wine as described under the method for steaming.
When stewed or steamed with wine, unless specified otherwise, use 20 kg of yellow rice wine for seeds and 30 kg of yellow rice wine for roots and rhizomes to each 100 kg of clean crude drugs.

(10) *Processing with vinegar* It includes stir-baking, boiling and steaming with vinegar. Rice vinegar or other fermented vinegar should be used in the process.

Stir-baking with vinegar Add vinegar to clean crude drugs and mix thoroughly in a closed vessel until they are infused completely. Place them in a pot and roast to a specified condition, take out and cool.

Boiling with vinegar Boil clean crude drugs with vinegar as described under the method for boiling.

Steaming with vinegar Steam clean crude drugs with vinegar as describe under the method for steaming.
Unless specified otherwise, use 20 kg of vinegar for each 100 kg of clean crude drugs, and, if necessary, dilute with an appropriate quantity of water.

(11) *Processing with salt-water* It includes stir-baking and steaming with salt-water. The salt should be dissolved with an appropriate quantity of water, and filter.

Stir-baking with salt-water Add salt-water to clean crude drugs, mix well in a closed vessel until they are infused thoroughly. Place them in a pot, with gentle heat stir-bake to a specified condition, take out and cool. (for some drugs, add salt-water when stir-baking)

Steaming with salt-water Add salt-water to clean crude drugs and mix well, steam them with salt water as described under the method for steaming.
Unless specified otherwise, use 2 kg of salt for each 100 kg of clean crude drugs.

(12) *Stir-baking with ginger juice* Crush the fresh clean ginger to pasty before processing, then add a quantity of water, press to get juice. Add some more water to the residue and press once more, mix the juices. If dried ginger is used, crush and boil twice with water to get the juice, filtrate, and get the filter liquor.
Add ginger-juice to clean crude drugs and mix well. Stir-bake in a pot with gentle heat until the ginger-juice is absorbed completely or appropriately. Take out and dry in the air.
Unless specified otherwise, use 10 kg of fresh ginger or 3 kg of dry ginger for each 100 kg of clean crude drugs.
Unless specified otherwise, use 10 kg of fresh ginger or 3 kg of dry ginger for each 100 kg of clean crude drugs.

(13) *Stir-baking with honey* The refined honey should be diluted at first with a quantity of boiling water, then add it to clean crude drugs and mix well in a closed vessel until they are infused thoroughly.
Roast them in a pot with gentle heat to a specified condition, take out and cool.
Unless specified otherwise, use 25 kg of refined honey for each 100 kg of clean crude drugs.

(14) *Stir-baking with oil* Heat the sebum oil at first in the vessel to be colliquative, remove the precipitate, add the clean crude drugs and mix well. Roast them with gentle heat until the oil is absorbed completely and the surface of the crude drugs show the oil light. Spread out and cool.

(15) *Frost-like powder* Processed by removal of oil from the crude drugs.
Unless specified otherwise, crush the clean crude drugs to a paste, heat gently, and press out a majority of oil in the crude drugs to make a fairly dispersible powder as required in individual monograph.

(16) *Levigating* Place clean crude drugs in a container. Add a quantity of water to the crude drugs treated according to the stipulation, pulverize to fine powders, then add more water, stir, decant the supernatant suspension. Repeat the operation on the precipitate for several times, remove foreign matter and combine the suspensions. Allow to stand, separate the precipitate, dry and pulverize to fine powder.

(17) *Roast* Wrap up the clean crude drugs with wet flour or wet paper, or place them in uniformity and compartment on the paper of suctioning oil before the process of heating. Or bury the crud drugs in the wheat bran, roast them with gentle heat until the extent required, take out and cool.
Unless specified otherwise, use 50 kg of wheat bran for each 100 kg of clean crude drugs.

Appendix Ⅲ Ingredients of Patent Medicines not Included in the Pharmacopoeia

Some crude drugs and processed drugs used as ingredients in patent medicines are not included in this Pharmacopoeia. Requirements for some crude drugs were promulgated by the health authority of provinces, municipalities or autonomous regions according to the local tradition. The others must comply with the following requirements.

Armadillidium Dried body of *Armadillidium vulgare* (Latreille) (Fam. Armadillididae).

Borax Crystal refined from natural borax.

Bulbus Allii Dried bulb of *Allium sativum* L. (Fam. Liliaceae).

Cacumen Claoxyli Dried young branch of *Claoxylon polot* (*Burm.*) Merr. (Fam. Euphorbiaceae).

Calx Pulveratum A powder mainly containing calcium carbonate.

Camphora Crystal prepared from dried branch, leaf and root of *Cinnamomum camphora* (L.) Sieb. (Fam. Lauraceae).

Carapax Eretmochelydis Shell of *Eretmochelys imbricata* (Linnaeus) (Fam. Cheloniidae).

Caro, Fel et Hepar Caprae seu Ovis Meat, gallbladder and fresh liver of *Capra hircus* Linnaeus or *Ovis aries* Linnaeus (Fam. Bovidae).

Catharsius Dried insect of *Catharsius molossus* Linnaeus (Fam. Scarabaeidae).

Caulis Entadae Dried rattan of *Entada phaseoloides* (L.) Merr. (Fam. Leguminosae).

Caulis et Radix Croton Tiglii Dried root and dried stem of *Croton tiglium* L. (Fam. Euphorbiacceae).

Caulis Gneti Dried rattan of *Gnetum montanum* Markgr. or *Gnetum parvifolium* (Warb.) C. Y. Cheng ex Chun (Fam. Genetaceae).

Caulis Impateintis Balsaminae Dried stem of *Impateins balsamina* L. (Fam. Balsaminaceae).

Caulis Piperis Wallichii Dried stem with leaves of *Piper wallichii* (Miq.) Hand. -Mazz or *Piper puberulum* (Benth.) Maxim. (Fam. Piperaceae).

Caulis Polygoni Aubertii Dried stem of *Polygonum aubertii* Henry (Fam. Polygonaceae).

Caulis Rubi Idaei Dried stem of *Rubus idaeus* L. (Fam. Rosaceae).

Chalcanthitum Minerals mainly containing hydrated copper sulphate.

Compositus Medicatus Fermentatus A processed product fermented by Galla Chinensis and Folium Camelliae Sinensis.

Concentrated Decoction of Fructus Hippophae Wash mature Fructus Hippophae and eliminate foreign matter. Place the fruit in a copper or aluminum pot, add a quantity of water, about 6-10 cm over the drug, heat with vapour or fire to boil for 1-2 hours, decant the decoction. Decoct the residue with water again, combine the decoctions, allow to stand for 12 hours to precipitate, decant the supernatant and filter the solution at the bottom, then concentrate the solution at a high temperature at the beginning, decrease the temperature with the solution concentrated gradually, keep it boil slightly and stir constantly to prevent charring until the concentrated decoction can be raised like sliver or can not seep through paper.

Concentrated Decoction of Dianjixueteng Remove the cork of fresh Dianjixueteng and cut into large pieces. Place them in a pot and add water to over the drug about 6 cm, boil for 5-6 hours by strong heat, filter. Boil the residue with water again for 8-9 hours and filter, combine the filtrates, evaporate in a clean pot by gentle heat until the decoction can be raised like sliver, then cool. The relative density of the concentrated decoction is 1.06-1.08.

Cortex Berberidis Dried root bark of *Berberis soulieana* Schneid. and other species of the same genus (Fam. Berberidaceae).

Cortex Parabarii seu Ecdysantherae Dried stem bark of *Parabarium chunianum* Tsiang, *Parabarium huaitingii* Chun et Tsiang, *Parabarium micranthun* (A. DC.) Pierre or *Ecdysanthera utilis* Hay. et Kaw. (Fam. Apocynaceae).

Cortex Syringae Mandshuricae Dried stem bark or branch bark of *Syringa reticulata* (Bl.) Hara var. *mandshurica* (Maxim.) Hara (Fam. Oleaceae).

Cor Bovis Heart of *Bos taurus domesticus* Gmelin or *Bubalus bubalis* Linnaeus (Fam. Bovidae).

Cupri Carbonas Green rust on the surface of copper, produced by the effect of carbon dioxide or acetic acid, mainly containing basic copper carbonate.

Eriocheir seu Potamon Dried body of *Eriocheir sinensis* H. Miline-Edwards, *Potamon* (*potamon*) *denticulata* or *Potamon* (*Potamon*) *yunanensis* (Fam. Catametopa).

Faeces Bombycis Dried excrements of *Bombyx mori* Linnaeus (Fam. Bombycidae).

Faeces Trogopterori Dried faeces of *Trogopterus xanthipes* Miline-Edwards (Fam. Sciuridae).

Faeces Vespertilionis Dried excrements of *Vespertilio superans* Thomas. (Fam. Vespertilionidae).

Fel Bovis Bile liquid of *Bos taurus domesticus* Gmelin (Fam. Bovidae).

Fel Serpentis Liquidum Bile of many kinds of snake (Fam. Elapidae, Crotalidae, Colubridae). Kill the snake, take out the gallbladder and preserve it in wine containing more than 50% of alcohol, the ratio of the gallbladder and the wine is 1 : 1 (g/g). Remove the membrane of gallbladder before use, take the bile with an equal volume of wine.

Fel Ursi Dried gallbladder of *Selenarctos thibetanus* Cuvier or *Ursus arctos* Linnaeus (Fam. Ursidae).

Flos Gentianae Straminiae Dried flower of *Gentiana straminia*

Maxim. (Fam. Gentianaceae).

Flos Gossampini Dried flower of *Gossampinus malabarica* (DC.) Merr. (Fam. Bombacaceae).

Folium Aconiti Szechenyiani Dried leaf of *Aconitum szechenyianum* Gay. (Fam. Ranunculaceae).

Folium Camelliae Assamicae Leaf of *Camellia sinensis* O. Ktze. var. *assamica* Kitamura (Fam. Theaceae).

Folium Camelliae Sinensis A dried processed product of young leaf of young sprout of *Camellia sinensis* (L.) O. Ktze (Fam. Theaceae).

Folium Glycosmis Dried leaf of *Glycosmis parviflora* (Sims) Kurz (Fam. Rutaceae).

Folium Ilicis Chinensis Dried leaf of *Ilex chinensis* Sims (Fam. Aquifoliaceae).

Folium Pini Massonianae Recens Fresh leaf of *Pinus massoniana* Lamb. (Fam. Pinaceae).

Folium Syringae Dried leaf of *Syringa vulgaris* L., *Syringa dilatata* Nakai or *Syringa oblate* Lindl. (Fam. Oleaceae).

Fossilia Spiriferis Fossil of *Cyrtiospirifer sinensis* (Graban) or *Cyrtiospirifer sp.* (Fam. Spiriferidae).

Fructus Benincasae Dried fruit of *Benincasa hispida* (Thunb.) Cogn. (Fam. Cucurbitaceae).

Fructus Capsici Dried mature fruit of *Capsicum annuum* L. (Fam. Solanaceae).

Fructus Eugeniae Caryophyllatae Dried fruit of *Eugenia caryophyllata* Thunb. (Fam. Myrtaceae).

Fructus Gleditsia sinensis Dried mature fruit of *Gleditsia sinensis* Lam. (Fam. Leguminosae).

Fructus Hordei Dried fruit of *Hordeum vulgare* L. (Fam. Gramineae).

Fructus Punicae Granati Dried fruit of *Punica granatum* L. (Fam. Punicaceae).

Fructus Sapindus Dried mature fruit of *Sapindus mukorossi* Gaertn. (Fam. Sapindaceae).

Fructus Terminaliae Immaturus Dried young fruit of *Terminalia chebula* Retz. or *Terminalia chebula* Retz. var. *tomentella* Kurt. (Fam. Combretaceae).

Fructus Trapae Dried fruit of *Trapa bispinosa* Roxb. or *Trapa maximowiczii* Korsch. (Fam. Claricepitaceae).

Fructus Tritici Dried mature fruit of *Triticum aestivum* L. (Fam. Gramineae).

Fructus Vitis Viniferae Dried fruit of *Vitis vinifera* L. (Fam. Vitaceae).

Gypsum Rubrum seu Calcitum (calcined) Calcine the drug to be white in colour by carrying out the method for calcining and quenching (Appendix Ⅱ D), put into "lada" (defatted milk) until it crisp, take out and pulverize.

Gypsum Rubrum seu Calcitum (processed with milk) Break 1000 g of drug to pieces, add 10 g of potassium nitrate and a quantity of water, boil for 3 hours, decant the liquid, wash with water for 10-15 times until the washing clear, dry in air, pulverize to fine powder, add a quantity of milk, stir to dough shaped, make into round cakes of about 10 cm in diameter and less than 3 cm thick, dry in the shade.

Halitum Crystal of lake salt, mainly containing sodium chloride.

Herba Aconiti Dried herb of *Aconitum naviculare* Stapf or *Aconitum tanguticum* (Maxim.) Stapf (Fam. Ranunculaceae).

Herba Aconiti Kusnezoffii Dried seedling of *Aconitum kusnezoffii* Reichb. (Fam. Ranunculaceae).

Herba Arctii Herb of *Arctium lappa* L. (Fam. Compositae).

Herba Artemisiae Anomalae Dried part of overground of *Artemisia anomala* S. Moore or *Artemisia actiflora* Wall. ex DC. (Fam. Compositae).

Herba Breyniae Dried herb of *Breynia fruticosa* (L.) Hook. f. (Fam. Euphorbiaceae).

Herba Calophylli Dried herb of *Calophyllum membranaceum* Gardn. et Champ. (Fam. Hypercaceae).

Herba Corydalis Bungeanae Dried herb of *Corydalis bungeana* Turcz. (Fam. Papaveraceae).

Herba Corydalis Strictae Dried herb of *Corydalis stricata* Steph. (Fam. Papaveraceae).

Herba Dracocephali Tangutici Dried aerial part of *Dracocephalum tanguticum* Maxim. (Fam. Labiatae).

Herba Ecliptae Liquidum Fresh stem of *Eclipta prostrata* L (Fam. Compositae), add small quantity of water, squeeze and filter.

Herba Euonymusis Dried part overground of *Euonymus fortunei* (Turcz.) Hand. -Mazz., *Euonymus japonicus* L. or *Euonymus subsessilis* Sprague (Fam. Celastraceae).

Herba Gueldenstaedtiae Dried herb of *Gueldenstaedtia verna* (Georgi) A. Bor (Fam. Leguminosae).

Herba Hedyotidis Dried herb of *Hedyotis hedyotidea* DC. (Fam. Rubiaceae).

Herba Hypecoi Dried herb of *Hypecoum leptocarpum* Hook. f. et Thoms (Fam. Papaveraceae).

Herba Hyperici Japonici Dried herb of *Hypericum japonicum* Thunb. (Fam. Guttiferae).

Herba Hyptidis Dried herb of *Hyptis suaveolens* (L.) Poit. (Fam. Labiatae).

Herba Inulae Cappae Dried herb of *Inula cappa* (Buch. Ham.) DC. (Fam. Compositae).

Herba Ixeritis Chinensis Dried herb of *Ixeris chinensis* (Thunb.) Nakai. (Fam. Compositae).

Herba Lagotidis Dried herb of *Lagotis glauca* Gaertn. or *Lagotis brevituba* Maxim. (Fam. Scrophulariaceae).

Herba Lysimachiae Foenum-graeci Dried herb of *Lysimachia foenum graecum* Hance. (Fam. Primulaceae).

Herba Monochasmae Dried herb of *Monochasma savatieri* Franch. ex Maxim. (Fam. Scrophulariaceae).

Herba Oldenlandiae Diffusae Dried herb of *Oldenlandia diffusa* (Willd.) Roxb. (Fam. Rubiaceae).

Herba Oxytropis Dried herb of *Oxytropis chiliophylla* Royle or *Oxytropis falcata* Bge. (Fam. Leguminosae).

Herba Oxytropis Myriophyllae Dried herb of *Oxytropis myriophylla* (Pall.) DC. (Fam. Leguminosae).

Herba Pegaeophyti Dried herb of *Pegaeophyton scapiflora* (Hook. f. et Thoms.) Marq. et Airy-Shaw. (Fam. Cruciferae).

Herba Picriae Dried herb of *Picria felterrae* Lour. (Fam. Scrophulariaceae).

Herba Piperis Sarmentosi Dried part of over ground of *Piper sarmentosum* Roxb. (Fam. Piperaceae).

Herba Pterocephali Dried herb of *Pterocephalus hookeri* (C. B Clarke) Höeck. (Fam. Dipsacaceae).

Herba Saxifragae Tanguticae Dried herb of *Saxifraga tangutica* Engl. (Fam. Saxifragaceae).

Herba Schoepfiae Dried herb of *Schoepfia chinensis* Gardn. et Champ. or *Schoepfia jasminodora* Sieb. et Zucc. (Fam. Olacaceae).

Herba Securidacae Dried herb of *Securidaca inappendiculata* Hassk. (Fam. Polygalaceae).

Herba Senecionis Scandentis Dried part of overground of *Senecio scandens* Buch. -Ham. (Fam. Compositae).

Herba Siphonostegiae Dried herb of *Siphonostegia chinensis* Benth. (Fam. Scrophulariaceae).

Herba Smilacis Ripariae Herb of *Smilax riparia* A. DC. (Fam. Liliaceae).

Holotrichia Diomphalia Dried larva of *Holotrichia diomphalia* Bates or other species of the same genus (Fam. Scarabacidae).

Lac Bovis Milk of *Bos taurus domesticus* Gmelin or *Bubalus bubalis* Linnaeus (Fam. Bovidae).

Lignum Pini Nodi Dried warty node or ramose node of *Pinus tabulaeformis* Carr. or *Pinus massoniana* Lamb. (Fam. Pinaceae).

Lignum Pterocarpi Santalini Wood of *Pterocarpus santalinus* L (Fam. Leguminosae).

Lignum Rubi Wood of *Rubus sp.* (Fam. Rosaceae).

Massa Medicata Fermentata (stir-baked) Cut Massa Medicata Fermentata to small pieces, stir-bake as described under the method for simple stir-baking (Appendix Ⅱ D) until a dark yellow colour develops on the surface.

Massa Pinelliae Fermentata A cake prepared from pinellia tuber, ginger juice, alum, Massa Medicata Fermentata and wheat powder.

Melanteritum Copperas Mineral or chemical products of ferric sulfate, ferrisulfas is main component.

Mirabilitum Preparatum A white crystalline powder prepared from the ripe pericarp of *Citrullus vulgaris* Schrad. (Fam. Cucurbitaceae) and natural sodium sulfate.

Musculus Bungari Dried body of *Bungarus multicinctus* Blyth (Fam. Elapidae), *Agkistrodon strauchii* Bedriaga (Fam. Crotalidae) or *Opheodrys major* (Guenther) (Fam. Colubridae), removed from the head, tail and skin.

Myelencephalon Passeris Montani Brains of *Passer montanus saturatus* Stejneger (Fam. Ploceidae).

Myrrha (processed) (1) Stir the clean Myrrha as described under the method for stir-baking with vinegar (Appendix Ⅱ D) until the surface lustrous. To each 100 kg of Myrrha add 5 kg of vinegar.
(2) Stir-bake the clean Myrrha as described under the method for simple stir-baking (Appendix Ⅱ D) until the surface becomes lustrous.

Olibanum (processed) (1) Stir-bake the clean Olibanum as described under the method for stir-baking with vinegar (Appendix Ⅱ D) until the surface becomes lustrous. To each 100 kg of Olibanum add 5 kg of vinegar.
(2) Stir-bake the clean Olibanum as described under the method for simple stir-baking (Appendix Ⅱ D) until the surface becomes lustrous.

Os Canidis Skeleton of *Canis familiaris* L. (Fam. Canidea).

Os Draconis A skeleton fossils of ancient mammals, such as *Hipparion*, *Rhinoceros*, *Cervus*, *Bos*, *Elephas*, etc, or incisor fossils of *Elephas*.

Os Pardi Dried skeleton of *Panthera pardus* Linnaeus (Fam. Felidae).

Pulvis Cerebri Susis Dried powder of brains of *Sus scrofa domestica* Brisson (Fam. Suidae).

Pulvis Ferri (processed with Fructus Chebulae) Boil 130 g of Cacumen Tamaricis in 100 ml of water for 3 hours, filter, add 500 g of fine iron powder to the filtrate and a quantity of water to macerate it, boil for 3 hours, discard the liquid, wash the residue with water for 3 times, add 50 g of salt and 1000 ml of water, boil for 2 hours, discard the liquid, wash the residue again with water for 4 times, add 2500 g of fine powder of Fructus Chebulae, mix well, add 1800 ml of hot water, stir, stand for 3 days, stir for 3 times a day, take out on the fourth day, spread and dry in the shade, draw out the unreacted iron powder with magnet, pulverize to fine powder, and sift. The drug can not be prepared in summer.

Radix Aconiti Balfourii Dried root of *Aconitum balfourii* Stapf or *Aconitum szechenyianum* Gay (Fam. Ranunculaceae).

Radix Araliae Armatae Dried root of *Aralia armata* (Wall.) Seem. or *Aralia decaisneana* Hance (Fam. Araliaceae).

Radix Ardisiae Crenatae Dried root of *Ardisia crenata* Smis (Fam. Myrsinaceae).

Radix Asparagi Pseudofilicini Dried root of *Asparagus pseudofilicinus* Wang et Tang (Fam. Liliaceae).

Radix Bupleuri Marginati Dried root of *Bupleurum marginatum* Wall. ex DC. (Fam. Umbelliferae).

Radix, Caulis et Folium Crotonis Caudati Dried root, stem and leaf of *Croton caudatus* Geisel. var. *tomentosa* Hook. (Fam. Euphorbiaceae).

Radix Cudraniae Dried root of *Cudrania cochinchensis* (Lour.) Kudo. et Masam. or *Cudrania tricuspidata* (Carr.) Bur. (Fam. Moraceae).

Radix et Caulis Solani Dried root and old stem of *Solanum indicum* L., *Solanum surattense* Burm. f., *Solanum torvum* Swartz. or *Solanum xanthocarpum* Schrad. et Wendl. (Fam. Solanaceae).

Radix et Caulis Solani Melongenae Dried root and stem of *Solanum melongena* L. (Fam. Solanaceae).

Radix et Rhizoma Cinnamomi Camphorae Dried root and rhizome of *Cinnamomum camphora* (L.) Presl or *Cinnamomum porrectum* (Roxb.) Kostern. (Fam. Lauraceae).

Radix et Rhizoma Litseae Dried root or rhizome of *Litsea cubeba* (Lour.) Pers. (Fam. Lauraceae).

Radix et Rhizoma Rhodiolae Dried root and rhizome of *Rhodiola kirilowii* (Regel) Regel (Fam. Crassulaceae).

Radix et Rhizoma Zanthoxyli Dissiti Dried root and stem of *Zanthoxylum dissitum* Hemsl. (Fam. Rutaceae).

Radix Flemingiae Dried radix of *Flemingia philippinensis* Merr. et Rolfe or *Flemingia macrophylla* (Willd.) Merr. (Fam. Leguminosae).

Radix Ilicis Asprellae Dried root of *Ilex asprella* (Hook. et Arn.) Champ. ex Benth. (Fam. Aquifoliaceae).

Radix Ilicis Pubescens Dried root of *Ilex pubescens* Hook. et Arn. (Fam. Aquifoliaceae).

Radix Inulae Cappae Dried root of *Inula cappa* DC. (Fam. Compositae).

Radix Kadsurae Coccineae Dried root of *Kadsura coccinea* (Lem.) A. C. Smith or dried rattan of *Kadsura heteroclite* (Roxb.) Craib. (Fam. Magnoliaceae).

Radix Phlomis Kawaguchii Dried root of *Phlomis kawa-*

guchii Murata (Fam. Labiatae).

Radix Rosae Dried root of *Rosa laevigata* Michx, *Rosa Cymosa* Tratt. or *Rosa multiflora* var. *cathayensis* Rehd. et Wils. (Fam. Rosaceae).

Radix Streptocauli Died root of *Streptocaulon griffithii* Hook. f. (Fam. Asclepiadaceae).

Radix Syringae Pinnatifoliae Dried root of *Syringa pinnatifolia* Hemsl. (Fam. Oleaceae).

Radix Viticis Trifoliae Dried root of *Vitex trifolia* L. var. *simplicifolia* Cham. or *Vitex trifolia* L. (Fam. Verbenaceae).

Ramulus Polygoni Aubertii Dried stem of *Polygonum aubertii* Henry (Fam. Polygonaceae).

Ramulus Pruni Dried young stem of *Prunus persica* (L). Batsch or *Prunus davidiana* (Carr.) Franch. (Fam. Rosaceae).

Ramulus Sambuci Dried stem of *Sambucus racemosa* L. (Fam. Caprifoliaceae).

Ramulus Sophorae Dried young stem of *Sophora japonica* L. (Fam. Leguminosae).

Resina Draconis Dried resin obtained from the fruit and stem of *Daemonorops draco* Bl. (Fam. Palmae).

Rhizoma Acori Calami Dried rhizome of *Acorus calamus* L. (Fam. Araceae).

Rhizoma Begoniae Dried rhizoma of *Begonia crassirostris* Irmsch., *Begonia palmata* D. Don or *Begonia pedatifida* Lévl. (Fam. Begoniaceae).

Rhizoma Dioscoreae Nipponicae Dried rhizome of *Dioscorea nipponica* Makino (Fam. Dioscoreaceae).

Rhizoma Dioscoreae Panthaicae Dried rhizome of *Dioscorea panthaica* Prain et Burkill (Fam. Diosoreaceae).

Rhizoma et Radix Anisochili Dried rhizome with old stem and root of *Anisochilus carnosus* (L.) Wall. (Fam. Labiatae).

Rhizoma Hedychii Rhizome of *Hedychium venustum* Wight (Fam. Zingiberaceae).

Rhizoma Taccae Dried rhizome of *Tacca esquirolii* (Levl.) Rehd. (Fam. Taccaceae).

Sal Ammoniaci Mineral of *Halitum violaceum* mainly containing ammonium chloride.

Saltpetre Crystal refined from natural potassium nitrate.

Semen Cucumis Dried seed of *Cucumis melo* L. (Fam. Cucurbitaceae).

Semen Cynanchi Dried seed of *Cynachum thesioides* (Freyn) K. Schum (Fam. Asclepiadaceae).

Semen Entadae Dried seed of *Entada phaseoloides* (L.) Merr. (Fam. Leguminosae).

Semen Glycinis Germinatus Dried Germinated seed of *Glycine max* (L.) Merr. (Fam. Leguminosae).

Semen Glycinis Dried seed of *Glycine max* (L.) Merr. (Fam. Leguminosae).

Semen Herpetospermi Caudigeri Dried seed of *Herpetospermum caudigerum* Wall. (Fam. Cucurbitaceae).

Semen Hydnocarpi Dried seed of *Hydnocarpus anthelmintica* Pierre (Fam. Flacourtiaceae).

Semen Nigellae Sativae Dried seed of *Nigella sativa* L. (Fam. Ranunculaceae).

Semen Oryzae cum Monasci Fermentatum Hyphae and spores of *Monascus purpureus* Went (Fam. Eurotiaceae) cultivated artificially to make the hyphae grow in the grains of rice and the grains turn red.

Semen Phaseoli Radiati Dried seed of *Phaseolus radiatus* L. (Fam. Leguminosae).

Succinum Obtained by transformation of resin from ancient *Pinus* plants, embeded underground for very long time.

Sumi Sinensis Chinese ink prepared from pine soot, Borneolum Syntheticum, mucilage and perfame.

Tabanus Female insect of *Tabanus bivittatus* Matsumura (Fam. Tabanidae).

Trona A ramified crystal occurring around the salt lake, mainly containing sodium carbonate.

Appendix Ⅳ General Identification Tests

Acetates
(1) Heat a quantity of the substance being examined with sulfuric acid and ethanol; the characteristic odour of ethyl acetate is liberated.
(2) To a neutral solution of the substance being examined add 1 drop of ferric chloride TS; a deep red colour is produced which disappears on addition of dilute mineral acid.

Aluminium Salts
(1) Add sodium hydroxide TS to a solution of the substance being examined; a gelatinous white precipitate appears which is soluble in an excess of sodium hydroxide TS.
(2) Add ammonia TS to a solution of the substance being examined until a gelatinous white precipitate is formed, add a few drops of sodium alizarinsulfonate IS; the precipitate becomes cherry red in colour.

Ammonium Salts
(1) Heat a quantity of the substance being examined with an excess of sodium hydroxide TS; the characteristic odour of ammonia is perceived, the vapour turns moistened red litmus paper to blue and blackens a strip of filter paper moistened with mercurous nitrate TS.
(2) To a solution of the substance being examined add 1 drop of alkaline mercuric potassium iodide TS; a reddish brown precipitate is produced.

Antimony Salts
(1) Acidify a solution of the substance being examined with acetic acid, heat on a water bath and to the hot solution add a few drops of sodium thiosulfate TS; an orange red precipitate is produced gradually.
(2) Acidify a solution of the substance being examined with hydrochloric acid, pass hydrogen sulfide gas into the solution; an orange precipitate, soluble in ammonium sulfide TS or sodium sulfide TS, is produced.

Barium Salts
(1) Moisten the substance being examined with hydrochloric acid on a platinum wire, it imparts a yellowish green colour to a nonluminous flame, or a blue colour when viewed through a green glass plate.
(2) Add dilute sulfuric acid to a solution of the substance being examined; a white precipitate is produced which is insoluble in hydrochloric acid or nitric acid.

Benzoates
(1) Add ferric chloride TS to a neutral solution of the substance being examined; a dull yellow precipitate is formed which turns to white on addition of dilute hydrochloric acid.
(2) Introduce a quantity of the substance being examined into a dry test tube, add sulfuric acid and heat gently; no charring occurs, a white sublimate of benzoic acid is deposited on the inner wall of the test tube.

Bismuth Salts
(1) Add potassium iodide TS to a solution of the substance being examined; a reddish brown colour or dark brown precipitate is produced, the precipitate is soluble in an excess of the reagent, forming a yellowish brown solution. Dilute the solution with water; an orange precipitate is produced.
(2) Acidify a solution of the substance being examined with dilute sulfuric acid, add a quantity of 10% thiourea solution, an intense yellow colour is produced.

Borates
(1) A solution of the substance being examined, acidified with hydrochloric acid, turns turmeric paper to brownish red, the colour deepens on drying and becomes greenish black when moistened with ammonia TS.
(2) Mix a quantity of the substance being examined with sulfuric acid and add methanol, when the mixture is ignited, it burns with a green-bordered flame.

Bromides
(1) Add silver nitrate TS to a solution of the substance being examined; a curdy, pale yellow precipitate is formed which is slightly soluble in ammonia TS and practically insoluble in nitric acid.
(2) Add chlorine TS dropwise to a solution of the substance being examined; bromine is liberated, add chloroform and shake, a yellow to reddish brown colour is developed in the chloroform layer.

Calcium Salts
(1) Moisten the substance being examined with hydrochloric acid on a platinum wire, it imparts a yellowish red colour to a nonluminous flame.
(2) Add 2 drops of methyl red IS to a solution of the substance being examined (1 → 20), neutralize with ammonia TS and then acidify with hydrochloric acid. Add ammonium oxalate TS; a white precipitate is produced which is soluble in hydrochloric acid but insoluble in acetic acid.

Carbonates and Bicarbonates
(1) Add dilute acid to a solution of the substance being examined, it effervesces with the evolution of carbon dioxide, producing a white precipitate when passed into calcium hydroxide TS.
(2) Add magnesium sulfate TS to a solution of the substance being examined; a white precipitate is produced immediately (carbonates) or on boiling (bicarbonates).
(3) A solution of the substance being examined is colourless or only slightly coloured on the addition of phenolphthalein IS (bicarbonates); or an intense red colour is produced (carbonates).

Chlorides
(1) Acidify a solution of the substance being examined with nitric acid and add silver nitrate TS; a curdy, white precipitate is formed which is soluble in ammonia TS and reprecipitated on addition of nitric acid. Organic bases should be removed by the addition of ammonia TS and filtration prior to the test.
(2) Mix a small quantity of the substance being examined with an equal part of manganese dioxide, moisten with sulfuric acid and heat gently; chlorine is evolved which turns a strip of moistened starch-iodide paper to blue.

Citrates
(1) To 2 ml of a solution of the substance being examined equivalent to about 10 mg of citric acid, add a few drops of dilute sulfuric acid and heat to boiling, then add a few drops

of potassium permanganate TS and shake; the violet colour is discharged. Divide the solution into two portions, to one portion add a drop of mercuric sulfate TS, to the other portion add a few drops of bromine TS; a white precipitate is produced in both solutions.
(2) To about 5 mg of the substance being examined add about 5 ml of pyridine-acetic anhydride (3 : 1), shake, a yellow to red or violet-red colour is produced.

Copper Salts
(1) Add a few drops of ammonia TS to a solution of the substance being examined; a light blue precipitate is produced which is soluble in an excess of the reagent, forming a dark blue solution.
(2) Add potassium ferrocyanide TS to a solution of the substance being examined; a reddish brown colour or precipitate is produced.

Ferric Salts
(1) Add potassium ferrocyanide TS to a solution of the substance being examined; a dark blue precipitate is formed which is insoluble in dilute hydrochloric acid, it decomposes to form a brown precipitate on addition of sodium hydroxide TS.
(2) Add ammonium thiocyanate TS to a solution of the substance being examined; a red colour is produced.

Ferrous Salts
(1) Add potassium ferricyanide TS to a solution of the substance being examined; a dark blue precipitate is formed which is insoluble in dilute hydrochloric acid, it decomposes to form a brown precipitate on addition of sodium hydroxide TS.
(2) To a solution of the substance being examined add a few drops of a 1% solution of o-phenanthroline in ethanol; a deep red colour is produced.

Iodides
(1) Add silver nitrate TS to a solution of the substance being examined; a curdy, yellow precipitate is produced which is insoluble in nitric acid or ammonia TS.
(2) Add chlorine TS dropwise to a solution of the substance being examined; iodine is liberated, add chloroform and shake, a violet colour is produced in the chloroform layer; if starch IS is added instead of chloroform, a blue colour is produced.

Lactates
To 5 ml of a solution of the substance being examined equivalent to about 5 mg of lactic acid in a test tube, add 1 ml of bromine TS and 0.5 ml of dilute sulfuric acid. Heat on a water bath with stirring until the colour is discharged, add 4 g of ammonium sulfate and mix well, add dropwise along the inner wall of the tube 0.2 ml of a 10% solution of sodium nitroprusside in dilute sulfuric acid and 1 ml of concentrated ammonia TS, allow to stand for 30 minutes without mixing; a dark green ring is developed at the interface of the two layers.

Lithium salts
(1) Alkalize the solution of the substance being examined with sodium hydroxide TS, add sodium carbonate TS, a white precipitate is produced on boiling which is soluble in ammonium chloride TS.
(2) Moisten the substance being examined with hydrochloric acid on a platinum wire, it imparts a crimson colour to a nonluminous flame.
(3) To a quantity of the substance being examined add dilute sulfuric acid or soluble sulfates solution, no precipitate is produced (distinction from strontium).

Magnesium Salts
(1) Add ammonia TS to a solution of the substance being examined; a white precipitate is produced which redissolves on addition of ammonium chloride TS. Add 1 drop of disodium hydrogen phosphate TS and shake; a white precipitate insoluble in ammonia TS is produced.
(2) Add sodium hydroxide TS to a solution of the substance being examined; a white precipitate is produced which is insoluble in an excess of the reagent, filter, the precipitate is coloured reddish brown on addition of iodine TS.

Malonylureas
(1) Dissolve about 0.1 g of the substance being examined in 1 ml of sodium carbonate TS and 10 ml of water, shake for 2 minutes and filter. To the filtrate add a few drops of silver nitrate TS; a white precipitate is produced which redissolves on shaking, but it is insoluble in an excess of the reagent.
(2) Dissolve about 50 mg of the substance being examined in 5 ml of pyridine solution (1→10), add 1 ml of copper pyridine TS; a violet colour or precipitate is produced.

Mercuric Salts
(1) Add sodium hydroxide TS to a solution of the substance being examined; a yellow precipitate is produced.
(2) Add potassium iodide TS to a neutral solution of the substance being examined; a scarlet precipitate is produced which is soluble in an excess of the reagent. To the solution add sodium hydroxide TS and an ammonium salt; a reddish brown precipitate is produced.

Mercurous Salts
(1) To a quantity of the substance being examined add ammonia TS or sodium hydroxide TS; a black colour is developed.
(2) To a quantity of the substance being examined add potassium iodide TS and shake; a yellowish green precipitate is produced, changing to greyish green rapidly and then to greyish black gradually.

Nitrates
(1) Mix cautiously a solution of the substance being examined with an equal volume of sulfuric acid and allow to cool, add ferrous sulfate TS along the inner wall of the test tube; a brown ring is developed at the interface of the two layers.
(2) To a solution of the substance being examined add cautiously sulfuric acid and metallic copper; a reddish brown fume is evolved on heating.
(3) Add dropwise potassium permanganate TS to a solution of the substance being examined; the violet colour does not disappear (distinction from nitrites).

Organic Fluorinated Compounds
Weigh about 7 mg of the substance being examined, carry out the method for oxygen flask combustion (Appendix Ⅶ C), using 20 ml of water and 6.5 ml of sodium hydroxide solution (0.01 mol/L) as the absorbing liquid. To 2 ml of the resulting solution add 0.5 ml of alizarin fluorine blue TS and 0.2 ml of a solution containing 12% of sodium acetate in dilute acetic acid, dilute with water to 4 ml and add 0.5 ml of cerous nitrate TS; a bluish violet colour is produced. Perform a blank determination in the same manner.

Phosphates
(1) Add silver nitrate TS to a neutral solution of the substance being examined; a light yellow precipitate is formed which is soluble in ammonia TS or dilute nitric acid.
(2) Add magnesium ammonium chloride TS to a solution of the substance being examined; a white crystalline precipitate is produced.
(3) To a solution of the substance being examined add ammonium molybdate TS and nitric acid; a yellow precipitate soluble in ammonia TS is produced on heating.

Potassium Salts
(1) Moisten the substance being examined with hydrochloric acid on a platinum wire, it imparts a violet colour to a

nonluminous flame. If sodium is also present, the yellow colour can be screened out by viewing through a cobalt glass plate.
(2) Ignite the substance being examined to remove any ammonium salt contaminated, cool, dissolve it in water, add acetic acid and a 0.1% solution of sodium tetraphenylborate; a white precipitate is produced.

Primary Aromatic Amines
To about 50 mg of the substance being examined add 1 ml of dilute hydrochloric acid and boil gently to effect dissolution if necessary, cool, add a few drops of sodium nitrite solution (0.1 mol/L) and alkaline 2-naphthol TS; a precipitate coloured from orange yellow to scarlet is formed depending on the identity of the substance being examined.

Salicylates
(1) To a dilute solution of the substance being examined add 1 drop of ferric chloride TS; a violet colour is produced.
(2) Add dilute hydrochloric acid to a solution of the substance being examined; a white precipitate of salicylic acid is produced which is soluble in ammonium acetate TS.

Silver Salts
(1) Add dilute hydrochloric acid to a solution of the substance being examined; a curdy, white precipitate is produced which is soluble in ammonia TS and reprecipitated on addition of nitric acid.
(2) Add potassium chromate TS to a solution of the substance being examined; a brick red precipitate is produced which is soluble in nitric acid.

Sodium Salts
(1) Moisten the substance being examined with hydrochloric acid on a platinum wire; it imparts an intense yellow colour to a nonluminous flame.
(2) Add zinc uranyl acetate TS to a neutral solution of the substance being examined; a yellow precipitate is produced.

Stannous salts
One drop of an aqueous solution of the substance being examined turns ammonium molybdophosphate test paper to blue.

Sulfates
(1) Add barium chloride TS to a solution of the substance being examined; a white precipitate is formed which is insoluble in hydrochloric acid or nitric acid.
(2) Add lead acetate TS to a solution of the substance being examined; a white precipitate is formed which is soluble in ammonium acetate TS or sodium hydroxide TS.
(3) Add hydrochloric acid to a solution of the substance being examined; no white precipitate is produced (distinction from thiosulphates).

Sulfites and Bisulfites
(1) Add hydrochloric acid to the substance being examined; the pungent odour of sulfur dioxide is perceived, the vapour blackens a strip of filter paper moistened with mercurous nitrate TS.
(2) Add iodine TS dropwise to a solution of the substance being examined; the colour of iodine is discharged.

Tartrates
(1) To a neutral solution of the substance being examined in a clean test tube, add a few drops of ammoniacal silver nitrate TS and heat in a water bath; silver is deposited on the inner wall of the test tube as a mirror.
(2) Acidify a solution of the substance being examined with acetic acid, add 1 drop of ferrous sulfate TS and 1 drop of hydrogen peroxide TS, make the solution alkaline with sodium hydroxide TS when the colour is discharged; a violet colour is produced.

Tropane Alkaloids
To about 10 mg of the substance being examined add 5 drops of fuming nitric acid, evaporate to dryness on a water bath, a yellow residue is obtained. Cool, moisten the residue with 2-3 drops of ethanol, add a small pellet of potassium hydroxide; an intense violet colour is produced.

Zinc Salts
(1) Add potassium ferrocyanide TS to a solution of the substance being examined; a white precipitate is formed which is insoluble in dilute hydrochloric acid.
(2) Acidify a solution of the substance being examined with dilute sulfuric acid, add 1 drop of 0.1% copper sulfate solution and a few drops of mercuric ammonium thiocyanate TS; a violet precipitate is produced.

Appendix Ⅴ Spectrophotometry

Spectrophotometry is a method used in qualitative and quantitative analysis in which the light absorption of the substance being examined is measured at a definite wavelength or within a definite range of wavelength.

The spectral ranges involved in pharmaceutical analysis mainly consist of 3 regions: (1) the ultraviolet region 200-400 nm, (2) the visible region 400-760 nm and (3) the infrared region 2.5-25 μm (or 4000-400 cm^{-1}). The instrument should be regularly calibrated to keep the precision and accuraly of determination.

When monochromatic radiation passes through an absorbing medium, the absorbance of the radiation is proportional to the concentration of the absorbing substance and the thickness of the absorbing medium, this relation is expressed by the following equation:

$$A=\lg 1/T=ECL$$

Where A is the absorbance, T is the transmittance, E is the absorption coefficient, denoted by $E^{1\%}_{1\,cm}$, it is the absorbance of 1% solution in a 1 cm cell. C is the concentration of the substance expressed in g per 100 ml, calculated on the dried or dehydrated basis and L is the absorption path length expressed in cm. The term A (1%, 1 cm) is used in this pharmacopoeia to denote the absorbance of a 1% solution in a 1 cm cell.

The wavelength of the selective absorption and the corresponding absorption coefficient are physical constants of the substance being examined. When the absorption coefficient of a pure substance is known, the content of the substance can be calculated by determining the absorbance of the solutions made in the same conditions and using the formula above. In the visible region, the content of a colourless substance can be determined colourimetrically after the addition of a colour developing agent or any other treatment, so it is also called colourimetric analysis.

Ⅴ A Ultraviolet Spectrophotometry and Colourimetry

Calibration and performance test of the instrument

1. *Wavelength* The change of envionment factors may affect the mechanical parts of the spectrophotometer and cause a drift of the wavelength scale, therefore it must be calibrated regularly and immediately before the measurement. Mercury lamp is the best choice of light source for this purpose, the following spectral lines of the mercury lamp can be used: 237.83 nm, 253.65 nm, 275.28 nm, 296.73 nm, 313.16 nm, 334.15 nm, 365.02 nm, 404.66 nm, 435.83 nm, 546.07 nm and 576.96 nm. The wavelength scale may also be calibrated by means of the 486.02 nm and 656.10 nm lines of deuterium discharge lamp. Holmium glass filter exhibits sharp absorption peaks at 279.4 nm, 287.5 nm, 333.7 nm, 360.9 nm, 418.5 nm, 460.0 nm, 484.5 nm, 536.2 nm and 637.5 nm therefore can be used for calibration of wavelength. However, the exact values for the position of these peaks may differ slightly depending on the commercial source of the filter or time.

2. *Accuracy of absorbance* The absorbance scale may be checked with a solution of potassium dichromate in sulfuric acid. Dissolve about 60 mg of potassium dichromate primary standard, previously dried to constant weight at 120℃ and accurately weighed, in 0.005 mol/L sulfuric acid solution to make 1000 ml, Measure and calculate the absorbance coefficient at the specific wavelength, then compare with the specific absorption coefficient. The absorption coefficient should accord with the table below.

Wavelength/nm	235(min)	257	313	350(max)
Absorbance $E^{1\%}_{1\,cm}$	124.5	144.0	48.6	106.6
Normalized absorbance and maximum tolerance $E^{1\%}_{1\,cm}$	123.0-126.0	142.8-146.2	47.0-50.3	105.5-108.5

3. *Check of stray light* The solutions are made according to the reagents and concentrations listed below. The transmittance of these solutions measured in a 1 cm quartz cell against water at the specific wavelength should follow the table below.

Reagent	Concentration/% (g/ml)	Wavelength/nm	Transmittance/%
Sodium Iodide	1.00	220	<0.8
Sodium Nitrite	5.00	340	<0.8

Requirements for the solvents

The organic solvents containing heteroatoms, usually have very strong end absorption. Therefore, when used as solvents, their serviceable range can not be smaller than the cut-off wavelength. For instance, the cut-off wavelength of methanol and ethanol are 205 nm. Also, if the solvent is impure, it may increase the interfere absorption. Therefore, the solvent used in spectrophotometric determinations should be checked for any interfering absorption peak around the selected wavelength for the measurement of the absorbance being examined, namely the absorbance of solvent in a 1 cm quartz cell with air as blank (namely nothing in the light way) is determined. The absorbance of a solvent should not exceed 0.40 in the range of 220 nm to 240 nm, 0.20 in the range of 241 nm to 250 nm, 0.10 in the range of 251 nm to 300 nm and 0.05 at wavelengths above 300 nm, when measured in a 1 cm quartz cell against air.

Procedure

Unless specified otherwise, the same batch of solvent used to prepare the solution of the substance being examined should be employed as the blank in matched 1 cm quartz cells. The wavelength of maximum absorption should be checked by measuring the absorbance of the substance being examined in the vicinity of the specified wavelength, within a range of ±2 nm, to check the wavelength of the absorption

maximum is correct or not. Unless specified otherwise, the absorption maximum must be within ±2 nm as specified in the monograph. When the absorbance reading of the solutions being examined is 0.3 to 0.7, the experimental error is the smallest. The width of the spectral slit must be smaller than one tenth of the half-width of the absorption band, otherwise low absorbance will be resulted. The slit width is appropriate if further reduction does not result in an increase of the absorbance reading. The absorbance of an unmatched cell with the solvent concerned as a blank must be subtracted from the absorbance of the substance being examined or automatically substracted by the instrument.
When the pH of the solution has effect on the determined results, the pH of the solution of the substance being examined should accord with that of CRS.

1. *Identification and quality tests* Ultraviolet spectrophotometry used for identification and quality tests is proceeded according to the method described in the items specified under the corresponding monograph.

2. *Determination of the content* Ultraviolet spectrophotometry is used for assay usually as the following methods.

(1) *Reference substance comparison method* Prepare separately solutions of the substance being examined and CRS according to the method described under items of the individual monograph. The content of the CRS in the solution should be within 100%±10% of the labelled amount of the solution prepared with substance being examined and with solvent of the same batch. Determine the absorbances of solutions of test preparation and of reference preparation at specified wavelength, calculate the concentration of the test preparation in the solution according to the following equation:

$$C_x=(A_x/A_R)C_R$$

Where C_x is the concentration of the test preparation; A_x is the absorbance of the test preparation; C_R is the concentration of the reference preparation and A_R is the absorbance of the reference preparation.

(2) *Absorption coefficient method* Prepare the solutions of the substance being examined according to the method described under the individual monograph, determine the absorbance at specified wavelength. The concentration of the test preparation is determined by calculate with the absorption coefficient specified in the monograph concerned. When using this method, the absorption coefficient should usually be larger than 100 and the instrument should regularly be calibrated and checked.

(3) *Colourimetry* Determine the absorption after revealing by adding suitable colour-developing agent in the solution of the substance being examined and determine its content. This method is called colourimetry.
Colourimetry determination should be carried out with a reference substance concomitantly. An equal volume of solvent, added with the same reagent and treated in the same way is used as blank. Examine the absorption of the solutions at different specific wavelength. A curve should be produced by plotting the absorbance against concentration. The concentration of the test preparation can be determined by interpolating its absorbance on the curve.
The reference solution and the solution being examined can be operated simultaneously. After colour-developing, examine both of their absorptions at the specific wavelength, using suitable reagent as blank. Calculate the concentration of the solution being examined as method (1) described above.
Unless specified otherwise, the blank used in this colourimetry method is the substrate using an equal volume of solvent for the reference of the solution being examined, then in turn relative magents with equal quantity are added, then treated with the same method.

Ⅴ C Infrared Spectrophotometry

Calibration and performance test of the instrument
Fourier-transform infrared spectrophotometers or dispersive infrared spectrophotometers are often used for pharmaceutical analysis. The wave-number scale of an infrared spectrophotometer may be calibrated by using a polystyrene film of 0.04 mm thickness. The absorption peaks at 3027 cm^{-1}, 2851 cm^{-1}, 1601 cm^{-1}, 1028 cm^{-1} and 907 cm^{-1} are used for the calibration of the wave-number.
The error of the wave-number of the Fourier transform infrared spectrophotometers at about 3000 cm^{-1} should be not more than ±5 cm^{-1}, at about 1000 cm^{-1} should be not more than ±1 cm^{-1}.
The resolution of the instrument between 3110-2850 cm^{-1} requires that seven peaks should be clearly isolated, the depth of the trough from the maximum absorption at about 1583 cm^{-1} to the minimum at about 1589 cm^{-1} should be not less than 12% transmittance and that from the maximum at about 2851 cm^{-1} to the minimum at about 2924 cm^{-1} should be not less than 18% transmittance. Unless specified otherwise, the labelled resolution of the instrument should not be less than 2 cm^{-1}.

Preparation and test of the substance being examined

1. *Identification of the raw drugs* Unless specified otherwise, for the identification test the substance being examined must be prepared according to the method described in "Atlas of Infrared spectra of Drugs" (in each volume), edited by Chinese Pharmacopoeia Commission.

2. *Identification of the preparations* When the method is used for identification, the treatment should be clearly specified in the text of the monograph.
If auxiliary materials do not have interfere, after treatment, contrast directly with the standard spectrum of the raw drugs. If auxiliary materials still have different degrees of interfere, referring to the standard spectrum of the raw drugs, select 3 to 5 characteristic absorption peaks of the component being examined in the fingerprint region where the auxiliary materials do not have interfere. List the locations of wave-number as the references of identification, the error of wave-number of the measured spectral band should be less than 0.5% of that of the specified wave-number.

3. *Limit or content examination of the crystals and isomers* The method of sample preparation and determination is performed according to the procedure in the individual monograph.

Notices:

1. In the monograph where infrared absorption spectrum is concordant with the reference spectrum refers to the spectrum specified in the above "Atlas of Infrared Spectra of Drugs". (Vol. Ⅰ. 1995 Ed, Vol. Ⅱ. 2000 Ed, Vol. Ⅲ 2005 Ed) If the spectrum of one compound is referred in different editions, refer to that of the latest.

2. The spectrum of a solid substance may be different from the reference spectrum due to polymorphism. In this case, the substance being examined should be pre-treated according to the method described under individual spectrum of the Atlas. or the method described in the specified monograph.

If the crystal form of the drug and the suitable pre-treatment method are not specified, reference substances can be used. In the same conditions, recrystallize the substance being examined and reference substance using suitable solvents. Then examine as the specified method. If the crystal form of the drug is specified, examine the reference substance which has the corresponding crystal form of the drug.

3. Several factors such as difference in instrument performance of various models, inadequate or successive grinding in preparation of the disc, moisture in the sample or halide carrier, may give rise to unsatisfactory spectrum in shape. It should be kept in mind during the comparison with the reference spectrum.

Ⅴ D Atomic Absorption Spectrophotometry

The object being examined of the atomic absorption spectrophotometry is the metallic atoms and some of the nonmetallic atoms which are in the state of atom.

The light of characteristic wavelength emitted from a lamp with the element to be examined is absorbed when it passes through the sample vapor of the atom generated from the nebulizer-burning containing the element being examined atomized to the ground state. Atomic absorption obeys the general rule for absorption spectrophotometry. The assay is carried out by comparing the absorbance of the test preparation with that of the reference preparation.

General demand for the instrument

The instrument is an atomic absorption spectrophotometer, which consists of a light source, a nebulizer-burner or furnace system, a monochromator and detector system. There are also background correction system, automatic sampling system, etc.

1. *Light source* Commonly use the hollow cathode lamp of which the target element is cathode.

2. *Atomizer* Mainly four styles: flame atomizer, graphite furnace atomizer, hydride producing atomizer and cold steam producing atomizer.

1) *Flame atomizer* Mainly contains nebulizer and combustion lamp. It makes the analyte into aerosol, then mixes it with combustion gas, puts the mixture into the flame of combustion lamp to dry, evaporate and dissociate the analyte, so that the target element will appear as ground state atoms. The flame could be made up with several kinds of mixed gas. Ethyne-air flame is commonly used. By changing the proportion of combustion gas and combustion-supporting gas, the temperature of the flame can be controlled and a better stability of the flame and a better sensitivity can be attained.

2) *Graphite furnace atomizer* Mainly contains galvanothermy graphite furnace and power supply. It can dry and incinerate the analyte and then let the target element be ground state atoms. Commonly the graphite is used as heating unit. Shielding gas usually be used to be resistant to oxidation and transport the analyte.

3) *Hydride generating atomizer* Mainly contains a hydride generator and an atomic absorption cell. It can be used to measure the elements, such as arsenic, selenium, stannum and stibium, etc. It deoxidizes the target element in acid medium to hydride which has low boiling point and is easy to decompose when heating. Then with the help of carrier gas, the hydride will be put into the atomic absorption cell which is made up with silica tube and heater. The hydride will be heated to decompose and appear as ground state atoms.

4) *Cold steam generating atomizer* Mainly contains mercurial vapor producer and atomic absorption cell and only used to measure mercurial. It deoxidizes the mercury ion in the analyte to mercurial vapor, then puts the vapor into the silica atomic absorption cell and measures.

3. *Monochromator* It separates a specified wavelength light from the light emitted from the light source. The instrument should provide a good spectral resolution and the ability to work well in quite narrow spectral bandwidth (0.2 nm). The commonly used wavelength region is 190-900 nm.

4. *Detection system* Mainly contains detector, signal treater and indicating recorder. It should provide a fine sensitivity, good stability and a short response time.

5. *Background correction system* It can correct the disturbance of relative adsorption in the atomize of the analyte. Four styles are commonly used: continuum source (deuterium lamp is commonly used for ultraviolet region), raman effect, spontaneous imbibition and non-adsorption effects.

In the analysis of atomic absorption, the disturbance of the background and other matters should be paid attention to. Changes of some of the working conditions (such as wavelength, split width, atomize conditions) may attect the sensitivity, stability and disturbance. We can select an appropriate spectral line and split width to measure. We can also change the flame temperature, add complexing agent or releasing agent and use the standard addition method to reduce the disturbance. In the graphite furnace method can use feasible background correction system or add matrix modifier to reduce the disturbance. The particular method should be selected by the prescription in the specified monograph.

Determination method

Method 1 (*Standard curve method*) Prepare not less than 3 reference solutions of the element being examined of different concentrations, covering the range recommended by the manufacturer of the instrument and add seperately the corresponding reagents as that for the test preparation. Examine the blank reference solution and the reference solutions of different concentrations in turn, note the absorption value. Prepare a calibration curve by plotting the mean value of each group of 3 readings against the concentration.

Prepare a test solution of the substance being examined as specified in the monograph, adjust the concentration to fall within the concentration range of the reference solution. Examine the absorption 3 times, record the readings and calculate the average value, wash the apparatus with deionized water after each spraying. Interpolate the mean

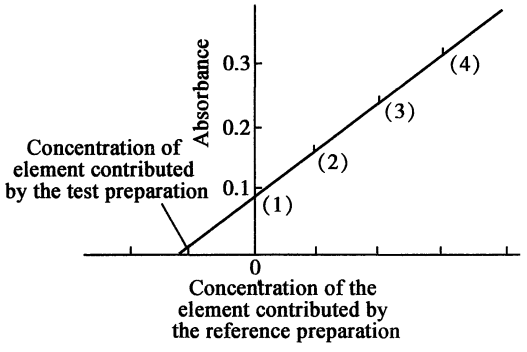

Fig. 4 Concentration of the element contributed by the reference preparation

value of the readings on the calibration curve to determine the concentration of the element.

Method 2 (*Internal standard method*) Place equal volumes of the test preparation in each of 4 volumetric flasks of the same size, to each of the flasks, except the first one, add an accurately measured amount of the reference preparation containing different concentrations of the element being determined. Dilute with de-ionized water to the volume and proceed as directed in the direct calibration method examine, determine and note the absorption value. Plot the mean values of each group of 3 readings against the corresponding concentration of the element contributed by the reference preparation, extrapolate the straight line to intersect with the axis of zero absorbance. The interception represents the concentration of calculate the content of the element in the test preparation. This method is only suitable for the circs, when the standard curve is linear and passes the originpoint the element contributed by the test preparation. (as Fig. 4)

Appendix Ⅵ Chromatography

Depending on the mechanism of the separation process, chromatographic methods can be classified into adsorption chromatography method, partition chromatography method, ion-exchange chromatography method, size-exclusion chromatography method etc.

Adsorption chromatography is based on the different affinity of individual components to the adsorbent (stationary phase), so that they can be eluted successively with a solvent or gas (mobile phase). The adsorbents commonly used are aluminum oxide, silica gel, polyamide powder etc.

Partition chromatography is based on the distribution of individual components between two phases. The stationary phase is coated on or chemically bonded to a solid support of large surface area. The mobile phase is a liquid or a gas. The supports commonly used are silica gel, kieselguhr, diatomaceous earth, cellulose powder, polymers with suitable functional grounds etc.

In ion-exchange chromatography, the stationary phase is either a cation exchange resin or an anion exchange resin. The mobile phase is usually an aqueous buffer solution, sometimes a definite quantity of organic solvent is added to modify the exchange property.

Size exclusion chromatography is also known as gel permeation chromatography or gel filtration chromatography. It is based on the different permeability of components of different molecular size into a support of definite pore size. Molecular sieves, cross-linked polystyrene gels, glucosan gels, silica gel and porous glass beads are commonly used as the stationary phase. Water or organic solvent is used as the mobile phase, depending on the chemical characteristics of the support and the substance being examined.

Chromatography may be classified into paper chromatography, thin layer chromatography, column chromatography, gas chromatography, high performance liquid chromatography and so on based on the method of separation.

Solvents used in chromatography must be of high purity and must not react with the substance being examined. Except gas chromatography, the operation is carried out at room temperature, unless otherwise specified. In column chromatography, paper chromatography and thin layer chromatography, the coloured zones can be detected visually, colourless substances can be detected under ultraviolet radiation of 254 nm or 365 nm. In paper chromatography or thin layer chromatography, colourless substances can also be detected by spraying with a colour-developing agent. Silica gel plates containing a fluorescent substance are sometimes used in thin-layer chromatography, so that colourless substance can be detected by the fluorescence quenching method. In column chromatography, gas chromatography and high performance liquid chromatography, the components can be detected by a suitable detector connected to the outlet of the column. In column chromatography, the components sometimes can be determined quantitatively by a suitable method after fractionation.

Ⅵ A Paper Chromatography

Paper chromatography is a partition chromatographic technique, in which paper in used as a support and the water or other substance contained in the paper is used as a stationary phase.

The substance being examined is developed by the mobile phase, after which the shift ratio value (R_f) could be used to denote the location of each component (R_f is the ratio of the distance between the center of the origin and that of the spots to the distance botween the center of the origin and the frontal of the mobile phase). In practice, R_f values may vary considerably due to experimental conditions. Therefore, the identification of a compound is usually carried out by comparing the behaviour of the compound to be identified with that of a reference substance under the same conditions. For drug identification, the position and colour (or fluorescence) of the main spots of the substance being examinod on the chromatogram should be identical with those of the reference substances. For purity inspection, the number or colour intensity (or fluorescence intensity) of the impurities contained should be examined according to the reguirements specified under each monograph, after a certain amount of substance being examined has been developed. For assay, the main chromatographic spot could be cut out from the paper, eluted with a solvent and subjected to a suitable measurement.

1. Apparatus and Materials

(1) *Developing chamber* It is usually a glass chamber, cylindrical or rectangular, which could be tightly closed with a glass lid. When it is used for descending method, a separator could be inserted through the lid with a hole on it for the addition of the mobile phase. A solvent trough supported by a rack is placed inside near the top of the chamber, a glass rod is used for holding the chromatographic paper, on both sides of the trough, there are two glass rods used to guide the paper so that no part of it is in contact with the wall of the trough. When it is used for ascending method, the hole on the lid is blocked by a stopper with a glass hook where the paper is suspended. The hook is capable of being lowered without opening the chamber. Remove the trough and rack.

(2) *Sample applicator* Microsyringe or capillary tubes with a rack are often used, which could ensure a correct and compact position of the applicated spot.

(3) *Chromatographic filter paper* Filter paper should be clean and uniform in texture and thickness and has a tensile strength. It should contain no impurities which may affect developing process or react with visualizing reagent employed, and affect the separation or identification. It may be pretreated before use if necessary. For descending method, cut a piece of filter paper along the grain direction

into strips of sufficient length and a convenient width, and draw a fine pencil line horizontally across the paper at such a distance from one end to make the line a few centimeters below the guide rod. When this end is secured in the solvent trough and the remainder of the paper is hanging freely outside the trough. The lower end of the paper may be cut into saw-toothed form to facilitate the mobile phase to drop down homogeneously, if necessary. For ascending method, the length of the paper is about 25 cm, the width of the paper is varied as required. Sometimes the paper can be rolled into cylindrical form to save space, the spotting line is about 2.5 cm from the lower edge of the paper.

2. Procedure

(1) *Descending method* Dissolve the substance being examined in a suitable solvent or solvent mixture to prepare a solution of specified concentration. Apply the solution in portions to the pencil line, allow it to dry in air or in a stream of warm air before the next application. The spots are commonly 2-4 mm in diameter, and spaced about 1.5-2.0 cm apart from each other in circular shape. Place the spotted end of paper in the solvent trough and hang the paper freely over the guide rod. Put a Petri dish containing the specified solvent or a strip of chromatographic filter paper moistened with the specified solvent into the chromatographic chamber to pre-equilibrate the chamber with the vapour of the specified solvent. Introduce a sufficient quantity of the mobile phase into the solvent trough and allow it to move along the chromatographic paper for the prescribed distance. Remove the chromatographic paper from the chromatographic chamber, mark the position of the solvent frontal and visualize the chromatogram prescribed in the monograph when the solvent is volatilized.

(2) *Ascending method* The solution of substance being examined is applied on the pencil line as directed in the descending method. The chamber is saturated with the vapour of a specified solvent or the developer placed in it. Lower the hook so that the paper is immersed in the developer to a depth of 0.5 cm, allow the mobile phase to ascend for about 15 cm, unless specified otherwise. Remove the paper from the chamber, mark the position of the solvent frontal and visualize the chromatogram as prescribed in the monograph when the solvent is volatilized.

One dimensional chromatography is that the development proceeds along one direction. Sometimes two-dimensional chromatography may be performed by turning the filter paper at right angle and then continue the development with the original developer or a different solvent system. Other chromatographic techniques, such as multiple development, continuous development and wedge shaped strip development etc., may also be used.

Ⅵ B Thin-Layer Chromatography

The thin-layer chromatography (TLC) is a separation technique in which test solutions are deposited in a uniform thin layer on a support (plate) and developed by the mobile phase in a chromatographic chamber to separate the components of the substance being examined. The chromatogram thus obtained is then compared with that obtained in the same way of the suitable reference solutions. The Thin-layer Scanning instrument can be further used for identification, inspection and assay.

1. Apparatus and Materials

(1) *Plates*

Pre-coated plates The pre-coated plates fall into two kinds: TLC plates and high performance thin-layer chromatography (HPTLC) plates, such as silica gel plates, silica gel GF_{254} plates, polyamide membrane.

Home-made plates The home-made plates could be used if the plates need special treatment and chemical modification in order to meet the separation requirements given that the quality of the chromatogram is ensured. The most widely used stationary phases are silica gel G, silica gel GF_{254}, silica gel H, silica gel HF_{254}, microcrystallite cellulose, etc, the particle size of which is generally 10-40 μm in diameter. Water or solution of carboxymethylcellulose with the concentration of 0.2%-0.5% is then added appropriately to form a pasty which is then spread on the glass plates evenly. The spreader can be used to spread the stationary phase on the glass plates to form a uniform layer of definite thickness. The surface of the glass plate should be smooth and with no globule after cleaning.

(2) *Sample applicator* Micro-liter capillary or other hand-operated, semi-automatic and full automatic sample applicators are used generally.

(3) *Chromatographic chamber* For vertical development, a chamber of a size suitable for the plates, and with a flat bottom or twin trough, and provided with a tightly fitting lid should be used generally, while for horizontal development, a chamber specially designed for horizontal development should be used.

(4) *Visualization device* Glass mister sprayer or special mister sprayer should be used during spray visualization. Compressed gas should be used to eject the visualization reagent in the form of homogeneous mist. Special glass apparatus or appropriate glass chamber can be used instead during the immersion visualization. Twin trough glass chamber or desiccator with appropriately size could be used during the fumigation visualization.

(5) *Detection device* It is a camera obscura equipped with visible light and ultraviolet light of wavelength 254 nm and 365 nm, and corresponding filter. Additional camera equipment could be used to take picture. The light resource should have enough intensity of illumination.

(6) *TLC scanning instrument* It is used to scan the spot(s), which can absorb ultraviolet, visible light or emit fluorescence after being excited. Thus obtained scanning profiles of the chromatogram and the intergration data can be used for qualitative and quantitative analysis.

2. Procedure

(1) *Preparation of TLC plates*

Pre-coated plates Prior to the time of use, the plates should be activated at 110℃ for 30 min. The polyamide membrane need not be activated while the aluminium substrate plate could be clipped if necessary. Pay attention to the silica gel layer at the lower edge of TLC plate, which should not be broken. It may be necessary to pre-wash the plates in the way of vertical development by trichloromethane, methanol or the mixed solution of the above two reagents in the chromatographic chamber if the plates have been polluted by the impurity in the air during the storage. The plates are then activated at 110℃ and put away in the desiccator for later use.

Home-made TLC plates Unless specified otherwise, triturate the mixture of one part of stationary phase and three parts of water (or water solution with binder) in one direction, remove gas bubbles on the surface, and put the paste in the spreader, move the spreader smoothly and steadily over the glass plates (the thickness of the layer is

generally 0.2-0.3 mm). Allow the plate to be dried on a horizontal plane at the room temperature. Heat it at 110℃ for 30 minutes and then put it away in the desiccator for later use. Inspect the degree of the homogeneity under both the reflected light and the transmitted light, the surface of the plates should show uniformity, smooth without rough portion, gas bubble, breakage or impurity.

(2) *Sample application* Unless specified otherwise, the samples are applied on the TLC plates, usually in the form of circular spots or narrow bands, with special capillary or semi-automatic and automatic sample applicators under a clean and dry environment. The distance of the sample zone from the lower edge of TLC plate, is 10-15 mm, while that of HPTLC plates is 8-10 mm. The diameter of the circular spots is generally less than 3 mm for TLC, while less than 2 mm for HPTLC. It is essential that the thin layer where the sample applied should not be damaged. The width of the bands is generally less than 5-10 mm for TLC, while 4-8 mm for HPTLC. Sample could also be applied by spraying method with special semi-automatic or automatic sample applicators. Spots intervals should be adjusted according to the diffusion of the spots and with no interference between neighboring spots. Usually, the interval is not less than 8 mm for TLC, not less than 5 mm for HPTLC.

(3) *Development* Place the above plate loaded with sample into the chromatographic chamber, keeping a distance of about 5 mm from the line of applying sample to the edge of solvent in the chamber. Close the chamber tightly. Unless specified otherwise, the solvent ascends a definite distance, usually 8-15 cm for TLC, while 5-8 cm for HPTLC. When the mobile phase has moved over the prescribed distance, remove the plate and dry it for later visualization.

Add appropriate amount of solvent in the chromatographic chamber if the chamber should be preequilibrated before development. Close the chamber tightly for 15-30 minutes. After the vapor of solvent has reach equilibrium, place the plate loaded with samples quickly into the chamber and close it immediately tightly for development. If the vapor of the solvent should be saturated in the chromatographic chamber, filter paper of the same dimension with the inner diameter of the chamber should be laid on the inner wall of the chamber. Keep the chamber tightly for a while and allow it to be fully saturated before developing. If necessary, secondary development and two-direction development could be applied.

(4) *Visualization and detection* The coloured components of the sample could be detected directly under visible light. Appropriate visualization reagent could also be used for colouration in the way of spraying or immersion. They could also be visualized by being heated and detected directly under the visible light. Fluorescent chromatogram could be detected at 365 nm if the components can emit fluorescence itself or when meeting with some reagents. The silica gel plates with fluorescer (eg. silica gel GF_{254} plate) could be used if the components have no colour but have ultraviolet absorption. The chromatogram formed by fluorescence inhibitor can be observed on the plate at 254 nm.

(5) *Documentation* The image of the TLC could be taken by camera and saved in the form of optical picture or electronic image. The TLC scanning imstrument could also record the corresponding chromatogram.

3. System suitability test The experiment condition should be tested according to the respective requirements of each monograph for its suitability. The test solution and the reference solution are used to test and adjust the experiment condition in order to reach the required sensitivity, resolution and repeatability.

(1) *Sensitivity* During the limit test, the test solution, reference solution and reference solutions diluted for several times are applied, developed and visualized on the same TLC plate according to the prescribed chromatographic conditions. The latter should form distinct spots.

(2) *Resolution* During identification, the main spot(s) in the reference solution and in the test solution should be clearly separated. During limit test or assay, the peak used for quantification should be well separated with the neighboring peak. The formula for calculating the resolution (R) is:

$$R=2(d_2-d_1)/(W_1+W_2)$$

Where d_2 is the distance between the latter of the two neighboring peaks and the original point; d_1 is the distance between the former of the two neighboring peaks and the original point;

W_1 and W_2 is the peak width of the two neighboring peaks respectively.

Unless specified otherwise, the resolution should be more than 1.0.

(3) *Repeatability* The test solution should be applied on the same TLC plate parallelly. The relative standard deviation of the measured value of the peak area for the test components should be not more than 3.0%, for the one, which needs visualizing before measure, the relative standard deviation should be not more than 5.0%.

4. Measurement

(1) *Identification* The reference solution and the test solution of appropriate concentration are applied, developed and visualized on the same TLC plate. The colour (or fluorescence) and the position of the main spot(s) of the test solution should be identical with those of the spot(s) of the reference solution.

(2) *Limit test* Compare the test solution with the quantitatively prepared reference solution or its dilutions. Spot(s) in the chromatogram obtained with the test solution is (are) compared visually either to the corresponding spot(s) in the chromatogram obtained with the reference solution or spot(s) obtained with a series of reference solutions. The colour (or florescence) intensity of the spot(s) of the test solution should be lighter than that of the reference solution. While using the method of TLC scanning, the peak area should be less than that of the reference solution. If necessary, the number of the spots and limitation value should be prescribed.

(3) *Assay* The content of the corresponding component in the test solution could be determined according to the TLC scanning method.

5. TLC scanning method It is to scan the spots, which have ultraviolet light or visiblc light absorption or which can emit fluorescence after being excited, exposing the TLC plate to light of a certain wavelength. Thus obtained chromatograms and integral data are used to identification, limit test and assay. According to the physical structure of different scanning instrument, reflective scanning method in absorbance mode or fluorescence mode is generally used. Unless specified otherwise, the pre-coated TLC plates should be used in the assay.

Single-or dual-wavelength scanning method could be used. During dual-wavelength scanning, the wavelength at which the test spots have no or the least absorption should be used as a reference wavelength. The spots in the chromatogram of the test solution should have the identical shift ratio value (Rf), same absorption spectrum obtained by spectrum scanning or same maximum and minimum absorption wavelength with that of the reference solution in order to make sure the accuracy of the results. During the

quantitative analysis by using the TLC scanning method, it should be ensured that the amount of the sample spot being examined be within the linear range. If necessary, the amount of the test solution being applied on the plate could be adjusted appropriately. The test solution should be applied, developed, scanned, measured and calculated on the same plate with the reference solution.

Generally, two point calibration could be used for calculation when the TLC scanning method is used for assay. If the linear range is very narrow, multinomial regression of multiple level of standard calibration could be used. The test solution and the reference solution should be applied alternatively on the same TLC plate. The number of the spots of the test solution should not be less than 2 and that of the reference solution should not be less than 2 for each concentration. Scan the plate along the direction of development, but not horizontally.

Ⅵ C Column Chromatography

1. Adsorption column chromatography

The chromatographic tube is made of borosilicate glass with uniform internal diameter. A sintered glass disk or a wad of glass wool is placed at the contracted lower end of the tube to keep the adsorbent in the column. Adsorbents of uniform size are required in order to get good seperation. Unless otherwise specified, adsorbents of a uniform size 0.07-0.15 mm in diameter are commonly used. The size of the tube, the type and quantity of the adsorbent to be used, and the composition and flow rate of the eluent are specified under individual monograph.

(1) ***Packing the Adsorbent into the Column*** The column can be packed either by the dry method or the wet method.

①*Dry method* Fill the chromatographic tube with the dry adsorbent, tap the tube gently to form a compact column, then add the mobile phase along the inner wall of the tube. Alternatively, the chromatographic tube can be filled with the mobile phase first, and then the adsorbent added in small portions until a homogeneous bed of the adsorbent is formed. During the whole process the upper surface of the adsorbent must be covered by a layer of the mobile phase.

②*Wet method* Mix the adsorbent with the mobile phase, agitate to expel air bubbles and slowly add the mixture as a slurry into the chromatographic tube. Wash down the adsorbent adhering to the inner wall of the tube with the mobile phase, open the outlet of the tube and allow the mobile phase to flow slowly until the surface of the liquid is almost on the same level as the top of the column. The column is now ready for loading of the substance being examined.

(2) ***Loading the Substance Being Examined*** Unless otherwise specified, the substance being examined is dissolved in the mobile phase and added slowly along the inner wall of the tube, care should be taken that the adsorbent is not disturbed. The substance being examined can also be dissolved in a suitable solvent, mixed thoroughly with a small quantity of the adsorbent and added on top of the column when the solvent is volatilized. If the substance being examined is insoluble in the common solvents, mix it with the adsorbent in a mortar and add the mixture on top of the column.

(3) ***Elution*** It is usually done by changing the type or the composition of the mobile phase in the sequence of increasing order of eluting power, unless otherwise specified. Collect the eluate fractionally until the component disappears from the eluate or the amount eluted decreases markedly, then change the mobile phase and continue the elution as described above. It is important to keep sufficient mobile phase on top of the adsorbent during the whole process.

2. Partition column chromatography

The procedure is similar to that of adsorption column chromatography. The support, mixed with the liquid stationary phase, is added into the chromatographic tube in small portions, pressed with the flat end of a glass rod after each addition. The substance being examined may be dissolved in the liquid stationary phase, mixed with a small quantity of the support, and then loaded on top of the column, The mobile phase is saturated with the liquid stationary phase previously so as to prevent the change of distribution coefficient or degree of partition between two phases in the course of elution.

Ⅵ D High Performance Liquid Chromatography

High performance liquid chromatography (HPLC) is a method of chromatographic separation in which the mobile phase is pumped into a column containing stationary phase by a high-pressure pump system. The test solution injected is carried into the column by the mobile phase. All the components are separated in the column and pass through the detector sequentially. The recorder, integrator or data acquisition system thus records the chromatographic signals.

1. General requirement for the instrument

The HPLC in strument is used here, which should be checked periodically and meets the requirement of relative specification.

(1) *Chromatographic column* The most widely used packing material is the chemically bonded silica gel. Reverse-phase chromatographic system uses nonpolar packing materials, in which the most frequently used is octadecyl-silane bonded silica gel. Octylsilane and other type of chemically bonded silica gel (such as cyano and amino group bonded silica gel) are also used. Positive-phase chromatographic system uses polar packing material, the most widely used of which is silica gel. The ion-exchange resin is used in ion-exchange chromatography. The gel and macromolecular porous microsphere are used in size exclusion chromatography. Chiral bonded packing materials are used in separation of enantiomers (chiral chromatography).

The characteristics of the packing materials (the shape of the support, the particle size, the pore diameter, the surface area, the surface coverage of the bonded functional group, the carbon content and the bonding mode, etc.) and the pack of the chromatographic column effect directly the retention behavior and separation performance. The packing material with pore diameter less than 15 nm (1 nm=10 Å) is suitable for analysis of the compound whose molecular weight is less than 2000, pore diameter more than 30 nm is suitable for analysis of compound whose molecular weight is more than 2000.

The mobile phase in which the pH value is 2-8 is suitable for the stationary phase with silica gel as the support. If the pH value is more than 8, the silica gel may be dissolved and if the pH value is less than 2, the phase chemically bonded with the silica gel may be broken off. In the case when the

mobile phase in which the pH value is more than 8 should be used, the packing material, which is alkali-proof, should be chosen., such as bonded silica gel with high purity silicon as support and a high surface coverage, polymer coated packing material, the organic and inorganic hybridized packing materials and the non-silica gel packing materials. In the case when the mobile phase in which the pH value is less than 2 should be used, the packing material, which is acid-proof, may be chosen. Such as the octadecylsilane modified silica gel with diisopropyl or diisobutyl substitution, which has a bulk mass and thus results in a protection through a steric hindrance, or organic and inorganic hybridized packing material, etc.

(2) *Detectors* The most commonly used detector is the ultraviolet (UV) spectrophotometers. Besides, diode array detectors (DAD), fluorescence spectrophotometers, differential refractometers, evaporative light scattering detectors, electrochemical detectors and mass spectrometers may also be used.

The UV spectrophotometers, diode array detectors, fluorescence spectrophotometers and electrochemical detectors are all selective detectors. The response value is related not only to the concentration of the test solution, but also to the structure of the compound. On the contrary, the differential refractometers and evaporative light scattering detectors are general-purpose detectors; they will respond to all compounds. The response value of the evaporative light scattering detectors for compounds with similar structure is almost related to the mass of the test compound. Diode array detector may record the absorption spectrum within the prescribed wavelength range simultaneously, thus could be used to measure the spectrum and inspect the purity of the chromatographic peaks.

The response values of the UV spectrophotometers, fluorescence spectrophotometers, electrochemical detectors and differential refractometers are linear with the concentration of the test solution within a certain range, while the response value of the evaporative light scattering detectors is not always linear with the concentration of the test solution, if necessary, it should be transferred mathematically before calculation.

Different detectors have different requirements for the mobile phase. For example, if the UV spectrophotometer is used in the experiment, the mobile phase should at least meet the requirement for the solvent described in the UV spectrophotometry (Appendix Ⅴ A). When the light of lower wavelength is applied for detection, the cut-off wavelength of the organic solvent should be considered and it is better to use chromatographic grade organic solvent. The evaporative light scattering detectors and the mass spectrometers generally do not allow using the mobile phase that contains non-volatile salts.

(3) *Mobile phase* As the C_{18} chain is not able to keep an spread state in the water solution, the ratio of the organic solvent of the mobile phase should not less than 5%, in the reverse phase chromatographic system of which the stationary phase is octadecylsilane bonded silica gel. Otherwise the random curl of the C_{18} chain will lead to the change of the retention value of the component, which may result in the instability of the chromatographic system.

The type of the stationary phase, the composition of the mobile phase and the mode of the detectors specified under the monograph should not be changed. Others, such as the inner diameter, the length, the brand of the stationary phase and the particle size of the support, the flow rate of the mobile phase and the ratio of each component in the mixed mobile phase, the time span in the gradient elution program, the temperature of the column, the injection volumn and the sensitivity of the detectors could be changed appropriately to meet the requirement of the system suitability test. But for some certain monographs, in which only the specific brand of packing material is able to satisfy the requirement of the separation, clear indications should be given under them.

2. The system suitability test

The suitability test of the chromatographic system generally includes four indexes, number of theoretical plates, resolution, repeatability and tailing factors, in which the resolution and the repeatability are more practical indexes.

To carry out the suitability test of the chromatographic system according to the requirement under the individual monograph is to test the chromatographic system by using specific reference substance. The separation conditions of the chromatography should be adjusted in case if the requirement cannot be met.

(1) *Theoretical plates of the column* (n) Inject the test solution or the internal standard specified under the monograph into the system according to the prescribed chromatographic conditions. Record the chromatogram and measure the retention time t_R (in minutes or length units, the same as below, which should be in the same unit) and the peak width at half peak height ($W_{h/2}$) of the principle component peak of the test solution or that of the internal standard. Calculate the theoretical plates of the chromatographic column by the equation: $n=5.54(t_R/W_{h/2})^2$.

(2) *Resolution* (R) No matter in qualitative analysis or quantitative analysis, the peak(s) of substance being examined and other peaks, such as internal standard peak(s) or specific impurity peak(s) must have good resolution. The equation for calculating the resolution is:

$$R=\frac{2(t_{R2}-t_{R1})}{W_1+W_2}$$

Where t_{R2} is the retention time of the latter of the two adjacent peaks, t_{R1} is the retention time of the former of the two adjacent peaks.

W_1 and W_2 are the peak width of the two adjacent peaks (as Fig. 5).

Unless specified otherwise, the resolution value should not be less than 1.5 in quantitative analysis.

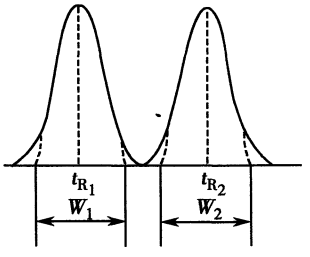

Fig. 5

(3) *Repeatability* Inject the reference solution described under the monograph for 5 times successively. Unless specified otherwise, the relative standard deviation of the measured value of the peak areas should be no more than 2.0%.

According to the measurement of the correction factor specified under each monograph, prepare a series of reference solutions equivalent to 80%, 100% and 120% of the content of the substance being examined, each containing a definite amount of internal standard substance, inject each solution at least 2 times, calculate the average correction factors, the relative standard deviation of which should be no more than 2.0%.

(4) *Tailing factor* (T) In order to guarantee the perfor-

mance of the separation and the precision of the measurement, the tailing factor should be inspected to see whether it meets the prescription under each monograph. The equation for calculating the tailing factor is as follows:

$$T=\frac{W_{0.05h}}{2d_1}$$

Where $W_{0.05h}$ is the peak width at 5% of the peak height, d_1 is the distance between the perpendicular line passing through the peak maximum and that of the leading edge of the peak. (as Fig. 6).

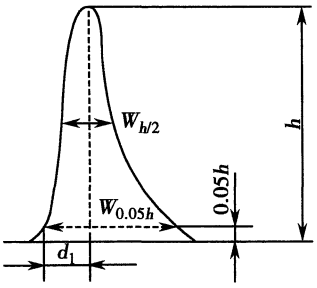

Fig. 6

Unless specified otherwise, the T value should be within 0.95-1.05 in the quantitative analysis by using peak height. In the quantitative analysis by using peak area, the over deviation of the T value will also effect the detection and the quantification precision of the small peak (s).

3. Procedure

(1) *Corrected internal standard method for the determination of individual impurities or the main components*

Prepare solutions containing an accurately weighed quantity of the reference substance and the internal standard respectively as specified in the monograph. Accurately measure each solution and prepare the reference solution for determining the correction factors. Inject a certain amount of solution into the equipment and record the chromatogram. Measure the peak area or height of the reference substance and the internal standard and calculate the correction factor according to the following equation:

$$\text{Correction factor}(f)=\frac{A_S/C_S}{A_R/C_R}$$

Where A_S is the peak area or the peak height of the internal standard
A_R is the peak area or the peak height of the reference substance
C_S is the concentration of the internal standard
C_R is the concentration of the reference solution

Prepare solutions containing the substance being examined and the internal standard as described in the monograph. Inject the solution into the equipment and record the chromatogram. Measure the peak area or the peak height of the substance being examined and that of the internal standard. Calculate the content as follows:

$$Content(C_x)=f\times\frac{A_x}{A'_S/C'_S}$$

Where A_x is the peak area or peak height of the substance being examined (or its impurity);
C_x is the concentration of the solution of the substance being examined (or its impurity);
A'_S is the peak area or the peak height of the internal standard;
C'_S is the concentration of the internal standard solution;
f is the correction factor.

If an equal amount of the internal standard of the same concentration is used both in preparing the reference solution for measuring the correction factor and in preparing the test solution, that is $C_S=C'_S$.

In this case accurate weighing is not necessary for preparing the internal standard solution.

(2) *External standard method for the determination of the individual impurity or the main component*

Prepare solutions containing an accurately weighed quantity of the reference substance and the substance being examined respectively and inject a certain amount of each solution into the equipment. Record the chromatogram and measure the peak area (or peak height). Calculate the content as follows:

$$Content(Cx)=C_R\frac{A_x}{A_R}$$

Where each symbol has the same meaning as that mentioned above.

As the micro syringe is not able to control the amount of solution being injected precisely, the sampling loop or automatic sampler may be used in measuring the content of the impurity and main components in the substance being examined.

(3) *Corrected peak areas of impurities compared with that produced by the main peak of a diluted solution of substance being examined*

This method could be used to measure the content of the impurity. Prepare solutions containing an accurately weighed quantity of the reference substances of impurities and the main component as specified in the monograph. Inject a volume and record the chromatogram. Calculate the correction factor of the impurity according to the method described in the (1). The correction factor could be directly recorded in the individual monograph and used for correction of the measured peak areas of impurities. These impurities, which need correction computation, are generally located by the relative retention time to the main component as the reference and all these data are recorded in the individual monograph.

When measuring the content of the impurities, dilute the solution of the substance being examined to a concentration as specified in the individual monograph so that its peak area is around that produced by the impurities in the original concentration. Inject and adjust the attenuation of the detector (limited by the noise level that can be accepted) or vary the injection volume (limited by the load ability of the column) until the peak height of the main component is about 10%-25% of the full scale or the peak area which could be accurately measured (generally, for the impurity, the content of which is lower than 0.5%, the RSD of the peak area should be less than 10%; while for the impurity, the content of which is between 0.5%-2%, the RSD of peak area should be less than 5%; for the impurity whose content is higher than 2%, the RSD of the peak area should be less than 2%). Inject separately an appropriately amount of test solution and reference solution. The recorded time span of the test solution, unless specified otherwise, should be 2 times that of the main component. Measure the peak areas of each impurity on the chromatogram of the test solution. Multiply them by the respective correction factors and then compare them with the peak area of the main component of the reference solution and calculate the content of the impurities accordingly.

(4) *Peak areas of impurities compared with that produced by the main peak of a diluted solution of substance being examined*

This method could be used when the impurity reference substance is not available. Prepare the reference solution

according to method (3) and adjust the attenuation of the detector. Inject separetely an appropriate volume of the test solution and reference solution. The record time span of the former should be 2 times that of the main component, unless specified otherwise. Measure the peak areas of the impurities on the chromatogram of the test solution and compare them with those of the main component of the reference solution and calculate the content of the impurities.

If there are some impurities in the substance being examined which are not completely separated from the solvent peak, record the chromatogram Ⅰ of the substance being examined according to the specification and then record the chromatogram Ⅱ of the pure solvent of equil volume. The peak area of the solvent solution on the chromatogram Ⅱ is subtracted from the total peak area of the impurities in the chromatogram Ⅰ (including the solvent peak). The result is equal to the correction peak area of the total impurities. Calculate the content of the impurities accordingly.

(5) *Peak area normalization method*

As the deviation of this method is so large that it can be only used to roughly inspect the contents of impurities in the substance being examined. It is not suitable for the determination of minute impurities, unless specified otherwise. In this method, the peak area of the impurities and the total peak area on the chromatogram except the solvent peak are measured. Calculate the peak area of each impurity and the percentage of their sum in the total peak area.

Ⅵ E Gas Chromatography

Gas chromatography (GC) is a separation technique in which the mobile phase, an inert gas known as carrier gas, is passing through the chromatographic column packed with packing materials for separation and determination. The substance or its derivatives are injected into the vaporizer with a micro-syringe and vaporized, separated on the stationary phase, each component passes through the detector in succession and a chromatogram is thus recorded by integrator, recorder or data acquisition system.

1. General requirements for the instrument

The apparatus consists of a carrier gas source, an injector port, a chromatographic column contained in an oven, a detector and a data acquisition system. The injection port, column, and detector are temperature-controlled.

(1) *Carrier gas source* The mobile phase of gas chromatography is gas, known as carrier gas. Carrier gases used are usually nitrogen, helium and hydrogen. The gas is supplied by a high-pressure steel cylinder or high-purity gas generator and passes through suitable pressure-reducing valves and a flow meter to the injector port and column. The gas selection depends on the properties of the substances being examined and the species of the detector. The commonly used carrier gas is nitrogen, unless specified otherwise.

(2) *Injection port* Direct injections of solutions and headspace injection are the usual modes of injection.

Direct injection may be carried out by using a syringe or an injection valve, or into a vaporization chamber which may be equipped with a stream splitter. The temperature of the vaporizer is usually 30-50℃ higher than that of the column when using direct injection. The volume of solution injected is not more than several μl. The smaller the column diameter the less volume of injected solution is. Capillary column is used with injectors which is able to split samples into two fractions to avoid overloading.

Headspace injectors are suitable for separation and determination of volatile component in solid or liquid substance being examined. The test solutions produced with solid or liquid substance being examined and stored in tightly closed containers are heated in the chamber for a period of time, allowing the volatile components in the test solution to reach a equilibrium between the nongaseous phase and the gaseous phase. A predetermined amount of the head-space of the vial is flushed into the column by automatic syringe.

(3) *The chromatographic column* The chromatographic columns are classified into the packed columns and capillary columns. The packed columns, which are made of stainless steel or glass, are 2-4 mm in internal diameter and 2-4 m in length. The columns are packed with the sorbent, porous polymer bead or the supports coated with liquid phase, particle size of which is 0.25-0.18 mm, 0.18-0.15 mm or 0.15-0.125 mm. The support usually used is acid washed and silanized diatomaceous earth or porous polymer beads; the liquid phase commonly used is methylpolysiloxane, polysilphenylene of different consist, polyethyleneglycol etc. The capillary columns are made of glass or quartz. The inner wall of the column is coated or cross-linked with stationary liquid, the internal diameter is usually 0.25 mm, 0.32 mm or 0.53 mm, the length is 5-60 m, and the film thickness of the stationary liquid is 0.1-5.0 μm. The stationary liquid commonly used are methyl poly siloxane, phenylmethylpolysiloxane with different ratio of composition and carbowax, etc. New packed and capillary column must be conditioned before use to remove oxygen and residual solvents. The chromatographic column must be conditioned before use until the baseline is stable if the column is not in use long time.

(4) *The column oven* The temperature-controlled precision of the oven should be ±1℃ and fluctuation of temperature should be less than 0.1℃ per hour, as the temperature fluctuation of oven will influence the reproducibility of chromatographic analysis result. Temperature-controlled system may be classified into constant temperature and temperature programming.

(5) *Detector* The detectors suitable for the gas chromatography include flame-ionization detector (FID), thermal conductivity detector (TCD), nitrogen-phosphorus detector (NPD), flame-photometer detector (FPD), electron-capture detector (ECD), mass spectrometric detector (MSD) etc.. FID responses well to hydrocarbon and is suitable for the determination of most drug compounds; NPD is sensitive to organic nitrogen and phosphorus compounds; FPD is sensitive to organic sulfur and phosphorus compounds; ECD is suitable for determination of halogen compounds; MSD can offer chemical construction information of the compounds which is useful for structure verification. Unless specified otherwise, the detector should be FID which employs hydrogen as combustion gas and air as combustion-supporting gas. When FID is used, its temperature is higher than that of the column and not less than 150℃ to prevent condensation of the vapour, which usually is 250-350℃.

(6) *Data process system* It is classified into recorder, integrator and computer station etc.

If necessary, parameters which specified under the individual monograph, except the kind of the detector, the type of the stationary phase and the material of the column, other parameters such as the intenal diameter and length of the column, brand and size of the support, concentration of the stationary phase, the flow rate of carrier gas, the temperature of the column, the injection volume, the sensitivity of the detector etc, may be varied to meet the requirment of the system suitability test. Usually the

chromatogram is completed within 30 minutes.

2. System suitability test

The requirements are the same as described under High Performance Liquid Chromatography, unless specified otherwise.

3. Procedure

(1) Corrected internal standard method for the determination of individual impurities or the main component.

(2) External standard method for the determination of individual impurities or the main component.

(3) Peak area normalized method.

The specific content of (1)-(3) is the same as described under High Performance Liquid Chromatography.

(4) Standard addition method for the determination of individual impurities or the main component. Dissolved an accurately weighed quantity of impurities or reference substance of the substance to be examined to produce reference solution with a suitable concentration. Measure accurately the solution and add to the test solution, then calculate the content of individual impurities or the main component by internal standard method or external standard method. Deduct the content of added standard solution and gain the content of individual impurities or the main component in the test solution.

The content may also be calculated by the following equation. The correction factor is the same as that of adding the reference solution.

$$\frac{A_{is}}{A_x}=\frac{C_x+\triangle C_x}{C_x}$$

The concentration C_x of component being examined may be calculated by the following equation.

$$C_x=\frac{\triangle C_x}{(A_{is}/A_x)-1}$$

Where C_x is the concentration of component X being examined;

A_x is the peak area of component X being examined;

$\triangle C_x$ is the concentration of added reference substance of component being examined.

A_{is} is the peak area of component X after adding reference substance of component being examined.

In quantitative assay of gas chromatography, a major source of error is the irreproducibility in the amount of sample injected, which is affected by retaining time of syringe and room temperature, notably when manual injections are made with a syringe. The effects of variability can be minimized by an internal standard. Automatic injectors greatly improve the reproducibility of sample injections and reduce the need for internal standards. When headspace injectors are equipped, the effect of matrix may be eliminated by standard addition method because the test solution and the reference solution are in different matrix. When the quantitative result of standard addition method is different from others, the result of standard addition method should be adopted.

Ⅵ F Capillary Electrophoresis

Capillary electrophoresis is a separation technique using elastic quartz capillary as the separation channel and high voltage direct current electric field as the driving force. The components in the sample are separated according to the difference of their migration velocity under the unit electric field strength and (or) phase partition. When a fused-quartz capillary is filled with an operating buffer, silanol groups on the inner wall of the capillary release hydrogen ions to the buffer, which cause the wall's surface to carry the negative charges, and then form an electrical double layer with the solution, even when the buffer is in a fairly low pH value. The solution with positive charges will move to the cathode by applying direct current voltage on the capillary. This movement of the solution under the force of the electrical field is called the electroosmotic flow (EOF). The ionization degree of silanol groups of the capillary innerwall mainly depends on the pH value of the operating buffer and the additive modifiers. When the pH value becomes lower, the silanol groups generally will have a low ionization degree, meanwhile the EOF becomes lower. When the pH value becomes higher, the silanol groups will generally have a high ionization degree and the EOF becomes higher. The addition of organic modifiers sometimes could affect the ionization degree of the internal surface, then it will result in the decreasing of the EOF. In the buffer, the charged particles migrate towards the opposite direction to their respective charge with different velocity under the action of electric field, resulting in electrophoresis. The migration velocity of the charged particles in the buffer is equal to the vector sum of its electrophoretic mobility and eletroosmotic mobility. The EOF is usually greater than the electrophoretic mobility; thus, even anions are swept to the cathode and the detector. Beside lower pH, coated capillaries can also cause a decrease in the EOF and reduce the substances adsorbing on silica surfaces.

1. Separation mode

The current separation modes of capillary electrophoresis are as follows:

(1) *Capillary zone electrophoresis* (CZE) In CZE, after the sample being introduced into the capillary, apply direct current voltage on the capillary. Every fractions will be separated depending on the differences in the rector sum of its electrophoretic and eletroosmotic mobility. The mobility differences are functions of their charge and size under specific method conditions. Neutro-moleculars can't be isolated from each other. The elution time of certain component in the electrophoretogram is called migration time (t_m), equivalent to the retention time in HPLC and GC.

(2) *Capillary gel electrophoresis* (CGC) For analysis of protein, DNA and other large molecules. One kind of operation, called capillary chemical gel electrophoresis, is carried out by loading monomers into the capillary and initiating monomers to form the gel for analysis. The other kind of operation, called capillary physical gel electrophoresis, is carried out by loading the solution of polymer with sieving action, such as dextran and polyethylene oxide, into the capillary for analysis.

(3) *Capillary isotachophoresis* (CITP) It employs two buffers, which enclose the analyte zones between them. Either anions or cations can be analyzed in sharply separated zones and pass through the detector one by one.

(4) *Capillary isoelectric focusing electrophoresis* (CIEF) Electroosmotic flow is minimized by coating the capillary internal wall and the mixture of sample and amphoteric electrolyte is injected into the capillary. Acid and alkali solutions are separately kept in two electrode reservoirs. The pH gradient is formed in the capillary after high voltage is applied. The solutes migrate to their isoelectric point respectively in the capillary, forming discrete zones. After focusing, the solutes pass through the detector by applying pressure or changing the pH value of the solutions in the electrode reservoirs at the end of the detector.

(5) *Micell electrokinetic capillary electrophoresis* (MEKC or MECC) Ionic surfactants are added to the operating buffer at a concentration above their critical micelle concentration. The micelles provide a pseudostationary phase. The substances are distributed between the aqueous phase and the micelle phase, travel along with the electroosmotic flow in the capillary, and are separated. With common anionic surfactant, sodium lauryl sulfate, strong hydrophilic component can not enter the micelle after injection. It flows towards the detector along the buffer solution (capacity factor $k' = 0$). But strong hydrophobic components enter the micelle core and reach the detector lastly ($k' = \infty$). Commonly used micelle reagents still include cationic surfactant, such as cetrimide and cholic acid.

(6) *Capillary electrochromatography* (CEC) It is carried out by loading the micro grain size stationary phase in the capillary and using electroosmotic flow as the driving force for the mobile phase.

Among the above modes, (1) and (5) are used more widely. Mode (5) and (6) are mainly chromatographic mechanism combined with electrophoresis. For the separation of optical isomers, a chiral selector, such as cyclodextrins, modified cyclodextrins, crown ethers, polysaccharides, proteins, chleolates or some kinds of antibiotics, is added into the operating buffer. Organic solvent is added to improve separation.

2. General requirement for the instrument

The main assembly unit of capillary electrophoresis apparatus and their function are described as follows:

(1) *Capillary* Using an elastic quartz capillary with internal diameter of 50 μm and 75 μm (capillary with larger internal diameter is sometime used in CEC). Smaller capillary diameter will usually cause lower heat, which will increase resolution and permit a higher voltage. However, larger capillary diameters have advantages of better mass loading and improved signal-to-noise ratio. Length of the capillary is called total length. Capillaries of 20-100 cm can be chosen according to the separating requirement; length between injector and detector is called effective length. Capillary is usually housed in a cartridge to control the Joule heat, viscosity of the operating buffer and electrical conductivity. This is very important to the repeatability of the measurments.

(2) *High-voltage direct-current power supply* A power supplying controllable direct-current of 0-30 kV, which can supply direct-current of about 300 μA and provide constant voltage and constant currency.

(3) *Electrode and electrode reservoirs* Add operating buffer into two electrode reservoirs, insert two ends of the capillary and platinum electrodes into the operating buffer; connect platinum electrodes with high-voltage direct-current power supply, the polarity of electrodes can change with each other. In many type of instruments, sample bottles are also serve as electrode reservoirs.

(4) *Auto-flush and injection system* Capillary should be flushed with different solutions each time before injection. It is convenient to flush the capillary by auto-flush and inject system. Modes of sample introduction into the capillary include electromigration (electrokinetic mode) and negative- and positive-pressure injection (hydrostatic mode). The sample volume injected depends on the time of the voltage or pressure applied.

(5) *Detection system* CE system can use UV-visible absorbance detectors, laser-induced fluorescence (LIF) detectors, electrochemical detector and mass spectrometric detector. UV-visible absorbance detectors, including single wavelength, programming wavelength and photodiode array detector, are most widely applied. Strip polymer from the outer layer of the capillary about 2 mm in length and make the quartz tubal wall to be exposed. Put a quartz ball on both side of the capillary so that the light can be focused on and pass through the capillary and reach the photovoltaic cell. Indirect test method may be adopted to detect non-absorption (or fluorescent) solute. Additives which can absorb light (or fluorescence) may be added to the operating buffer so that reversal peak will appear as solute reach detection windows.

(6) *Data processing system* It is generally the same as common chromatographic data processing system.

3. System suitability test

System suitability test, such as repeatability (relative standard deviation, RSD), capacity factor (k'), theoretical plate number of capillary, resolution (R), tailing factor (T), linearity range, limit of detection (LOD) and limit of quantitation (LOQ), together with calculating equation and requirements are the same as those described under HPLC or GC in order to investigate the configuration of the capillary electrophoresis system and the setting of parameters. The concrete index should meet the requirements specified under each monograph, especially the effect on the precision of the analysis produced by the precision of the sample introdution and the difference in the migration rate of different charged analytes.

4. Procedure

(1) Switch on the instrument, pre-heat, input parameters, such as capillary temperature, operating voltage, detection wavelength and flush procedure, etc. Filtrate and degas the operating buffer. Fill the flush solution and buffer in the sample bottles, put onto the injector in order.

(2) The treatment of the capillary has large effect on the detection result. Using of a new uncoated fused-silica capillary usually requires a regeneration procedure to activate the surface silanol groups. This procedure may include an extended rinse with 1 mol/L sodium hydroxide solution at 60℃ and then with 0.1 mol/L sodium hydroxide solution, water and operating buffer, each for a few minutes. In the intermission of runs, the capillary may be rinsed with the operating buffer. But if the efficiency of separation changed, the capillary should be rinsed with 0.1 mol/L sodium hydroxide solution, even with concentrated hydroxide solution at high temperature. Gel capillary, coated capillary and packed capillary may be rinsed following their guidelines. Put the rinsing solution onto the injector in order, set the order and time program.

(3) Type of operating buffer, pH value, concentration and additive (used for increasing solubility and (or) controlling the degree of dissociation and separating the chiral components, etc.) have large effect on the detection result. They may be prepared according to the procedure specified in the monograph and adjusted and optimized according to the result.

(4) Put the bottles filled with samples onto the injector, set operating parameters, such as pressure (voltage in electrokinetic mode), injecting time, injecting terminal (positive electrode or negative electrode), operating voltage or current and detection parameter, etc, begin testing. Adjust the operating parameters and operating buffer according to the electrophoretogram.

(5) After analysis, the capillary is rinsed with water and the ends of the capillary are preserved in water. For long time preservation, it should be flushed with nitrogen gas to dry before shutting the instrument.

(6) Injection precision is not as good as HPLC because of the limitation of injection methods. The required injection precision for a specific method may need the use of an internal standard. Viscosity of test solution will affect

injection volume with negative-and positive-pressure injection. It is necessary to keep uniform viscosity of the test solution and the reference solution. When the electrokinetic mode is used, electric discrimination phenomenon and ionic strength of solution will affect the migration amount of component in the solution.

Appendix Ⅶ

Ⅶ A Determination of Relative Density

Relative density is defined as the ratio of the mass density of a substance to that of water under the same conditions of temperature and pressure. Unless otherwise specified, the measuring temperature is 20℃.

Relative density of the pure substance is a constant under particular condition. But, when the substance is not purified the determined value of relative density changes with the purity. So relative density is indicative of the identity and purity of the substance being examined.

The relative density of a liquid can be determined with a pycnometer (as Fig. 7 or as Fig. 8). In some cases, the Westphal balance (as Fig. 9) is used, for example, in the determination of the relative density of a volatile liquid.

The temperature of the determination environment of the pycnometer and balance should be a little bit below 20℃ or that specified under individual monograph.

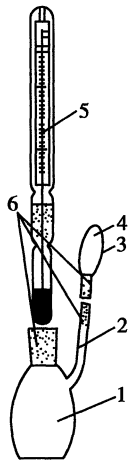

Fig. 7

1 main body of pydometer
2 side tube 3 side pore 4 mask
5 thermometer 6 glass joints



Fig. 8

1. Pycnometric method

(1) Fill a clean, dry and accurately weighed pycnometer (as Fig. 7) with the substance being examined (keep the temperature below 20℃ or that specified under individual monograph), fix the thermometer (no air bubble is left in the pycnometer). Place the pycnometer in a water bath maintained at 20℃ or the specified temperature, allow to stand in the water bath for several minutes, so as to raise the temperature of the content to 20℃ or to the temperature specified in the monograph. Wipe away the liquid overflown from the side tube with a piece of filter paper and put the cap immediately. Remove the pycnometer from the water bath and clean off any material on the outside with a piece of filter paper, weigh the pycnometer accurately and calculate the weight of its content.

Discard the content of the pycnometer and wash the pycnometer with water, fill it with freshly boiled and cooled water. Determine the weight of the water in the pycnometer in a similar manner. The relative density of the substance being examined can be calculated from the following formula:

$$\text{Relative density}=\frac{\text{weight of the substance being examined}}{\text{weight of water}}$$

(2) Fill a clean, dry and accurately weighed pycnometer (as Fig. 8) with the substance being examined (keep the temperature below 20℃ or that specified under individual monograph). Insert the capillary stopper and wipe away the overflown liquid with a piece of filter paper. Place the pycnometer in a water bath maintained at 20℃ or the specified temperature, allow to stand in the water bath for several minutes.

Some of the liquid spills out through the capillary constantly with the rise of the temperature of the content. Wipe away the overflown liquid with a piece of filter paper at any time until the fluid does not overflow anymore. Remove the pycnometer from the water bath rapidly. Proceed as described under method (1), starting from the words "clean off any material on the outside with a piece of filter paper..."

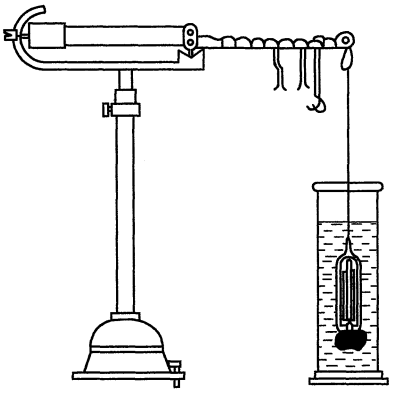

Fig. 9

2. Hydrostatic method

Fill the glass cylinder of the Westphal balance (as Fig. 9) with freshly boiled and cooled water to about 80% of the volume. Place the cylinder and stir the content of it in a water bath maintained at 20℃ or the specified temperature. Dip the plunger hung on the end of the beam into the water in the cylinder, place a rider at the notch marked 1.0000 and adjust the equilibrating screw until the beam is horizontal. Discard the water and wipe away any water left in the cylinder, fill the cylinder with the substance being examined to about 80% of the volume and adjust the temperature as mentioned above. Dip the plunger into the substance being examined and equilibrate again by placing suitable riders at

appropriate notches along the beam. The reading gives directly the relative density of the substance being examined. If the Westphal balance is standardized to give a relative density of 1.0000 at 4℃, the riders should be placed at appropriate notches to give a reading of 0.9982 when calibrating with water at 20℃, and the relative density of the substance being examined, measured at 20℃, should be divided by 0.9982.

Ⅶ B Determination of Distilling Range

The distilling range of a liquid is the temperature range, corrected for a pressure of 101.3 kPa (760 mmHg), within which the liquid distils under the following conditions. The lower limit of the range is the temperature at which the fifth drop of condensate leaves the tip of the condenser and the upper limit is the temperature at which all the liquid except 3-4 ml has been distilled, or when a specified amount of distillate has been collected.
Distilling range is indecative of the identity and purity of the substance being examined.

Apparatus Use a set of distillation apparatus No. 19, with standard ground joint made in China (as Fig. 10), A, a distillation flask; B, a condenser, for liquids distilling below 130℃, the condenser is cooled by water, for liquids distilling above 130℃, it is cooled by air; C, a 25 ml glass cylinder, graduated in 0.5 ml increments; D, a partial-immersion thermometer, graduated in 0.5℃ subdivisions and calibrated. The upper end of the mercury bulb is level with the lower wall of the side-tube of distillation flask. According to different distilling range of the substance being examined, select different heater. For liquids of distilling range below 80℃, a water bath is used as the heater; for liquids of distilling range above 80℃, use an open flame or an electric heater.

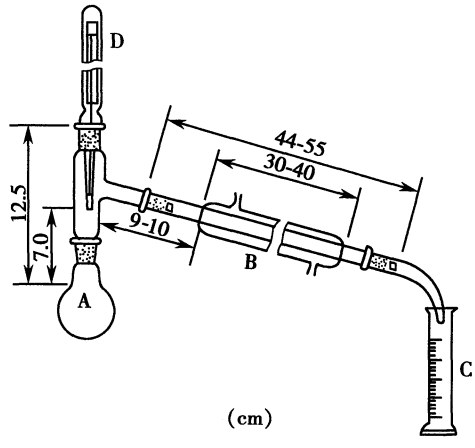

Fig. 10

Procedure Pour 25 ml of the substance being examined into the dried distillation flask through a dry funnel with a long stem. Add a few enamel-free porcelain fragments and insert the thermometer with ground joint. Attach an adapter to the lower end of the condenser and put the cylinder under the adapter. If heat with an open flame, place the distillation flask on the hole in the center of an asbestos plate (in the form of a square with sides of 12-15 cm and with a perforation of 2.5-3.0 cm in diameter in the center, 0.3-0.5 cm thick), the bottom of the flask should be fitted tightly into the perforation to avoid the excessive heating of the vapour of the liquid. Heat with an open flame so that the liquid distils at a rate of 2-3 ml per minute. Record the temperature at which the fifth drop of condensate leaves the tip of the condenser and the temperature at which all the liquid except 3-4 ml has been distilled, or when a specified volume of distillate has been collected. The temperature range exhibited on the thermometer, is the distilling range of the substance being examined. When not less than 90% of the liquid is to be distilled within the distilling range, use a 100 ml distillation flask with 50 ml of the substance being examined, and a 50 ml galss cylinder as the receiver.
Correct the observed temperature readings for any variation in the barometric pressure from the normal (101.3 kPa or 760 mmHg) by subtracting or adding 0.1℃ for every 0.36 kPa (2.7 mmHg) increase or decrease of the pressure.

Ⅶ C Determination of Melting Point

Three methods for the determination of melting point are given herein, varying in accordance with the nature of the substance being examined. When no specified method is designated in the monograph, use method 1.

Method 1 For pulverizable solid substances
Pulverize the substance being examined to a fine powder, dry at a temperature as specified in the monograph under the test for loss on drying. If no drying temperature is specified in the monograph, dry the substance at 105℃ if it melts above 135℃ without decomposition; if the substance melts below 135℃ or decomposes on heating, dry it overnight over phosphorus pentoxide or with and suitable method, e. g. in vacuum at a constant temperature.
Transfer a quantity of the dried powder to a capillary tube (made of neutral hard glass with one end sealed, 0.9-1.1 mm in internal diameter with a wall thickness of 0.10-0.15 mm and at least 9 cm in length. When a capillary tube is immersed in the liquid as heat source, not less than 3 cm of it is above the surface of the liquid) and pack the powder by tapping on a hard surface or dropping from the top of a clear vertical glass tube so as to form a tightly packed column of 3 mm in height. Put the thermometer (a partial-immersion thermometer graduated in divisions of 0.5℃ and calibrated with a reference substance for melting point determination) into the glass vessel with heating liquid (the heating liquid is water for melting points below 80℃; liquid paraffin, silicone oil for above 80℃), the bottom of its bulb is at least 2.5 cm away from the bottom of the vessel (when the vessel equipped with internal heating is used, the bulb of the thermometer is at least 2.5 cm away from the surface of the heating source). Add the appropriate liquid to the vessel until the surface of the liquid reaches the immersion line of the thermometer when it is heated. Heat the bath with stirring, when the temperature is about 10℃ below the lower limit of the expected milting range, insert the capillary tube into the bath, the content of the tube being kept close to the middle of the bulb of the thermometer. Regulate the rate of temperature rise to 1.0-1.5℃ per minute, and keep the temperature uniform in the bath with constant stirring. Record the temperature of the beginning of melting to the end of melting. Repeat for 3 times and take the mean value.
"Beginning of melting" is the temperature at which partial liquefaction of the substance in the capillary tube occurs and definite ilquid drop just appears.

"End of melting" is the temperature at which liquefaction of the substance takes place just completely.

For a substance which melts with decomposition, the melting point is determined in the same way as described above except that the rate of temperature rise is regulated to 2.5-3.0℃ per minute. The temperature at which liquefaction occurs (or frothing begins) is taken as the beginning of melting, and the temperature at which solid phase disappears is regarded as the end of melting. If the solid phase disappears not distinctly, the temperature at which expanding and rising of decomposition product occurs is taken as "end of melting". If there is no distinction between the beginning and the ending of melting, the temperature at which a sudden change of the substance occurs should be recorded. This temperature, as well as the beginning and the ending of melting point must fall within the melting range as specified in the monograph.

Mehod 2 For substances not pulverizable (such as fat and fatty acids, hard paraffin, lanolin etc.)

Melt the substance at a temperature as low as possible, and then suck the liquid up to a height of about 10 mm in a capillary tube which is left open at both ends. Cool the tube at 10℃ or lower for 24 hours or cool it on ice for not less than 2 hours. Attach the tube to the thermometer by means of a rubber band so that the column of substance in the tube is kept colse to the middle of the bulb of the thermometer (as method 1). Place the thermometer and capillary tube into the heating bath, the distance between the upper end of the column of substance and the level of heating liquid is about 10 mm. Heat the bath with constant stirring until the temperature is about 5℃ below the lower limit of the expected melting range, regulate the rate of temperature rise to not more than 0.5℃ per minute. Record the temperature at which the substance in the capillary tube begins to move upwards.

Method 3 For vaseline or other similar substances

Place a quantity of the substance being examined in a heat-resisting vessel with flat bottom, stir slowly and heat until it reaches a temperature of 90-92℃, allow the thickness of the substance being examined reaches 12 mm±1 mm, then cool to a temperature of 8-10℃ above the specified melting point. Dip vertically a thermometer graduated in divisions of 0.2℃ with mercury bulb 18-28 mm long and 5-6 mm in diameter (previously put a cork at the upper end and with a groove cut in the side, chilled to 5℃, wipe to dry) into the above molten substance to the bottom of the vessel (immerse 12 mm). Withdraw it immediately, and hold it vertically until the surface of the substance adhesived at the bulb of thermometer becomes turbid, then dip it for 5 minutes into a water bath at a temperature below 16℃, then place the thermometer in a test tube with external diameter about 25 mm and 150 mm long, stopped tightly. Fix the thermometer securely in the test tube so that the bulb of thermometer is about 15 mm above the bottom of the test tube. Suspend the test tube in a water bath of about 16℃, adjust the height of the test tube to make the partial-immersion line of the thermometer at the surface of water; raise the temperature of the bath at the rate of 2℃ per minutes to 38℃, then change to a rate of 1℃ per minute and record the temperature at which the first drop of melted substance leaves the thermometer: This is the approximate melting point of the substances being examined. Repeat the determination twice. If the variation of three determinations is less than 1℃, take the average of the three as the melting point. If the variation of three determination is greater than 1℃, make two additional determinations and take the average of the five.

Ⅶ D Determination of Congealing Point

The congealing piont of a substance, determined as described below, is the highest temperature, which remains constant for a short time, occuring during the solidification of the liquid. Congealing point is indicative of the identity and purity of the substance being examined.

Apparatus As Fig. 11, a dry test tube (A) about 25 mm in internal diameter and 170 mm long is suspended by means of a bored cork inside a larger tube (B) about 40 mm in internal diameter and 160 mm long. The distance between the bottoms of the two tubes is about 10 mm. The inner tube is stoppered by a bored cork which carries a thermometer (C) graduated in 0.1℃ and stirrer (D). The thermometer is so fixed that the bottom of its bulb is about 10 mm from the bottom of the inner tube. Stirrer (D) is a glass rod slightly bent at the upper end, the other end is in the form of a loop which is about 18 mm in diameter at right angle to the rod. The whole assembly is placed in a 1000 ml beaker containing water or a suitable cooling liquid and the surface of the cooling liquid is about 20 mm from the mouth of the beaker.

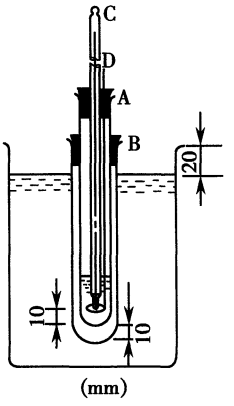

Fig. 11

Procedure Place in the inner tube 15 ml of the liquid or 15-20 g of the melted solid substance being examined and determine the approximate congealing point by cooling rapidly. Place the inner tube in a water bath about 5-10℃ above the approximate congealing point until all the solidified substance but the last trace is melted. Fill the beaker with water or other suitable cooling ilquid at a temperature about 5℃ below the approximate congealing point and fix the apparatus as described above. Stir the liquefied substance gently and read the temperature every 30 seconds until it begins to solidify. Stop stirring and read the temperature every 5-10 seconds until the temperature remains constant or becomes constant after a slight eleration for about 1 minute. The highest temperature observed is regarded as the congealing point of the substance being examined.

Annotations If the substance being examined does not start to solidify under normal condition, congealation may be induced by adding a small amount of the substance crystallized by cooling to a lower temperature.

Ⅶ E Determination of Optical Rotation

The plane of polarized light can be rotated clockwise or counterclockwise when plane polarized light passes through some liquids or solutions of compounds which are optically active. Optical rotation is expressed in degrees by which the plane of polarization is rotated under specified condition. Specific optical rotation is defined as the optical rotation measured under given wavelength and temperature, when polarized light passes through a layer of a solution 1 dm thick containing 1 g of optically active substance per ml. The measurement of specific optical rotation (or optical rotation) may be used as an identification test, a purity test or a method of assay.

Unless otherwise specified, the values of optical rotation cited in this method are measured at 20℃ with sodium D line (589.3 nm), in a tube of 1 dm. Conversion factor should be applied if the tube used is not of the appropriate length. Optical rotation is measured with a calibrated polarimeter accurately read to 0.01°. Rinse the polarimeter tube several times with the liquid or solution prepared as described in the individual monograph. Fill the polarimeter tube slowly with the liquid or solution, taking care to avoid creating or leaving air bubbles. Put the tube into the polarimeter and read the degrees of optical rotation. Substances are described as dextrorotatory or levorotatory according to whether the plane of polarization is rotated clockwise or counterclockwise, respectively, as viewed toward the light source. Dextrorotation is designated (+) and levorotation is designated (−). Carry out 3 measurements, take the average and calculate the specific optical rotation from one of the following equations:

For liquids $$[\alpha]_D^t=\frac{\alpha}{ld}$$

For solid substances $$[\alpha]_D^t=\frac{100\alpha}{lc}$$

Where $[\alpha]$ is specific optical rotation;
D is sodium D line;
t is measuring temperature;
l is the length of the polarimeter tube, dm;
α is the observed rotation in angular degrees;
d is the relative density of the liquid;
c is the weight of solute (g) in 100 ml of the solution, calculated on the dried basis or anhydrous basis.

Standard quartz polarimetric tube may be used to calibrate the polarimeter, the deviation of reading should comply with the requirements.

Announcements (1) Blank tests should be performed to check the zero point before and after each measurement. If the deviation of reading does not comply with the requirements after measurement, repeat the measurement.

(2) The temperature of the solution being tested should be kept constant at 20℃ ± 0.5℃ (or at the temperature specified in the individual monograph).

(3) Liquids or solutions of solid substance should be completely dissolved, and the test solution should be clear.

(4) The specific rotation of a liquid or a substance in solution is affected by several factors including light source, wavelength, solvent, concentration and temperature. When describing the specific optical rotation, the measuring condition should be provided.

Ⅶ F Determination of Refractive Index

Refraction takes place when a beam of light is transmitted from a transparent medium into another transparent medium, since the velocity of light changes in a medium of different density. The refractive index of a substance is the ratio of the velocity of light in air to its velocity in the substance. The refractive index may also be defined as the ratio of the sine of the angle of incidence to the sine of the angle of refraction:

$$n=\frac{\sin i}{\sin r}$$

Where n is the refractive index;
i is the angle of incidence;
r is the angle of refraction.

The refractive index varies with the temperature of the substance being examined and the wavelength of incident light. It decreases with the increase of temperature. The shorter the wavelength of incident light, the larger the refractive index. Refractive indices are usually stated in terms of sodium line D at a temperature of t and symbolized by n_D^t. The measurement of refractive index is employed to establish the identity of oils and test for purity of the substance being examined.

Unless otherwise specified, the values of refractive index cited in this method are measured at 20℃ with sodium line D (589.3 nm) against air (White light may be used if an Abble refractometer is available).

The refractometer should be able to give readings accurate to 0.0001 in the range of 1.3-1.7. If an Abble refractometer or other equivalent instrument is used, the measurement should be conducted at 20℃ ± 0.5℃ (or in accordance with the temperature stated under individual monograph). Three readings should be taken and the mean value is used as the refractive inedx of the substance being examined. The readings of the refractometer should be calibrated before use with a prism or against water. The refractive index of water is 1.3330 at 20℃, 1.3325 at 25℃ and 1.3305 at 40℃.

Ⅶ G Determination of pH Value

The pH value of an aqueous solution is determined by a pH meter using a glass electrode as the indicator electrode, and a saturated calomel electrode as the reference electrode. Metrological verification of the pH meter should be carried out at regular intervals to meet the related national requirements. Before each measurement, the pH meter should be calibrated with the standard buffer solutions prepared as follows, or those of a declared pH valve accurate to 0.01 pH unit distributed by national administrative department of certified reference material (CRM).

1. Standard buffer solutions used for the calibration of pH meters are prepared as follows.

(1) *Standard tetraoxalate BS* Dissolve 12.71 g of potassium tetraoxalate, previously dried at 54℃ ± 3℃ for 4-5 hours and accurately weighed, in water to produce 1000 ml.

(2) *Standard biphthalate BS* Dissolve 10.21 g of potassium biphthalate, previously dried at 115℃ ± 5℃ for 2-

3 hours and accurately weighed, in water to produce 1000 ml.

(3) *Standard phosphate BS* Dissolve 3.55 g of anhydrous disodium hydrogen phosphate and 3.40 g of potassium dihydrogen phosphate, previously dried at 115℃±5℃ for 2-3 hours and accurately weighed, in water to produce 1000 ml.

(4) *Standard sodium tetraborate BS* Dissolve 3.81 g of sodium tetraborate, accurately weighed (avoid efflorescence), in water to produce 1000 ml. Preserve the solution in well closed polyethylene containers, protected from carbon dioxide in the air.

(5) *Standard calcium hydroxide BS* Use the supernatant of a saturated solution of calcium hydroxide, saturated with carbon dioxide-free water at 25℃. Store protected from carbon dioxide in the air. Discard and repeat the preparation if the solution becomes turbid.

Standard buffer solutions mentioned above must be prepared from the certified reagents for pH determination. The exact pH values of the standard buffer solutions at different temperatures mentioned above are given in the following table.

Temp. ℃	Standard buffer solutions①				
	1	2	3	4	5
0	1.67	4.01	6.98	9.64	13.43
5	1.67	4.00	6.95	9.40	13.21
10	1.67	4.00	6.92	9.33	13.00
15	1.67	4.00	6.90	9.28	12.81
20	1.68	4.00	6.88	9.23	12.63
25	1.68	4.01	6.86	9.18	12.45
30	1.68	4.02	6.85	9.14	12.29
35	1.69	4.02	6.84	9.10	12.13
40	1.69	4.04	6.84	9.07	11.98
45	1.70	4.05	6.83	9.04	11.84
50	1.71	4.06	6.83	9.01	11.71
55	1.72	4.08	6.83	8.99	11.57
60	1.72	4.09	6.84	8.96	11.45

① The standard buffer solutions are numbered here in the same sequence as shown in the preceding paragraph.

2. Announcements Operate the pH meter according to the manufacturer's instructions and pay attention to the following precautions when pH value is determined.

(1) Select two standard buffer solutions with difference in pH value of 3 units before determining test solution, and the pH value of the test solution is between that of two standard buffer solutions.

(2) Calibrate the apparatus using the primary standard buffer solution whose pH value is closer to test solution, adjusting the meter (fixed position) to read the appropriate pH value given in table mentioned above.

(3) Then calibrate the apparatus using the second standard buffer solution. The deviation should not be more than ± 0.02 pH units, adjusting the slope carefully to make the observed pH value meet the value in the table mentioned above if it is not. Repeat the adjusting procedure for fixed position and slope until the difference between the observed value on the apparatus and the value of standard buffer solution is not more than 0.02 pH units. Otherwise the apparatus should be examined or the electrode should be exchanged till comply with the requirement.

(4) The electrode should be rinsed with water and dried (or rinsed with the solution being examined) before each measurement.

(5) A highly alkaline glass electrode should be used if the pH value of the solution being examined is high. The error caused by alkalinity should be corrected if the electrode used is apt to produce such an error.

(6) The determination of the pH value of a liquid with weak buffering capacity (e.g. water) should be conducted after the pH meter is calibrated with standard potassium biphthalate BS and repeated after the pH meter is calibrated with standard sodium tetraborate BS. The readings should not be recorded until the shift in 1 minute is within 0.05 unit. The pH value of the liquid being examined is the mean value of the two readings provided that they do not differ by more than 0.1 unit.

(7) Freshly boiled and cooled distilled water with a pH value of 5.5-7.0 should be used for preparing standard buffer solutions and dissolving the substance to be examined in pH determinations.

(8) Usually, the standard buffer solutions can be kept for 2-3 months, but should not be used if any turbidity, mould or precipitate is discovered.

Appendix Ⅷ

Ⅷ A Potentiometric Titration and Dead-stop Titration

The potentiometric method and dead-stop method may be used for the confirmation of end point or the colour change of indicators at the end point. Using a suitable electrode system, these methods can be applied to oxidation-reduction, neutralization aqueous solution or non-aqueous solution, argentometric and nitrite titrations as well as the method 1 of volumetric determination of water. Two different electrodes are used in potentiometric titration, one is an indicator electrode, whose potential is sensitive to the ionic concentration of the substance being examined, the other is a reference electrode, whose potential is constant. At the end point of the titration, the ionic concentration of the substance being examined changes sharply, causing an abrupt increase or decrease of the potential (a potential jump) of the indicator electrode.

In the dead-stop titration, a low voltage of about 50 mV is applied across two same platinum electrodes. Since the electrodes are polarized, there is no current or only a very weak current flows. When the end point is reached, a slight excess of the titrant depolarizes the electrodes and a current flows, causing a permanent deflection of the galvanometer needle. On the other hand, if non-polarized electrodes are polarized, the deflected galvanometer needle turns back to zero permanently.

Apparatus In potentiometric titration, a pH meter or potentiometer, or any model of a potentiometric titration apparatus may be used. In dead-stop titration, any model of a dead-stop titration apparatus or an assembly illustrated in the following figure may be used. (as Fig. 12)

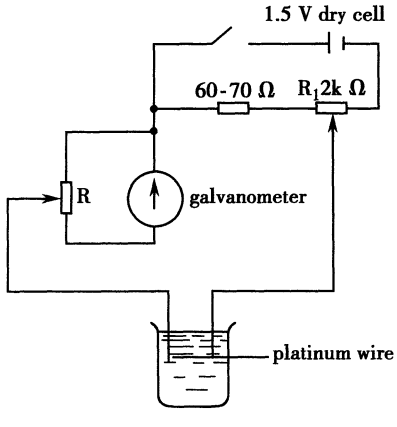

Fig. 12
the value of *R* is approximately equivalent to the critical damping resistance of the galvanometer

Unless otherwise specified, the sensitivity of galvanometer is 10^{-6} A per graduation for the determination of water, and 10^{-9} A per graduation for nitrite titration. The electrode system employed are shown in the following table.

Procedure	Electrode system	Note
Redox titration in aq. solution	Platinum-calomel	Platinum electrode cleaned with nitric acid containing a small quantity of ferric chloride, or with chromic acid cleaning solution
Neutralization titration in aq. solution	Glass-calomel	
Neutralization titration in no-naqueous solution	Glass-calomel	Use a saturated solution of KCl in dehydrated methanol as the salt bridge. Wash the glass electrode after each titration and immerse in water while not in use
Argento-metric titration	Silver-glass Silver-KNO_3 salt bridge-calomel	Silver electrode cleaned with dilute nitric acid
Hydrogen displacement in —C≡CH	Glass-KNO_3 salt bridge-calomel	
Mercury potentio-metric titration	Platinum-mercury-mercurous sulfate	Platinum electrode rinsed with water after being immersed in 10% (w/v) sodium thiosulfate. Platinum-mercury-mercurous sulfate electrode rinsed with water after being immersed in dilute nitric acid
Dead-stop titration	Platinum-platinum	Cleaned with nitric acid containing a small quantity of ferric chloride, or with chromic acid cleaning solution

Titration

(1) *Potentiometric Titration* Place a beaker containing the solution of the substance being examined on a magnetic stirrer, dip the electrodes into the solution and start the stirrer. Add the titrant from a burette in portions, record the potential after each addition. When the end point is nearly reached, add the titrant dropwise and record the potential. Add a few drops more after the potential jump and record the potential reading.

Potentiometric end point detection Plot an E-V curve with the potential (E) as ordinate and the volume of titrant (V) as abscissa, the midpoint of the rapid ascent or descent portion is the end point. Alternatively, plot a $(\Delta E/\Delta V)$-V curve (ΔE is the potential difference between successive measurements and ΔV is the volume of titrant added between successive measurements), the volume corresponding to the maximum of $\Delta E/\Delta V$ is the end point. Also the end point can be determined by second derivative method. Plot a $(\Delta^2 E/\Delta V^2)$-V curve, calculate the difference between successive

$\Delta E/\Delta V$, i. e. $\Delta^2 E/\Delta V^2$, the volume corresponding to $\Delta^2 E/\Delta V^2=0$ is the end point.
If the colour changes of an indicator at the end point is to be checked, add the indicator solution before the titration and observe the colour changes in the vicinity of the end point.

(2) *Dead-stop Titration* For the indication of the end point of diazotization reaction by a nitrite titration, apply a voltage of about 50 mV across the electrodes by adjustion R_1. Place an accurately weighed quantity of the substance being examined in a beaker on a magnetic stirrer, add 40 ml water and 15 ml of hydrochloric acid solution (1→2), unless otherwise specified, stir to effect dissolution. Add 2 g of potassium bromide, dip the electrodes into the solution, plunge the burette into the solution so that about 2/3 of the tip is under the liquid surface, titrate with sodium nitrite (0.1 or 0.05 mol/L) VS quickly with stirring. Withdraw the burette tip when the end point is nearly reached, rinse it with water and add the washings to the solution, continue the titration slowly until the galvanometer needle is permanently deflected.
For the indication of the end point of the method 1 of volumetric determination of water, adjust the resistance R_1 until the galvanometer shows an initial current of 5-10 μA, titrate with Fischer reagent until the current rises to 50-150 μA abruptly and the deflection of galvanometer needle persists for a few minutes.

Ⅷ B Non-aqueous Titration

Non-aqueous titration is carried out in a non-aqueous solvent and used mainly for the determination of organic bases; organic salts of hydrochalic acid, phosphoric acid and sulfuric acid or organic acids and the alkali metal salts of organic acids, as well as some weak organic acids.

Non-aqueous Solvents

(1) *Acidic solvents* The relative alkalinity of weak organic bases can be remarkably enhanced in acidic solvents. The most commonly used acidic solvent is glacial acetic acid.

(2) *Basic solvents* The relative acidity of weak organic acids can be remarkably enhanced in basic solvents. The most commonly used basic solvent is dimethylformamide.

(3) *Amphiprotic solvents* They have the properties of acids and bases. The most commonly used amphiprotic solvent is methanol.

(4) *Aprotic solvents* They are neither acidic nor basic, such as benzene, chloroform etc.

Method 1
Unless otherwise specified, dissolve an accura-tely weighed quantity, equivalent to about 8 ml of perchloric acid (0.1 mol/L) VS, of the substance being examined in 10-30 ml of glacial acetic acid, add 1-2 drops of the indicator solution as specified in the monograph and titrate with perchloric acid (0.1 mol/L) VS. The colour change of the indicator should be checked by potentiometric method and a blank determination performed to make any necessary correction.
If the temperature at which the titration is performed differs by more than 10℃ from the temperature at which the perchloric acid VS was standardized, the titrant must be standardized again. If the difference does not exceed 10℃, the concentration of the titrant can be corrected as follows:

$$N_1=\frac{N_0}{1+0.0011(t_1-t_0)}$$

Where 0.0011 is the volume expansion coefficient of glacial acetic acid;
t_0 is the temperature at which perchloric acid VS was standardized;
t_1 is the temperature at which the titration is performed;
N_0 is the concentration of perchloric acid VS at t_0;
N_1 is the concentration of perchloric acid VS at t_1.

When the substance being examined is a salt of hydrohalic acids, the titration should be carried out after the addition of 3-5 ml of mercuric acetate TS. Phosphates and sulfates can be titrated directly, but in the case of sulfates, the reaction stops when bisulfate is formed. In the titration of nitrates, the end point should be determined by potentiometric method, because the indicator can be discoloured by nitric acid.
In non-aqueous potentiometric titration, the indicator electrode is a glass electrode and the reference electrode is a saturated calomel electrode using a saturated solution of potassium chloride in dehydrated methanol as the salt bridge.

Method 2
Unless otherwise specified, dissolve an accurately weighed quantity, equivalent to 8 ml of the titrant (0.1 mol/L), of the substance being examined in a solvent specified in the monograph, add 1-2 drops of the specified indicator solution and titrate with the specified basic titrant (0.1 mol/L). The colour change of the indicator should be checked by potentiometric method and a blank determination performed to make any necessary correction.
In the course of the titration, protect the solvent and titrant from atmospheric carbon dioxide and moisture, avoid the evaporation of the titrant.
The electrodes used in potentiometric titration is the same as that described in method 1.

Appendix Ⅸ

Ⅸ A Determination of Foreign Matter

Foreign matter consists of any or all of the following:
(1) The biological origin of which is the same as that specified in the monograph concerned but the appearance or botanical part is different.
(2) The biological origin of which differs from that specified in the monograph concerned.
(3) Foreign mineral matters such as stones, sand, lumps of soil.

Method (1) Weigh a quantity of substance being examined and spread out in a thin layer. Detect the foreign matter by inspection with eye or with lens (5-10×), or by the use of a suitable sieve, if necessary, to separate the foreign matter.
(2) Weigh separately each kind of foreign matter and calculate the percentage content.

Note (1) In some crude drugs where the foreign matter may closely resemble to the official drug, it may be necessary to use either microscopical, chemical or physical method to identify the foreign matter.
(2) Cut the big crude drugs and examine for the occurrence of insects, moulds and deterioration.
(3) The quantity of substance being examined for the determination of foreign matter is accordant with the method for the sampling of crude drugs (Appendix Ⅱ A), unless specified otherwise.

Ⅸ B Determination of Lead (Pb), Cadmium (Cd), Arsenic (As), Mercury (Hg) and Copper (Cu)

1. Atomic absorption spectrophotometry
This method is provided to determine the lead, cadmium, arsenic, mercury and copper in Traditional Chinese Medicinal substances using atomic absorption spectrophotometry (Appendix Ⅴ D). The following procedures are given unless specified otherwise.

(1) Determination of lead (graphite oven method)
①***Determination conditions*** Reference condition: dry temperature: 100-120℃, maintain 20 seconds; ash temperature: 400-750℃, maintain 20-25 seconds; atomic temperature: 1700-2100℃, maintain 4-5 seconds; measurement wavelength: 283.3 nm; background calibration: deuterium lamp (D lamp) or Zeeman effect.

②***Preparation of lead standard stock solution*** Measure accurately a quantity of lead single-element standard solution to prepare standard stock solution with 2% nitric acid solution, which containing 1 μg per ml, stored at 0-5℃.

③***Preparation of calibration curve*** Measure accurately a quantity of lead standard stock solutions respectively, diluted with 2% nitric acid solution to the concentration of 0, 5, 20, 40, 60, 80 ng per ml respectively. Measure respectively accurately 1 ml the above solution, add respectively 1 ml of 1% ammonium dihydrogen phosphate (ADP, $NH_4H_2PO_4$) and 0.2% magnesium nitrate [$Mg(NO_3)_2$], mix well, pipette accurately 20 μl to inject into the atomic generator of graphite oven and determine their absorbance, then draw the calibration curve with absorbance as vertical axis and concentration as horizontal ordinate.

④***Preparation of test solution***
Method A Weigh accurately 0.5 g of the coarse powder of the substance being examined, transferred into a Teflon slaking-tank, add 3-5 ml of nitric acid (HNO_3), mix well, soak overnight, cover the inner lid, screw down the outer coating, put into the suitable microwave slaking oven to slake (operate according to the instrumental specific slaking procedure). Then put the slaking tank on the electric hot plate, heat slowly until brown fumes are no longer evolved, and continuously concentrate slowly to 2-3 ml, cool, transferred to a 25 ml flask and diluted to volumn with water, shake well. Prepare synchronously the reagent blank solution according to the above method.

Method B Weigh accurately 1 g of the coarse powder of the substance being examined, transferred into a casparian flask, add 5-10 ml of the mixture of nitric acid (HNO_3) and perchloric acid ($HClO_4$) (4∶1), add a small hopper on the flask-top, macerate overnight, heat to slake on the electric hot plate, keep somewhat-boiling, if brownish-black, add again a quantity of the above mixture, continuously heat till the solution becomes clarifying and transparent, then raise temperature, heat continuously to thick smoke, till white smoke disperse, the slaked solution becomes colourless and transparent or a little yellow, cool, transfer it into a 50 ml volumetric flask, wash the container with 2% nitric acid solution (HNO_3), add the washing solution into the same volumetric flask, and dilute with the same solvent to the volumn, shake well. Prepare synchronously the reagent blank solution according to the above procedure.

Method C Weigh accurately 0.5 g of the coarse powder of the substance being examined, transferred into a porcelain crucible, charred at the low temperature on the electric hot plate to smokeless, transfered into the high temperature oven, ignite for 5-6 hours at 500℃ (if incomplete incineration observed add proper nitric acid (HNO_3), heat at the low temperature on the electric hot plate, repeat till completely ash.), take out and keep cool, dissolved with 5 ml of 10% HNO_3, transferred into a 25 ml volumetric flask, wash the container with water, add the washing solution into the same volumetric flask, and dilute to the volumn, shake well. Prepare synchronously the reagent blank solution according to the above method.

⑤***Determination*** Measure accurately 1 ml of the test solution and its corresponding reagent blank solution respectively, add 1 ml of solution containing 1%

$NH_4H_2PO_4$ and 0.2% $Mg(NO_3)_2$, shake well, pipette accurately 10-20 μl to determine their absorbance according to the above method of "Preparation of calibration curve", calculate the content of lead (Pb) in the test solution from the calibration curve.

(2) Determination of cadmium (Cd) (graphite oven method)

①Determination conditions Reference conditions: dry temperature: 100-120℃, maintain 20 seconds; ash temperature: 300-500℃, maintain 20-25 seconds; atomic temperature: 1500-1900℃, maintain 4-5 seconds; measurement wavelength: 228.8 nm, background calibration: deuterium lamp (D lamp) or Zeeman effect.

② Preparation of Cd standard stock solution Measure accurately a quantity of Cd single-element standard solution to prepare standard stock solution Cd with 2% HNO_3, which containing 0.4 μg per ml, stored at 0-5℃.

③Preparation of calibration curve Measure accurately a quantity of lead standard stock solution, diluted to the concentration of 1.6, 3.2, 4.8, 6.4 and 8.0 ng per ml with 2% HNO_3 respectively. Pipette accurately 10 μl the above solutions respectively, inject them into the graphite oven, determine their absorbance, and then draw the calibration curve with absorbance as vertical axis and concentration as horizontal ordinate.

④Preparation of test solution Reference to "Preparation of test solution" of Pb in the above.

⑤Determination Pipette accurately 10-20 μl of the test solution and its corresponding reagent blank solution respectively, determine their absorbance according to the above method of "Preparation of calibration curve" (if interference occurs, weigh accurately respectively 1 ml of the standard solution, blank solution and test solution, add 1 ml of a solution containing 1% $NH_4H_2PO_4$ and 0.2% $Mg(NO_3)_2$, shake well, determine their absorbance according to the method above, calculate the content of Cd in the test solution from the calibration curve.

(3) Determination of arsenic (As) (hydride method)

①Determination conditions Apparatus: suitable hydride generator device, reducing agent: a solution containing 1% sodium borohydride and 0.3% sodium hydroxide; carrier liquid: 1% hydrochloric acid; carrier gas: nitrogen; measurement wavelength: 193.7 nm, background calibration: deuterium lamp (D lamp) or Zeeman effect.

②Preparation of As standard stock solution Measure accurately a quantity of As single-element standard solution to prepare standard stock solution with 2% nitric acid solution (HNO_3), which containing 1.0 μg per ml As, stored at 0-5℃.

③Preparation of calibration curve Measure accurately proper quantities of arsenic standard stock solution, diluted with 2% HNO_3 to the concentration of 2,4,8,12, and 16 ng per ml respectively. Accurately transfer 10 ml of each into 25 ml volumetric flask respectively, add 1 ml of 25% potassium iodide solution (prepared prior to use), shake well, add 1 ml of ascorbic acid solution (prepared prior to use), shake well, dilute with hydrochloric acid solution (20→100) to the volumn, shake well, close the stopper and immerse the flask in a water bath at 80℃ for 3 minutes. Cool, transfer proper quantities of each solution respectively into the hydride generator device, determine the absorbance, then plot the calibration curve with peak area (absorbance) as vertical axis and concentration as horizontal ordinate.

④Preparation of test solution Reference to A or B method of "Preparation of the test solution" of Pb in the above.

⑤ Determination Pipette accurately 10 ml of the test solution and its corresponding reagent blank solution respectively, proceed as described under "Preparation of calibration curve" beginning at the words "add 1 ml of 25% potassium iodide solution". Calculate the content of As in the test solution from the calibration curve.

(4) Determination of Mercury (Hg) (cold absorption method)

①Determination conditions Apparatus: suitable hydride generator device; reducing agent: a solution containing 0.5% sodium borohydride and 0.1% sodium hydroxide; carrier liquid: 1% hydrochloric acid; carrier gas: nitrogen; measurement wavelength: 253.6 nm; background calibration: deuterium lamp (D lamp) or Zeeman effect.

②Preparation of mercury standard stock solution Measure accurately a proper quantity of mercury single-element standard solution to prepare standard stock solution with 2% nitric acid solution, which containing 1.0 μg per ml Hg, stored at 0-5℃.

③Preparation of calibration curve Measure accurately 0, 0.1, 0.3, 0.5, 0.7 and 0.9 ml of mercury standard stock solution, transferred into a 50 ml volumetric flask respectively, add 40 ml of 4% sulfuric acid solution and 0.5 ml of 5% potassium permanganate solution, shake well, drop 5% hydroxylamine hydrochloride solution until the violet red just disappears, dilute with 4% sulfuric acid solution to the volumn, shake well. A quantity of each solution is injected to the hydride generator device, determine the absorbance, then plot the calibration curve with peak area (or absorbance) as vertical axis and concentration as horizontal ordinate.

④Preparation of test solution

Method A Transfer 0.5 g of the coarse powder of the substance being examined, accurately weighed, into a Teflon slaking-tank, add 3-5 ml of nitric acid (HNO_3), mix well, macerate overnight, cover the inner lid, screw firmly the outer coating, put it into the proper microwave slaking oven to slake (operate according to the instrumental specific slaking procedure). Then put the slaking-tank on the electric hot plate heat slowly until brown fumes are no longer evolved, and continuously concentrate slowly to 2-3 ml, cool, add a quantity of 4% sulfuric acid solution, 0.5 ml of 5% potassium permanganate solution, shake well, drop 5% hydroxylamine hydrochloride solution until the violet red just disappears, dilute with 4% sulfuric acid solution to 10 ml, shake well, centrifugate if necessary, the supernatant is used as the test solution. Prepare synchronally the reagent blank solution following the above procedure.

Method B Transfer 1 g of the coarse powder of the substance being examined, accurately weighed, into a casparian flask, add 5-10 ml of the mixed solution of nitric acid solution (HNO_3) and perchloric acid ($HClO_4$) (4 : 1), mix well, fix a small hopper on the flask-top, immerse overnight, heat to slake on the electric hot plate at 120-140℃ for 4-8 hours until slaking completely, cool, add a quantity of 4% sulfuric acid solution and 0.5 ml of 5% potassium permanganate solution, shake well, drop 5% hydroxylamine hydrochloride solution until the violet red just disappears dilute with 4% H_2SO_4 solution to 25 ml, shake well, centrifugate if necessary, the supernatant is used as the test solution. Prepare synchronally the reagent blank solute based on the same procedure.

⑤Determination Pipette accurately a quantity of the test solution and its corresponding reagent blank solution, respectively, proceed as described under "Preparation of calibration curve". Calculate the content of mercury (Hg) in the test solution from the calibration curve.

(5) Determination of Copper (flame method)

①Determination conditions Measurement wavelength: 324.7 nm; flame: air-acetylene flame; background calibration:

deuterium lamp (D lamp) or Zeeman effect.

②***Preparation of copper standard stock solution*** Measure accurately a proper quantity of copper single-element standard solution, to prepare the standard stock solution with 2% nitric acid solution, which containing 10 μg per ml Hg, stored at 0-5℃.

③ ***Preparation of calibration curve*** Measure accurately a quantity of copper standard stock solution, dilute with 2% HNO_3 solution to the concentrations of 0.05, 0.2, 0.4, 0.6 and 0.8 μg per ml respectively. Inject each standard solution into the flame and determine the absorbance, respective, then plot the calibration curve with absorbance as vertical axis and concentration as horizontal ordinate.

④***Preparation of the test solution*** Reference to "Preparation of the test solution" of Pb in the above.

⑤***Determination*** Pipette accurately quantities of the test solution and its corresponding reagent blank solution respectively, proceed as described under "Preparation of calibration curve". Calculate the content of Cu in the test solution from the calibration curve.

2. Inductively-coupled plasma mass spectrometry

This method is provided to determine arsenic, cadmium, lead, mercury and copper in Traditional Chinese Medicinal substances using inductively-coupled plasma mass spectrometer. The instrument consists of plasma ionization and quadrupole mass spectrometer. The plasma ionization is made up of sampling system, atomization device, atomizer chamber, quartz fire-cannulation, and sampling cone; mass spectrometer is made up of quadrupoles analyzer, detector and other components.

(1) *Preparation of reference stock solution* Measure accurately a quantity of arsenic, cadmium, lead and mercury single-element standard solution, into a volumetric flask respectively, and prepare respective stock solution of 1 μg per ml lead, 0.5 μg per ml arsenic, 1 μg per ml cadmium, 1 μg per ml mercury and 10 μg per ml copper with 10% nitric acid solution (HNO_3).

(2) *Preparation of reference solution* Measure accurately a quantity of reference stock solutions of lead, arsenic, cadmium and copper to prepare the mixture solution containing arsenic and lead with respective concentration of 0,1,5,10 and 20 ng per ml, cadmium with the concentration of 0,0.5,2.5,5 and 10 ng per ml and copper with the concentration of 0,50,100,200, 500 ng per ml with 10% HNO_3 solution. Measure accurately a quantity of mercury reference stock solution, diluted with 10% HNO_3 to the concentrations of 0,0.2,0.5,1,2 and 5 ng per ml. This solution should be prepared prior to use.

(3) *Preparation of internal standard solution* Measure precisely a quantity of single standard solution of germanium (Ge)、indium (In) and bismuth (Bi), prepare the mixture solution with their respective concentration of 1 μg per ml.

(4) *Preparation of test solution* Substances being examined are dried for 2 hours at 60℃, ground to coarse powder, weighed accurately 0.5 g of each, and put into the microwave slaking tank with the ability of pressurization and resistibility to elevated temperature, add 5-10 ml of HNO_3 (given severe reaction, lay aside till the reaction ceases). Close tightly and slake according to the instrumental requirements and relative procedures. After slaking completely, cool to the temperature of slaked solution lower than 60℃, take out the slaking-tank, cool, transfer the slaked solution into 50 ml volumetric flask, wash the slaking-tank with a little water three times and add them into the same flask, add 200 μl of 1 μg/ml aurum single-element standard solution, dilute to the volumn, shake well (If there is some deposit, get the supernatant after centrifugation).

Prepare the reagent blank solution according to the same procedure except not adding aurum single-element standard solution.

(5) *Determination* The chosen isotopes to detect are ^{63}Cu, ^{75}As, ^{114}Cd, ^{202}Hg and ^{208}Pb. Select ^{72}Ge as the internal standard of ^{63}Cu、^{75}As, ^{115}In as the internal standard of ^{114}Cd, ^{209}Bi as the internal standard of ^{202}Hg and ^{208}Pb, and correct the detected elements by choosing the suitable correction equation according to the requirements of different instruments.

Insert the internal standard sampling pipe of instrument in the internal standard solution during the analyzing, while insert the sampling pipe in turn into the different concentrations control solutions and detect. Plot the calibration curve with the detected values (mean value of three readings) as vertical axis and concentrations as horizontal ordinate. Insert the sampling pipe into the test solution, detect and get the average value of three readings. Calculate the corresponding concentrations from the calibration curve, subtract the concentrations of the corresponding blank solutions, and then obtain the content of the above elements respectively.

Ⅸ C Limit Test for Chlorides

Test preparation Unless otherwise specified, weigh a quantity of the substance being examined as prescribed under individual monographs, dissolve it in about 25 ml of water (if the solution is alkaline, neutralize with nitric acid dropwise). Add 10 ml of dilute nitric acid and filter if necessary, transfer the solution to a 50 ml Nessler cylinder, add water to produce 40 ml and mix well.

Reference preparation Transfer a volume of sodium chloride standard solution as prescribed under individual monographs to a 50 ml Nessler cylinder, add 10 ml of dilute nitric acid and sufficient water to produce 40 ml, mix well.

Procedure To each of the Nessler cylinders described above add 1.0 ml of silver nitrate TS, dilute with water to 50 ml and mix well. Allow to stand in the dark for 5 minutes, compare the opalescence produced by viewing down the vertical axis of the cylinders against a black background.

If the test preparation is coloured, unless otherwise specified, place two aliquots of the test preparation in Nessler cylinders separately, to one cylinder add 1.0 ml of silver nitrate TS, mix and allow to stand for 10 minutes, filter the content of the cylinder repeatedly until the filtrate is perfectly clear, then add the prescribed volume of standard sodium chloride solution to the filtrate, use it as the reference preparation. To the other cylinder add 1.0 ml of silver nitrate TS, use it as the test preparation. Dilute the test preparation and the reference preparation with water to 50 ml, mix well and allow to stand in the dark for 5 minutes, compare the opalescence as described above.

Sodium chloride standard solution Dissolve 0.165 g of sodium chloride in water in a 1000 ml volumetric flask, and dilute to the volume, mix well (stock solution). Transfer 10 ml of the stock solution, accurately measured, into a 100 ml volumetric flask immediately before use, dilute with water to the volume and mix well (each ml is equivalent to 10 μg of Cl).

Annotations The filter paper used in this test, if necessary, should be previously washed with water containing nitric acid

until the washing is free from chlorides.

Ⅸ D Limit Test for Iron

Unless specified otherwise, dissolve a quantity of the substance being examined as described under individual monographs in water to 25 ml. Transfer the solution to a 50 ml Nessler cylinder, add 4 ml of dilute hydrochloric acid and 50 mg of ammonium persulfate. Dilute with water to about 35 ml, add 3 ml of 30% ammonium thiocyanate solution and sufficient water to produce 50 ml, mix well. Compare the colour produced with that of a reference preparation containing a volume of standard iron solution as prescribed under individual monographs and subjected to the same treatment.

If the colour of the test preparation is of a different shade as compared with that of the reference preparation, transfer each preparation to a separator and extract with 20 ml of *n*-butanol. Transfer each of the *n*-butanol layers to a 50 ml Nessler cylinder, add *n*-butanol to 25 ml and compare the colour of the two solutions.

Iron standard solution Dissolve 0.863 g of ferric ammonium sulfate $FeNH_4(SO_4)_2 \cdot 12H_2O$, accurately weighed, in water in a 1000 ml volumetric flask, add 2.5 ml of sulfuric acid, dilute with water to volume and mix well. This is the stock solution.

Transfer 10 ml of the stock solution, accurately measured, to a 100 ml volumetric flask immediately before use, add water to volume and mix well (each ml is equivalent to 10 μg of Fe).

Ⅸ E Limit Test for Heavy Metals

The term "heavy metals" refers to those metals that react with thioacetamide or sodium sulfide under the specified conditions to produce a coloured compound.

Lead standard solution Dissolve 0.160 g of lead nitrate in 5 ml of nitric acid and 50 ml of water in a 1000 ml volumetric flask, dilute to volume with water, mix well (stock solution).

Transfer 10 ml of the stock solution, accurately measured, to a 100 ml volumetric flask, dilute with water to volume and mix well (each ml is equivalent to 10 μg of Pb). This solution should be prepared immediately before use.

All glassware used for the preparation and preservation of standard lead solution should be free from lead.

Method 1

Unless otherwise specified, use two 25 ml Nessler cylinders. To cylinder A add the specified volume of lead standard solution and 2 ml of acetate BS (pH 3.5), dilute with water or other solvent as specified under individual monographs to 25 ml. To cylinder B add 25 ml of the test preparation containing a quantity of the substance being examined as specified under individual monographs.

If the original test preparation is coloured, it may be matched by the addition of a few drops of dilute caramel solution or other suitable solution to cylinder A.

To each cylinder add 2 ml of thioacetamide TS and mix well, allow to stand for 2 minutes, compare the colour produced by viewing down the vertical axis of the cylinders against a white background. The colour produced in cylinder B is not more intense than that produced in cylinder A.

If the colour cannot be matched by the addition of caramel solution, dissolve the double amount of the substance being examined and the reagent, in water or other solvent as specified under individual monographs to produce 30 ml of test preparation. Divide the test preparation into two equal portions and transfer to Nessler cylinders A and B. To cylinder B add sufficient water or other solvent as specified under individual monographs to produce 25 ml. To cylinder A add 2 ml of thioacetamide TS, mix well and allow to stand for 2 minutes, filter through filter membrane of 3 μm in porosity. To cylinder A add the prescribed volume of lead standard solution and dilute with water of other solvent as specified under individual monographs to produce 25 ml. Then add 2 ml of thioacetamide TS to cylinder B and 2 ml of water to cylinder A and compare the colour as described above.

If the substance being examined contains a ferric salt which interferes with the test, 0.5-1.0 g of ascorbic acid should be added to each cylinder.

Unless otherwise specified, evaporate the same quantity of the same reagents to dryness in a porcelain dish. Dissolve the residue in 2 ml of acetate buffer (pH 3.5) and 15 ml of water. Transfer the solution to a Nessler cylinder, add the specified quantity of lead standard solution and water to 25 ml. The solution is used as reference solution for the test solution which is prepared by using more than 1.0 ml of hydrochloric acid or equivalent amount of dilute hydrochloric acid, 2 ml of ammonia TS or by treating with other reagents.

Method 2

Unless specified otherwise, use the residue obtained from the Determination of Residue on Ignition, add 0.5 ml of nitric acid, evaporate to dryness, heat until nitrous oxide fumes are no longer evolved (or alternatively, ignite a quantity of the substance being examined in a crucible until thoroughly charred, cool, moisten the residue with 0.5-1.0 ml of sulfuric acid, ignite at a low temperature until sulfurous acid fumes are no longer evolved, add 0.5 ml of nitric acid, evaporate to dryness, heat until nitrous oxide fumes are no longer evolved and ignite at 500-600℃ until the incineration is complete). Cool, add 2 ml of hydrochloric acid, evaporate to dryness on a water bath, add 15 ml of water, followed by ammonia TS dropwise until the solution is neutral to phenolphthalein IS, then add 2 ml of acetate BS (pH 3.5) and warm to effect dissolution. Transfer the resulting solution to Nessler cylinder B, dilute with water to 25 ml and proceed as described under method 1. The reference preparation should be prepared as follows. Place the same quantity of the same reagents used for the preparation of test solution in a porcelain dish and evaporate to dryness, heat gently to dissolve in 2 ml of acetate BS (pH 3.5) and 15 ml of water, transfer to the Nessler cylinder A and add the specified volume of standard lead solution, dilute with water to 25 ml.

Method 3

Unless otherwise specified, dissolve a quantity of the substance being examined in 5 ml of sodium hydroxide TS and 20 ml of water. Transfer the solution to a Nessler cylinder, add 5 drops of sodium sulfide TS and mix well, the colour produced is not more intense than that of a reference preparation containing the specified volume of lead standard solution and treated in the same manner.

Method 4

Apparatus The filter holder is composed of tightly sealed upper and lower parts with screw thread, washer, filter membrane and nylon pad web (as Fig. 13).

Lead standard stain Measure accurately a quantity of lead

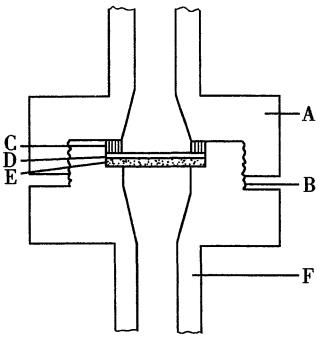

Fig. 13

A is the upper cap part of the filter holder, the entrance may be fitted with a 50 ml syringe; B is joint; C is washer (external diameter is 10 mm, internal diameter is 6 mm); D is filter membrane with 10 mm in diameter and 3.0 μm of porosity, soaked in water for more than 24 hours before use; E is nylon pad web (porosity diameter is not required) with 10 mm in diameter; F is the lower part of the filter holder, the exit is fitted with a suitable rubber tube

standard solution to a small beaker, dilute to 10 ml with water or other solvent as specified under individual monographs, add 2 ml of acetate BS (pH 3.5) and 1.0 ml of thioacetamide TS, mix well, allow to stand for 10 minutes. Transfer to the above filter holder with a 50 ml syringe and filter it on applying an even pressure (filter rate is about 1 ml per minute), then place the filter membrane on a piece of filter paper and dry it.

Procedure Transfer 10 ml of the test preparation prepared as described under individual monographs and proceed as described under Lead standard stain, beginning with the words "add 2 ml of acetate BS (pH 3.5)". Any stain produced is not more intense than the standard stain.

If the test preparation is coloured or turbid, filter it previously with filter membrane. If the filter membrane is contaminated, replace it with another filter membrane and repeat the filtration until the filter membrane remains uncontaminated. Proceed as described under Lead standard stain, beginning at the words "add 2 ml of acetate BS (pH 3.5)", using 10 ml of filtrate, and compare the stain as described above.

IX F Limit Test for Arsenic

Arsenic standard solution Dissolve 0.132 g of arsenic trioxide in 5 ml of 20% sodium hydroxide solution in a 1000 ml volumetric flask, neutralize with dilute sulfuric acid and add 10 ml in excess, dilute with water to volume and mix well, as a stock solution.

Transfer 10 ml of the stock solution, accurately measured, to a 1000 ml volumetric flask immediately before use, add 10 ml of dilute sulfuric acid, dilute with water to volume and mix well (each ml is equivalent to 1 μg of As).

Method 1 (Gutzeit's method)

Apparatus As Fig. 14. A is a 100 ml conical flask with standard ground joint; B is a standard hollow ground glass stopper connected to glass conduit C (external diameter 8.0 mm, internal diameter 6.0 mm), the total length of B and C is about 180 mm, D is a plastic screw, the upper part of which has an aperture 6.0 mm in diameter and the lower part of which has an aperture 8.0 mm in diameter; E is a plastic screw cap which has an aperture 6.0 mm in diameter. A wad of lead acetate cotton wool weighing about 60 mg is packed into tube C to a depth of about 60-80 mm. A disc of mercuric bromide test paper is placed between the contacting surfaces of D and E.

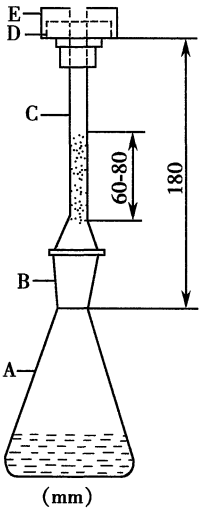

Fig. 14

Arsenic standard stain Place 2 ml of standard arsenic solution, accurately measured, in flask A, add 5 ml of hydrochloric acid and 21 ml of water. Then add 5 ml of potassium iodide TS and 5 drops of acid stannous chloride TS, allow to stand at room temperature for 10 minutes and add 2 g of zinc granules. Insert the stopper B and conduit C into the mouth of flask A and immerse the flask in a water bath at 25-40℃ for 45 minutes. Remove the mercuric bromide test paper.

Use arsenic standard solution instead of the substance being examined and treat it in the same manner described under the individual monographs, prepare arsenic standard stain as described above, if the substance being examined needs to be destroyed organically before carrying out the limit test for arsenic.

Procedure Transfer the test preparation prepared as described under individual monographs to flask A and proceed as described under Arsenic standard stain, beginning with the words "Then add 5 ml of potassium iodide TS". Any stain produced is not more intense than the standard stain.

Method 2 (Silver diethyldithiocarbamate method)

Apparatus As Fig. 15. A is a 100 ml conical flask with standard ground joint; B is a standard hollow ground glass stopper connected to glass conduit C (at one end, the external diameter is 8.0 mm and the internal diameter is 6.0 mm; the other end is in length of 180 mm, in external diameter of 4 mm and in internal diameter of 1.6 mm, the internal diameter of sharp end is 1 mm). D is a glass tube with flat bottom (length 180 mm, internal diameter 10 mm, and with a graduation at 5.0 ml). A wad of cotton wool previously moistened with lead acetate TS and dried weighing about 60 mg is packed into conduit C to a depth of about 80 mm, and measure accurately 5 ml of silver diethyldithiocarbamate TS in tube D.

Standard arsenic reference solution Transfer 5 ml of arsenic standard solution as described under Method 1 to flask A, accurately measured, add 5 ml of hydrochloric acid and 21 ml of water. Then add 5 ml of potassium iodide TS and 5 drops of acid stannous chloride TS, allow to stand at room temperature for 10 minutes and add 2 g of zinc granules. Connect conduit C into flask A immediately, and allow the

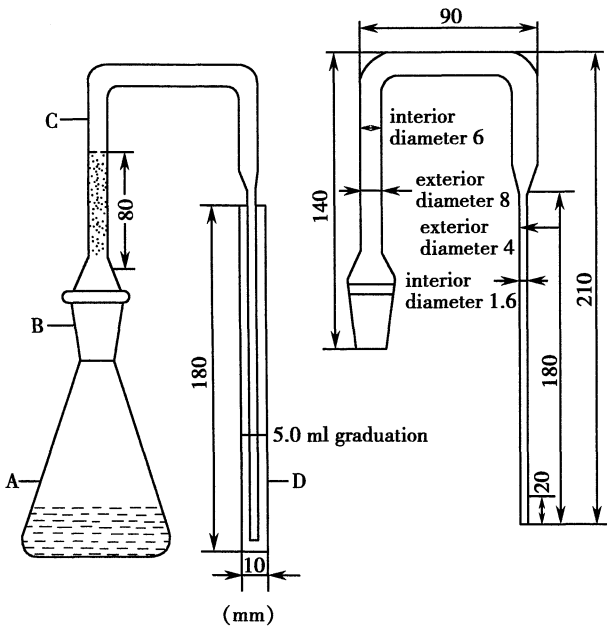

Fig. 15

evolved arsine to enter tube D. Immerse the flask A in a water bath at 25-40℃ for 45 minutes. Remove tube D, add chloroform to the graduation, mix well.

Use arsenic standard solution instead of the substance being examined and treat in the same manner described under the individual monographs, prepare arsenic standard stain as described above, if the substance being examined needs to be destroyed organically before carrying out the limit test for arsenic.

Procedure Transfer the test preparation prepared as described under individual monographs to flask A and proceed as described under standard arsenic reference solution, beginning with the words "Then add 5 ml of potassium iodide TS..." .

Compare the above two solutions against a white background. Any colour produced by the test preparation is not more intense than that produced by the standard arsenic reference solution. If necessary, determine the absorbance at the wavelength of 510 nm, using silver diethyldithiocarbamate TS as the blank (Appendix Ⅴ A).

Annotations (1) Make sure that a blank test produces no arsenic stain or only a barely visible stain.

(2) The preparation of standard stain and test stain must be carried out concommitantly.

(3) The zinc granules should be arsenic free and the size is such that they will pass through a No. 1 sieve. The quantity used should be increased and the reaction time should be extended up to 1 hour, if the granules are of larger size.

(4) Lead acetate cotton wool is prepared by immersing 1.0 g of absorbent cotton in 12 ml of a mixture of equal volumes of lead acetate TS and water. Drain off excess liquid and make the cotton wool fluffy, allow it to dry at a temperature below 100℃ and preserve in a well closed glass container.

Ⅸ G Determination of Loss on Drying

Mix the substance being examined thoroughly, if it is in the form of large crystals, reduce them to a size of about 2 mm by crushing. Place 1 g or the amount specified under individual monographs of the substance being examined in a tared, shallow weighing bottle, previously dried to constant weight under the conditions specified in individual monographs, unless otherwise directed.

The substance being examined should be evenly distributed to form a layer of not more than 5 mm in thickness, or not more than 10 mm in the case of bulky material. When the loaded bottle is placed in the drying chamber of desiccator, remove the stopper and put it beside the bottle, or leave it on the bottle in half open position. Upon the opening of the drying chamber or desiccator, the bottle should be closed promptly. If the substance is dried by heating, allow it to cool to room temperature in a desiccator before weighing.

If the substance melts at a lower temperature than the specified drying temperature, maintain the bottle with its content below the melting temperature until most of the water is removed, then dry it under the specified conditions.

If a vacuum desiccator or constant temperature vacuum desiccator is to be used, a pressure of 2.67 kPa (20 mmHg) or less should be maintained unless otherwise directed. The desiccants used in a desiccator are usually anhydrous calcium chloride, silica gel or phosphorus pentoxide. Phosphorus pentoxide is often used in a constant temperature vacuum desiccator. The desiccants should be kept fully effective.

Ⅸ H Determination of Water

The substance being examined is usually broken into granules or pieces with less than 3 mm in diameter. The substances which have less than 3 mm in length and diameter, can be examined without further breaking. The substance being examined using the drying method under reduced pressure has to pass through a No. 2 sieve.

Method 1 (Drying in oven method)

The method is used for the determination of water in crude drugs containing no or scarcely any volatile constituents.

Measurement Place 2-5 g of substance being examined in a flat weighing bottle which is previously dried to constant weight to form a smooth layer not exceeding 5 mm in thickness, or not exceeding 10 mm in thickness for substance of loose texture and then weigh accurately. Dry in an oven at 100-105℃ for 5 hours with the stopper of the bottle removed. Upon opening the oven, close the bottle promptly and allow it to cool in a desiccator for 30 minutes. Weigh accurately and dry it again under similar condition for 1 hour, cool and weigh. Repeat the operation until the difference between two successive weighings is not more than 5 mg. Calculate the percentage content of water in the substance being examined according to the weight loss on drying.

Method 2 (Toluene distillation method)

The method is used for the determination of water in crude drugs containing volatile constituents.

Apparatus As Fig. 16, the apparatus consists of a 500 ml round bottom flask (A), a graduated receiving tube (B) and a reflux condenser (C) approximately 40 cm in length. All parts of the apparatus should be cleaned and dried in an oven.

Measurement Place a quantity of the substance being examined which is anticipated to yield about 1-4 ml of water and accurately weighed, in the flask A, add about 200 ml of toluene and a few glass beads if necessary. Assemble the apparatus and fill the receiving tube B with toluene through the condenser. Heat the flask gently, when toluene begins

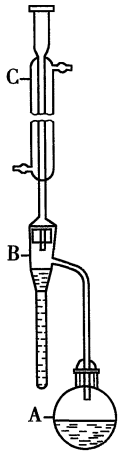

Fig. 16

to boil, adjust the temperature and allow to distill at a rate of 2 drops per second. When the volume of water in the receiving tube does not increase any more, rinse the inside of condenser with toluene and push down the toluene adhering to the wall with a brush or other suitable tools. Continue the distillation for 5 minutes, cool to room temperature and disconnect the apparatus. Push down any droplet of water adhering to the wall of the receiving tube with a copper wire wetted with toluene. Allow to stand until water is completely separated from toluene in the receiving tube (a small amount of methylene blue may be added to facilitate observation). Record the volume of water distilled and calculate the percentage of water in the substance being examined.

Annotations When the chemical pure grade toluene is used for direct determination, if necessary, add a small amount of water into the toluene, fully shake it and stand still, discard the water after separation and use the toluene after distillation.

Method 3 (Drying under reduced pressure method)
The method is used for determination of water in noble crude drugs containing volatile constituents.

Vacuum desiccator Distribute 0.5-1 cm depth of phosphorous pentoxide into a Petri dish of 12 cm in diameter and put the dish in a vacuum desiccator of 30 cm in diameter.

Procedure Mix thoroughly 2-4 g of the substance being examined. Weigh accurately 0.5-1 g in a tared weighing bottle, previously dried to constant weight under the same conditions to be employed in the determination. Place the loaded bottle in the vacuum desiccator, remove the stopper of the bottle and leave it also in the desiccator. Reduce the pressure of the desiccator by suction to 2.67 kPa (20 mmHg) and last for 30 minutes. Allow to stand in room temperature for 24 hours. Open the stopper cork and connect an anhydrous calcium chloride tube at the air inlet. Upon opening the desiccator, close the bottle promptly and weigh accurately. Calculate the percentage content of water in the substance being examined according to the weight loss on drying.

Method 4 (Gas chromatographic method)
Chromatographic system suitability Carry out the method for gas chromatography, using porous polymer beads of ethylvinylbenzene cross-linked with divinylbenzene 0.25-0.18 mm in diameter as the support; maintain the column temperature at a range of 140-150℃, determinate with thermal conductivity detector. The performance of the instrument should comply with following requirements.
(1) The number of theoretical plate of the column calculated with peak of water should be more than 1000, while the number of theoretical plate of the column calculated with peak of ethanol should be more than 150.
(2) The resolution of the peaks of water and ethanol is more than 2.
(3) Carry out 5 replicate injections with absolute ethanol, the RSD of the peak area of water should not be more than 3.0 per cent.

Reference solution preparation Place about 0.2 g of purified water, weigh accurately, add absolute ethanol to make 25 ml, mix well.

Test solution preparation Place sufficient test sample (containing about 0.2 g water), Shear and crush or porphyrize it weigh accurately, place in a conical flask, add absolute ethanol 50 ml accurately and mix well. Ultrasonicate for 20 minutes and allow to stand for 12 hours, then ultrasonicate for another 20 minutes and place airtightly. After the solution becomes clarified. The supernatant liquid is used as test solution.

Procedure Measure accurately 1-5 μl of absolute ethanol, reference solution and test solution respectively, inject it into the column, determine and calculate the content.

Annotations (1) Use the reagent with the same batch number when preparing the reference solution and the test solution. The water contained should be deducted.
(2) The external standard method is used to calculate the water content. Since absolute ethanol is used as solvent, and the method of deducting water content in the reagent performances as follow:
Peak area of water practically added into the reference solution = the total peak area of ethanol in the reference solution − K × peak area of ethanol in the reference solution.
Peak area of water in test solution = the total peak area of water in test solution − K × peak area of ethanol in test solution.

$$K=\frac{\text{Peak area of water in absolute ethanol}}{\text{Peak area of ethanol in absolute ethanol}}$$

Ⅸ J Determination of Residue on Ignition

Place 1.0-2.0 g or the quantity specified under individual monographs of the substance being examined, accurately weighed, in a suitable crucible (If the substance being examined contains alkali metals or fluorine element, the platinum crucible should be used). Previously ignited to constant weight. Heat gently until it is thoroughly charred, cool and moisten the residue with 0.5-1 ml of sulfuric acid, unless otherwise directed. Heat gently until white fumes are no longer evolved and then ignite at 700-800℃ until the incineration is complete. Cool in a desiccator and weigh accurately, ignite again at 700-800℃ to constant weight.
If the residue is to be used in the limit test for heavy metals, the ignition temperature should be controlled at 500-600℃.

Ⅸ K Determination of Ash

1. Total ash Pulverize the material being examined, pass through No. 2 sieve, mix well. Place 2-3 g (3-5 g for the

determination of acid-insoluble ash) of powdered drug in a tared crucible, weigh accurately (to nearest 0.01 g), ignite slowly till the sample is completely carbonized, keep it from burning with care, raise the temperature gradually to 500-600℃, incinerate to constant weight and the ash is carbon-free. Calculate the percentage of ash with reference to the air-dried drug.

If a carbon-free ash cannot be obtained in this way, cool the crucible and moisten the residue with hot water or 2 ml of 10% ammonium nitrae solution. Evaporate to dryness on a water bath, ignite the residue as above until carbon-free ash is obtained.

2. Acid-insoluble ash Place the ash obtained in the determination of total ash in a crucible, add 10 ml of dilute hydrochloric acid with great care, cover with a watch glass, heat on a water bath for 10 minutes. Rinse the watch glass with 5 ml of hot water and add the rinsings to the crucible, filter with an ashless filter paper, transfer the residue to the filter paper with water, wash till the filtrate yields no reactions of chlorides. Transfer the filter paper together with the residue to the original crucible, dry and ignite to constant weight. Calculate the percentage of acid-insoluble ash with reference to the air-dried drug.

Ⅸ L Determination of Nitrogen

Method 1 (Macro Method) Place an accurately weighed quantity of the substance being examined equivalent to about 25-30 mg of nitrogen in a 500 ml Kjeldahl flask. Solid or semi-solid substances may be wrapped in a sheet of nitrogen-free filter paper and then transfered to the Kjeldahl flask. Add successively 10 g of potassium sulfate or anhydrous sodium sulfate, 0.5 g of powdered cupric sulfate and then add slowly 20 ml of sulfuric acid along the inner wall of the Kjeldahl flask inclined at an angle of 45℃. Heat the mixture gently, keep the temperature below boiling point until frothing subsides. Raise the temperature and boil the mixture briskly until a clear, green solution is obtained. Continue the heating for 30 minutes, unless otherwise specified. Cool, add cautiously 250 ml of water along the inner wall of the flask, mix well and allow to cool. Add 75 ml of 40% sodium hydroxide solution along the inner wall of the flask to form a layer beneath the acid solution. Add a few pieces of zinc granules, connect one end of a nitrogen bulb to the flask and the other end to a condenser. To a 500 ml conical flask add 50 ml of 2% boric acid solution and 10 drops of a mixed methyl red-bromocresol green IS. Dip the end of the condenser into the boric acid solution, mix the contents of the Kjeldahl flask by gentle rotation and distil. When 250 ml of distillate is collected, draw the end of the condenser above the surface of the distillate. Continue the distillation for about 1 minute and rinse the tip of the condenser with water. Titrate the distillate with sulfuric acid (0.05 mol/L) VS until the colour changes from bluish green to greyish-violet. Perform a blank determination and make any necessary correction. Each ml of sulfuric acid (0.05 mol/L) VS is equivalent to 1.401 mg of N.

Method 2 (Semi-micro Method) The distillation plant (as Fig. 17). The apparatus consists of a 1000 ml round bottom flask A, a safety tube B, a distillator C with a nitrogen bulb, a funnel D, a condenser E and a 100 ml conical flask F. G and H are two clamps.

Add a few drops of methyl red IS and a quantity of water in flask A and acidify with dilute sulfuric acid, add a few pieces

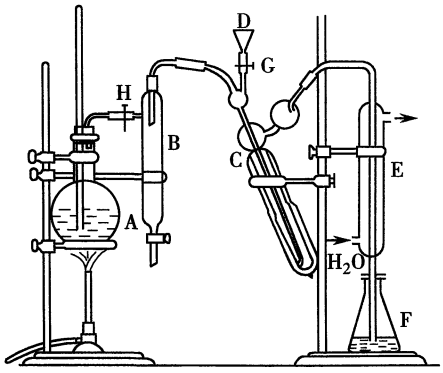

Fig. 17

of glass beads or zeolite and connect flask A to tube B. To distillator C add about 50 ml of water through funnel D, close clamp G, turn on the condensation water and heat the water in flask A to boiling. Stop heating when water vapour condenses and drips out of the condenser. The water in distillator C backflushes to tube B on the closure of clamp H. Open clamp G and drain the water in tube B. Close the stopcock of tube B and clamp G, dip the end of the condenser into about 50 ml of water which backflushes to C and B in turn, again drain the water in tube B. Repeat this process 2-3 times so that the apparatus inside is washed clean.

Place an accurately weighed quantity of the substance being examined equivalent to 1.0-2.0 mg of nitrogen in a 30-50 ml Kjeldahl flask, add 0.3 g of potassium sulfate or anhydrous sodium sulfate and 5 drops of 30% cupric sulfate solution, then add dropwise 2.0 ml of sulfuric acid along the wall of the flask. Place a funnel on top of the Kjeldahl flask inclined at an angle of about 45°, heat the mixture gently, keep the temperature below boiling point until frothing subsides. Raise the temperature and boil the mixture briskly until a clear, green liquid is obtained. Continue the heating for 10 minutes more, unless otherwise specified, allow to cool and add 2 ml of water.

To the conical flask F add 10 ml of 2% boric acid solution and 5 drops of a mixed methyl red-bromocresol green IS. Dip the end of the condenser into the boric acid solution. Transfer the content of the Kjeldahl flask into the distillator C through funnel D, rinse the Kjeldahl flask and funnel several times with small amounts of water. Add 10 ml of 40% sodium hydroxide solution and again wash the funnel several times with small amounts of water. Close clamp G and heat the water in flask A and distil with steam until the colour of the boric acid solution changes from red to bluish green. Continue the distillation for 10 minutes more, lift the end of the condenser above the surface of the distillate, flash the condenser with steam for about 1 minute and stop the distillation and wash the tip of the condenser with water.

Titrate the distillate with sulfuric acid (0.005 mol/L) VS until the colour changes from bluish green to greyish violet. Perform a blank determination and make any necessary correction (the volume of distillate collected in the blank determination should be approximately the same as that collected in the determination made with the substance being examined, i.e. about 70-75 ml). Each ml of sulfuric acid 0.005 mol/L VS is equivalent to 0.1401 mg of N. The amount of sulfuric acid should be increased when the substance being examined is more than 0.1 g so as to make the digestion complete, and the amount of sodium hydroxide solution should also be increased proportionally.

Ⅸ M Determination of Ethanol

The gas chromatographic method (Appendix Ⅵ E) is used for the determination of the content expressed in percentage (ml/ml) of ethanol (C_2H_5OH) in various preparations at 20℃, unless otherwise specified.

Chromatographic system suitability Measure accurately 4 ml, 5 ml, 6 ml of dehydrated ethanol, add separately 5 ml of *n*-propanol (as internal standard) and dilute with water to 100 ml, mix well (diluted further, if necessary). Carry out the method for gas chromatography (Appendix Ⅵ E), using porous polymer beads of ethylvinylbenzene cross-linked with divinylbenzene 0.25-0.18 mm in diameter as the support; maintain the column temperature at a range of 120-150℃.
The performance of the instrument complies with following requirements.
(1) The number of theoretical plates of the column is more than 700 calculated with reference to *n*-propanol.
(2) The resolution of the peaks of ethanol and *n*-propanol is more than 2.
(3) Carry out 5 replicate injections for each of the three solutions mentioned above, the relative standard variation of 15 correction factors is not more than 2.0%.

Procedure Measure accurately a quantity of the solution being examined (equivalent to 5 ml of ethanol) and 5 ml of *n*-propanol, dilute with water to 100 ml and mix well as the test preparation.
Measure accurately 5 ml each of dehydrated ethanol and *n*-propanol, maintained at 20℃ dilute with water to 100 ml and mix well as the standard preparation.
The standard preparation and the test preparation may be further diluted if necessary.
Carry out successively 3 injections of the standard preparation, followed by 3 injections of the test preparation at the above conditions. Calculate the mean value of the correction factor obtained from the 3 injections of the standard preparation, and the mean value of ethanol content obtained from the 3 injections of the test preparation.

Annotations (1) Be sure that no peak due to impurity corresponding to the internal standard appears in the chromatogram obtained from the test preparation in the absence of internal standard.
(2) The relative deviation of individual values of the correction factor and the ethanol content should not be more than 1.5% of their mean value respectively, otherwise the determination must be repeated.
(3) System suitability must comply with the requirements described above, when any supports are used.

Ⅸ N Tests of Fats and Fatty Oils

If a liquid sample being examined shows turbid owing to the separation of stearin, warm the container on a water bath at 50℃ until the sample melts to form a clear liquid. If it does not become clear on warming, centrifuge or filter through a dry filter with hot-water jacket. Mix while hot and not solidified, weigh as many portions as needed for the various determinations, using preferably a weighing bottle having a pipette dropper, or a weighing beaker having a glass spoon. Solid sample is previously melted at a temperature not more than 10℃ above its melting range, centrifuge or filter and then weigh.

Determination of relative density Carry out the method for Determination of Relative Density (Appendix Ⅶ A).

Determination of refractive index Carry out the method for Determination of Refractive Index (Appendix Ⅶ F).

Determination of melting range Carry out the method for Determination of Melting Point (Appendix Ⅶ C, method 2).

Determination of congealing point of fatty acids

(1) *Preparation of the fatty acids* Heat 75 g of 20% (g/g) solution of potassium hydroxide in glycerin and 50 g of the substance being examined, in a 800 ml beaker, at 150℃ with frequent stirring for about 15 minutes until saponification is complete. Cool to about 100℃, add 500 ml of freshly boiled water, stir and mix well, add slowly 50 ml of sulfuric acid solution (1→4), and heat the solution until the fatty acids separate clearly as a transparent layer. Transfer the fatty acids to another beaker while hot, wash the acids with freshly boiled water repeatedly until the washing shows yellow colour to methyl orange IS. Collect the clear fatty acids in a dry small beaker while hot, add 5 ml of dehydrated ethanol, mix well and heat gently until there is no small bubbles evolved.

(2) *Determination of congealing point* Carry out the method for Determination of congealing point (Appendix Ⅶ D), using the dry fatty acid obtained above.

Determination of acid value Acid value is the number of mg of potassium hydroxide required to neutralise the free acid in 1 g of fat, fatty oil or other related substances. In its determination, sodium hydroxide (0.1 mol/L) VS may also be used.

Presumed acid value	Quantity of substance being examined/g
0.5	10
1	5
10	4
50	2
100	1
200	0.5
300	0.4

Unless otherwise specified, weigh accurately a quantity of the substance being examined as indicated in the above table, in a 250 ml conical flask, add 50 ml of a mixture of ethanol-ether (1 : 1) which has been neutralised to 1.0 ml of phenolphthalein IS with sodium hydroxide (0.1 mol/L) VS before use, shake to effect the solution (heat under reflux gently, if necessary, until the substance is completely dissolved). Titrate the resulting solution with sodium hydroxide (0.1 mol/L) VS until a pink colour which persists for 30 seconds is obtained. Take the number of ml of sodium hydroxide (0.1 mol/L) VS required as A and weight of substance being examined (g) as W, calculate the acid value from the expression:

$$\text{Acid value}=\frac{A\times 5.61}{W}$$

Use semi-micro burette of 10 ml in capacity for the titration when the acid value is less than 10.

Determination of saponification value The saponification

value is the number of mg of potassium hydroxide required to neutralise and saponify the free acids and esters contained in 1 g of fat, fatty oil or other related substances. Weigh accurately a quantity of the substance, equivalent to about 250/maximum saponification value of the substance, in a 250 ml conical flask, add 25 ml, accurately measured, of ethanolic potassium hydroxide (0.5 mol/L) VS, heat under reflux for 30 minutes, cool. Rinse the inner wall of condenser and the lower part of stopper with 10 ml of ethanol, add 1 ml of phenolphthalein IS, titrate with hydrochloric acid (0.5 mol/L) VS until the pink colour just disappears. Heat the solution to boiling, continue the titration if pink colour reappears. Note the volume (ml) of hydrochloric acid (0.5 mol/L) VS required in titration for the substance being examined as (*A*). Perform a blank determination and note the volume (ml) of hydrochloric acid (0.5 mol/L) VS required in blank determination as (*B*). Calculate the saponification value from the expression:

$$\text{Saponification value}=\frac{(B-A)\times 28.05}{W}$$

Where W is the weight of the substance being examined, g.

Determination of hydroxyl value The hydroxyl value is the number of mg of potassium hydroxide equivalent to the hydroxyl group contained in 1 g of the substance being examined after acetylation.

Presumed hydroxyl value	Quantity of substance being examined/g
10-100	2.0
100-150	1.5
150-200	1.0
200-250	0.75
250-300	0.60

Unless otherwise specified, weigh accurately a quantity of the substance being examined as indicated in the table, in a 250 ml dry glass stoppered conical flask, add 5 ml, accurately measured, of acetylation agent (prepared by dissolving 14.4 g of *p*-toluene-sulfonic acid in 360 ml of ethyl acetate in a 500 ml conical flask, then add slowly 120 ml of acetic anhydride, mix well and allow to stand for 3 days). Moisten the glass stopper with a small quantity of pyridine, stopper the flask tightly and shake gently to effect the solution. Place the flask in a water bath at 50℃±1℃ for 25 minutes (shake gently at every 10 minutes interval). Cool, add 20 ml of a mixture of pyridine-water (3 : 5). After 5 minutes, add 8-10 drops of cresol red-thymol blue mixed indicator solution, titrate with potassium hydroxide (or sodium hydroxide) (1 mol/L) VS until the colour of solution changes to grey-blue or blue. Note the volume (ml) of potassium hydroxide (or sodium hydroxide) (1 mol/L) VS required as *A*, perform a blank determination and note the volume (ml) of potassium hydroxide (or sodium hydroxide) (1 mol/L) VS required as *B*. Calculate the hydroxyl value from the expression:

$$\text{Hydroxyl value}=\frac{(B-A)\times 56.1}{W}+D$$

Where W is the weight of the substance being examined, g;
D is the acid value of the substance being examined.

Determination of iodine value Iodine value is the weight of iodine in g, required to halogenate 100 g of fat, fatty oil or other related substances. Weigh accurately a quantity of the substance (g), equivalent to 25/maximum iodine value of the substance being examined, in a 250 ml dry iodine flask. Dissolve it in 10 ml of chloroform, add 25 ml of iodine bromide solution, accurately measured, stopper the flask, mix well and allow to stand in a dark place for 30 minutes. Then add 10 ml of freshly prepared potassium iodide TS and 100 ml of water, mix well. Titrate with sodium thiosulfate (0.1 mol/L) VS with constant shaking until the colour changes to pale yellow, add 1 ml of starch IS, continue to titrate until the blue colour just disappears. Note the volume (ml) of sodium thiosulfate (0.1 mol/L) VS as *A*. Perform a blank determination, and note the volume (ml) of sodium thiosulfate (0.1 mol/L) VS as *B*. Calculate the iodine value from the expression:

$$\text{Iodine value}=\frac{(B-A)\times 1.269}{W}$$

Where W is the weight of the substance being examined, g.

Determination of peroxide value The peroxide value is the number that expresses in milliequivalents of active oxygen the quantity of peroxide contained in 1000 g of the substance. Unless otherwise specified, place accurately weighed 5 g of the substance being examined in a 250 ml iodine flask fitted with a ground-glass stopper. Add 30 ml of a mixture of 2 volumes of chloroform and 3 volumes of glacial acetic acid. Shake to dissolve the substance and add 0.5 ml of saturated potassium iodine TS. Shake for exactly 1 min, then add 30 ml of water. Titrate with sodium thiosulfate (0.01 mol/L) VS, adding the titrant slowly with continuous vigorous shaking, until the yellow colour is almost discharged. Add 5 ml of starch IS and continue the titration, shaking vigorously, until the blue colour is discharged. Note the volume (ml) of sodium thiosulfate (0.01 mol/L) VS as *A*. Carry out a blank test under the same conditions, and note the volume (ml) of sodium thiosulfate (0.01 mol /L) VS as *B* and weight of substance being examined (g) as *W*. The volume of sodium thiosulfate (0.01 mol/L) VS used in the blank titration must not exceed 0.1 ml. Calculate the peroxide value from the expression:

$$\text{peroxide value}=\frac{10(A-B)}{W}$$

Heating test Heat about 50 ml of the substance being examined, in a beaker, on a sand bath to about 280℃ at a rate of 10℃ per minute. Note the change in colour or other character of the oil.

Foreign matter Dissolve about 20 g, accurately weighed, in 20 ml of petroleum ether (boiling range 60-90℃), in a conical flask. Filter through a dry and weighed sinter-glass filter (if necessary, add more volume of petroleum ether to facilitate filtration). Wash the residue and filter with petroleum ether, dry to constant weight at 105℃ and weigh accurately. The weight increased represents the content of foreign matter in the substance being examined.

Water and volatile matter Weigh accurately about 5 g of the substance being examined in a bottle dried to constant weight previously, weigh accurately, dry at 105℃ for 40 minutes, allow to cool in desiccator and weigh accurately. Repeat the drying at 105℃ for further 20 minutes, cool and weigh again until the difference of two successive weighings is not greater than 0.001 g. The loss on drying is the content of water and volatile matter in the substance being examined.

Annotations *Preparation of iodine bromide solution*
Dissolve completely 13.0 g of powdered iodine in 1000 ml of glacial acetic acid by warming in a dry glass-stoppered flask. Add promptly 2.5 ml (or 7.8 g) of bromine, stopper the flask and mix well. In order to check the quantity of bromine added, two titrations may be performed.
(1) Before the addition of bromine, pipette 20.0 ml of the solution, titrate with sodium thiosulfate (0.1 mol/L) VS, note the volume (ml) required as *A*.
(2) After the addition of bromine, pipette 20.0 ml of the

solution, add 10 ml of freshly prepared potassium iodide TS, titrate with sodium thiosulfate (0.1 mol/L) VS, note the volume (ml) required as *B*. *B* is slightly less than 2 *A*. Iodine bromide solution should be kept in a well-closed container and protected from light.

Ⅸ O Determination of Swelling Capacity

Swelling capacity is an index to indicate the swelling property of drugs. It is defined as the volume (ml) of 1 g of dried drug swelled in water or in other specified solvent at a definite time and temperature. It is used mainly for the natural drugs containing mucilage, gelatin and semicellulose.

Procedure Weigh accurately (to the nearest 0.01 g) a definite quantity of drug being examined, pulverized if necessary, to a assay tube (160 mm in total length, 16 mm in inner diameter, 125 mm long in the graduated portion, graduated in 0.2 ml), add 25 ml of water or specified solvent at 20-25℃, stopper tightly, shake and allow to stand. Shake once in every ten minutes in the first hour, than allow to stand for 4 hours, read the volume of the sample after swelling, and read again after standing for 1 hour, until the volume difference is not more than 0.1 ml between two successive readings. Determine three samples for each drug, and calculate the average value (to the nearest 0.1 g) using the last reading of each determination from the following equation, in which *S* is the swelling capacity; *V* is the volume (ml) of a drug after swelling and *W* is the weight (g) of the drug calculated on the dried basis.

$$S=\frac{V}{W}$$

Where *S* is swelling capacity;
V is the swelling volume of the test sample (ml);
W is the weight of the test sample calculated.

Ⅸ P Limit Tests of Rancidity

Rancidity means that the complex chemical reaction occur and the decomposed components, for instance, free fatty acids, peroxides, and low molecular aldehydes and ketones are produced during the storage of fatty oils or seeds which contain fatty oils, turning up distinctive smell and influencing the sense properties and interior quality of the crude drugs.

This method check the rancidity of crude drugs through the determination of acid value, carbonyl value and peroxide value.

1. Extraction of fatty oil

Unless specified otherwise, pulverize 30-50 g of the seeds (varying in accordance with the content of fatty oil), then grind them into coarse powder, extract under reflux with 100-150 ml of hexane in a Soxhelt's extractor for 2 hours, stand for cool, filter through a No. 3 sintered funnel, recover the solvent to dryness in vacuum, and use the obtained fatty oil as the substance being examined.

2. Determination of rancidity

Determination of acid value Carry out the method for the tests of fats and fatty oils (Appendix Ⅸ N).

Determination of carbonyl value The carbonyl value is the millimole number of per kilogram carbonyl compounds contained in the test sample.

Unless specified otherwise, weigh accurately 0.02-0.5g of the substance being examined in a 25 ml volumetric flask, dissolve and dilute to volume with benzene and mix well. Measure accurately 5 ml in a 25ml stoppered tube, add 3 ml of a 4.3% solution of trichloroacetic acid in benzene and 5 ml of a 0.05% solution of 2, 4-dinitrophenylhydrazine in benzene, mix well and heat in a 60℃ water bath for 30 minutes. Stand to cool, add slowly 10ml of a 4% solution of potassium hydroxide in ethanol along the tube wall, stopper well, shake thoroughly for 1 minute and stand for 10 minutes. Carry out the method for spectrophotometry (Appendix Ⅴ A), determine the absorbances at 453 nm, and calculate according to the following equation:

$$\text{Carbonyl value}=\frac{A}{854\times G\times\frac{V_2}{V_1}}\times 1000$$

Where *A* is absorbance of the substance being examined;
G is weight of the test sample;
V_1 is total diluted volume of the substance being examined;
V_2 is volume of the solution being determined;
854 is average value of millimole number absorbance index of aldehydes.

Determination of peroxide value The peroxide value is the percentage of free iodine produced by the reaction of peroxide compounds with potassium iodide.

Unless specified otherwise weigh accurately 2-3 g of the substance being examined in 250 ml dried iodine flask, add 30 ml of a mixture of chloroform-glacial acetic acid (1∶1), dissolve the sample completely. Add accurately 1 ml of a freshly saturated solution of potassium iodide, stopper well, shake gently for 30 seconds, stand in a dark place for 3 minutes, and add 100 ml of water. Titrate with sodium thiosulfate VS (0.01 mol/L or 0.005 mol/L) until the colour changes to yellow, add 1ml of starch IS, continually titrate to the blue colour disappear, and perform a blank determination. Calculate the peroxide value according to the following equation:

$$\text{Peroxide value}=\frac{(A-B)\times C\times 0.1269}{G}\times 100$$

Where *A* is the volume of sodium thiosulfate VS (ml);
B is the volume of sodium thiosulfate VS for blank determination (ml);
C is the concentration of sodium thiosulfate VS (mol/L);
G is the weight of the substance being examined (g);
0.1269 is the weight (g) of iodine equivalent to 1 ml of sodium thiosulfate VS (1mol/L).

Ⅸ Q Determination of Pesticides Residue

The gas chromatographic method (GC) (Appendix Ⅵ E) is used for the determination of parts of organochlorine pesticides, organophosphorus pesticides and pyrethrins pesticides residue in medicinal substances and preparations, unless specified otherwise.

1. Determination of organochlorine pesticides residue

Chromatographic system and system suitability Use an elasticity quartz capillary column (0.25 μm in internal diameter, 0.32 mm in external diameter, and 30 meter long) bonded with 5% dipheny 95% dimethylpolysiloxane

(SE-54), or 14% cyanopropylphenyl-86% dimethylpolysiloxane (DB-1701), detect with ^{63}Ni-electron capture detector (ECD), maintain injector temperature at 230℃ and detector temperature at 300℃, inject split keep maintain initial oven temperature at 100℃, then ascend to 220℃ at 10℃ per minute, then ascend to 250℃ at 8℃ per minute. hold for 10 minutes; The number of theoretical plates of the column is not less than 10^6, calculated with the reference to the peak of α-BHC, the resolution between two neighbouring peaks is more than 1.5.

Preparation of reference stock solution Weigh accurately a quantity of reference substance of benzene hexachloride (BHC) (α-BHC, β-BHC, γ-BHC, δ-BHC), dichlorodiphenyl trichloroethane (DDT) (PP'-DDE, PP'-DDD, OP'-DDT, PP'-DDT) and pentachloronitrobenzeen (PCNB) pesticides, dissolve with petroleum ether (60-90℃) respectively to prepare solutions containing 4-5 μg per ml.

Preparation of mixed reference stock solution Measure accurately 0.5 ml of each of the above reference stock solutions to a 10 ml volumetric flask, diluted with petroleum ether (60-90℃) to volume and mixed well.

Preparation of mixed reference solution Measure accurately the above mixed reference stock solution, diluted with petroleum ether (60-90℃) to prepare a series of solutions containing 0 μg, 1 μg, 5 μg, 10 μg, 50 μg, 100 μg and 205 μg per liter.

Preparation of test solution Crude drug Weigh accurately 2 g of the substance being examined, previously dried at 60℃ for 4 hours and pulverized to fine powder, in a 100 ml conical flask with stopper, macerate with 20 ml of water overnight. Add accurately 40 ml of acetone, weigh and ultrasonicate for 30 minutes, allow to cool, weigh, replenish the lost weight with acetone. Add 6 g of sodium chloride approximately and 30 ml of accurately measured methylene chloride, weigh and ultrasonicate for 15 minutes, weigh, replenish the lost weight with methylene chloride and stand for layer separation. Transfer quickly the organic layer to a 100 ml stopper conical flask, containing a quantity of anhydrous sodium sulfate, stand for 4 hours. Measure accurately 35 ml the above solution, concentrate in vacuum to almost dryness at 40℃. Add a small quantity of petroleum ether (60-90℃) to the residue, repeat the above procedures to exhaust the solvent of acetone and methylene chloride. Dissolve the residue with petroleum ether (60-90℃) and transfer to a 10 ml graded centrifugal tube with stopper, dilute with petroleum ether (60-90℃) to 5 ml. Add cautiously 1 ml of sulfuric acid, shake for 1 minute, and centrifuge (3000 rpm) for 10 minutes. Measure accurately 2 ml of the supernatant liquid to a graduated concentration flask (as Fig. 18), link the rotatory evaporator, concentrate in vacuum below 40℃ (or concentrate with nitrogen) to a quantity and dilute accurately to 1 ml.

Preparations Weigh accurately a quantity of substance being examined (equivalent to 2 g of crude drug), triturated to fine power (cut into pieces of pills or measure the liquid preparation directly), carry out the method described as the above preparation of test solution.

Procedure Inject accurately 1 μl of each of the test solution and the mixed reference solution with corresponding concentration, respectively, into the gas chromatograph, calculate the content of organochlorine pesticide residue of 9 kinds by external method.

2. Determination of organophosphorus pesticides residue

Chromatographic system and system suitability Use an elastic quartz capillary column (0.25 μm in internal

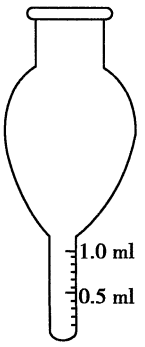

Fig. 18

diameter, 0.25 mm in external diameter, and 30 meters long) bonded with 14% cyanopropylphenyl-86% dimethylpolysiloxane mass spectrometry (DB-17MS) or HP-5, detect with nitrogen phosphorous detector (NPD); maintain injector temperature at 220℃, detector temperature at 300℃, maintain initial oven temperature at 120℃, ascend to 220℃ at 10℃ per minute, then ascend to 240℃ at 5℃ per minute and hold for 2 minutes; then ascend to 270℃ at 20℃ per minute and hold for 0.5 minutes inject split, The number of theoretical plates of the column is not less than 6000, calculated with the reference to the peak of dichlorvos, the resolution between two neighbouring peaks is more than 1.5.

Preparation of reference stock solution Weigh accurately a quantity of reference substance of parathion, methyl parathion, rogor, oxidative rogor, acephatemet, monocrotophos, alfatox, ethion, malathion, methidathion, dichlorvos and acephate pesticides respectively, dissolve with ethyl acetate to prepare solutions containing 100 μg per ml.

Preparation of mixed reference stock solution Measure accurately 1.0 ml of each of the above reference stock solutions to a 20 ml brown volumetric flask, diluted with ethyl acetate to volume and mix well.

Preparation of mixed reference solution Measure accurately the above mixed reference stock solution, dilute with ethyl acetate to produce a series of solutions containing 0.1 μg, 0.5 μg, 1 μg, 2 μg, 5 μg per ml.

Preparation of test solution

Crude drug Get approximately 5.0 g fine powder of the substance being examined (through the sieve of number 2) and weigh it accurately. Add 5 g of anhydrous sodium sulfate and 50-100 ml of ethyl acetate, ultrasonicate for 3 minutes in ice bath. Filter the super-layer solution, add 30-50 ml of ethyl acetate into the dregs, ultrasonicate for 2 minutes in ice bath, and filter. Combine these two filtrates, wash filter paper and residue with a small amount of ethyl acetate, and combine them with the above filtrate. Concentrate the filtrate in vacuum to almost dryness at 40℃, transfer into a 5 ml volumetric flask with ethyl acetate and dilute to a volume. Measure accurately 1 ml of the solution, put on a small column packed with activated charcoal [120-400 mesh, 0.25 g, 0.9 cm in internal diameter, (as Supelclean ENVI-Carb SPE Tubes, 3 ml of the small column of activated charcoal), pre-washed with 5 ml of ethyl acetate], place in the multifunctional vacuum sample processor, elute with 5 ml of the mixture of hexane and ethyl acetate (1 ∶ 1), collect the eluent, concentrate to almost dryness on the N_2-blowing instrument, and add accurately 1 ml of ethyl acetate to dissolve it.

Procedure Inject accurately 1 μl of each of the test solution and the mixed reference solution with corresponding concentration, respectively, into the gas chromatograph, and calculate the content of 12 kinds of organophosphorus

pesticide residue by external method.

3. Determination of pyrethrins pesticides residue

Chromatographic system and system suitability test Use an elastic quartz capillary column (0.25 μm in internal diameter, 0.32 mm in external diameter, and 30 meters long) bonded with 5% dipheny-95% dimethylpolysiloxane (SE-54), detect with ^{63}Ni-electron capture detector. Maintain injector temperature at 270℃ and detector temperature at 330℃, inject split, the split ratio of 20 : 1 or 5 : 1 (or selecting the optimized split value according to the instrument setting. Maintain the initial oven temperature at 160℃, and hold for 1 minute, ascend to 278℃ at 10℃ per minute, and hold for 0.5 minutes; then ascend to 290℃ at 1℃ per minute and hold for 5 minutes. The number of theoretical plates of the column is not less than 10^5, calculated with the reference to the peak of deltamethrin, the resolution between two neighbouring peaks should be more than 1.5.

Preparation of reference stock solution Weigh accurately a quantity of reference substances of cis-cypermethrin, fenvalerate and deltamethrin pesticides respectively, dissolve with petroleum ether (60-90℃) to produce solutions containing 20-25 μg per ml.

Preparation of mixed reference stock solution Measure accurately 0.5 ml of each of the above reference stock solutions to a 10 ml volumetric flask, dilute with petroleum ether (60-90℃) to volume and mix well.

Preparation of mixed reference solution Measure accurately the above mixed reference stock solutions, dilute with petroleum ether (60-90℃) to produce a series of solutions containing 0 μg, 4 μg, 8 μg, 40 μg and 200 μg of reference substance per liter.

Preparation of test solution

Crude drug Get approximately 1-2 g of substance being examined, previously dried at 60℃ for 4 hours and pulverized to fine powder (through the sieve of number 5). Weigh accurately and put in a 100 ml stopper conical flask, add 30 ml of a mixture of petroleum ether (60-90℃) and acetone (4 : 1), ultrasonicate for 15 minutes, and filter. The filtrates are combine after treating the drugs with the above procedure again. Dehydrate the filtrate with proper amounts of anhydrous sodium sulfate, then concentrate the filtrate in vacuum to almost dryness at 40-45℃, operate repeatedly with a small amount of petroleum ether (60-90℃) to exhaust the solvent of acetone, add proper amounts of petroleum ether (60-90℃) to dissolve residue, put into the small column [it is progressive from down to up 2 g of anhydrous sodium sulfate, 4 g of Florisil, 1 g of microcrystalline cellulose, 1 g of aluminium oxide and 2 g of anhydrous sodium sulfate, prewash with 20 ml of a mixture of petroleum ether (60-90℃) and ether (4 : 1)], elute with the mixture of 90 ml of petroleum ether (60-90℃) and ether (4 : 1), and collect the eluent, concentrate the filtrate in vacuum to almost dryness at 40-45℃. Add 3-4 ml of petroleum ether (60-90℃) and concentrate to almost dryness, repeatedly with a small amount of petroleum ether (60-90℃) to exhaust the solvent of the ether, dissolve with petroleum ether (60-90℃) and transfer to a 5 ml volumetric flask, dilute to volume.

Procedure Inject accurately 1 μl of each of the test solution and the mixed reference solution with corresponding concentration, respectively, into the gas chromatograph, calculate the content of three kinds of pyrethrins pesticide residue in test solution by external method.

Ⅸ R Test for Particulate Matter in Injections

The test for Particulate Matter is applied to determine the size and number of particulate matter in injections for intravenous injection that are in solutions. Prior to this test, the injection should comply with the visible particles test.

This test consists of light obscuration and microscopic test. Unless otherwise specified, light obscuration test is preferably used. If the test result using light obscuration test does not comply with the requirements or this test is not applicable for the sample, microscopic test should be followed to reach a conclusion on conformance to requirements.

Light obscuration test is not suitable for the preparations having increased viscosity, or the preparation which is apt to crystallization or the injections which will produce air bubbles when drawn into the sensor. If the viscosity of the preparation to be tested is sufficiently high so as to preclude its examination by either test method, a quantitative dilution with an appropriate diluent may be made to decrease viscosity, as necessary to allow the analysis to be performed.

Test environment Perform the test in an environment that does not contribute any significant amount of particulate matter. Test preparation should be carried in a laminar flow cabinet. The glassware and other required equipment should be clean and particle free. The water or other suitable solvent used in the test should be filtered through a filter with a porosity of not more than 1.0 μm.

Place a 50 ml volume of water or other suitable solvents for the test of particulate matter in a sample container, determined as directed under test procedure. For light obscuration test it should meet the requirements that not more than 10 particles of greater than 10 μm in size and not more than 2 particles of greater than 25 μm in size are observed in the combined 10 ml of solvent. For microscopic test it should meet the requirements that not more than 20 particles of greater than 10 μm in size and not more than 5 particles of greater than 25 μm in size are observed in the combined 50 ml of solvent. Otherwise, the water or other suitable solvents for the test of particulate matter, glassware and test environment are not suitable for particulate analysis. In this case, repeat the preparatory steps until conditions of analysis are suitable for the test.

1. Light obscuration particle count test

When particles in solution pass through a narrow testing area, the incident light at right angle with direction of fluid is weakened by obscuring of insoluble particles, therefore the output signal of sensor reduced. The variations of signal are proportional to the cross-sectional areas of particles. Light obscuration method for insoluble particles in injections are based on the principle mentioned above.

Test apparatus Usually consists of sample-feeding device, sensor and data processor.

The range of particular size determination is from 2 to 50 μm and the concentration of particles for measurement is 0-5000 particulates per ml.

Instrument calibration The instrument should be calibrated every 6 months.

(1) *Sample volume* Transfer a volume of water for the test of particulate matter that is greater than the sample

volume to a container after the instrument equilibrated, and weigh. Withdraw through the sample-feeding device a certain volume of the water, and weigh the container again. Obtain the sample volume by calculating the difference of the two weights. Test for 3 times consecutively. Each volume obtained should be within ±5% of the volume specified, and the mean value should be within ± 3% of the volume specified. The results should comply with the requirements mentioned above if it is calibrated by the other suitable methods.

(2) *Particle counting* Prepare a suspension containing 1000-1500 particles of standard particles having average diameters of 10 μm or 25 μm per ml and the relative standard deviation of the size distribution of the standard particles used is not more than 5%. Degas by ultrasonication (at 80-120 watts) for 30 seconds or by allowing to stand. Turn on the stirrer and agitate the sample gently to homogenize it. Withdraw and obtain the particle counts for three consecutive samples, disregarding the first count. The average of second and third counts should be within ±20% of the limits of number of particles.

(3) *Sensor resolution* Prepare a suspension containing 1000-1500 particles per ml of standard particles having average diameter of 10 μm (standard deviation of mean diameter is not more than 1 μm) and the relative standard deviation of the size distribution of the standard particles used is not more than 5%. Degas by ultrasonication (at 80-120 watts) for 30 seconds or by allowing to stand. Turn on the stirrer and agitate the sample gently to homogenize it (taking care not to introduce air bubbles), determine the particles at 10 μm and 12 μm channel. The ratio of the difference count of two channels and the accumulative count of 10 μm channel is not less than 68%. If the instrument calibration does not comply with the requirements, repeat the calibration steps after adjusting the instrument until it is well done.

Note Self-test can be conducted if the instrument is attached by the self-test software.

Procedure

(1) *Intravenous injection with a labelled volume of* 25 *ml or larger* Unless otherwise specified, wash the outside walls of the container of the injection being examined with water. Mix the contents by inverting the container 20 times and carefully open the container immediately. Pour a potion of specimen to wash the bottleneck and sample container, transfer the specimen in the sample container, degas by ultrasonication (at 80 to 120 watts) for 30 seconds or by allowing to stand, then place it on the sample-feeding device (or directly place the specimen on the sample-feeding device without stirring after degas). Turn on the stirrer or swirl gently by hand to homogenize the sample (avoid introducing air bubbles), withdraw a minimum of three aliquots, each not less than 5 ml in volume, record the data. Determine a minimum of another two specimens as the same way. Discard the data from the first portion of each specimen, calculate the average of consecutive counts.

(2) *Intravenous injection with a labelled volume of less than* 25 *ml* Unless otherwise specified, wash the outside walls of the container of the injection being examined with water. Mix the contents by inverting the container 20 times. Degas by ultrasonication (at 80 to 120 watts) for 30 seconds or by allowing to stand. Carefully open the container then place it on the sample-feeding device without stirring. Withdraw directly a suitable volume without introducing air bubbles, record the data. Determine a minimum of another two specimens as the same way. Discard the data from the first portion of each specimen, calculate the average of consecutive counts.

An appropriate method also can be used to combine the contents of 3 or more units to obtain a volume of not less than 20 ml into the sample container in the laminar flow cabinet. Degas by ultrasonication (at 80 to 120 watts) for 30 seconds or by allowing to stand, then place it on the sample-feeding device. Turn on the stirrer or swirl gently by hand to homogenize the sample (avoid introducing air bubbles), withdraw a minimum of three aliquots, each not less than 5 ml in volume into the light obscuration counter sensor, record the data. Discard the data from the first portion of each specimen, calculate the number of particles in each container by average the consecutive counts.

(3) *Sterile powder for intravenous injection or concentrated solution for injection* Unless otherwise specified, wash the outside walls of the container of the injection being examined with water. Carefully remove the cover, accurately add a quantity of water for particulate matter or appropriate solvent, replace the closure carefully and gently agitate the container to ensure the contents dissolved (for concentrated solution for injection, operate directly). Degas by ultrasonication (at 80 to 120 watts) for 30 seconds or by allowing to stand. Carefully open the container then place it on the sample-feeding device without stirring. Withdraw directly a suitable volume without introducing air bubbles, record the data. Determine a minimum of another two specimens as the same way. Discard the data from the first portion of each specimen, calculate the average of consecutive counts.

An appropriate method also can be used, wash the outside walls of 3 or more containers of the injection being examined with water in the laminar flow cabinet. Carefully remove the cover, accurately add a quantity of water for particulate matter or appropriate solvent respectively, gently agitate the container to ensure The contents dissolved (for concentrated solution for injection, operate directly). Combine the solution of each container to obtain a total volume of not less than 20 ml into the sample container. Degas by ultrasonication (at 80 to 120 watts) for 30 seconds or by allowing to stand, then place it on the sample-feeding device. Turn on the stirrer or swirl gently by hand to homogenize the sample (avoid introducing air bubbles), withdraw a minimum of three aliquots, each not less than 5 ml in volume, record the data. Discard the data from the first portion of each specimen, calculate the number of particles in each container by average the consecutive counts.

Evaluation

(1) *Intravenous injection with a labelled volume of* 100 *ml or larger* Unless otherwise specified, each ml of the injection contains not more than 25 particles that are greater than 10 μm and not more than 3 particles that are greater than 25 μm.

(2) *Intravenous injection with a labelled volume of less than* 100 *ml, steril powder for intravenous injection and concentrated solution for injection* Unless otherwise specified, each container of the specimen contains not more than 6000 particles that are greater than 10 μm and not more than 600 particles that are greater than 25 μm.

2. Microscopic particle count test

Test apparatus Usually consists of laminar flow cabinet, microscope, microporous membrane filter, filtration apparatus and Petri dish.

Laminar flow cabinet HEPA-filter having a pore of 0.45 μm, the direction of airflow is from inside to outside. The wind speed and the particles in the cabinet should be examined periodically.

Microscope Use a suitable binocular microscope with big visual field, equipped with an objective micrometer with a calibrated ocular micrometer (0.05-0.1 mm per grid). The coordinate axis can move up and down, left and right, move scope should larger than 30 mm. The microscope is equipped with an illuminator which the incident angle of light and the strength of light can be adjusted. It can give a magnification of 100× during examination.

Microporous membrane The membrane is 25 mm or 13 mm in diameter with pores of 0.45 μm in effective diameter, it is white in colour and grids with partition of 3 mm has been printed on one side. It should be washed with water for particular matter until free from particular matter of an effective diameter greater than 25 μm, and not more than 5 particles greater than 10 μm are left on the membrane.

Preparation Before Examination When test environment meets the requirements, rinse the filter under the cabinet with water for particulate matter or other suitable solvent. Rinse the membrane with water for particulate matter or other suitable solvent, then place it on the filter holder with a blunt forceps, invert the fixed filter and wash the inner wall of the filter repeatedly with water for particulate matter or other suitable solvent. Allow to drain and place the filter on a suction flask.

Procedure

(1) *Intravenous injection with a labelled volume of 25 ml or larger* Unless otherwise specified, wash the outside walls of the container of the injection being examined with water. Under the cabinet mix the contents by inverting the container 20 times and carefully open the container immediately. Transfer 25 ml of specimen to the pretreated filter (25 mm in diameter of membrane) gentlly along the inner wall of the filter, allow to stand for 1 minute and filter under gentle suction. Release the vacuum and wash the inner walls of the filter with 25 ml of water for particulate matter, remove the washings by suction. Release the vaccum and remove the membrane with the forceps. Place the membrane on a Petri slide, using a very thin layer of glycerin, if necessary, to hold the membrane flat and in its place. Allow the membrane to dry and place the covered slide on the micrometer stage of the microscope. Examine the membrane under 100× magnification with the incident light at a suitable angle and adjust the microscope to see the grid clearly. Count the number of particles that are greater than 10 μm, and those greater than 25 μm in effective diameter.

(2) *Intravenous injection with a labelled volume of less than 25 ml* Unless otherwise specified, wash the outside walls of the container of the injection being examined with water. Mix the contents by inverting the container 20 times carefully under the cabinet. Carefully open the container immediately. Withdraw all solutions in each container directly with an appropriate method, Transfer the specimen to the pretreated filter (13 mm in diameter of membrane) gently along the inner wall of the filter, proceed as directed for procedure (1) above.

(3) *Sterile powder for intravenous injection or concentrated solution for injection* Unless otherwise specified, prepare specimen as directed under procedure (3) in light obscuration particle count test, proceed as directed for procedure (1) above.

Evaluation

(1) *Intravenous injection with a labelled volume of 100 ml or larger* Unless otherwise specified, each ml of the injection contains not more than 12 particles that are greater than 10 μm and not more than 2 particles that are greater than 25 μm.

(2) *Intravenous injection with a labelled volume of less than 100 ml, Sterile powder for intravenous injection and concentrated solution for injection* Unless otherwise specified, each container of the specimen contains not more than 3000 particles that are greater than 10 μm and not more than 300 particles that are greater than 25 μm.

Ⅸ S Determination of Materials in Injection

Materials about injection refers to that material which still remain in the injection and whose content probably need controlling after the Chinese medicinal material having been extracted, purified and made into injection.

Unless the prescription of General Requirement of Injection, the content of protein, tannin and resin should be controlled. The content of oxalate and potassium iron should be controlled in venous injection. The determination proceeds as follow:

Protein Unless specified otherwise, measure the injection 1 ml, add fresh 30% sulfonic salicylic acid TS 1 ml, mix well and allow to stand for 5 minutes. Opalescence should not be observed. If the injection contains the composition produced precipitation when meeting with acid, add tannic acid TS 1-3 drops instead. Opalescence should not be observed.

Tannin Unless specified otherwise, measure the injection 1 ml, add fresh sodium chloride physiological solution containing 1% egg white 5 ml and allow to stand for 10 minutes. Opalescence should not be observed. Or measure the injection 1 ml, add dilute acetic acid 1 drop, then add sodium chloride and gelatin TS 4-5 drops. Opalescence should not be observed.

The injection which contains substance such as macrogol and polysorbate will not precipitate though it contains tannin. To this injection, the semi-finished product should be determined before adding additive.

Resin Unless specified otherwise, measure the injection 5 ml, add hydrochloric acid 1 drop and allow to stand for 30 minutes. No flocculus should appear. If the injection contains those composition that will precipitate when meeting with acid, add chloroform 10 ml instead. Shake well, separate the chloroform solution, evaporate on a water bath to dry, add glacial acetic acid 2 ml in the residue to dissolve it, then pour into a test tube with plug, add water 3 ml and mix well, allow to stand for 30 minutes. No flocculus should appear.

Oxalate For the solution of injection for venous injection, unless specified otherwise, measure the injection 2 ml, adjust the pH 1-2 with dilute hydrochloric acid, then filter, adjust the pH value of the filtrate to 5-6, add 3% calcium chloride solution 2-3 drops and allow to stand for 10 minutes. No opalescence or precipitate should be observed.

Potassium iron Unless specified otherwise, measure the injection for venous injection 2 ml, evaporate to dry. First, ignite till carbonized with weak flame, then incinerate at the temperature of 500-600℃ until carbon-free. Add dilute acetic acid to dissolve, and transfer into 25 ml volumetric flask, dilute with water to the volume and mix well, use as a test solution.

Take two absorptiometer, measure accurately potassium iron standard solution 0.8 ml in tube A, add alkaline formaldehyde (measure formaldehyde solution, adjust the pH value to 8.0-9.0 with sodium hydroxide) 12 drops, 3%

disodium edetate solution 2 drops, 3% sodium tetraphenylborate solution 0.5 ml, dilute with water to 10 ml. Measure accurately the test solution 1 ml in tube B, process as what done on tube A at the same time, shake well. Compare to opalescence produced by viewing down the vertical axis of the cylinders against a black background. Opalescence of tube B should not be heavier than that of tube A.

Note Preparation of potassium iron standard solution.

Place suitable potassium sulfate, grind into fine powder, dry to constant weight at 110℃, weigh 2.330 g accurately, put into 1000 ml volumetric flask, add sufficient water to dissolve and dilute to the volume, shake well, use as store solution. Immediately before using, measure accurately the store solution 10 ml in 100 ml volumetric flask, dilute with water to volume and shake well (per ml equals to 100 μg potassium).

Ⅸ T Determination of Methanol

The gas chromatographic method (Appendix Ⅵ E) is used for the determination of the content expressed in percentage of methanol in tincture of Chinese medicine, unless specified otherwise.

Chromatographic system and system suitability Carry out the method for gas chromatography, using porous polymer beads of ethylvinylbenzene cross-linked with divinylbenzene 0.18-0.25 mm in diameter as the support, maintain the column temperature at 125℃. The number of theoretical plates of the column is not less than 1500, calculated with the peak of methanol; The resolution of the peaks of methanol and internal standard should be more than 2.

Determination of Correction Factor Measure accurately 1 ml *n*-propanol into 100 ml volumetric flask, dilute with water to the volume and mix well. It is used as an internal standard solution. Measure accurately 1 ml methanol in 100 ml volumetric flask, measure precisely, dilute with water to the volume. Measure accurately 10 ml each of the test preparation and the internal standard. Carry out successively 3-5 injection of 1 μl of the standard. Calculate the correction factor by the average area of peaks.

Procedure Measure accurately the internal standard 1 ml in 10 ml volumetric flask, add the solution being examined to the volume and mix well, used as a test solution. Inject accurately 1 μl of the test solution into the column, determine and calculate the content.

Unless specified otherwise, the content of methanol should not be more than 0.4 g each 1 L of the solution being examined.

Annotations (1) Be sure that no peak due to impurity corresponding to the internal standard appears in the chromatogram obtained from the test preparation in the absence of internal standard.

(2) System suitability must comply with the requirements descried above, when any supports are used.

(3) The chromatographic system and system suitability must comply this method, when use other supports.

Appendix X

X A Determination of Extractives

1. Determination of Water-soluble Extractives Pulverize the material being examined, pass through No. 2 sieve, mix well.

Cold maceration method Place 4 g of the powdered material, accurately weighed, in a 250-300 ml stoppered conical flask, add accurately 100 ml of water, and stopper well. Macerate the drug with shaking for 6 hours and allow to stand for 18 hours. Filter rapidly through a dry filter, transfer accurately 20 ml of filtrate to an evaporating dish, previously dried to constant weight, and evaporate to dryness on a water bath. Dry at 105℃ for 3 hours and allow to cool for 30 minutes in a desiccator. Weigh rapidly and accurately, unless specified otherwise in the monograph, calculate the percentage of water-soluble extractives on the dried basis (%).

Hot extraction method Place 2-4 g of the powdered material, accurately weighed in a 100-250 ml stoppered conical flask, add accurately 50-100 ml of water, stopper well and weigh, allow to stand for 1 hour. Boil gently under reflux for 1 hour. Allow to cool, take off the flask, stopper well and weigh, add water to restore its original weight, shake well and filter through a dry filter. Place 25 ml of the filtrate, accurately measured, in an evaporating dish, previously dried to constant weight, and evaporate to dryness on a water bath. Dry at 105℃ for 3 hours and allow to cool for 30 minutes in a desiccator. Weigh rapidly and accurately, unless specified otherwise in the monograph, calculate the percentage of water soluble extractives on the dried basis (%).

2. Determination of Ethanol-soluble Extractives Proceed as directed under determination of water-soluble extractives using ethanol of a concentration specified in individual monograph as the solvent instead of water.

3. Determination of volatile ether extractives Place 2-5 g of the powdered material (through No. 4 sieve), accurately weighed, dry for 12 hours in a desiccator with P_2O_5. Place in a Soxhlet's extractor, add a quantity of ether, boil under reflux for 8 hours, unless specified otherwise in the monograph. Place in a evaporating dish, previously dried to constant weight, and evaporate to dryness. Dry for 18 hours in a desiccator with P_2O_5, weigh accurately, heat to 105℃ slowly, dry at 105℃ to constant weight. The weight loss is the weight of volatile ether extractives.

X B Determination of Tanninoids

This experiment should be processed without illumination.

Preparation of reference solution Place 50 ml reference substance solution of gallic acid, accurately measured, in 100 ml brown measuring flask, dissolve and dilute to volume with water. Place 5 ml, accurately measured, in 50 ml brown measuring flask, dilute to volume with water, shake well (0.05 g gallic acid per ml).

Preparation of standard curve Place 1.0 ml, 2.0 ml, 3.0 ml, 4.0 ml, 5.0 ml reference substance solution, in 25 ml brown measuring flask, add 1 ml phosphotungstomolybdic acid respectively, then add 11 ml, 10 ml, 9 ml, 8 ml, 7 ml water respectively, dilute to volume with 29% sodium carbonate, shake well. With corresponding reagents as blank, measure the absorbance at 760 nm according to the Ultraviolet Spectrophotometry and Colourimetry (appendix V A). Draw the standard curve with the absorbance as ordinate and concentration as abscissa.

Preparation of test solution Place a quantity of the powdered material (according to the prescription under the individual monograph), accurately weighed, in a 250 ml brown measuring flask, add 150 ml water, stand overnight, treat with ultrasound for 10 minutes, allow to cool, dilute to volume with water, shake well, keep standing (for solids depositing), filter and throw away the first 50 ml of filtrate. Place 20 ml of the filtrate, accurately measured, in 100 ml brown measuring flask, dilute to volume with water.

Procedure

Total phenol Place 2 ml solution being examined, accurately measured, into 25 ml brown measuring flask. Follow the steps in preparation of standard curve, from "add 1 ml phosphotungstomolybdic acid", add 10 ml water, measure the absorbance according to the method and calculate the content of gallic acid in the test solution using the standard curve.

Non-adsorbed polyphenol Place 25 ml solution being examined, accurately measured, in 100 ml stoppered conical flask, previously added 0.6 g casein, and stopper well. Stay at 30℃ for 1 hour on a water bath, shake well, then allow to cool, filter and throw away the frontal filtrate. place 2 ml of the filtrate, accurately measured, in 25 ml brown measuring flask. Follow the steps in Preparation of standard curve, from "add 1 ml phosphotungstomolybdic acid", add 10 ml water, measure the absorbance and calculate the content of gallic acid in the solution being examined using the standard curve.

Use this following formula to calculate the content of tannin in the test solution.

Tatol tannin=(Total phenol)−(Non-adsorbed polyphenol)

X C Determination of Cineol

Carry out the method for gas chromatography (Appendix VI E).

Chromatographic system and system suitability Pack a column with 7 : 3 (g/g) of 10.0% polyethylene glycol (PEG)-20M and 2.0% silicon (OV-17), with PEG at the end of injection; maintain the column temperature at 110℃±5℃; the number of theoretical plates of the column is not less than 2500, calculated with reference to cineol; the resolution factor of the peaks of cineol and its neighboring impurities should meet the requirement.

Determination of the correction factor Dissolve a quantity of cyclohexanone, accurately weighed, in *n*-hexane to make a solution containing 50 mg per ml as the internal standard. Weigh accurately about 100 mg of cineol CRS to a 10 ml volumetric flask, add accurately 2 ml of the internal standard solution, dilute with *n*-hexane to volume, shake well, inject 1 μl of the solution to the column for 3-5 times, and calculate the correction factor by the average area of peaks.

Preparation and determination of the test solution Weigh accurately about 100 mg of the sample to a 10 ml volumetric flask, add accurately 2 ml of internal standard solution, dissolve and dilute with *n*-hexane to volume, shake well, use it as the test solution. Inject 1 μl of the solution to the column and calculate the content of cineol.

Ⅹ D Determination of Volatile Oil

The drug being examined should be pulverized to pass through No. 2 or No. 3 sieves and then mixed well, unless specified otherwise.

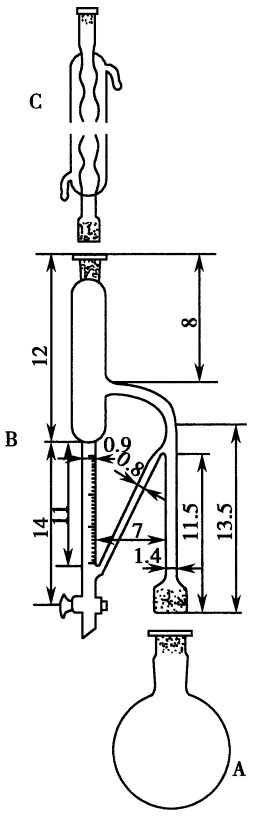

Fig. 19

Apparatus The apparatus consists of three parts as shown in the figure (as Fig. 19).

A is an 1000 ml (or 500 ml, 2000 ml) round-bottom flask made of hard glass, B is a volatile oil determination tube and C is a reflux condenser. All parts are connected via ground glass joints. The measuring tube in B is graduated into divisions of 0.1 ml. The glass apparatus is cleaned thoroughly and the ground glass joints are tightly connected to avoid the escape of volatile oil.

Note The volatile oil determination tube B must be set vertically, while the connecting point between the side tube and the graduated measuring tube is at a horizontal level.

Procedure

***Method* 1** This method is used for determining volatile oils of which the relative density is less than 1.0. Weigh accurately to the nearest 0.01 g, a quantity of the substance being examined equivalent to 0.5-1.0 ml of volatile oil, into flask A. Add 300-500 ml of water and a few glass beads, shake and mix well. Connect flask A to volatile oil determination tube B and then connect B to reflux condenser C. Add water through the top of reflux condenser C until the graduated tube of B is filled and overflows to flask A. Heat the flask gently in an electric heating jacket or by other suitable means until boiling begins and continue heating for about 5 hours, until the volume of oil does not increase. Stop heating, allow to stand for a few minutes, and open the stopcock at the lower part of B, run off the water layer slowly until the oily layer is 5 mm above the zero mark. Allow to stand for at least 1 hour, open the stopcock again, run off the remaining water layer carefully until the oily layer is just on the zero mark. Read the volume of oil in the graduated portion of the tube and calculate the content of volatile oil, expressed as percentage (ml/g).

***Method* 2** This method is used for determining volatile oils of which the relative density is more than 1.0. Transfer 300 ml of water and a few glass beads to flask A. Connect flask A to volatile oil determination assembly B. Add water through the top of B until the graduated tube of B is filled and water overflows to flask A. Add 1 ml of xylene with a pipette and then connect the reflux condenser C to B. Heat the flask until boiling begins and continue the distillation at a rate that will keep the middle part of the condenser cold. Stop heating after 30 minutes, and allow to stand for at least 15 minutes. Read the volume of xylene in the graduated portion of the tube. Carry out the procedure described under Method 1, beginning at the words "Weigh accurately to the nearest 0.01 g". Substract the volume of xylene previously observed from the volume of the oily layer, the remainder is taken to be the content of volatile oil in the drug being examined, expressed as percentage (ml/g).

Appendix XI

XI A Colour of Solution

The colour of solution and its difference from the specified colour can, to some extent, demonstrate the purity of drug. Colour of Solution is a method for testing the colour of a solution, by comparing the colour of solution of drug with that of the reference solutions specified, or, measuring the absorbance at the specified wavelength.

A solution which is termed "colourless" specified in an individual monograph means that the colour of solution of drug is the same as that of the solvent being used for the preparation of the solution, and a solution which is termed "almost colourless" means that the colour of solution of drug is less intense than that of a reference solution, prepared by diluting reference solution No. 1 with same volume of water.

Method 1

Unless otherwise specified, dissolve a quantity of the substance being examined specified in an individual monograph with water in a 25 ml Nessler cylinder, dilute with water to 10 ml. Place in another Nessler cylinder 10 ml of reference solution of specified tint and colour. View down vertically the cylinders against a white background, or view horizontally against a white background in diffused light. The colour in the cylinder containing the test solution is not more intense than that in the cylinder containing the reference solution. If the colour in the cylinder containing the test solution is, or is almost, the same as that in the cylinder containing the reference solution, or the tint between cylinders is not consistent, so that it is unable to estimate the result by naked eye, Method 3 (Colour Difference Meter Method) should be used, and the result should be accorded for justifying.

Potassium dichromate standard solution as reagents Dissolve 0.4000 g of reference potassium dichromate, previously dried to constant weight at 120℃ and accurately weighed, in water in a 500 ml volumetric flask and dilute with water to volume, shake thoroughly. Each ml of the solution contains 0.800 mg of $K_2Cr_2O_7$.

Cupric sulfate standard solution as reagents Dissolve about 32.5 g of cupric sulfate in a quantity of hydrochloric acid solution (1→40) to produce 500 ml. Transfer 10 ml of the solution, accurately measured, to an iodine flask, add 50 ml of water, 4 ml of acetic acid and 2 g of potassium iodide. Titrate with sodium thiosulfate (0.1 mol/L) VS, add 2 ml of starch IS towards the end point of the titration and continue to titrate until the blue colour disappears. Each ml of sodium thiosulfate (0.1 mol/L) VS is equivalent to 24.97 mg of $CuSO_4 \cdot 5H_2O$. Dilute the rest of cupric sulfate solution with hydrochloric acid solution (1→40) to contain 62.4 mg of $CuSO_4 \cdot 5H_2O$ per ml, based on the above assay result.

Cobaltous chloride standard solution as reagents Dissolve about 32.5 g of cobaltous chloride in a quantity of hydrochloric acid solution (1→40) to produce 500 ml. Transfer 2 ml of the solution, accurately measured, to a flask, add 200 ml of water, mix well. Add ammonia TS until the solution turns from pink to green colour, add 10 ml of acetic acid-sodium acetate BS (pH 6.0), heat to 60℃ and then add 5 drops of xylenol orange IS. Titrate with disodium edetate (0.05 mol/L) VS until the solution turns to yellow. Each ml of disodium edetate (0.05 mol/L) VS is equivalent to 11.90 mg of $CoCl_2 \cdot 6H_2O$. Dilute the rest of cobaltous chloride solution with hydrochloric acid solution (1→40) to contain 59.5 mg of $CoCl_2 \cdot 6H_2O$, based on the above assay result.

Preparation of stock reference solutions Prepare the following stock Reference Solutions, using the 3 Standard Solutions.

Preparation of stock reference solutions (expressed in ml)

Colour	Cobaltous chloride standard solution	Potassium dichromate standard solution	Cupric sulfate standard solution	Water
yellowish green(YG)	1.2	22.8	7.2	68.8
yellow(Y)	4.0	23.3	0	72.7
orange yellow(OY)	10.6	19.0	4.0	66.4
orange red(OR)	12.0	20.0	0	68.0
brownish red(BR)	22.5	12.5	20.0	45.0

Preparation of reference solutions Prepare the following reference solutions, using the Stock Reference Solutions.

Preparation of reference solutions (expressed in ml)

Number of reference solution	1	2	3	4	5	6	7	8	9	10
Stock Reference Solution	0.5	1.0	1.5	2.0	2.5	3.0	4.5	6.0	7.5	10.0
Water	9.5	9.0	8.5	8.0	7.5	7.0	5.5	4.0	2.5	0

Method 2

Unless otherwise specified, dissolve a quantity of the substance being examined specified in an individual monograph with water to produce a solution of 10 ml, filter if necessary. Measure the absorbance at the wavelength specified, it gives not more than the required value.

Method 3 (Colour Difference Meter Method)

This is a method describing and analyzing the colour of a solution quantitatively by direct measurement of its tristimulus values of transmittance using colour difference meter. Using this method for determination recognition when it is difficult to identify the colour difference between a test specimen and a reference solution visually.

Colour difference between a test specimen and a reference solution is achieved by comparing their tristimulus values directly or by comparing them with those of water respectively.

According to the modern colour vision theory, there are three kinds of colour-sensitive pyramidal cells in retina of human eyes, which are sensitive to red, green and blue respectively. The colour vision procedure can be divided into two steps. Firstly, the three kinds of independent colour-sensitive pyramidal substances in retina absorb light radiation of various wavelengths of spectrum selectively and at the same time each by itself produces the reaction of white in the strong light or of black without stimulation outside. Then these three reactions combine again in the course of nerve stimulation transmission from the pyramidal receptors to the vision centre, resulting in three pairs of opposite neural reactions, i. e., red or green, yellow or blue, and white or black reaction. At last various senses of colours are formed in the vision centre of the pallium.

All colours in nature can be composed of a mixture of proper ratio of red, green and blue, the three primary colours, which are suitably chosen to excite the three kinds of receptor cells in human eyes. So a new concept, the tristimulus values, (X, Y, and Z), can be defined as three primary source stimulation values to match the colour being examined in the given three-colour system. Through extensive colour-matching experiments with human subjects having normal colour vision (who are called standard observers or standard eyes), distribution coefficients ($\bar{x}$ (λ), $\bar{y}$ (λ) and $\bar{z}$ (λ)) have been measured for each visible wavelength (380-780 nm) which stimulates each pyramidal receptor to give the relative data. The curve of the combined distribution coefficients is called the spectral tristimulus values curve of the CIE 1931 standard colourimetric observer (as Fig. 20).

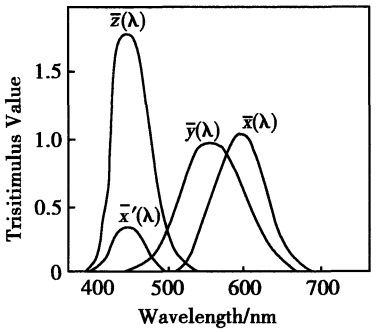

Fig. 20 The spectral tristimulus values curve of CIE 1931 standard colourimetric observer (the visual field being 10°)

The relationships between the distribution coefficient and the tristimulus values are given in following equations

$$X=K\int S\ (\lambda)\ P\ (\lambda)\ \bar{x}\ (\lambda)\ \mathrm{d}\ (\lambda)$$

$$Y=K\int S\ (\lambda)\ P\ (\lambda)\ \bar{y}\ (\lambda)\ \mathrm{d}\ (\lambda)$$

$$Z=K\int S\ (\lambda)\ P\ (\lambda)\ \bar{z}\ (\lambda)\ \mathrm{d}\ (\lambda)$$

Where K is the normalization coefficient;
S (λ) is the relative spectral power distribution of the illuminant;
P (λ) is either the spectral reflectance or spectral transmittance produced by the colour object;
$\bar{x}$ (λ), $\bar{y}$ (λ) and $\bar{z}$ (λ) are the distribution coefficients of standard observers;
d (λ) is the wavelength interval, usually of 10 nm or 5 nm.

Once the tristimulus values of a colour have been determined, they may be used to calculate the coordinates of the colour in an idealized three-dimensional colour space. Many sets of colour equations named as the colour express system have been developed to define the space, such as the CIE 1931-*XYZ* colour express system, the CIE 1964 supplemental standard chroma system, the CIE 1976$L^*a^*b^*$ colour space or the CIE *Lab* uniform colour space, the Hunter colour express system, etc.

In order to understand and compare conveniently, the CIE *Lab* uniform colour space is often used to describe colour and colour difference. It is constructed by a right-angle coordinate labelled by L^* a^* b^* respectively. Every point in the three-dimensional-colour coordinate represents a colour and the geometrical distance between the point and the reference point illustrates the difference between the two colours (as Fig. 21 and Fig. 22). The same distance means the same colour difference. When the instrumental method is applied to compare the colour of a test preparation with that of a standard, the parameter needed to be compared is the difference, in the visually uniform colour space, between the colour of the blank and that of the test specimen or standard.

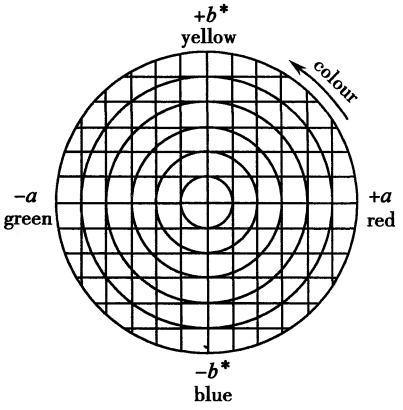

Fig. 21 The L^* a* b* chromaticity diagram

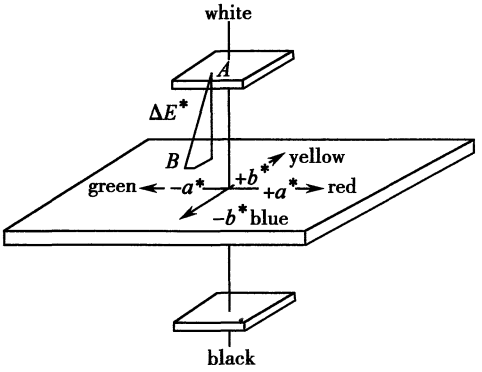

Fig. 22 The L^* a* b* colour space and the colour difference ΔE^*

In the CIE *Lab* uniform colour space, the relationships of among colour coordinates L^*, a^* and b^*, the tristimulus values X, Y and Z and the colour difference ΔE^* are defined by

Luminosity Index $L^* = 116 \times (Y/Y_n)^{1/3} - 16$

Chromaticity Index $a^* = 500 \times [(X/X_n)^{1/3} - (Y/Y_n)^{1/3}]$

Chromaticity Index $b^* = 200 \times [(Y/Y_n)^{1/3} - (Z/Z_n)^{1/3}]$

Colour Difference $\Delta E^* = \sqrt{(\Delta L^*)^2 + (\Delta a^*)^2 + (\Delta b^*)^2}$

Where X, Y and Z are the tristimulus values of the test specimen, X_n, Y_n and Z_n are the tristimulus values of the absolutely diffuse reflection material, and X/X_n, Y/Y_n and Z/Z_n should be more than 0.008856. ΔE^*, ΔL^*, both Δa^* and Δb^* are the colour difference, the luminosity index difference, and the chromaticity index differences of the test specimen and the standard respectively. The colour of the test specimen is brighter than that of the standard when ΔL^* is positive, and deeper or more saturated when Δa^* and Δb^* are both positive.

Briefly, the operating principle of colour difference meter is to simulate the sense of sight system of human eyes and turn the tristimulus values of spectral data into the mathematical expression of the colour through its inner analogy integrating optical system, then calculate L^*, a^*, b^* and ΔE^*. Fig. 23 is the working schematic diagram of a colour difference meter. Instrumental methods can provide accurate and precise measurements of colour and colour differences with the same spectral power distribution of the standard light source as that of the light source used in common colour observation (e.g., in daylight) and with the same photo-electrical response receptor as the colour vision of the observers (e.g., the visual field is 10°.) The provided data are more objective that do not drift with time, place and individuals.

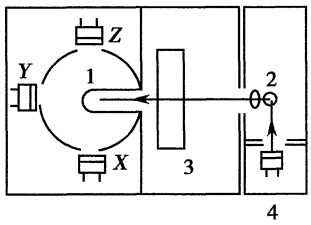

Fig. 23 The photometry system diagram of the colour difference meter

1-integrating sphere; 2-light source; 3-transmissive sample; 4-photo-electric tube for balance

1. General requirements of the instrument The instrument is commonly a photo-electric integrating colour difference meter. The illumination and observation condition is o/d or d/o, the light source is D65, and the visual field is 10°. It can detect the tristimulus values X, Y and Z and calculate L^*, a^*, b^*, ΔE^*, the hue and the hue number of the test solution directly.

For the measurement of the spectral transmittance of clear liquids, the colour of solutions changes with the thickness of the layer measured. Unless otherwise specified, a cell of 1 cm should be used.

To ensure the reliability of the measurement, the instrument should be calibrated at regular intervals. Colourless materials such as water or air should be used as a standard and assigned a transmittance of 1.000 at all wavelengths during the calibration.

The tristimulus values of water or air are $X = 94.81$, $Y = 100.00$, and $Z = 107.32$ under the conditions of the light source being D65 and the visual field being 10° at room temperature.

2. Determination Unless otherwise specified, the colour difference meter should be calibrated with water firstly. Then detect the solutions of the test specimen and the standard which are prepared as directed in the individual monograph. The colour difference ΔE^* between the solutions of the test specimen and water should not be more than that between the solutions of the standard and water.

If there are two tints specified in the individual monograph, and the actual tint of the solution of the test specimen is between the two standard tints specified, and difficult to judge, the colour difference ΔE^* between the solutions of the test specimen and water should not be more than the mean value of the colour differences between the solution of the two standard tints and water $[\Delta E^* \leqslant (\Delta E^*_{s1} + \Delta E^*_{s2})/2]$.

Ⅺ B Determination of Particle Size

The following procedures determine the particle size or size limit of powders in pharmaceutical preparations.

Method 1 (microscopy)

The particle size determined by this method is expressed as the length of particles observed under a microscope.

Standardization of ocular micrometer standardize following the microscopic identification method (appendix Ⅱ C).

Procedure Unless specified otherwise, thoroughly mix the substances being examined [For the substances with high viscosity, a suitable quantity of glycerin solution (1→2) specified in the individual monograph may be added.] Introduce the substances being examined onto a slide as specified in the appendix of the dosage from or in the individual monograph, cover a cover glass (prevent formation of bubbles), and press gently to make the particles spread uniformly. For the substances being examined which is semisolid, it can be spread directly onto a slide. Immediately examine the slide under a microscope, in the whole field of view, using 50-100× magnification. No agglomeration occurs and none of the particles has a dimension of 50 μm or greater than it specified in the individual monograph. Examine the slide again under a microscope, in the field of view specified in the appendix of the dosage form or in the individual monograph, using 200-500× magnification. Record the total number of particles observed and the number of particles having the specified dimension. Calculated the percentage.

Method 2 (sieving)

1. Single sieve Unless specified otherwise, place 10 g of the substances being examined upon the specified No. sieve with a close-fitting receiving pan and cover. Shake the sieve in a rotary horizontal direction for not less than 3 minutes, and gently tap on the sieve frequently in vertical direction. Weight accurately the amount in the receiving pan, and calculate the percentage.

2. Two sieves Unless specified otherwise, place 30 g of the substances being examined upon the specified No. sieve. Shake the sieve in a left-to-right horizontal direction by gently tapping on the sieve for 3 minutes. Weigh accurately the amount remaining on the smaller No. sieve and passing through the larger No. sieve. Calculate the percentage of each fraction.

Ⅺ C Test for Visible Particles

Visible particles are defined as insoluble substance that

present in injections or eye drops and can be observed under the required conditions by visual test. Their size or length are usually more than 50 μm.

Injections or eye drops should be produced according to the Good Manufacture Practice (GMP). All of the products should be detected respectively by suitable methods before released, and the unacceptable products are eliminated synchronously.

There are two methods for the test for visible particles-lamp test and light scattering method. Lamp test is commonly used, but light scattering method also may be used especially some products that unsuitable for lamp test, such as the containers are coloured transparent glass or the colour of the solutions being examined is too dark to observe, should be detected by light scattering method.

During the test is carring out in laboratory, must prevent to introduce foreign visible particles. All procedures must be performed under hygienic class 100, preferably in a laminar-air-flow cabinet, if the containers of samples being examined are unsuitable for detected (opaque or unshaped), and need to transfer the contents into other appropriative glass containers.

1. Lamp test

This test is carried out in a darkroom.

Apparatus See the following figure (as Fig. 24):

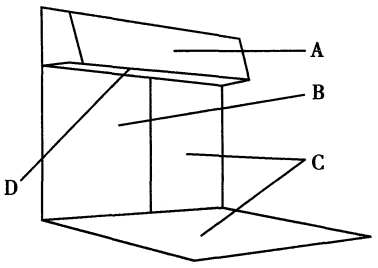

Fig. 24

A-a light source of daylight lamp with panel for obstructing from light; The intensity of illumination is adjustable between 1000-4000 lx;
B-a non-glare black background;
C-a non-glare white background and the bottom (supply with test for coloured particles);
D-a glare white background (inboard of light baffle).

Requests for inspector Inspector's visions of distant and near distance should be 4.9 or more than 4.9 (vision after correcting defects should be 5.0 or more than 5.0); Inspector is also not colour blindness.

Procedure Unless otherwise specified, take 20 containers being examined randomly. First remove any adherent labels from the containers, clean the outer surfaces, then gently swirl and invert each individual container in order to force the visible particles that present in solutions being examined floating (Caution: ensuring that air bubbles are not introduced). If necessary, transfer the solutions being examined into other clean and transparent appropriative glass containers. Hold the bottle-neck of the container at the edge of light baffle and gently invert the container, meanwhile observe the presence of any particles in it, and retain appropriate distance to inspectors' eyes (common distance is 25 cm) with visual method respectively under black background and white background.

The intensity of illumination should be 1000-1500 lx for the colourless injections or eye drops; The intensity of illumination should be 2000-3000 lx for the samples which with coloured glass or transparent plastic containers and coloured solutions being examined; For the suspensions for injections or eye drops only detect coloured mass, cilia etc. the intensity of illumination should be 4000 lx.

Criteria

Solutions for injection i. v., concentrated solutions for injection and eye drops All of the 20 containers should be free from visible particles. If visible particle has been found in not more than 1 container, repeat the procedure for a further 20 containers, and none visible particles could be found.

Suspensions for injection or eye drops All of the 20 containers should be free from coloured mass, cilia etc.

Injections not used for i. v., power for injections and sterile raw material for injection Comply with the related requirements of the drug surveillance administration of State Council.

2. Light scattering method

When a beam of monochromatic colour laser pass through the solution being examined, the insoluble substances in the solution cause the light scattering. The scattering energy is related to the size of insoluble substance. This method is intended to measure the light scattering energies caused by insoluble substance in solutions and then compare the energies with liminal value which preseted to check out the visible particles.

The light scattering energies caused by insoluble substance can be analyzed base on the series of the images collected. Suppose the light scattering energies is E, it is processed opto-electrical signal change over, became a corresponding stereopicture with the height of pyramid is H and the diameter is D and a pick-up camera can catches it. The light scattering energies E is a monotonous function for D and H, i. e. $E=f(D, H)$. Meanwhile, suppose the intensity of the light scattering energies is q, the exposure time of take a photograph is T, there is furthermore $E = g(q,T)$. Reasoning can be obtained from the above that the relationship between D with q and D with T is $D = w(q,T)$, remain the relationship of monotonous function. After D has been determined, the light scattering energies can be calculated according to the curve of the function.

Apparatus and Principle The apparatus consists of the rotator for sample bottle, laser photosource, image collecting equipment, data processing system and terminal monitoring system. It also includes the automatic send and deliver devices for the bottle.

The samples are transferred to the rotator by the send device. The rotator must rotate the bottle rounding the perpendicular line in high speed for a while and then stopped sharply. The homogeneous laser beam from laser photosource should evenly illuminates through the solutions being examined. As soon as the turbulent flow in the solutions disappears, but the solution is still rotating due to inertia, the image collecting equipment takes images continuously at specific angle for light scattering energies that resulting from insoluble substances in the rotating solution. The numbers of image should be not less than 75. Data processing system then processes the series of the images. It will assess automatically the insoluble substance more than given size exists or not according to the predefined criteria, or it will display the images on the monitor in order to making decision manually. The results will be recorded at the same time. Then the deliver device will be instructed to differentiate the qualified and unqualified samples automatically.

Standardization for Instrument The instrument should have the automatic calibrating function. The calibration should be carried out using the reference particles before the test.

Unless otherwise specified, calibrate the instrument using

the reference particles with diameter 40 μm and 60 μm respectively. The curve equation resulting from the calibration then is used to calculate the corresponding pinel parameter of the reference particle with diameter 50 μm for test criterion.

After the pinel parameter is set according to the 50 μm reference particle, detect the solutions containing the 60 μm reference particle three times, each result should be positive.

Procedure Unless otherwise specified, choice the corresponding test parameters from the menu provided in the instrument according to the strength of samples and adjust the parameters in compliance with the size of the containers. The test must carry out three times. If a container fails the test even one time, change the method to the lamp test for further confirmation except the container is coloured transparent vessel or the colour of the solution being examined is too dark to observe by visual test.

In general conditions, the left and right lines of sampling window should overlap with the edges of the container, the upper line should be a secant line with the curve surface of the solution in the container. Rotating time parameter should be setted longer than the time that the whirlpool in the solution reaches to the bottom of the bottle in order to force the solid substances floating and air bubble broken. Holding time parameter should be set as short as possible but not shorter than the time for the whirlpool calming down in order to avoid the interference of air bubbles meanwhile retain the solid substances in moving state when image collecting equipment start to work. The tightness parameter for holding bottle prefer to same with the diameter of the bottom of the bottle (mm), and it is adjustable based on the qualities of the bottle. If the bottle is not smooth and straight enough to avoid the vibration during rotating, air bubbles would be introduced. In this case the tightness parameter should be increased to decrease the vibration, meanwhile, the rotating time parameter should be increased so ensuring that the whirlpool in the solution reach to the bottom of the bottle.

Injections Unless otherwise specified, take 20 containers being examined randomly. First remove any adherent nontransparent labels from the containers, clean the outer surfaces, then put the samples onto the send device, start the instrument and record the results. All of the 20 containers should be free from visible particles. If it is confirmed that visible particle has been found in not more than 1 container, repeat the procedure for a further 20 containers, and none visible particles could be found.

Eye drops Unless otherwise specified, take 20 containers being examined randomly and transfer the solutions into other clean and diaphanous appropriative glass containers. Put the containers onto the send device, start the instrument and record the results. All of the 20 containers should be free from visible particles. If it is confirmed that visible particle has been found in not more than 1 container, repeat the procedure for a further 20 containers, and none visible particles could be found.

XI D Inductively-Coupled Plasma Mass Spectrometry

Inductively-coupled plasma mass spectrometry aims at ionizing test substances using inductively-coupled plasma, separating them according to mass-to-charge ratio of ions, determining the intensitd of all kinds of ion peaks. Plasma composed of free electrons, ions and neutral atoms or molecules, is a gas characterizing electric neutrality in the whole, and its inner temperature is high to several thousand centigrade to million centigrade. The sample is atomized by atomization device, and brought by carrier gas to traverse the center of plasma flame torch, quickly evaporated and ionized and admitted into mass analyzer via sampling cone or ion introduction interface. Samples completely evaporate and dissociate at ultra high temperature, the percentage of ionization is high, so it is very sensitive for nearly all elements; because molecular constitution of compounds have been destructed, it is merely applicable to elemental analysis.

Ⅰ. General requirement for instruments

Inductively-coupled plasma mass spectrometer is generally composed of sampling system, Inductively-coupled plasma (ICP) ion source, mass analyzer and detector, realizes the coupling of ICP and mass spectrometer, mainly used for elemental analysis and valence analysis.

Carrier gas Carrier gas generally used by instruments is argon, whose purity should be better than 99.99%, possibly supplied by high-pressure cylinder and liquid storage tank, and enters ion torch pipe at certain of flow rate through proper decompression device.

Sampling system Sampling mode is direct sampling of solution. Inject solution into instrument through sampling pipe using peristaltic pump. Sampling pipe generally includes sample pipe and internal standard pipe. During the test, the temperature of atomizing chamber should be stable (according to instrument requirement). After using, atomizing chamber should be rinsed, and it is forbidden to touch directly the spout by hand.

Ion source and sampling cone Torch pipe and sampling cone should be rinsed after a period of time in use. During test gas pipe should be kept closed without leaking, and the reflection power of instrument should be monitored. Because of rather high temperature during flare burning of plasma, circulating water system should be utilized to cool, and use air exhaust system of proper power to exhaust the heat inside the instrument. Temperature of circulating water and air exit should be controled under the instrument requirement.

Mass analyzer and detector Mass analyzer is generally quadrupole analyzer with the function of mass inside the scanning. Detector is generally photoelectricity multiplier or electron multiplier. Mass analyzer should be kept in vacuum and vacuum degree should meet the instrument requirement. The instrument may be kept standby in vacuum state, but vacuum degree should be recovered to atmospheric pressure according to requirement before cutting electric source. When the concentration of test element of test substance is rather high, dilution is required so as to prolong detector's useful life. Sensitivity should be tuned before sample analysis till the performance is satisfied.

Ⅱ. Determination

Prepare at lest three duplications of standard solution containing test element in the concentration range recommended by instrument, concentration increasing in turn, adding the corresponding regents as test solutions. Prepare aqueous solution with de-ionized water, unless specified otherwise. Initiate instrument according to the requirement, and analyze samples in turn according to concentration gradient. calibration curve with the average value of three numerical readings per concentration and corresponding concentration.

Prepare test solution according to the requirement of each kind of sample, keeping the estimated concentration of test element in the concentration range of calibration curve. Analyze test solution look up corresponding concentration from the standard curve, and calculate the content of

element.

During quantitative analysis, sample pipe should be inserted in the sample solution when sampling, while internal standard pipe should be kept laying in the corresponding internal standard element solution in the course of analysis. Internal standard element should generally be selected from natural rare elements which have similar mass with the test element.

Appendix XII

XII A Determination of Disintegration

Disintegration is provided to determine whether the solid preparations disintegrate disperse into fragments within a prescribed time and get through the wire gauze (except undissolved tablet coating material or fragments of capsule shell).

This method refers to the examination of disintegration of solid preparations under the prescribed conditions.

Disintegration is not required for the preparations which comply with the requirements for dissolution, drug release or disintegration.

1. Tablets

Apparatus The apparatus mainly consists of a basket-rack assembly with disks and a metallic device for raising and lowering the basket in the liquid medium at a constant rate between 30-32 cycles per minute through a distance of 55 mm±2 mm.

Basket-rack assembly The basket-rack assembly consists of six glass tubes, each 77.5 mm±2.5 mm long, 21.5 mm in internal diameter with a wall of 2 mm in thickness. The tubes are held in a vertical position by two transparent plastic plates, each 90 mm in diameter and 6 mm in thickness, with six holes, each about 26 mm in diameter. On the top of the upper plastic plate is a stainless-steel plate about 90 mm in diameter and 1 mm in thickness, with six holes each about 22 mm in diameter. Attached to the under surface of the lower plate is a disk of stainless-steel wire gauze about 90 mm in diameter, with apertures of 2.0 mm in internal diameter. A stainless-steel central shaft about 80 mm long is fixed with the upper plastic plate and stainless-steel plate. The stainless-steel plate, the two plastic plates and the wire gauze are fixed together by three screws (as Fig. 25).

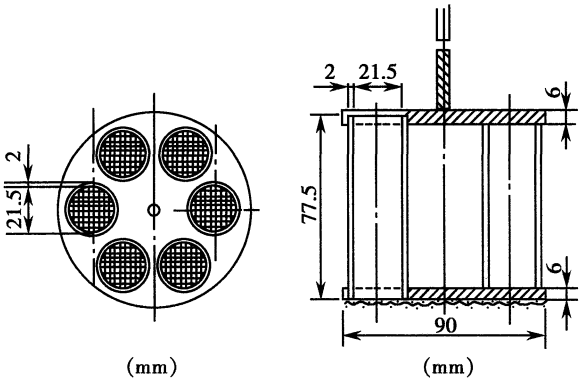

Fig. 25

Disks The disk is made of a smooth transparent plastic material having aspecific gravity of 1.18-1.20, 2.07mm± 0.15 mm in diameter, 9.5 mm±0.15 mm in thickness. It has five holes with 2 mm in diameter, one of the holes is located in the center and the others at an equal distance of 6 mm from the central hole. Equally spaced on the sides of the disk are four V-shaped notches. The dimensions of each notch are such that the upper openings are 9.5 mm wide and 2.55 mm deep and the lower opening are 1.6 mm wide and 1.6 mm deep (as Fig. 26).

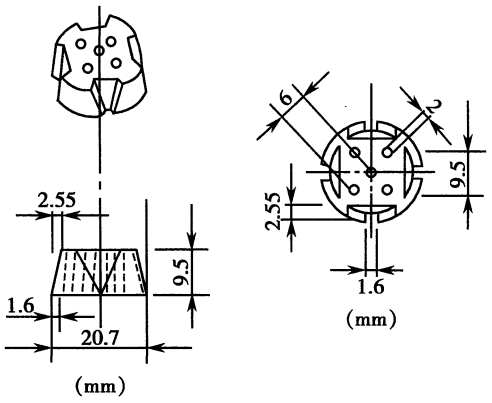

Fig. 26

Procedure The basket is suspended in a water bath preferably using a 1000 ml beaker, maintained at 37℃ ± 1℃, the volume of the fluid in the vessel is adjusted appropriately so that at the highest point of the upward stroke the wire mesh remains 15 mm below the surface of the fluid and descends to a distance not less than 25 mm from the bottom of the vessel on the downward stroke.

Unless specified otherwise, place 1 tablet in each of the six tubes of the basket, add disks and operate the apparatus. All of the powder tablets disintegrate completely within 30 minutes. All of extractum tablets and sugar-coated tablets disintegrate completely within 1 hour. If 1 tablet fails to disintegrate completely, repeat the test on 6 additional tablets. All of the tablets should comply with the requirement. If the test specimen adheres to the disk, repeat the test on further 6 tablets; all the tablets should comply with the test.

Film-coated tablets Comply with the test as described above. Replacing the water in the beaker with hydrochloric acid (9→1000), all of the tablets disintegrate within 1 hour. If any one of the tablets has not disintegrated, repeat the test on further six tablets; all the tablets should comply with the test.

Entric-coated tablets Entric-coated tablets are tested in the same way as described above using hydrochloric acid solution (9→1000) as the immersion fluid and the tablets show no evidence of cracking, disintegrating or softening in 2 hours. Remove the basket, wash the tablets with a small quantity of water, add a disk to each tube. Repeat the operation using phosphate BS (pH 6.8) as the immersion fluid, all tablets should disintegrate completely within 1 hour. If 1 tablet fails to comply with the test, repeat the operation with another 6 tablets. All the tablets should comply with the test.

Effervescent tablets Effervescent tablets are tested in the following way. Place 6 tablets in a 250 ml beaker containing 200 ml of water maintained at 15-25℃, numerous gas bubbles are evolved. When the evolution of gas around the tablet or its fragments has ceased the tablets dissolve or disperse in the water so that no agglomerates of particles remain. Unless specified otherwise, all of the tablets disintegrate within 5 minutes. If 1 tablet fails to disintegrate completely, repeat the test on 6 additional tablets. All of the tablets should comply with the requirement.

The tablets containing extractum, resin, lipid and much gelatinized starch comply with the requirement if a small part of the particles have soften and have no solid core even they haven't got through the wire mesh.

2. Capsules

For hard capsules or soft capsules, unless specified otherwise, repeat the test of tablets described above on 6 capsules The hard capsules should disintegrate within 30 minutes and the soft capsules disintegrate within 1 hour. For soft capsules, replacing the water in the beaker with simulated gastric fluid. If 1 of the capsules fails to disintegrate completely, repeat the operation with another 6 capsules. All the capsules should comply with the test.

For enteric capsules, unless specified otherwise, repeat the test described above on 6 tablets. Using hydrochloric acid solution (9→1000) as the immersion fluid and the capsules shells show no evidence of cracking, disintegrating within 2 hours. Remove the basket, wash the capsules with a small quantity of water, add a disk to each tube. Repeat the operation using simulated intestinal fluid as the immersion fluid, all capsules should disintegrate completely within 1 hour. If 1 capsule fails to comply with the test, repeat the operation with another 6 capsules. All the capsules should comply with the test.

It complies with the requirement if part of the particles have soften and have no solid core even they haven't got through the wire mesh.

3. Dripping pills

Carry out the test with the same apparatus as tablets using the stainless-steel wire gauze with apertures of 0.425 mm in internal diameter. Carry out the test as described above using 6 dripping pills. All the dripping pills disperse completely within 30 minutes, and the coated-dripping pills should disperse completely within 1 hour. If 1 of the dripping pills fails to disperse completely, repeat the operation with another 6 dripping pills. All the dripping pills should comply with the test. Dripping pills made of gelatin base may be tested in simulated gastric fluid.

Annotation *Simulated gastric fluid* Add about 800 ml of water and 10 g of pepsin to 16.4 ml of dilute hydrochloric acid, mix well, dilute with water to produce 1000 ml.

Simulated intestinal fluid Phosphate buffer solution (containing pancreatin) (pH 6.8) (Appendix ⅩⅤ D Buffer Solution).

Ⅺ B Disintegration Test for Suppositories and Vaginal Tablets

The test for disintegration of suppositories and vaginal tablets determines whether a solid dosage form such as suppositories and vaginal tablets can disintegrate, soften, dissolve or disperse under the specified experimental conditions.

1. Suppositories

Apparatus The apparatus is composed of a transparent sleeve and a metal device (as Fig. 27).

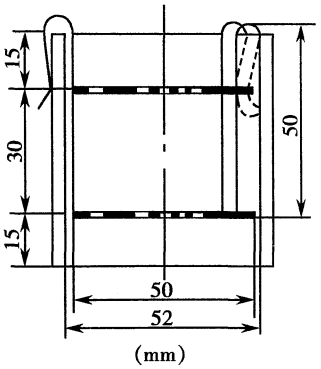

Fig. 27

Transparent sleeve The transparent sleeve is made of glass or suitable plastic, with a height of 60 mm, an internal diameter of 52 mm and an appropriate wall thickness.

Metal device The metal device consists of two stainless metal discs and three metal hooks. Each of the disc has a diameter of 50 mm and contains 39 holes, each 4 mm in diameter (as Fig. 28). The discs are separated by a distance of 30 mm. The metal device is attached to the outer sleeve by means of the three equally-spaced hooks.

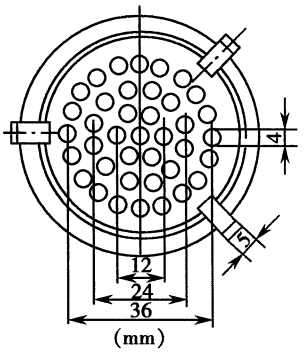

Fig. 28

Procedure Take 3 suppositories being examined and allow to stand at room temperature for 1 hour. Place them on the lower discs of 3 metal devices respectively, then insert the devices into separate sleeves and fix them by means of the hooks. Unless specified otherwise, place each piece of the above apparatus in 3 vessels separately, each containing not less than 4 litres of water at 37.0℃±0.5℃ and fitted with a slow stirrer and a means of holding the apparatus vertically 90 mm below the surface of water, after each 10 minutes invert each apparatus without allowing it to emerge from the liquid.

Interpretation Unless specified otherwise, all of the fat-based suppositories should disintegrate, soften or have no solid core offering resistance to pressure in not more than 30 minutes; all of the water-soluble based suppositories should completely dissolve in not more than 60 minutes. If one of the suppositories fails to comply with the requirements, repeat the test on 3 additional suppositories and all of them should comply with the requirements.

2. Vaginal tablets

Apparatus The apparatus is the same as that used for suppositories except that set the hook-end upside down in the vessel (as Fig. 29).

Procedure Adjust the water surface level until the holes of the upper metal disc are just covered by a uniform layer of

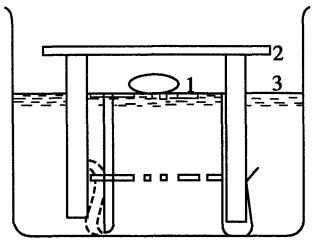

Fig. 29
1-Vaginal tablet; 2-Glass plate; 3-Water surface

water. Put 3 vaginal tablets being examined on separate upper discs and cover the apparatus with a glass plate to maintain appropriate humidity.

Interpretation Unless specified otherwise, all of the vaginal tablets should melt or disintegrate into fragments and pass through the perforated plates or only remain a small amount of soft masses which have no solid core within 30 minutes. If one of the tablets fails to comply with the requirements, repeat the test on 3 additional tablets and all of them should comply with the requirements.

Ⅻ C Minimum Fill

The following tests and specifications apply to solid, semisolid, and liquid dosage forms packed in containers in which the labelled net wight (volume) is not more than 500 g (ml), except those preparations for which the tests for weight variation of contents and volume in container are otherwise specified required or radio active pharmaceuticals.

Procedure ***Gravimetric method for containers labelled by weight*** Unless specified otherwise, select 5 containers (or 3 containers if the labelled quantity is more than 50 g), remove the cover and label. Thoroughly clean and dry the outside of the containers by suitable means, and weigh individually. Quantitatively remove the contents from each container, washing with a suitable solvent. Dry, and again weigh each empty container. Determine the net weight of contents in each container and the average net weight of contents. The results comply with the requirements. If one container fails the requirements a further 5 (or 3 of over 50 g) containers may be tested individually and all must comply.

Volumetric method for containers labelled by volume Unless specified otherwise, select 5 containers (or 3 containers if the labelled quantity is more than 50 ml). Open the containers with caution to avoid any loss of the contents. Take up individually the contents of each container into a dry, previously standardized graduated cylinder, if the labelled quantity is more than 50 ml. For viscous liquids, keep the containers upside down for 15 minutes to pour the contents as completely as possible. Measure the volume of the contents in each container, calculate the average volume of the contents. The results comply with the requirements. If one container fails the requirements, a further 5 (or 3 of over 50 g) containers may be tested and all must comply.

labelled quantity	solids, semisolids, liquids		viscous liquids(volumetric method)	
	average quantity	quantity in each container	average quantity	quantity in each container
less than 20 g(ml)	not less than the labelled quantity	not less than 93% of the labelled quantity	not less than 90% of the labelled quantity	not less than 85% of the labelled quantity
20-50 g(ml)	not less than the labelled quantity	not less than 95% of the labelled quantity	not less than 95% of the labelled quantity	not less than 90% of the labelled quantity
more than 50 g(ml)	not less than the labelled quantity	not less than 97% of the labelled quantity	not less than 95% of the labelled quantity	not less than 93% of the labelled quantity

Ⅻ D Determination of Plaster Softening Point

This is a method to determine the temperature of plaster when softened by heat under the prescribed conditions. By determining the temperature at which the plaster descends by 25 mm using the method below, it examines the degree of the hardness and reflects the viscosity indirectly.

Apparatus Softening point radiomete. The specimen ring(as Fig. 30)is a turbinate brass ring, 6.35 mm high, 17.46 mm in upper pore diameter and 15.88 mm in lower pore diameter. The steel ball localizer(as Fig. 31), 20.60 mm in internal diameter with the steel ball located in the center. The steel ball(as Fig. 32)is 9.53 mm in diameter and 3.50 g±0.05 g in weight. The upper of the bracket(as Fig. 33)is a deplanate brass board with two horizontal toroidal rings. It supports two specimen rings. The lower bracket is a deplanate lubricous brass board. The distance, from the bottom of the turbinate brass ring on the upper bracket to the supine surface of the lower bracket is 25 mm. The superficies inferia of the lower bracket is 16 mm±3 mm over the bottom of the beaker. Fig. 34 is the combined apparatus.

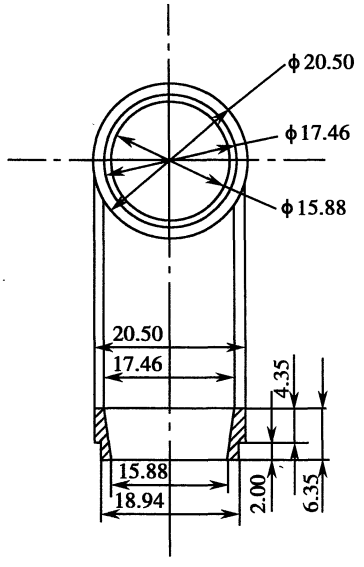

Fig. 30 The turbinate brass ring

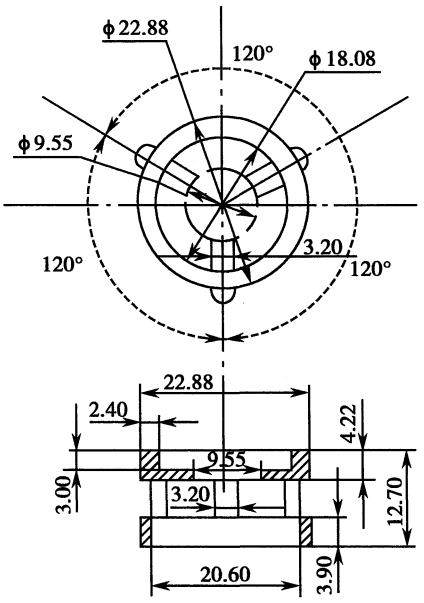

Fig. 31 The steel ball localizer

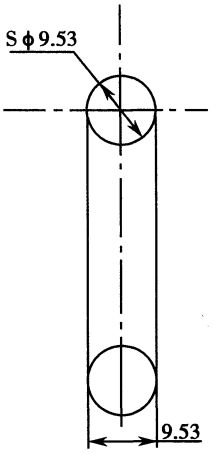

Fig. 32 The steel ball

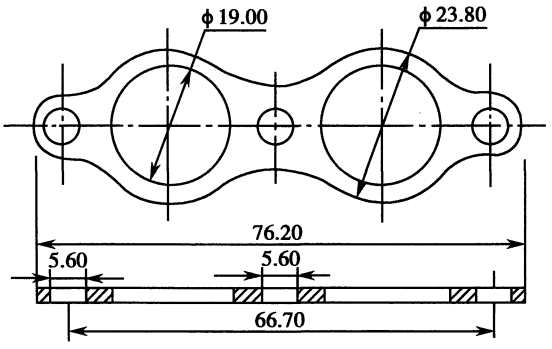

Fig. 33 The bracket

Procedure Place the specimen in baking oven to soft it by heat. Take out and scrape the plaster. Fill each of the two specimen rings with 1.8 g of the plaster. Place the specimen ring inverted on a tin foil which is smeared by some glycerine and tiled on a glass board. Heat it in a calorstat oven at the temperature of 75℃ ± 2℃ until the surface is level. Put the specimen in the toroidal rings of the bracket after 1 hour with the room temperature, fix the steel ball localizer. Place the steel ball localizer and the steel ball in a beaker of water bath at constant temperature of 37℃ ± 1℃. After 20 minutes for

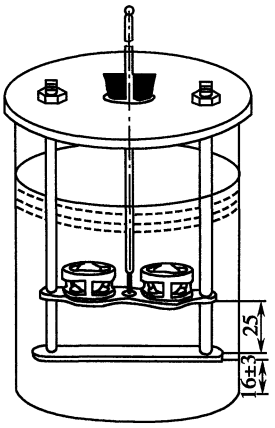

Fig. 34 The combined apparatus

balance, place the steel ball in the localizer and heat the bottom of the beaker with the temperature rising 1.0-1.5℃ per minute. Read the temperature on the thermometer (calibrated) when the steel ball touched the surface of the lower bracket. Take the mean value of the temperature as the softening point.

Ⅻ E Determination of Cataplasms Adhesion

This is a method to measure the adhesion of cataplasms applied to the surface of skin. Specified in an individual monograph, three indexes of measurement are initial adhesive power, maintaining adhesive power and peeling strength.

Method 1 (Determination of initial adhesive power)
Using ramp rolling method. Roll a stainless steel ball over the viscid side of the specimen on the tiltboard. Evaluate the viscosity according to the max number of the ball that the specimen can stick to.

Apparatus Composed by tiltboard, pedestal, stainless steel ball and take-over box. The tiltboard, about 2 mm in thickness, is a stainless steel board with the tilt angle of 15° or 30°. The pedestal can adjust and keep the apparatus horizontal. With soft material in inner wall, the take-over box is used to receive the rolling steel ball, The number and the specification should comply with the regulations below.

The number and the specification of the rolling steel ball

Number	Diameter/mm	Weight of per 1000/kg
1	0.794	0.002
2	1.588	0.016
3	2.381	0.055
4	3.175	0.132
5	3.969	0.257
6	4.763	0.440
7	5.556	0.702
8	5.953	0.86
9	6.350	1.03
10	7.144	1.50
11	7.938	2.06
12	8.731	2.66
13	9.525	3.55
14	10.319	4.43
15	11.113	5.64
16	11.509	6.20

continue

Number	Diameter/mm	Weight of per 1000/kg
17	11.906	6.93
18	12.303	7.5
19	12.700	8.42
20	13.494	10.1
21	14.288	12.0
22	15.081	14.1
23	15.875	16.5
24	16.669	19.1
25	17.463	21.9
26	18.256	25.0
27	19.050	28.4
28	19.844	32.4
29	20.638	36.2
30	22.225	45.2
31	23.019	50
32	23.8131	55.5
33	25.400	57.4
34	26.988	80.8
35	28.575	95.5
36	30.163	112.8
37	31.750	131.9
38	33.338	152
39	34.925	175
40	36.513	198.1
41	38.100	227.3
42	41.275	287.57
43	42.863	320.4
44	44.450	361
45	47.625	439.5
46	50.800	538.8

Procedure Remove the packing material of the specimen before test and put avoiding overlap at room temperature for more than 2 hours.

Place 3 tablets of the specimen in the center of the tiltboard (the tilt angle of 15° or 30° as specified in an individual monograph) with the plaster side upward. 10 cm of the upper part of the inclined plane and 15 cm of the lower are covered with terylene film of 0.025 mm in thickness. Plaster can be seen in 5 cm of the middle part (as Fig. 35). Roll the balls specified in an individual monograph from the top of the inclined plane freely.

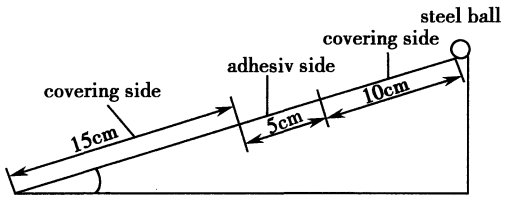

Fig. 35

2 or over 2 tablets of the 3 specimens should stick to the steel ball in the test. If 1 tablet fails, repeat the test with a smaller number or ball. It should succeed. If 1 tablet succeeds and the other 2 tablets only succeed in smaller number balls, repeat the test on 3 further tablets. It comply with the requirement only when all the tablets succeed.

Method 2 Determination of maintaining adhesive power

Paste the viscid side of the specimen to the surface of the test board, vertically standing. Hang a weight of specified mass in the length direction of the specimen. Record the time when the specimen falls off or the distance of displacement in a period of time.

Apparatus

Test shelf Composed of a pedestal adjusting the level and a bracket hanging and fixing the test board. The test shelf should keep the working plane of the test board hanging on the bracket in a vertical direction.

Test board A stainless steel board, 1.5-2.0 mm thick, 125 mm wide and 125 mm long, with the surface rugosity less than 0.4 μm. Replace the test board if there is permanent smut or seam on the surface.

Pressing roller a steel axle with rubber cladding of 2000 g.

Loading board The requirements of material, dimension and surface are the same to that of the test board.

Procedure Remove the packing material of the specimen before test and put avoiding overlap at room temperature for more than 2 hours.

Scrub the test board and loading board with wiping material dipping abluent, use clean gauze to wipe dry. Repeat the operation above over 3 times so that the working plane is clean. The clean working plane should not get in touch with hands or other objects. Paste the specimen onto the middle of the test board and loading board with a pressing roller of 2000 g rolling over 3 times. After 20 minutes, fix the test shelf and record the beginning time of the test.

Remove the weight when the specified time passes. Measure the displacement of the specimen, or record the time when the specimen falls off the test board. Take the arithmetic mean of the displacement or the time of a group of specimen as the results.

Method 3 (Determination of peeling strength)

Determined by 180° peeling strength test.

Apparatus

Tensile force test machine The destroy load should be between 15% and 85% of the full load, and the error of the force should be less than 1%. The test machine peels consecutively at the speed of 300 mm/min ± 10 mm/min. There should be a plotting apparatus that could auto-record the peeling load.

Test board A stainless steel board, 1.5-2.0 mm thick, 50 mm±1 mm wide and 125 mm±1 mm long.

Polyester film Specified in JB 1256-77 (6020 polyester film), 0.025 mm in thickness about 110 mm in length and about 20 mm wider than the specimen.

Procedure Remove the packing material of the specimen before test and put avoiding overlap at room temperature for more than 2 hours.

Fix the specimen to the test board with double-faced rubberized fabric. If necessary, fix the upper and the nether sides of the specimen with adhesive tape to make it level.

Paste the viscid side of the specimen with the clean polyester film, roll a pressing roller of 2000 g over the specimen 3 times to prevent the creation of bubbles in splicing. The specimen can be tested after 20-40 minutes.

Fold the polyester film in half (180°). The free ends of the polyester film and the test board are clapped to the test machine together. The peeling plane and the test machine should be in one level. The test machine peels consecutively at the speed of 300 mm/min ± 10 mm/min. Take the arithmetic mean of the peeling strength as the results. The peeling strength of the specimen σ (kN/m) is calculated by the equation below.

$$\sigma = (S/LB) \cdot C$$

Where S is the area of the curve in the value-selective range, mm^2;

L is the length of the curve in the value-selective range, mm;

B is the actual width of the specimen, mm;

C is the load of unit height of the record paper, kN/m.

Appendix XIII

XIII A Test for Pyrogens

The test for pyrogens is carried out in rabbits by measuring the rise of body temperature following the intravenous injection of a specified dose of the preparation being examined.

Test animal Use healthy, matured rabbits weighing 1.7-3.0 kg, male or non-pregant female. Keep the rabbits under observation for 7 days before the selection test, loss of weight, loss of appetite or other abnormal signs should not appear. Within 3-7 days prior to pyrogen test, rabbits which have not previously been used in a pyrogen test should be subject to a selection test as prescribed under the *procedure* except injection. Record the body temperature of each rabbit 8 times successively at 30 min intervals, if the recorded body temperatures of a rabbit are all in the range of 38.0-39.6℃, and the difference between the highest and lowest temperature is not greater than 0.4℃, it is fit for the pyrogen test. Do not use a rabbit more than 10 times and more frequently than once every 48 hours. The selection test should be repeated if a rabbit is to be used again after a break of 3 weeks, or if it has a maximum temperature rise of 0.6℃ or more in a previous pyrogen test. All rabbits which have been used in a pyrogen test in which the preparation being examined was adjudged to be pyrogenic should not be used again.

Test conditions House the rabbits in a living area of uniform temperature (a temperature which does not differ by more than 5℃ from that of the laboratory where the test is to be conducted) 1-2 days before the test. Conduct the pyrogen test in a laboratory of 17-25℃ and free from disturbances. During the test, the variation of room temperature should not be more than 3℃. Withhold food from the rabbits and place the animals in suibable boxes at least 1 hour before the test, until the test is completed. Measure the body temperature with a suitable temperature-sensing device with a precision of ±0.1℃. Insert the thermometer or temperature sensing probe into the rectum of the rabbit to an uniform depth (about 6 cm) for not less than 1.5 minutes. Record the body temperature of each rabbit once at an interval of 30 minutes, usuall measure twice. The difference between the two readings taken immediately before injection should not be greater than 0.2℃, use the mean value of these two readings as the normal body temperature of each rabbit. In any one test, the normal body temperature of each rabbit must be within 38.0-39.6℃ and must not differ from one another by more than 1℃.

Render the syringes, needles and glassware free from pyrogens by heating at 250℃ for 30 minutes or by any other suitable method.

Procedure Warm the preparation being examined to about 38.0℃. Within 15 minutes after the determination of normal body temperature, inject a dose as specified in the monograph into the ear vein of each of 3 rabbits slowly. Record the temperature of each rabbit once at an interval of 30 minutes, measure 6 times after the injection. The temperature rise of each rabbit is calculated by subtracting its normal temperature from the highest temperature recorded. If one of the 3 rabbits shows a temperature rise of 0.6℃ or more; or none of the 3 rabbits shows a temperature rise of 0.6℃ or more, but the sum of the 3 temperature rises exceeds 1.4℃, repeat the test with 5 other rabbits using the same procedure.

Evaluation of the results If none of the 3 rabbits in the first test shows a temperature rise of 0.6℃ or more, and the sum of the 3 temperature rises does not exceed 1.4℃; or if only one of the 5 rabbits in the second test shows a temperature rise of 0.6℃ or more, and the sum of the 8 temperature rises does not exceed 3.5℃, the preparation being examined passes the test. If more than one rabbits in either test show a temperature rise of 0.6℃ or more; or the sum of the 8 temperature rises exceed 3.5℃, the preparation being examined is considered to be pyrogenic.

When the temperature rise is negative, the result is counted as a zero response.

XIII B Test for Sterility

The test for sterility is a method to detect whether raw materials, preparations or other articles, which are required to be sterile according to the Pharmacopoeia, are aseptic. However, a result conforming with the requirements only indicates that no contaminating micro-organism has been found in the sample examined under the conditions of the test.

Test for sterility should be carried out in a class 100 laminar-air-flow cabinet located within a 10 000-class clean-room, or an isolator. The whole process should be performed under strictly aseptic conditions to avoid any microbial contamination. The cleanliness of working areas including laminar flow cabinet, working bench, background room should be monitored regularly according to the current national standard such as The detecting method for airborne particles, airborne microbe and settling microbe in the clean room (area) of the pharmaceutical industry. The isolator should be validated according to the relevant requirements, the cleanliness of inner isolator space should also comply with aseptic requirements.

Culture media

Media preparation

Media for the test may be prepared as described below, dehydrated media may be used provided that they have same ingredients and comply with the requirements. Media should be sterilized using a validated process. Store at a temperature between 2℃ and 25℃ and protect from light. If the prepared media are stored in unsealed containers, they can be used in 3 weeks. If stored in suitable sealed containers, the media can be used in 1 year.

1. Fluid thioglycollate medium (for culturing aerobic bacteria and anaerobic bacteria)

Pancreatic digest of casein	15.0 g
Glucose	5.0 g
L-Cystine	0.5 g
Sodium thioglycollate or	0.5 g
(or Thioglycollic acid)	(0.3 ml)
Yeast extract	5.0 g
Sodium chloride	2.5 g
0.1% Resazurin solution (freshly prepared)	1.0 ml
Agar	0.75 g
Water	1000 ml

Mix the above ingredients in water except glucose and resazurin solution, heat until dissolved, adjust pH to slightly alkaline, boil and filter, add glucose and resazurin solution, mix, adjust the pH so that after sterilization the solution will have a pH of 7.1 ± 0.2. Dispense the medium in suitable containers which provide a ratio of surface to depth of medium such that no more than the upper half of the medium has undergone a colour change (pink colour) indicative of oxygen uptake at the end of the incubation period. Sterilize using a validated process. When ready for use, not more than the upper one-fifth of the medium has acquired a pink colour, otherwise, the medium can be restored only once by heating the containers in a water-bath until the pink colour disappears (no more than 20 minutes), cooled quickly, taken care to prevent the introduction of non-sterile air into the container.

Fluid Thioglycollate Medium is to be incubated at 30-35℃.

2. Modified Martin medium (for culturing fungi)

Peptone	5.0 g
Yeast extract	2.0 g
Glucose	20.0 g
Dipotassium hydrogen phosphate (K_2HPO_4)	1.0 g
Magnesium sulfate ($MgSO_4$)	0.5 g
Water	1000 ml

Mix the above ingredients in water except glucose, heat until dissolved, adjust pH to about 6.8, boil, add glucose, mix, filter, adjust the pH so that after sterilization the solution will have a pH of 6.4 ± 0.2, dispense the media into containers and sterilize using a validated process.

Improved Martin medium is to be incubated at 23-28℃.

3. Selective medium

Before sterilization or innoculation, add proper quantity of suitable neutralizer or surface-active substance, such as polysorbate 80 (used in test for sterility for water insoluble substances) etc. to each of the media described above. The quantity of neutralizer or surface-active substance should be validated.

4. Nutrient broth medium

Peptone	10.0 g
Beef powder	3.0 g
Sodium chloride	5.0 g
Water	1000 ml

Mix the above ingredients in water, heat until dissolved, adjust pH to slightly alkaline, boil, filter, adjust the pH so that after sterilization the solution will have a pH of 7.2 ± 0.2, dispense the media into containers and sterilize using a validated process.

5. Nutrient broth agar medium

Add 14.0 g agar to nutrient broth medium as described above, adjust the pH so that after sterilization, the solution will have a pH of 7.2 ± 0.2, dispense the media into containers and sterilize using a validated process.

6. Modified Martin agar medium

Add 14.0 g agar to Improved Martin medium as described above, adjust the pH so that after sterilization the solution will have a pH of 6.4 ± 0.2. Dispense the media into containers and sterilize using a validated process.

Suitability Tests of Medium The media used in the test for sterility, as described above, should comply with the following sterility and sensitivity tests, carried out before or in parallel with the test on the product to be examined.

Sterility Incubate no less than 5 vessels of each batch of sterilized medium at the specified incubation temperature for 14 days. Growth of microorganisms should not occur.

Test for sensitivity of medium

Test strains The viable microorganisms used in the test must not be more than five passages removed from the original master seed lot. The suitable seed-stock technique should be used so that the microorganism characters can be maintained.

Staphylococcus aureus	[CMCC (B) 26003]
Pseudomonas aeruginosa	[CMCC (B) 101041]
Bacillus subtilis	[CMCC (B) 63501]
Clostridium sporogenes	[CMCC (B) 64941]
Candida albicans	[CMCC (F) 98001]
Aspergillus niger	[CMCC (F) 98003]

Preparation of inoculum Inoculate freshly cultured *Staphylococcus aureus* or *Pseudomonas aeruginosa* or *Bacillus subtilis* into nutrient agar medium or nutrient broth medium *and freshly cultured Clostridium sporogenes* into fluid thioglycollate medium, incubate at 30°-35° for 18-24 hours. Inoculate freshly cultured *Candida albicans* into Modified Martin medium or Modified Martin agar medium, incubate at 23°-28° for 24-48 hours, prepare suspension, with the above cultures, containing less than 100 cfu microorganisms per ml with sterile 0.9% w/v sodium chloride solution. Inoculate freshly cultured *Aspergillus niger* into Modified Martin agar medium, incubate at 23°-28° for 5-7 days until good sporulation is obtained. Wash the *Aspergillus niger* spore culture and transfer it to sterile tube, prepare spore suspension containing less than 100 cfu per ml with sterile 0.9% w/v sodium chloride solution.

Inoculation of medium Take 9 containers of fluid thioglycollate medium (containing 12 ml medium per container), inoculate 2 containers of the medium with less than 100 cfu test microorganisms of *Staphylococcus aureus*, *Pseudomonas aeruginosa*, *Bacillus subtilis* and *Clostridium sporogenes* respectively, and the remaining uninoculated culture medium (one container) is used as blank control, then incubate for not more than 3 days. Take 5 containers of Modified Martin medium (containing 9 ml medium per container), inoculate 2 containers of the medium with less than 100 cfu test microorganisms of *Candida albicans and Aspergillus niger* respectively, and use the remaining uninoculated culture medium (one container) as blank control, incubate for not more than 5 days. Observe the test containers for growth of the microorganisms every day during the incubation.

Evaluation of results The blank control must be no growth of microorganisms. If a clearly visible growth of the microorganisms occurs in an inoculated culture medium, the medium meets the requirement of the test for sensitivity of medium.

Diluents and rinsing fluids

1. 0.1% Peptone solution Dissolve 1.0 g of peptone in 1000 ml of water, heat until dissolved, adjust the pH to 7.1 ± 0.2, filter and dispense into containers. Sterilize using a validated process.

2. pH 7.0 sodium chloride-peptone buffer Mix 3.6 g KH_2PO_4, 7.2 g Na_2HPO_4, 4.3 g sodium chloride and 1.0 g peptone in 1000 ml of water, heat until dissolved, filter and dispense into containers. Sterilize using a validated

process.
If necessary, Add suitable neutralizer or surface-active substance to each of the diluents or rinsing fluids described above before or after sterilization

Validation test

In the course of establishing sterility testing method for product to be examined, the method must be verified to ensure that the adopted method is suitable for sterility test of the product. Whenever there is a change of drug composition or experimental conditions of the test, the testing method must be revalidated. Validation test is to be conducted as described below under Test for sterility of the product being examined using exactly the same methods and the following instructions. The tests should be performed separately for each of the microorganism tested.

Tested strains and preparation of inoculum Same as the test for sensitivity of medium described above.

Membrane filtration Filter the specified quantity of the test specimen with Membrane filtration apparatus, rinse the membrane, add test microorganism with less than 100 cfu to the final portion of rinsing fluids, filter again. Transfer the membrane filter into fluid thioglycollate medium or Modified Martin medium, or add the medium to the filtration apparatus containing the membrane. Use another container containing the same volume of the medium, then add the same amount of test microorganisms as control. Incubate the containers at Specified temperature for 3-5 days. Repeat the procedure for each of the test microorganism tested.

Direct Inoculation Take 8 containers containing certain required volume of fluid thioglycollate medium for direct Inoculation, inoculate into 2 containers of each of medium with less than 100 cfu test microorganisms of *Staphylococcus aureus*, *Pseudomonas aeruginosa*, *Bacillus subtilis* and *Clostridium sporogenes* separately. Take 4 containers containing Modified Martin medium complying with the required volume for direct Inoculation, inoculate into 2 containers of each of the medium with less than 100 cfu test microorganisms of *Candida albicans and Aspergillus niger* separately. Add specified quantity of the product being tested to one of the inoculated containers of each test microorganism, the other inoculated container is for control. Incubate the containers at specified temperature for 3-5 days.

Evaluation of results Compare with the control container, if clearly visible growth of each test microorganisms is obtained in the test containers containing the product to be tested, visually either the product possesses no antimicrobial activity under the conditions of the test or such activity has been satisfactorily eliminated. The test for sterility of the product being examined may then be carried out using the same method and conditions of the test. If the growth of test microorganisms is not obtained, or poor, or slow in any tested container, visually comparable to that in the control container without product, then the product with the specified quantity possesses antimicrobial activity under the conditions of the test. In such a case, modify the conditions in order to eliminate the antimicrobial activity by using a large amount of rinsing fluid, or increase the volume of medium, or using suitable neutralizer or inactivator such as β-lactamase or p-aminobenzoic acid, or replacing the type of the membrane filter used etc. and repeat the validation test. The validation may also be performed simultaneously with the Test for sterility of the product being examined.

Test for sterility of the product being examined

Number of products to be tested It is the number of the minimum package of the product to be examined for test for sterility once. Unless otherwise specified, test the number of products is specified in Table 1. The number of the products for positive control test is not included in table 1.

Quantity of product to be tested It is the minimum quantity (g or ml) of the product in test for sterility once. Unless otherwise specified, the minimum quantity of the product for each medium are defined in table 2 and table 3. When using the technique of direct inoculation, if the contents in a single container are sufficient to inoculate two containers of medium, they should be transferred to fluid thioglycollate medium and Modified Martin medium respectively. When using the technique of membrane filtration, the quantity of the products to be tested should not be less than the whole quantity used in direct inoculation, whenever permitted, the whole contents of each container should be filtered for testing.

Positive control The microorganisms for positive control should be selected according to the nature of the product being examined. *Staphylococcus aureus* is used for the product possessing no antimicrobial activity or mainly anti-gram-positive-bacteria activity. Encherichia coli is used for the product mainly possessing anti-gram-negative-bacteria activity. *Clostridium sporogenes* is used for the product possessing anti-anaerobic bacteria activity. *Candida albicans* is used for the product possessing fungistatic activity. Preparation of the inoculums for positive control is the same as described under the Test for sensitivity of medium (E. Coli inoculums preparation is same as *Staphylococcus aureus* inoculums), number of test microorganism added should be less than 100 cfu, the quantity of the product used is the same as described under the Test for sterility of the product being examined for each container of medium. Incubate the positive control container for 48-72 hours, the growth of the test microorganisms should be well.

Negative control In the course of the sterility test for examined product, a negative control should be performed with the same solvent and diluents as the test used. There must be no growth of microorganisms.
If surface-active substances, neutralizers or inactivators etc. are used during the test, their efficacy and their absence of inhibition for growth and survival of microorganisms must be demonstrated.
The test for sterility is carried out by the membrane filtration method or direct Inoculation method. The membrane filtration method is used whenever the nature of the product permits. The same method and experimental conditions should be adopted in sterility test as that used in validation test.
Before opening the product containers to be tested, the exterior surfaces of containers must be thoroughly cleansed with a suitable disinfectant. If the containers are packaged under vacuum, sterile air should be transmitted into the container aseptically with suitable equipments (eg. Needles with sterilizing filter) before the container is opened to release the contents.

Sample preparation and medium inoculation
Unless otherwise specified, Carry out the test as described below.

1. Membrane filtration method
Sealed sterility testing system may be preferred used in the technique of membrane filtration. Other general membrane filter may also be adopted. The membrane used in the test for sterility has a nominal pore size which is not greater than 0.45 μm and a diameter about 50 mm. Selection of filtration membrane type should be performed according to the characters of product to be tested and solvent used. The filtration apparatus and membrane should be sterilized by appropriate means before use. Integrality of the membrane in the apparatus should be kept during the process filtration.

When filtering aqueous solution, the membrane in the filter should be pre-wetted with a small quantity of rinsing fluids. When the samples tested are oily preparations, the filtration apparatus and membrane must be thoroughly dried before use. the sample solution and rinsing fluid should be kept to always cover the whole surface of the membrane throughout the operation for maximal filtration efficiency. If necessary, wash the membrane by filtering through it with 100 ml of rinsing fluid for one single membrane each time, and the total volume used should not be too much to avoid any damage to the microorganisms held by the membrane, after filtering the sample solution

Aqueous solutions Transfer the specified quantity of samples tested directly into the membrane or membranes, or mix the samples into an aseptic vessels containing suitable quantity of the sterile diluent and transfer the mixture to the the membrane or membranes. Filter immediately. If the product being examined contain preservatives or have inherent antimicrobial activity, the membrane should be washed not less than three times by filtering through it with suitable quantity of the rinsing fluid. If sealed sterility testing system is used, transfer 100 ml of fluid thioglycollate medium and Modified Martin medium into the correspondence filter apparatus respectively after washing. If other general membrane filters are used, aseptically remove the membrane from the apparatus and cut it into three equal parts, and transfer each part to each of container containing 50 ml of suitable media, set one of the container as a positive control.

Solid soluble in aqueous vehicle Transfer the specified quantity of specimens tested, dissolve with suitable sterile diluent or as directed in the label. Proceed with the test as directed above for aqueous solutions.

Water insoluble substances Transfer the specified quantity of specimens and filter directly, or mix in a sterile diluent containing polysorbate 80 or other suitable emulsifying agent, and transfer it into the membrane or membranes. Filter immediately. Wash the membrane at least three times with rinsing fluid containing 0.1%-1% polysorbate 80. The membranes are inoculated to medium with or without containing polysorbate 80. Inoculate medium as directed above for Aqueous solutions.

Ointments and Viscous oils soluble in isopropyl myristate Mix specified quantity of specimens tested in suitable quantity of sterile isopropyl myristate, shake vigorously to completely dissolve the sample. If necessary, heat the mixture to not more than 44℃, Filter as rapidly as possible before the mixture cools down. In exceptional case when the mixture is unable to be filtered, more than 100 ml diluents should be added to the above mixture, shake sufficiently and extract the solution, then transfer the aqueous phase in underlayer into the membrane or membranes and filter immediately. Proceed washing membrane and inoculating medium as described above for water insoluble substances.

Sterile aerosol (or nebulization) products Transfer the specified quantity of product containers tested to a refrigeratory, and freeze for about 1 hour. Aseptically drill quickly a hole in the top end of each container and release the propellant, then open the container aseptically. Proceed as directed above for aqueous solutions or water insoluble substances, whichever applicable.

Prefilled syringes with drug Take the specified quantity of specimens tested, fit a sterile needle on the syringe (not included in the product package). If necessary, dissolve with suitable sterile diluent or with solvent specified by product label. Proceed with the test as directed above for Aqueous solutions or water insoluble substances, whichever applies. Needles included in the product package should also be tested for sterility using direct inoculation method.

2. Direct Inoculation method

Direct Inoculation method is to directly transfer the specified quantity of product tested into fluid thioglycollate medium and Modified Martin medium respectively. In each container Incubated, the volume of samples tested is not more than 10% of the volume of the medium, and the volume of fluid thioglycollate medium should not be less than 15 ml, the volume of Modified Martin medium should not be less than 10 ml, unless otherwise specified. Use the same medium volume and height in the container as in Validation test. Inoculate the same number of containers for each medium as the number of products to be tested.

Turbid aqueous solution Transfer the specified quantity of specimens tested into each culture medium.

Solid articles Directly transfer specified quantity of specimens tested into each culture medium, or prepare a suspension of the product with suitable sterile diluent or as directed in the label, then transfer the specified quantity of specimens into each culture medium.

Water insoluble substances Transfer the specified quantity of specimens tested to a sterile container, add the dilution containing suitable quantity of polysorbate 80 or other emulsifying agent to the container and mix to emulsify the specimens. Inoculate the suspension prepared above into each culture medium. Alternatively, Transfer directly the specified quantity of specimens into each culture medium containing polysorbate 80 or other emulsifying agent.

Incubation and observation

Incubate all medium containers above for 14 days at required temperature. Observe and record each medium container for evidence of microbial growth every day during incubation period. If the product being tested renders medium turbid so that the presence or absence of microbial growth can not be readily determined by visual examination, 14 days after the beginning of incubation. transfer suitable portions of the medium to fresh containers with the same kind of medium or slants, and incubate the fresh containers 2 days for bacteria and 3 days for fungi, then examine the fresh containers for evidence of microbial growth; or smear a small amount of the medium on a slide, stain and examine with microscope for the suspected microbial growth.

Evaluation of results

Except the positive control container, if no evidence of microbial growth is found in all of the test containers described above, the product to be examined complies with the test for sterility; if evidence of microbial growth is found in any one of the test containers, the product to be examined does not comply with the test for sterility, unless it can be clearly demonstrated that the test was invalid for causes unrelated to the product to be examined. The test may be considered invalid only when one or more of the following conditions are fulfilled:

(1) The result of the microbiological monitoring of the sterility testing facility shows that it does not meet the requirements of the test for sterility,

(2) A review of the testing procedure used during the test in question reveals a fault.

(3) Microbial growth is found in the negative control container.

(4) After determination of the identification of the microorganisms isolated from the test, the growth of this species (or these species) may be ascribed unequivocally to faults in respect with the material or the technique used in conducting the sterility test procedure.

If the test is validated to be invalid, it should be repeated with the same number of the samples and procedure as in the

original test. If no evidence of microbial growth is found in the test repeated, the product examined complies with the test for sterility; if microbial growth is found, the product examined does not comply with the test for sterility.

Table 1 Minimum number of product to be tested from each batch

Product to be tested	Number of items in the batch	Minimum number of items to be tested for each medium *
Parenteral preparations	Not more than 100	10% or 4 containers, whichever is the greater
	More than 100 but not more than 500	10 containers
For large-volume parenteral preparations (more than 100 ml)	More than 500	2% or 20 containers, whichever is less 2% or 10 containers, whichever is less
Ophthalmic and other noninjectable preparations	Not more than 200 containers	5% or 2 containers, whichever is the greater
	More than 200	10 containers
Bulk solid products	Up to 4	Each container
	More than 4 containers, but not more than 50 containers	20% or 4 containers, whichever is greater
	More than 50 containers	2% or 10 containers, whichever is greater

* If the content of one container are not sufficient to inoculate the two media, this number may be doubled.

Table 2 Minimum quantity of liquid product to be used for each medium

Quantity per container	Minimum quantity per container to be used for each medium
Not more than 1 ml	The whole contents of each container
more than 1 ml, and less than 5 ml	Half the contents of each container
Not less than 5 ml, and less than 20 ml	2 ml
not less than 20 ml, and less than 50 ml	5 ml
not less than 50 ml, and less than 100 ml	10 ml
not less than 50 ml, and less than 100 ml(Intravenous)	Half the contents of each container
not less than 100 ml, and not more than 500 ml	Half the contents of each container
not less than 500 ml	500 ml

Table 3 Minimum Quantity of solid product to be tested for each medium

Quantity per container	Minimum quantity per container to be used for each medium
Less than 50 mg	The whole contents of each container
not less than 50 mg, and less than 300 mg	Half the contents of each container
not less than 300 mg, and less than 5 g	150 mg
Not less than 5 g	500 mg

XIII C Microbial Limit Tests

Microbial limit tests provide tests for the estimation of the number of viable micro-organisms present in non-sterile pharmaceutical products of all kinds, including preparations, raw materials, excipients. The bacteria, fungi or yeasts count, as well as the specified bacteria, are tested.

Microbial limit tests should be carried out in a class 100 laminar-air-flow cabinet located within a 10000-class clean-room. The whole process should be performed under strictly aseptic conditions to avoid any microbial contamination. The cleanliness of working areas including laminar flow cabinet, working bench, background room should be monitored regularly according to the current national standard such as **The detecting method for airborne particles, airborne microbe and settling microbe in the clean room (area) of the pharmaceutical industry.**

Surfactants, neutralizing agents, or inactivators do not affect the growth of micro-organisms if they are used in the products to be examined.

Unless otherwise prescribed, incubate bacteria at 30-35℃, at 23-28℃ for fungi or yeasts, and at 35-37℃ for specified bacteria.

The test result is reported in the unit of 1 g, 1 ml, 10 g, 10 ml, or 10 cm^2.

Quantity of products to be tested

It refers to the quantity of the product to be examined for one single test (in g, ml, or cm^2).

Unless otherwise prescribed, use samples of 10 g or 10 ml of the product to be examined for testing. Use 50 cm^2 for pellicles. The quantity may be appropriately decreased for expensive drugs and small-package drugs. Increase the quantity by 10 g or 10 ml when *Salmonella* is tested.

Select the samples at random from at least 2 minimum containers, and at least 4 pieces for honeyed pills or pellicles.

The quantity of sampling (from at least 2 minimum containers) is 3 times the quantity for testing.

Preparation of the sample

Samples are prepared appropriately depending on their physico-chemical properties and biological characteristics. If necessary, samples are warmed in a water bath not more than 45℃. The samples are inoculated to the culture media within one hour of preparation.

Unless specified otherwise, follow the methods below to prepare the samples.

1. Liquids

Take 10 ml of the product, dilute to 100 ml with sterile sodium chloride-peptone buffer (pH 7.0), mix well. Use this 1 : 10 solution as the test solution. Add an appropriate amount of sterile polysorbate 80 to an oil to make it dispense evenly. For aqueous preparations, the products may be mixed as the test solution.

2. Solids, semi-solids, and viscous products

Take 10 g of the product, dilute to 100 ml with sterile sodium chloride-peptone buffer (pH 7.0), mix well with a homogenizer or other devices. Use this 1 : 10 solution as the test solution. If necessary, add an appropriate amount of polysorbate 80 and warm the sample in a water bath so that it dispense evenly.

3. Sample specified preparation

(1) Non-aqueous products.

Method I Transfer 5 g (or 5 ml) of the product into a sterile beaker containing 5 g melt (not exceeding 45℃) Span 80, 3 g glyceryl monostearate, 10 g polysorbate 80, mix, slowly add sterile sodium chloride-peptone buffer (pH 7.0, 45℃) to 100 ml with agitating to make an emulsion. Use this 1 : 20 emulsion as the test solution.

Method II Transfer 10 g of the product to a suitable container with 20 ml sterile isopropyl myristate (prepared as described under Sterility test, the amount may be increased if necessary) and sterile glass beads, agitate thoroughly to dissolve the product. Then add 100 ml sterile sodium chloride-peptone buffer (pH 7.0, 45℃), agitate for 5-10 min for extraction. Allow it to stand until the two layers separate. Use the 1 : 10 aqueous layer as the test solution.

(2) Pellicles
Take 50 cm^2 of the pellicles, cut into pieces. Immerge into an appropriate amount of sterile sodium chloride-peptone buffer (pH 7.0, usually 1 ml or 2 ml per 1 cm^2), and agitate. Use the 1 : 10 or 1 : 20 diluent as the test solution.

(3) Enteric-coated and colonic-coated products
Transfer 10 g of the product to 100 ml sterile phosphate buffer solution (pH 6.8 for enteric-coated and pH 7.6 for colonic-coated), warm in a 45℃ water bath, and shake so that it dissolves. Use this 1 : 10 solution as the test solution.

(4) Aerosols and sprays
Chill a prescribed amount of the product in a refrigerator for approximately 1 hour. Take it out, dig a small hole rapidly and aseptically. Put it at room temperature and allow the propellant to escape. Transfer all the residue with a sterile syringe, add an appropriate amount of sterile sodium chloride-peptone buffer (pH 7.0, add an appropriate amount of sterile polysorbate 80 for water-insoluble ingredients), and mix well. Take a sample equivalent to 10 g or 10 ml, and dilute by 10 folds. Use this 1 : 10 solution as the test solution.

(5) Products containing antimicrobial agents
When the products to be examined possess antimicrobial activities, eliminate the activity before the test. Follow the methods described below.

①Culture media dilution Transfer the prescribed amount of the product to an adequate volume of culture media. Thus the concentration of the product decreases until it possesses no antimicrobial activity. For the limit test of bacteria, fungi, and yeasts, distribute 2 ml of the diluted solution over Petri dishes. Add agar media, mix well, and allow it to solidify. Incubate the dishes under appropriate conditions. Count the average number of colonies obtained with 1 ml of the solution. Report the counts by the plate-count method. The amount of diluting culture media may increase when specified bacteria are tested.

②Enrichment of microorganisms by centrifugation
Centrifuge a specified quantity of the product at 3000 rpm for 20 minutes. If the product contains precipitates, centrifuge at 500 rpm for 5 minutes at first, and then collect the supernatant and centrifuge again as described above. Discard the supernatant and dilute the residue at the bottom (about 2 ml) to orginal specified quantity with diluting solution.

③Membrane filtration See the membrane filtration method under Bacteria, fungi, and yeasts count.

④Neutralization If the product to be examined contains antimicrobial agents like mercury, arsenic, or antiseptics, use suitable neutralizing agents or inactivators to eliminate its antimicrobial activity. The neutralizing agents or inactivators may be added in the diluting solutions or culture media.

Bacteria, fungi or yeasts count

Method validation
The bacteria, fungi or yeasts count method for microbial limit tests is validated before it is used for drugs. The count method is re-validated if changes in composition of the product or testing conditions may affect the result.
Validation test is to be conducted as described under Bacteria, fungi or yeasts count using exactly the same methods and the following instructions. The tests should be performed separately for each of the microorganism tested.

Test strains
The viable microorganisms used in the test must not be more than five passages removed from the original master seed lot. The suitable seed-stock technique should be used so that the microorganism characters can be maintained.

Escherichia coli	[CMCC (B) 44102]
Staphylococcus aureus	[CMCC (B) 26003]
Bacillus subtilis	[CMCC (B) 63501]
Candida albicans	[CMCC (F) 98001]
Aspergillus niger	[CMCC (F) 98003]

Preparation of Inoculum Inoculate freshly cultured of *Escherichia coli*, *Staphylococcus aureus*, or *Bacillus subtilis* to nutrient broth medium or nutrient agar medium, incubate for 18-24 hours; Inoculate freshly cultured of *Candida albicans* to modified Martin medium or modified Martin agar medium, and incubate for 24-48 hours; The above cultures are diluted to 50-100 colony-forming units (cfu) per ml with sterile solution of 0.9% sodium chloride. Inoculate freshly cultured of *Aspergillus niger* to modified Martin agar medium, and incubate for 5-7 days. Wash out the spores with 3-5 ml sterile solution of 0.9% sodium chloride. Transfer the spore suspension to a sterile test tube. Dilute the suspension to 50-100 cfu per ml with sterile solution of 0.9% sodium chloride.

Validation test Carry out at least 3 parallel tests, and calculate the recovery of micro-organisms for each test.

(1) Testing group When the plate count method is used, transfer 1 ml of the lowest possible serial dilution of the sample and 50-100 cfu testing micro-organisms to a Petri dish, and pour the agar medium immediately. Use 2 Petri dishes for each microbial strain, and record the colony number by the plate count method. When the membrane filtration method is used, transfer specified quantity of the sample solution through a membrane, rinse appropriately, add 50-100 cfu testing micro-organisms in the last portion of rinsing solution. Record the colony number by membrane filtration method.

(2) Microbial group Determine the number of micro-organisms added in the test.

(3) Product control Transfer a prescribed quantity of the product, determine the number of bacteria, fungi or yeasts in sample.

(4) Diluting solution control Diluting solution control should be carry out when the sample of preparation used dispersant, emulsification, neutralization, centrifugation and filtration etc. Use diluting solution instead of sample and add the testing micro-organisms to 50-100 cfu per ml, preparation test solution and determine the number of micro-organisms as described above for testing group.

Evaluation of results
In each of the 3 parallel tests, the microbial recovery is not less than 70% (average colony number of the diluting solution control/average colony number of the testing group× 100%). If the microbial recovery of the testing

group is not less than 70% [(average colony number of the testing group-average colony number of the product control)/average colony number of the microbial group × 100%], proceed the bacteria, fungi or yeasts count of the product to be examined as described above. If the microbial recovery in any of the tests is below 70%, eliminate the antimicrobial activities of the product by appropriate methods like culture media dilution, centrifugation, membrane filtration, or neutralization. The method needs re-validation.
The validation test is carried out in parallel with the bacteria, fungi, or yeasts count of the product to be examined.

Examination method
Examination method include plate count and membrane filtration method. Use validated plate count method or membrane filtration method to carry out the bacteria, fungi, or yeasts count of the product to be examined.
Dilute the homogenized solution to be test with pH 7.0 sterile solution of sodium chloride-peptone buffer solution to make serial dilutions of 1∶10, 1∶100, 1∶1000, etc.

1. Plate count method
Use two to three successive serial dilutions as the testing solution. Transfer 1 ml of the sample to a sterile Petri dish (90 mm in diameter), add 15-20 ml Nutrient agar medium, or Sodium rose bengal agar medium, or Yeast extracts peptone glucose agar medium (melted at not exceeding 45℃), mix well, and allow the contents to solidify at room temperature. Invert the Petri dish and incubate under appropriate conditions. For each dilution, use at least 2 Petri dishes for each culture medium.

Negative control Transfer 1 ml of the dilution to a sterile Petri dish, promptly add the culture medium, and allow the contents to solidify at room temperature. Invert the Petri dish and incubate under appropriate conditions. Use at least 2 Petri dishes for each culture medium. No evident growth of micro-organisms occurs in either of the Petri dish.

Incubation and counting Unless otherwise prescribed, incubate the bacteria for 48 hours, count the number of colonies every day, report the number on the 48 hour; incubate the fungi and yeasts for 72 hours, count the number of colonies every day, report the number on the 72 hour; extend the incubation time to 5-7 days if necessary. Do not count the number if colonies assemble. Following counting, calculate the number of colonies of each dilution of the product , report the result following the Microbial number report rule described below.
For liquid preparations containing honey and royal jelly, use Sodium rose bengal agar medium for fungi count and Yeast extracts peptone glucose agar medium for yeasts count. Sum the counts as the final result.

Microbial number report rule Select the dilution in which the average number of colonies of bacteria and yeasts is 30-300 cfu and of the fungi is 30-100 cfu.
If average microbial number of any dilution is less than 30, select the number of the lowest dilution. Calculate the number of cfu per g or per ml product to be tested.
When no microbial growth occurs in any of the dilutions, or it only occurs for the lowest dilution where the average microbial number of the cfu is less than 1, report the result with 1 multiplying by the lowest dilution folds.

2. Membrane filtration
Use membranes having a nominal pore size not greater than 0.45 μm, and a diameter of appropriately 50 mm. The type of filter material is chosen in such a way that the bacteria retaining efficiency is not affected by the component or solvent of the sample to be investigated. The filter unit and membrane are sterilized prior to use by appropriate means. Maintain the performance characteristic of the filter during the testing process. Moist the membrane with a minimum amount of rinsing solution before the test of aqueous products. Where the product to be examined is an oil, the membrane and filter unit are thoroughly dried before use. Let the product solution and rinsing solution cover the whole membrane to obtain its maximal performance. Rinse the membrane with 100 ml of rinsing solution each time if necessary. Do not use a large amount of rinsing solutions to avoid disturbance of the micro-organisms on the membrane.
Take representively 1 g or 1 ml of the product, or 1 ml suitable dilution solution of the sample, which containing large numbers of micro-organism), and dilute to 100 ml with diluting solution, mix well and filter. Rinse the membrane with pH 7.0 sterile sodium chloride-peptone buffer solution or other suitable rinsing solution, as described above for validation test. Transfer the membrane onto a Nutrient agar medium or Sodium rose bengal agar medium, or Yeast extracts peptone glucose agar medium plate, and incubate. Use at least one membrane for each medium.

Negative control Use 1 ml of the dilution, and carry out the test as described above. No evident growth of micro-organisms occurs in the negative control.

Incubation and counting Carry out the test as described above for plate count method. The number of micro-organisms on each membrane is not more than 100.

Microbial number report rule Multiply the average microbial number by dilution folds as the number of cfu per g or per ml product to be test. If no microbial growth occurs, report the result with less than 1 or 1 multiplying by the lowest dilution folds.

Test for specified micro-organisms

Method validation.
The method for specified micro-organisms test is validated before it is used for microbial limit tests for drugs. The method is re-validated if changes in composition of the product or testing conditions may affect the result.

Validation micro-organisms used should be complied with requirements of the microbial limits of the product. Validation the method of coliform should be used Escherichia coli. Carry out the test as describe under the Test for specified micro-organisms exactly the same methods and the following instructions.

Test strains he strains comply with the requirements as described above for bacteria, fungi, or yeasts count.

Escherichia coli	[CMCC (B) 44102]
Staphylococcus aureus	[CMCC (B) 26003]
Salmonella paratyphi B	[CMCC (B) 50094]
Pseudomonas aeruginosa	[CMCC (B) 10104]
Clostridium sporogenes	[CMCC (B) 64941]

Preparation of Inoculum Inoculate freshly cultured of *Escherichia coli*, *Staphylococcus aureus*, *Salmonella paratyphi B*, or *Pseudomonas aeruginosa* to nutrient broth medium or nutrient agar medium; inoculate freshly cultured of *Clostridium sporogenes* to fluid thioglycollate medium; incubate for 18-24 hours. Dilute the suspension to 10-100 cfu per ml with sterile solution of 0.9% sodium chloride.

Validation test

(1) Testing group Add a specified quantity of the product to be examined and 10-100 cfu testing micro-organisms to the culture medium, carry out the test by prescribed methods described below. When the membrane filtration method is used, filter an appropriate quantity of the product through a membrane, rinse appropriately, add the testing micro-organisms in the last portion of rinsing solution. Transfer the membrane to the culture medium for incubation.

(2) Negative control Negative control is set to verify the specificity of the testing method. The procedure is the same as described above for testing group. Use *Staphylococcus aureus* as the negative control microorganism for the test of *Escherichia coli*, coliform, or *Salmonella* species. Use *Escherichia coli* as the negative control microorganism for the test of *Pseudomonas aeruginosa*, *Staphylococcus aureus*, and *Clostridium* species. No control micro-organism is detected.

Evaluation of results

No control micro-organism is detected in the negative control. If the tested micro-organism is detected in the testing group, proceed the test with the product to be examined. If the tested micro-organism is not detected in the testing group, eliminate the antimicrobial activities of the product by appropriate methods like culture media dilution, centrifugation, membrane filtration, or neutralization. The method needs re-validation.

The validation test is carried out in parallel with the test for specified micro-organisms of the product to be examined.

Examination method

Carry out the test of the product to be examined as described above for validation test.

Positive control Add 10-100 cfu of the tested micro-organism to the positive control, carry out the test as the Test for specified micro-organisms. The tested micro-organism can be detected in the positive control.

Negative control Transfer 10 ml of diluting solution to a prescribed amount of culture media, and incubate as the Test for specified micro-organisms. No micro-organism growth occurs in the negative control.

(1) *Escherichia coli* Inoculate 10 ml of the test solution (equivalent to 1 g, 1 ml or 10 cm^2) to be examined to an appropriate amount of Bile salt lactose culture medium (not less than 100 ml) directly or after appropriate treatment, incubate for 18-24 hours (48 hours if necessary).

Inoculate 0.2 ml of the above culture to a tube containing 5 ml MUG medium, and incubate. Observe under 366 nm UV light at the time of 5 hours and 24 hours, respectively. Use blank MUG medium as the negative control. The result is MUG-positive if the cultures give fluorescent light, or MUG negative if no fluorescent light is observed. Following observation, add several drops of indole test solution. The result is indole-positive if the liquid surface presents a rosy colour, or indole-negative if no colour change takes place. The negative control is MUG-negative and indole-negative.

A MUG-positive and indole-positive result indicates the presence of *E. coli* in the product. A MUG-Negative and indole-Negative result indicates the absence of *E. coli* in the product. If the product is MUG-positive and indole-negative, or MUG-negative and indole-positive, inoculate the cultures on eosin methylene blue agar medium plate or MacConkey agar medium plate, and incubate for 18-24 hours.

If no growth of micro-organism occurs on the plate, or the appearance of the microbial colonies does not match the descriptions in Table 1, the product passes the test. Otherwise, confirm the result by suitable biochemical tests.

Table 1 Morphologic characteristics of Escherichia coli colonies

Culture medium	Characteristic colonial morphology
Eosin methylene blue agar medium	Purple black, light purple, bluish purple or pink, deep purple at the center of colony or no obvious dark center, circular, slight convex, regular margin, smooth surface, moist, metal gloss often appeared.
MacConkey agar medium	Brilliant pink or pale red, deep pink at center of the colony, circular, flat, regular margin, smooth surface, moist.

(2) Coliform Use 3 tubes each containing an appropriate amount of Bile salt lactose fermentation culture medium (not less than 10 ml), respectively add 1 ml of 1∶10 (containing 0.1 g or 0.1 ml of the product), 1∶100 (containing 0.01 g or 0.01 ml of the product), 1∶1000 (containing 0.001 g or 0.001 ml of the product) dilutions. Add 1 ml of diluting solution to another tube as the negative control. Incubate for 18-24 hours.

The product passes the test if no microbial growth occurs, or no gas bubbles or acid forms. If the formation of acid and gas bubbles is observed, inoculate the cultures on Eosin methylene blue agar medium plate or MacConkey agar medium plate, and incubate for 18-24 hours.

If no growth of micro-organisms occurs on the plate, or the appearance of the microbial colonies does not match the descriptions in Table 2, or the colonies are not gram-negative bacilli, the product passes the test. If the morphology of the colonies matches the descriptions in Table 2, and they are gram-negative bacilli without spores, confirm the result by suitable biochemical tests.

Table 2 Morphologic characteristics of coliform colonies.

Culture medium	Characteristic colonial morphology
Eosin methylene blue agar medium	Purple black, or purple red, circular, slight convex, regular margin, smooth surface, moist.
MacConkey agar medium	Brilliant pink or pale red, circular, flat, regular margin, smooth surface, moist.

Validation test Choose 4-5 suspect colonies from the plate, individually inoculate in tubes containing bile salt lactose culture medium, and incubate for 24-48 hours. The formation of acid and gas bubbles indicates the presence of coliform. Otherwise, absence coliform in the product.

According to the number of coliform-positive tubes, and Table 3, record the probable number of coliform 1 g or 1 ml of the product.

Table 3 Probable number of coliform.

Result of each quantity of product			Probable number of coliform N(per g or ml)
0.1 g or 0.1 ml	0.01 g or 0.01 ml	0.001 g or 0.001 ml	
+	+	+	$N>10^3$
+	+	−	$10^2<N<10^3$
+	−	−	$10<N<10^2$
−	−	−	$N<10$

Note: + represents coliform is detected, and-not detected.

(3) *Salmonella species* Inoculate 10 g or 10 ml of the product to be examined to an appropriate amount (not less than 200 ml) of Nutrient broth culture medium directly or after appropriate treatment, mix well with a homogenizer or other devices, and incubate for 18-24 hours.

Inoculate 1 ml of the culture above to 10 ml Sodium tetrathionate brilliant green culture medium, incubate for 18-24 hours. Then streak the cultures on the surface of Bile salt sulfur milk agar culture medium (or Salmonella and Shigella agar medium) and MacConkey agar medium (or Eosin methylene blue agar) plates separately, incubate for 18-24

hours (or 40-48 hours if necessary). If no bacterial growth occurs on the plate, or the morphology of the colonies does not conform to the descriptions in Table 4, *Salmonella* is absence in the product to be tested.
If the morphology of the colonies conforms to or is similar to the description in Table 4, choose 2-3 colonies and transfer to Triple sugar iron agar culture medium slant with a inoculating needle, using surface and deep inoculation. Incubate for 18-24 hours. If red colour on the surface and yellow colour at the bottom, or yellow on the surface and black at the bottom is not observed, *Salmonella* is absence in the product to be tested. Otherwise, confirm the presence of *Salmonella* by carrying out suitable biochemical and Serum agglutination tests with the cultures on triple sugar iron agar culture medium slant.

Table 4 Morphologic characteristics of Salmonella colonies.

Culture medium	Characteristic colonial morphology
Bile salt sulfur lactose agar	Colourless to pale orange, semitransparent, black at the center or whole black or no black
Salmonella and *Shigella* agar medium	Colourless to pale red, semitransparent or opaque, black brown in the center of the colonies occasionally
Eosin methylene blue agar medium	Colourless to pale orange colour, transparent or semitransparent, smooth moist circular colonies
MacConkey agar medium	Colourless to pale orange colour, transparent or semitransparent, dark in the center occasionally

(4) *Pseudomonas aeruginosa* Inoculate 10 ml of the test solution (equivalent to 1 g, 1 ml or 10 cm^2 of the product) to an appropriate amount (not less than 100 ml) of Bile salt lactose culture medium, incubate for 18-24 hours. Then streak the cultures on the surface of Cetyl trimethylammonium bromide agar culture plate, and incubate for 18-24 hours. *Pseudomonas aeruginosa* colonies are typically flat, irregular, diffusing margin, moist surface, greyish white, occasionally surrounded by bluish green zone. If no bacterial growth occurs on the plate, or the morphology of the colonies does not conform to the above descriptions, *Pseudomonas aeruginosa* is absence in the product to be tested. If the growth colonies reveal the above characters, choose 2-3 colonies, inoculate separately on Nutrient agar culture slant, incubate for 18-24 hours. Use the slant cultures for Gram's staining, microscopical examination, and oxidase test.

Oxidase test Place a piece of clean filter paper in a Petri dish, spread the slant cultures on the filter paper with a sterile glass bar, add dropwise freshly prepared 1% *N*, *N*-dimethyl-*p*-phenylenediamine dihydrochloride test solution. The oxidase test is positive if the cultures appear pink and then turn into purplish red within 30 seconds. Otherwise, the test is negative.
If the slant cultures are not Gram-negative bacilli, or the oxidase test is negative, *Pseudomonas aeruginosa* is absence in the product to be tested. Otherwise, carry out the pyocyanin test.

Pyocyanin test Inoculate the slant cultures onto PDP agar culture slant, and incubate for 24 hours. Then add 3-5 ml of chloroform to the test tube, agitate the medium and shake thoroughly. Allow to stand for a while, then transfer the chloroform layer to a new tube, add about 1 ml of 1 mol/L hydrochloric acid solution, allow to stand for a moment following shaking, observe the phenomenon. If the solution appears pink, the pyocyanin test is positive; or otherwise, negative. Use un-inoculated PDP agar culture slant as the negative control. The negative control is pyocyanin-negative.
If the bacteria in question are Gram-negative bacilli, and are oxidase test positive and pyocyanin test positive, *Pseudomonas aeruginosa* is presence in the product to be examined. If the bacteria in question are Gram-negative bacilli, and are oxidase test positive and pyocyanin test negative, proceed the test by carrying out suitable biochemical tests to confirm whether they are *Pseudomonas aeruginosa*.

(5) *Staphylococcus aureus* Inoculate 10 ml of the test solution (equivalent to 1 g, 1 ml or 10 cm^2 of the product) to an appropriate amount (not less than 100 ml) of Sodium tellurite broth culture medium (or Nutrient broth culture medium) directly or after appropriate treatment, incubate for 18-24 hours (48 hours if necessary). Then streak the cultures on the surface of Egg yolk high salt agar culture medium plate or Mannitol high salt agar culture medium plate, incubate for 24-72 hours. If no bacterial growth occurs on the plate, or the morphology of the colonies does not conform to the descriptions in Table 5, *Staphylococcus aureus* is absence in the product in question.

Table 5 Morphologic characteristics of Staphylococcus aureus colonies

Culture medium	Characteristic colonial morphology
Mannitol high salt agar culture medium	Golden yellow, circular convex, regular margin, yellow outer circle, colony diameter 0.7-1 mm.
Egg yolk high salt agar culture medium	Golden yellow, circular convex, regular margin, opaque outer circle due to lecithin degradation, colony diameter 1-2 mm.

If the morphology of the colonies conforms to or is similar to the description in Table 5, choose 2-3 colonies and inoculate onto Nutrient agar culture medium slant, and incubate for 18-24 hours. Take the obtained cultures for Gram's staining. And inoculate the cultures in Nutrient broth culture medium, and incubate for 18-24 hours, then carry out the coagulase test.

Coagulase test Use 3 sterile tubes, add 0.5 ml of (1 : 1) mixture of plasma and sterile water in each tube, then respectively add 0.5 ml of nutrient broth cultures of the suspect bacteria (or concentrated bacterial suspension prepared from the nutrient agar slant cultures), 0.5 ml of nutrient broth cultures of *Staphylococcus aureus* (or concentrated bacterial suspension prepared from the nutrient agar slant cultures), and 0.5 ml of Nutrient broth culture medium or 0.9% sterile sodium chloride solution, which are testing tube, positive tube, and negative tube, respectively. Incubate the 3 tubes together. Examine the tubes at 3 hours and subsequently at suitable intervals up to 24 hours. The plasma in the negative tube maintains fluidity, and the plasma coagulates in the positive tube. If the plasma in the testing tube coagulates, the coagulase test is positive, or otherwise, negative. If the result of positive or negative tube does not conform to the above description, repeat the test.
If the suspect bacteria are not Gram-positive cocci, and the coagulase test is negative, *Staphylococcus aureus* is absence in the product to be tested.

(6) *Clostridium* Take two equal portions (10 ml, equivalent to 1 g or 1 ml of the product) of the sample solution. Heat one portion at 80℃ for 10 minutes and cool rapidly. Do not heat the other portion. Inoculate the test solutions above to 100 ml of Chopped meat culture medium directly or after appropriate treatment separately. Incubate under anaerobic conditions for 72-96 hours. If no turbidity,

gas bubbles, beef digestion, or bad smells form in the testing tube, *Clostridium* is absent in the product being examined. Otherwise, spread 0.2 ml of the cultures onto the surface of columbia agar culture medium plate to which gentamicin has been added, and incubate under anaerobic conditions for 48-72 hours. If no microbial growth occurs on the plate, *Clostridium* is absent in the product to be tested. If colonies are observed on the plate, select 2-3 colonies and carry out Gram's staining test and catalase test.

Catalase test Put the colonies from the plate above onto clean glass slices, add dropwise 3% hydrogen peroxide solution. If gas bubbles appear on the colony surface, the catalase test is positive, or otherwise, negative.

If the suspect colonies are Gram-positive *Clostridium*, with or without oval or round spores, and catalase test is negative, *Clostridium* is presence in the product being examined. Or otherwise, *Clostridium* is absence.

Evaluation of results

If specified micro-organisms or other pathogenic micro-organisms are detected in one single test, the product does not pass the test. The test needs not repetition.

If any count of bacteria, of fungi, or of yeasts does not comply with the requirements, take samples at random from the same batch, and carry out two more independent repetitive tests. Report the average value from three determinations as the final result.

If fungi and yeasts are detected in eye preparations, the product being examined passes the test for fungi and yeasts count only if micro-organisms are not detected in two more repetitive tests.

If results of bacteria, fungi and yeasts count, as well as the test for specified micro-organisms meet the specified requirements for the product being examined, the product passes the test. If the result of bacteria, fungi and yeasts count, or the result for the test for specified micro-organisms does not comply with the specified requirements for the product being examined, the product does not pass the test.

Diluting solutions

The diluting solutions are sterilized by validated sterilization methods after preparation.

1. pH 7.0 sterile sodium chloride-peptone buffer solution

Prepare the solution as described under the Test for Sterility (Append XIII B)

2. pH 6.8 sterile phosphate buffer solution, pH 7.6 sterile phosphate buffer solution

Prepare the solution as described under Appendix XV D, filter, dispense in containers, and sterilize.

If necessary, add surfactants or neutralizing solutions before or after the sterilization.

3. 0.9% sterile sodium chloride solution

Transter 9.0 g sodium chloride, dissolve in 1000 ml water, filter, dispense in containers, and sterilize.

Culture media

The media may be prepared as described below, or their dehydrated formulations may be used. The media should be Sterilized using a validated process.

1. Nutrient agar culture medium, nutrient broth culture medium, fluid thioglycollate medium, modified Martin medium, and modified Martin agar medium

Prepare the media as described under the Test for Sterility (Appendix XIII B).

2. Sodium rose bengal agar medium

Peptone	5.0 g
Glucose	10.0 g
Potassium dihydrogen phosphate (KH_2PO_4)	1.0 g
Magnessium sulfate ($MgSO_4 \cdot 7H_2O$)	0.5 g
Sodium tetrachloro-tetraiodo-fluorescein	0.0133 g
Agar	14.0 g
water	1000 ml

Mix the above ingredients in water except glucose and sodium tetrachloro-tetraiodo-fluorescein, heat until dissoved, filter, and then add glucose and sodium tetrachloro-tetraiodo-fluorescein, Dispense in containers and sterilize.

3. Yeast extracts peptone glucose agar medium (YPD)

peptone	10.0 g
Yeast extracts	5.0 g
Glucose	20.0 g
agar	14.0 g
water	1000 ml

Mix the above ingredients in water except glucose, heat until dissolved, filter, and then add glucose, Dispense in containers and sterilize.

4. Bile salts lactose medium (BL)

peptone	20.0 g
lactose	5.0 g
Sodium chloride	5.0 g
Dipotassium hydrogen phosphate (K_2HPO_4)	4.0 g
Potassium dihydrogen phosphate (KH_2PO_4)	1.3 g
Ox bile salts (or sodium desoxycholate 0.5 g)	2.0 g
water	1000 ml

Mix the above ingredients in water except lactose and ox bile salts (or sodium desoxycholate), heat until dissolved, adjust the pH so that after sterilization it is 7.4 ± 0.2, boiling. Filter, add lactose and ox bile salts (or sodium desoxycholate), dispense in containers and sterilize.

5. Bile salts lactose fermentation medium

Add 0.04% bromocresol purple indicator to the un-sterilized bile salts lactose medium, dispense in suitable tubes containing inverted tubule, and sterilize.

6. Eosin methylene blue agar medium (EMB)

Nutrient agar medium	100 ml
2% eosin solution	2 ml
20% lactose solution	5 ml
0.5% methylene blue solution	1.3-1.6 ml

Melt the nutrient agar medium by heating, cool to 60℃, add aseptically the other three solutions, shake thoroughly, and pour into Petri dishes.

7. MacConkey agar medium (MacC)

Peptone	20.0 g
Sodium chloride	5.0 g
lactose	10.0 g
1% neutral red solution	3.0 ml
Ox bile salts	5.0 g
Agar	14.0 g
water	1000 ml

Mix peptone and sodium chloride in water, heat until dissoved, adjust the pH so that after sterilization it is 7.2 ± 0.2. Add agar, heat to melt, then add the other ingredients. Shake thoroughly, dispense in containers, and sterilize. Cool to 60℃, and pour into the Petri dishes.

8. 4-methylumbelliferyl-β-D-glucuronide (MUG) culture medium

peptone	10.0 g
Manganese sulfate	0.5 mg
Zinc sulfate	0.5 mg
Magnesium sulfate	0.1 g
Sodium chloride	5.0 g
Calcium chloride	50 mg
Potassium dihydrogen phosphate (anhydrous)	0.9 g
Disodium hydrogen phosphate (anhydrous)	6.2 g
Sodium sulfite	40 mg

Sodium desoxycholate	1.0 g
MUG	75 mg
water	1000 ml

Mix the above ingredients in water except MUG, heat until dissolved, adjust the pH so that after sterilization it is 7.3±0.1, add MUG, dissolve, dispense 5 ml of the medium to each tube and sterilize.

9. Triple sugar iron agar medium (TSI)

Peptone	20.0 g
glucose	1.0 g
Beef extract powder	5.0 g
Sodium chloride	5.0 g
lactose	10.0 g
sucrose	10.0 g
Ferrous sulfate	0.2 g
Sodium thiosulfate	0.2 g
0.2% phenosulfonphthalein solution	12.5 ml
agar	12.0 g
water	1000 ml

Mix peptone, beef extracts powder, sodium chloride, ferrous sulfate and sodium thiosulfate, dissolve in water heat until dissolved, adjust the pH so that after sterilization it is 7.3±0.1. Add agar, heat to melt, then add the other ingredients. Shake thoroughly, dispense in containers, and sterilize. Make short slants (2-3 cm) after the media cool.

10. Sodium tetrathionate brilliant green medium (TTB)

Peptone	5.0 g
Calcium carbonate	10.0 g
Ox bile salts	1.0 g
Sodium thiosulfate	30.0 g
water	1000 ml

Dissolve the above ingredients in water heat until dissolved, and sterilize.

Just prior to use, add 0.2 ml iodine test solution and 0.1 ml brilliant green test solution to 10 ml of the medium, and shake thoroughly.

11. Salmonella and Shigella agar culture medium (SS)

peptone	5.0 g
Sodium citrate	8.5 g
0.1% Brilliant green solution	0.33 ml
Beef extract powder	5.0 g
Ammonium ferrous citrate	1.0 g
lactose	10.0 g
Sodium thiosulfate	8.5 g
Ox bile salts	8.5 g
1% neutral red solution	2.5 ml
agar	16.0 g
water	1000 ml

Mix the above ingredients in water except lactose, neutral red solution and agar, heat until dissolved, adjust the pH so that after sterilization it is 7.2±0.1. Filter, add agar and heat to melt. Then add the other ingredients, shake thoroughly, sterilize, cool to 60℃, and pour into Petri dishes.

12. Bile salts sulfur lactose agar culture medium (DHL)

peptone	20.0 g
Beef extracts	3.0 g
lactose	10.0 g
sucrose	10.0 g
Sodium desoxycholate	1.0 g
Sodium thiosulfate	2.3 g
Sodium citrate	1.0 g
Ammonium ferrous citrate	1.0 g
1% neutral red solution	3 ml
agar	16.0 g
water	1000 ml

Mix the above ingredients in water except sugars, indicators and agar, heat until dissolved, adjust the pH so that after sterilization it is 7.2±0.1. Add agar and heat to melt. Then add the other ingredients, shake thoroughly, sterilize, cool to 60℃, and pour into Petri dishes.

13. Cetrimide agar medium

peptone	10.0 g
Beef extracts powder	3.0 g
Sodium chloride	5.0 g
Cetyl trimethyl ammonium bromide	0.3 g
agar	14.0 g
water	1000 ml

Mix the above ingredients in water except agar, heat until dissolved, adjust the pH so that after sterilization it is 7.2±0.1. Add agar and heat it to melt, shake thoroughly. Dispense in containers, sterilize, cool to 60℃, and pour into Petri dishes.

14. Tellurite broth medium

Just prior to use, add 0.2 ml of freshly prepared 1% sodium (or potassium) tellurite solution, mix well.

15. Egg yolk high salts agar medium

peptone	6.0 g
Beef extracts	1.8 g
Sodium chloride	30.0 g
10% sodium chloride egg yolk solution	100 ml
agar	16.0-18.0 g
water	650 ml

Mix the above ingredients in water except 10% sodium chloride egg yolk solution, heat until dissolved, adjust the pH so that after sterilization it is 7.6±0.1. Sterilize and cool to 60℃. Add aseptically 10% sodium chloride egg yolk solution, shake thoroughly, and pour into Petri dishes.

16. Mannitol high salts agar medium

peptone	10.0 g
Beef extracts	1.0 g
mannitol	10.0 g
Sodium chloride	75.0 g
1% phenolsulfonphthalein solution	2.5 ml
agar	14.0 g
water	1000 ml

Mix the above ingredients in water except mannitol, phenolsulfonphthalein solution and agar, heat until dissolved, adjust the pH so that after sterilization it is 7.6±0.1, add agar and heat to melt. Filter and dispense in containers, sterilize and cool to 60℃, then pour into Petri dishes.

17. Lactose fermentation culture medium

peptone	20.0 g
Lactose	10.0 g
0.04% bromocresol purple indicator	25 ml
water	1000 ml

Mix the above ingredients in water except 0.04% bromocresol purple indicator, heat until dissolved, adjust the pH so that after sterilization it is 7.2±0.2, add the indicator, dispense in suitable tubes (3 ml per tube). Sterilize.

18. Pyocyanin culture medium

peptone	20.0 g
Magnesium chloride (anhydrous)	1.4 g
Potassium sulfate (anhydrous)	10.0 g
glycerol	10 ml
agar	14.0 g
water	1000 ml

Mix peptone, magnesium chloride and potassium sulfate, heat until dissolved, adjust the pH so that after sterilization it is 7.3±0.1, add glycerol and agar, heat to melt, shake thoroughly, dispense in suitable tubes and sterilize. Cool at room temperature to make slants.

19. Chopped meat culture medium

Preparation of the Beef bits. Use fresh beef, remove the fats and muscles, and boil for 10 minutes. Cut into pieces of 5 mm^3, add three folds (w/w) of distilled water, immerse in 4-10℃ water for 18-20 hours, then boil for 1 hour, filter through gauze. The residue is washed twice with water. Then put the beef bits into an appropriate amount of sodium hydroxide solution so that the pH is around 8.4, agitate thoroughly. Immerse the beef overnight, and discard the upper water the next day, and wash 2-3 times with water. Spread the beef on a tray, sterilize, and dry at 80-100℃, remove the powders, put into bottles, and keep away from moisture.

Preparation of chopped meat culture medium. Put the beef bits in suitable containers, add an appropriate amount of Nutrient broth medium so that the beef bits constitute 1.5% of the volume, adjust the pH so that after sterilization it is 7.3±0.1, sterilize.

20. Columbia agar culture medium

Pancreatic digest of casein	10.0 g
Pepsin digest of beef	5.0 g
Pancreatic digest of heart	3.0 g
Yeast extracts powder	5.0 g
Corn flour	1.0 g
Sodium chloride	5.0 g
agar	15.0 g
water	1000 ml

Mix the above ingredients in water except agar, heat until dissolved, adjust the pH so that after sterilization it is 7.3±0.2, add agar and heat to melt. Filter, dispense in containers and sterilize. Cool to 45-50℃, add sterile gentamicin sulfate (equivalent to 20 mg gentamicin), mix well, and pour into Petri dishes.

Microbial contamination limits of Pharmaceutical Preparations

The microbial contamination limits of non-sterile preparations is drawn by fully considering the drug administration routes, potential harm to the patients, and the special characteristics of Chinese meteria medica. Unless otherwise prescribed, Microbial limit test follows the criterion below in the manufacturing, storage and distribution of preparations, as well as in the establishment of new preparations standards, evaluation of imported preparations, and the quality control of preparations, extracts, and excipients.

1. Sterile preparations specified in General Notice or monographs, and other preparations labelled sterile

Comply with the test for Sterility.

2. Preparations for oral administration

2.1 Preparations not containing crude drugs

Bacteria count Not more than 1000 cfu per g, or 100 per ml.

Fungi and yeasts count Not more than 100 cfu per g or per ml.

E. coli. Absence in 1 g or 1 ml.

2.2 Preparations containing crude drugs

Bacteria count Not more than 10000 cfu per g (not more than 30000 per g for pills). Not more than 500 cfu per ml.

Fungi and yeasts count Not more than 100 cfu per g or per ml.

E. coli count Absence in 1 g or 1 ml.

Coliform count Less than 100 cfu per g, and less than 10 cfu per ml.

2.3 Preparations containing crude drugs with fermentation ingredients

Bacteria count Less than 100000 cfu per g. and less than 1000 cfu per ml.

Fungi and yeasts count Not more than 500 cfu per g, and not more than 100 cfu per ml.

E. col. Absence in 1 g or 1 ml.

Coliform count Less than 100 cfu per g, and less than 10 cfu per ml.

3. Preparations for local administration

3.1 Local administration preparations for surgery, burn or serious injury

Comply with the test for sterility.

3.2 Local administration preparations containing crude drugs used for incomplete skin or mucosa

Bacteria count Not more than 1000 cfu per g or per 10 cm^2, and not more than 100 cfu per ml.

Fungi and yeasts count Not more than 100 cfu per g, per ml or per 10 cm^2.

Staphylococcus aureus and *Pseudomonas aeruginosa* Absence in 1 g, 1 ml or 10 cm^2.

3.3 Local administration preparations containing crude drugs used for complete skin or mucosa

Bacteria count Not more than 10000 cfu per g or per 10 cm^2.

Fungi and yeasts count Not more than 100 cfu per g, per ml or per 10 cm^2.

Staphylococcus aureus and *Pseudomonas aeruginosa* Absence in 1 g, 1 ml or 10 cm^2.

3.4 Preparations for eye use

Bacteria count Not more than 10 cfu per g or per ml.

Fungi and yeasts count Absence in 1 g or 1 ml.

Staphylococcus aureus, *Pseudomonas aeruginosa* and *Escherichia coli* Absence in 1 g or 1 ml.

3.5 Preparations administered via ear, nose or respiratory tract

Bacteria count Not more than 100 cfu per g, per ml or per 10 cm^2.

Fungi and yeasts count Not more than 10 cfu per g, per ml or per 10 cm^2.

Staphylococcus aureus and *Pseudomonas aeruginosa* Absence in 1 g, 1 ml or 10 cm^2.

Escherichia coli. Absence in 1 g, 1 ml or 10 cm^2 for preparations for nose and respiratory tract administration.

3.6 Preparations for vagina and urethra use

Bacteria count Not more than 100 cfu per g or per ml.

Fungi and yeasts count Less than 10 cfu per g or per ml.

Staphylococcus aureus, *Pseudomonas aeruginosa* and *Clostridium* Absence in 1 g or 1 ml.

3.7 Preparations for rectal administration

Bacteria count Not more than 1000 cfu per g, and not more than 100 cfu per ml.

Fungi and yeasts count Not more than 100 cfu per g or per ml.

Staphylococcus aureus, *Pseudomonas aeruginosa* and *Escherichia coli* Absence in 1 g or 1 ml.

3.8 Other preparations for local administration

Bacteria count Not more than 100 cfu per g, per ml or per 10 cm^2.

Fungi and yeasts count Not more than 100 cfu per g, per ml or per 10 cm^2.

Staphylococcus aureus and *Pseudomonas aeruginosa* Absence in 1 g, 1 ml or 10 cm^2.

4. Oral preparations containing animal tissues (including extracts) and crude drugs of animal origin (except honey, royal jelly, cornu and Colla Corii Asini)

Salmonella species are absence per 10 g or per 10 ml.

5. Preparations for more than one administration routes

Comply with the requirements for each administration route.

6. Extracts and excipients

Refer to the criterion for corresponding preparation.

XIII D Test for Bacterial Endotoxin

The test for bacterial endotoxins is used to detect or quantify endotoxins of gram-negative bacterial origin using TAL regent. It is used to determine the limit concentration of bacterial endotoxin in a preparation being examined.

Two method are used for this test: the gel-clot method and the photometric method. The latter includes a turbidimetric method and a chromogenic method. Proceed by any one of these two methods. In the event of doubt or dispute, the final decision is made based on the gel-clot method, unless otherwise indicated in the monograph.

The quantities of endotoxin are expressed in Endotoxin Units (EU).

The National Standard for Endotoxin (NSE) is prepared and purified from Escherichia coli. It is used only for calibration of the working standard for endotoxin (WSE) and for calibration and verifying the sensitivity of TAL reagents.

The working standard for endotoxin (WSE) of which the potency has been standardized against NSE in collaboration assay, is used for bacterial endotoxin test as positive control, for interference test and for sensitivity test of TAL reagent.

The water used in the gel-clot test for bacterial endotoxins is a sterile water for injection, of which quantities of bacterial endotoxins are less than 0.015 EU per ml. The quantities of bacterial endotoxins of water used in the photometric test are less than 0.005 EU per ml.

Depyrogenate all glassware and other heat-stable apparatus used in the test by heating in a hot-air oven at 250℃ for at least 60 minutes (or by any other validated suitable method) to eliminate extraneous endotoxin that may present. If employing plastic apparatus, such as microtitre plates and pipette tips for automatic pipetters, use apparatus shown to be free of detectable endotoxin and of interfering effects for the test. Avoid microbial contamination during the test.

Preparation of the test solutions Prepare the test solutions by dissolving or diluting active substances or medicinal products using water for bacterial endotoxins test (water for BET). Some substances or preparations may be more appropriately dissolved or diluted in other aqueous solutions. If necessary, adjust the pH of the test solution (or dilution thereof) so that the pH of the mixture of the TAL reagents and test solution falls within the pH range specified by the TAL reagents manufacturer. This usually applies to a product with a pH in the range of 6.0 to 8.0. The pH may be adjusted by the use of acid, base or a suitable buffer, as recommended by the TAL reagents manufacturer. Acids and bases may be prepared from concentrates or solids with water for BET in containers free of detectable endotoxin. Buffers must be validated to be free of detectable endotoxin and interfering factors.

Establishment of endotoxin limits The endotoxin limit (L) for drugs or biological products is usually defined as follows:

$$L=K/M$$

Where L is the endotoxin limit for active substances administered parenterally, which is specified in units such as EU/ml, EU/mg, or EU/Unit of biological activity;

K is the threshold human pyrogenic dose of endotoxin per kg of body weight in a single hour period, which is expressed as EU/(kg • h). For injections, K = 5 EU/(kg • h); for injections of radiopharmaceuticals, K = 2.5EU/(kg • h); and for intrathecal injections, K=0.2 EU/(kg • h);

M is equal to the maximum recommended human dose of product per kg of body weight in a single hour period, which is specified in units such as ml/(kg • h), mg/(kg • h), or U/(kg • h). Here the human average body weight is 60 kg; the injection period is calculated as 1 hour when the injection is completed within 1 hour.

The endotoxin limit calculated by human dose may be adjusted according to the situation of manufacture and clinical use if necessary. In that case, appropriate reasons for adjustment have to be submitted.

Determination of the Maximum Valid Dilution (MVD) The Maximum Valid Dilution (MVD) is the maximum allowable dilution of the substance being examined at which the endotoxin limit can be determined. Determine the MVD using the following formulae:

$$MVD=cL/\lambda$$

Where L is the endotoxin limit of the substance being examined;

c is the concentration of the substance being examined, when L is expressed as EU/ml, c is 1.0ml /ml; when L is expressed as EU/mg or EU/U, the unit of C is mg /ml or U/ml. Minimum valid dilution concentration, $c=\lambda/L$, may be calculated for drug substance or sterilized powders for injection when MVD is 1;

λ is the labelled sensitivity of TAL reagent in the gel-clot method (EU/ml) or the lowest point used in the standard curve of the turbidimetric or chromogenic method.

Gel-clot method (Method 1)

The gel-clot method detects or qualifies endotoxins based on clotting of the TAL reagent in the presence of endotoxins.

Test for confirmation of labelled TAL reagent sensitivity The labelled sensitivity of TAL reagent (EU/ml) is defined as the lowest concentration of endotoxin that is required to cause the TAL reagent to clot under the conditions specified in the following procedure. The test for confirmation of the labelled TAL reagent sensitivity is to be carried out when each new batch of TAL reagent is used or when there is any change in the experimental conditions which may affect the outcome of the test.

Dissolve NSE or CSE in water for BET according to the labelled sensitivity of TAL reagent (λ), mix for 15 minutes using a vortex mixer. Prepare four replicate series of two-fold dilutions of NSE or CSE using water for BET to produce 4 dilutions with concentration of 2.0 λ, 1.0 λ, 0.5 λ, 0.25 λ, mix each dilution for 30 seconds using a mixer. Use 18 tubes of 10 mm× 75 mm in size containing of 0.1 ml of TAL reagent or use 18 original ampoules of 0.1 ml of TAL reagent. Add 0.1 ml of each of 16 endotoxin standard solutions (four standard concentrations in quadruplicate) to each of 16 tubes, and 0.1 ml of water for BET to each of 2 tubes as negative control. Mix gently after each addition, cover the tubes tightly and incubate the tubes vertically at 37±1℃ for 60±2 minutes.

Take each tube in turn directly from the incubator and invert it through about 180° in one smooth motion to test the integrity of the gel. If a firm gel has formed that remains in place upon inversion, record the result as positive. A result is negative if an intact gel is not formed. Handle the tubes with care to avoid vibration, or false negative may result.

The test is not valid unless all the four tubes of highest concentration (2.0 λ) give positive results, all the four tubes of lowest concentration (0.25 λ) give negative results and the two tubes of negative control give negative results.

Calculate the geometric mean endpoint concentration, i. e. the measured sensitivity of the TAL reagent (λ_c), using the following expression:

$$\lambda_c = \lg^{-1} (\sum X/4)$$

Where X is the log endpoint concentration which is the last positive result in a series of decreasing concentrations of endotoxin.

If this λ_c is not less than 0.5 λ and not more than 2 λ, the labelled sensitivity (λ) is confirmed and is used in tests performed with this TAL reagent.

Test for interfering factors Prepare solutions A, B, C and D as shown in Table 1, and use the test solutions at a dilution less than the MVD, not containing any detectable endotoxins, operating as described under the *Test for confirmation of labelled TAL reagent sensitivity*.

The test is not valid unless all replicates of solutions A and D show no reaction and the result of solution C confirms the labelled TAL reagent sensitivity. The geometric mean endopoint concentrations of solutions B (E_t) and C (E_s) are determined using the following formulas.

$$E_s = \lg^{-1} (\sum X_s/4)$$
$$E_t = \lg^{-1} (\sum X_t/4)$$

Where X_s is the log endpoint concentration of the solution C. X_t is log endpoint concentration of the solution B.

If both E_s and E_t are not less than 0.5 λ and not more than 2 λ, the test solution does not contain interfering factors under the experimental conditions used. Otherwise, the solution interferes with the test. If the preparation being examined interferes with the test at a dilution less than the MVD, repeat the test for interfering factors using a greater dilution, not exceeding the MVD. The use of a more sensitive TAL regent permits a greater dilution of the preparation being examined and this may contribute to the elimination of interference.

Table 1 Preparation of solutions in the test for interfering factors by using gel-clot method

Solution	Endotoxin Concentration/Solution to which endotoxin is added	Diluent	Dilution factor	Initial endotoxin concentration	Number of replicates
A	None/Test solution	—	—	—	2
B	2 λ/Test solution	Test	1	2 λ	4
		solution	2	1 λ	4
			4	0.5 λ	4
			8	0.25 λ	4
C	2 λ/Water for BET	Water for	1	2 λ	4
		BET	2	1 λ	4
			4	0.5 λ	4
			8	0.25 λ	4
D	None/Water for BET	—	—	—	2

Solution A: solution of the preparation being examined that is free of detectable endotoxins.
Solution B: test for interference.
Solution C: control of the labelled TAL reagent sensitivity.
Solution D: negative contorl (water for BET).

Interference may be overcome by suitable treatment, such as filtration, neutralization, dialysis or heat treatment. To establish that the treatment chosen effectively eliminates interference without loss of endotoxins, repeat the test for interfering factors using the preparation being examined to which the standard endotoxin has been added and which has then been submitted to the chosen treatment.

When establish a method of bacterial endotoxin test for a new drug, the test for interfering factors should be carried out.

When the souce of the TAL reagent, or the formula or the manufacture process of the substance being examined are changed, or there is any change in the experimental conditions which may affect the outcome of the test, the test for interfering factors should be performed again.

Procedure

(1) Gel-clot limit test

Prepare solutions A, B, C and D as shown in Table 2, and perform the test following the procedure in the *Test for confirmation of labelled TAL reagent sensitivity*.

Table 2 Preparation of solutions in gel-clot limit test

Solution	Endotoxin Concentration/Solution to which endotoxin is added	Number of replicates
A	None/Diluted test solution	2
B	2 λ/Diluted test solution	2
C	2 λ/Water for BET	2
D	None/Water for BET	2

Solution A: solution of the preparation being examined
Solution B: positive product control
Solution C: positive control
Solution D: negative control

Prepare solution A and solution B (positive product control) using a test solution at the dilution of the MVD, with which *the Test for interfering factors* was completed.

Invaluation of results The test is not valid unless both replicates of the two positive control solutions B and C are positive and those of negative control solution D are negative.

The preparation being examined complies with the test when a negative result is found for both replicates of solution A.

The preparation being examined does not comply with the test when a positive result is found for both replicates of solution A. Repeat the test by 4 replicates of solution A when a positive result is found for one replicate of solution A and a negative result is found for the other. The preparation being examined complies with the test if a

negative result is found for all replicates of solution A in the repeat test.

(2) Gel-clot semi-quantitative test

The test quantifies bacterial endotoxins in the test solution by titration to an endpoint. Prepare solutions A, B, C and D as shown in Table 3, and perform the test following the procedure in the *Test for confirmation of labelled TAL reagent sensitivity*.

Table 3 Preparation of solutions in the gel-clot semi-quantitative test

Solution	Endotoxin Concentration/Solution to which endotoxin is added	Diluent	Dilution factor	Initial endotoxin concentration	Number of replicates
A	None/Test solution	Water for	1	—	2
		BET	2	—	2
			4	—	2
			8	—	2
B	2 λ/Test solution		1	2 λ	2
C	2 λ/Water for BET	Water for	1	2 λ	2
		BET	2	1 λ	2
			4	0.5 λ	2
			8	0.25 λ	2
D	None/Water for BET	—	—	—	2

Solution A: test solution at the dilution, not exceeding the MVD, with which the test for interference factors was carried out. Subsequent dilution of the test solution must not exceed the MVD. Use water for BET to make two dilution series of 1, 1/2, 1/4, and 1/8, relative to the dilution with which the test for interfering factors was carried out.
Solution B: solution A containing standard endotoxin at a concentration of 2 λ (positive product control).
Solution C: two series of water for BET containing the standard endotoxin at concentrations of 2 λ, λ, 0.5 λ, and 0.25 λ, repectively.
Solution D: negative control (water for BET).

Invaluation of results The test is not valid unless the following 3 conditions are met: (1) both replicates of solution D (negative control) are negative; (2) both replicates of solution B (positive product control) are positive; and (3) the geometric mean endpoint concentration of solution C is in the range of 0.5 λ to 2 λ.

To determine the endotoxin concentration of solution A, calculate the endpoint concentration for each replicate series of dilutions by multiplying each endpoint dilution factor by λ. The endotoxin concentration in the test solution is the geometric mean endpoint concentration of the replicates ($E=\lg^{-1}(\sum X/2)$). If the test is conducted with a diluted test solution, calculate the concentration of endotoxin in the original solution by multiplying the result by the dilution factor.

If none of the dilutions of the test solution is positive in a valid test, record the endotoxin concentration as less than λ (or, if a diluted sample was tested, as less than λ times the lowest dilution factor of the sample). If all dilutions are positive, the endotoxin concentration is recorded as equal to or greater than the greatest dilution factor multiplied by λ.

The preparation being examined meets the requirements of the test if the concentration of endotoxin is less than that specified in the individual monograph. Otherwise, the preparation being examined does not meet the requirements of the test.

Photometric method (Method 2)

The photometric method includes a turbidimetric method and a chromogenic method.

The turbidimetric method measures the endotoxin concentrations of test solutions based on the measurement of the increase in turbidity during the gel formation of the TAL reagent. Depending on the test principle used, this method is classified as being the endpoint-turbidimetric test or the kinetic-turbidimetric test. The endpoint-turbidimetric test is based on the quantitative relationship between the concentration of endotoxins and the turbidity (absorbance or transmission) of the reaction mixture at the end of an incubation period. The kinetic-turibidimetric test in a method to measure either the onset time needed for the reaction mixture to reach a predetermined absorbance, or the rate of turbidity development.

The chromogenic method measures the chromophore released from a suitable chromogenic peptide by the reaction of endotoxins with the TAL reagent. Depending on the test principle employed, this method is classified as being the endpoint-chromogenic test or the kinetic-chromogenic test. The endpoint-chromogenic test is based on the quantitative relationship between the concentration of endotoxins and the quantity of chromophore released at the end of an incubation period. The kinetic-chromogenic test is a method to measure either the onset time needed for the reaction mixture to reach a predetermined absorbance, or the rate of colour development.

All photometric tests are usually carried out by special instrumentation at the incubation temperature of 37±1℃.

The quantities and volume ratios of the substance being examined and the TAL reagent, incubation time etc. employed in the test are decided according to the related instructions of instruments and the TAL reagents.

To assure the precision or validity of the turbidimetric and chromogenic tests, preparatory tests are conducted to assure that the criteria for the standard curve are satisfied and that the test solution does not interfere with the test.

Assurance of criteria for the standard curve The test for assurance of criteria for the standard curve must be carried out when each new batch of TAL reagent is used or any changes are made to the experimental conditions that are likely to influence the result of the test.

Using the standard endotoxin solution, prepare at least three endotoxin concentrations (the dilution factor of adjacent concentrations is not greater than 10) to generate the standard curve within the range of endotoxin concentrations indicated by the TAL reagent manufacturer. The mixing time for every dilution is the same as that of gel-clot method. Perform the test using at least three replicates of each standard endotoxin solution, and duplicate of negative control solution at the same time. When both reaction times of the duplicate of negative control solution are greater than that of the lowest concentration, perform statistic analysis of linear regression for all the data.

The test is not valid unless the absolute value of the correlation coefficient, $|r|$, is greater than or equal to 0.980, otherwise repeat the test.

Test for interfering factors Select an endotoxin concentration (λ_m) at or near the middle of the endotoxin standard curve. Prepare solutions A, B, C and D as shown in Table 4.

Table 4 Preparation of solutions in the test for interfering factors by using photometric method

Solution	Endotoxin Concentration	Solution to which Endotoxin is Added	Number of Replicates
A	None	Test solution	not less than 2
B	Middle concentration(λ_m)of the standard curve	Test solution	not less than 2
C	At least 3 concentrations (lowest concentration, λ, is designated)	Water for BET	each not less than 2
D	None	Water for BET	not less than 2

Solution A: test solution, that may be diluted not to exceed the MVD.
Solution B: preparation to be examined at the same dilution as Solution A, containing added endotoxin at a concentration equal to or near the middle of the standard curve.
Solution C: standard endotoxin solution at the concentrations used in the validation of the method described in *Assurance of criteria for the standard curve*.
Solution D: water for (negative control) BET.

Calculate the content of endotoxin contained in the solution A (C_t) and solution B (C_s) respectively, and calculate the recovery of the endotoxin added to solution B as followes:

$$R=[(C_s-C_t)/\lambda_m]\times 100\%$$

If under the conditions of the test, the recovery of the endotoxin added to solution B is within 50% to 200%, the test solution is considered to be free of interfering factors.
When the endotoxin recovery is out of the specified ranges, the interfering factors must be removed as described in the *Test for interfering factors* under *Gel-Clot Techniques*. The efficiency of the treatment is verified by repeating the test for interfering factors.
When the souce of the TAL reagent, or the origin, formula and the manufacture process of the substance being examined are changed, or there is any change in the experimental conditions which may affect the outcome of the test, the *Test for interfering factors* should be performed again.

Procedure
Follow the procedure described in the *Test for interfering factors* under *Photometric method*.
Calculate the endotoxin concentration of each replicate of solution A using the standard curve generated by the series of positive controls, solution C.
The test is not valid unless the following 3 requirements are met:
(1) the results obtained with the series of positive controls, solution C, comply with the requirements for validation defined in the *Assurance of criteria for the standard curve* under *Photometric method*;
(2) the endotoxin recovery, calculated from the concentration found in solution B after subtracting the endotoxin concentration found in solution A, is within the range of 50% to 200%;
(3) both reaction times of the solution D (negative control) are greater than that of the lowest concentration of the endotoxin standard curve.

Invaluation of results The preparation being examined complies with the test if the mean endotoxin concentration of the replicates of solution A, after correction for dilution and concentration, is less than the endotoxin limit for the product. Otherwise, the preparation being examined does not meet the requirements of the test.

Note In this chapter, the term "tube" includes all types of receptacles such as micro-titer plate wells.

Appendix XIV Water for Pharmaceutical Purposes

Water for Pharmaceutical Purposes is used as a solvent or a diluent for the cleaning, processing and extraction of Chinese crude drugs or for the formulation and administration of preparations during the manufacture and usage of traditional Chinese Patent Medicines and Simple Preparations; and is used for cleaning pharmaceutical manufacture equipment as well. Water for Pharmaceutical Purposes in this pharmacopoeia includes Drinking Water, Purified Water, Water for Injections and Sterile Water for Injections. Suitable type of Water for Pharmaceutical Purposes should be selected generally according to its procedures of production or the purposes and requirements of usage. Natural water should not be used as Water for Pharmaceutical Purposes.

Drinking Water Drinking Water is obtained by purifying natural water. The quality of Drinking Water complies with the national standard of the People's Republic of China (GB 5749—85 "Hygienic Standard of Living Drinking Water"). Drinking Water is used in the rinsing of the cleaning and processing of Chinese crude drugs and in the primary stages of the cleaning of pharmaceutical manufacture equipment. Unless specified otherwise, it is also used as a solvent for the extraction of Chinese crude drugs in ordinary preparations for oral administration or external application. Drinking Water should not be used for the extraction of Chinese crude drugs in sterile preparations such as injections and eye drops of traditional Chinese medicines.

Purified Water Purified Water is Water for Pharmaceutical Purposes prepared from Drinking Water by distillation, by ion exchange, by reverse osmosis or by other suitable methods. The quality of Purified Water complies with the requirements described under Purified Water in Volume Ⅱ. Purified Water should not contain any additive. It is used as a solvent for the extraction of Chinese crude drugs in sterile preparations such as injections of traditional Chinese medicines and eye drops, a solvent or a diluent for the formulation of preparations for oral administration or external application, and water for the thorough cleaning of apparatus for none-sterile preparations. It can also be used as a solvent for the extraction of Chinese crude drugs in none-sterile preparations, if necessary. Purified Water should not be used for the preparation and dilution of injections.

The procedure of production of purified water should be monitored strictly to avoid the microbial contamination. Purified Water should generally be freshly prepared before use when used as a solvent, a diluent or water for thorough cleaning.

Water for Injections Water for Injections is Water for Pharmaceutical Purposes obtained by distilling Purified Water. The quality of Water for Injections complies with the requirements described under Water for Injection in Volume Ⅱ.

Water for Injections is used as a solvent or a diluent for the preparation of injections, an aqueous phase of fatty emulsions for intravenous administration and water fot the thorough cleaning of containers of injections. To ensure the quality of Water for Injections, the links in the production chain of distillation should be monitored constantly, and the manufacture and transferring device should be cleaned and sterilized regularly. Qualified Water for Injection is collected, generally preserved under sterile conditions and used within 12 hours after preparation.

Sterile Water for Injections Sterile Water for Injections is prepared from water for injection according to the technological conditions under which injections are prepared. The quality of Sterile Water for Injection complies with the requirements described under Sterile Water for Injection in Volume Ⅱ.

Sterile Water for Injection is mainly used as a solvent for sterile powder for injections or a diluent for injections. Sterile Water for Injection should be packaged in suitable amount to meet the requirements of the clinical use and avoid the contamination caused by a large amount and frequent usage.

Appendix XV

XV A Reagents

Reagents are substances used for various assays and tests described in the Pharmacopoeia. However, adsorbents, supports and packing materials used in chromatography are not included. With the exception of biochemical reagents and indicators, chemical reagents are classified into 4 grades: primary standard, guaranteed reagent, analytical pure and chemical pure. The following rules may be followed in choosing the grade of reagent for different purpose.
(1) Primary standard should be used for standardization of volumetric solutions.
(2) Reagents of "analytical pure" or "chemical pure" grade may be used for the preparation of volumetric solutions, but in case of the concentration of the solution is determined according to the weight of the solute without standardization. In such cases, "primary standard" should be used.
(3) "Guaranteed reagents" or "analytical pure" grade should be used for the preparation of standard solutions used for limit tests of impurities.
(4) Reagents of "analytical pure" or "chemical pure" grade may be used for the preparation of test solutions and buffer solutions, etc.

Acacia White or Slightly yellow granules or powder. Freely soluble in water and forms viscous liquid; insoluble in ethanol.

Acetaldehyde [CH_3CHO 44.05]
A clear, colourless; volatile; inflammable; liquid; odour, stiling; easily oxidized into acetic acid; polymerized to form turbidity or sediment after long storage.
Miscible with water, ethanol, chloroform or ether.

Acetic Acid [$C_2H_4O_2$ 60.05]
A clear, colourless liquid; it contains 36%-37% of $C_2H_4O_2$ (g/g).
Miscible with water, ethanol or ether; insoluble in carbon disulfide.

Acetic Acid, Glacial [CH_3COOH 60.05]
A clear, colourless liquid; odour, irritant; corrosive; solidifies to icy crystal below its congealing point (16.7℃).
Miscible with water or ethanol.

Acetic Anhydride [$(CH_3CO)_2O$ 102.09]
A clear, colourless liquid.
Miscible with chloroform, ether or glacial acetic acid; soluble in water to form acetic acid; soluble in ethanol to form ethyl acetate.

Acetone [CH_3COCH_3 58.08]
A clear, colourless liquid; odour, characteristic; highly volatile; inflammable.
Soluble in water or ethanol.

Acetonitrile [CH_3CN 41.05]
A clear, colourless liquid; odour, slightly ether-like, inflammable.
Miscible with water or ethanol.

Acetylacetone [$CH_3COCH_2COCH_3$ 100.12]
A colourless or pale yellow liquid with slightly acetone and acetic acid odour; inflammable.
Miscible with water, ethanol, ether or chloroform.

Acetyl Chloride [CH_3COCl 78.50]
A colourless fumy liquid; odour, pungent; inflammable; highly irritant to skin, mucous membrane; decomposes vigorously in water or ethanol.
Soluble in chloroform, ether, benzene, or petroleum ether glacial acetic acid.

Activated Charcoal (Active Carbon) [C 12.01]
A black fine powder odourless, tasteless; having high adsorptive capacity for organic pigment and nitrogenous base.
Insoluble in any solvents.

Agar Complies with the requirements prescribed in the monograph of the Chinese Pharmacopoeia.

Agarose
White or pale yellow granules or powder; hygroscopic.
Soluble in hot water.

Ethanol, Aldehyde Free
Dissolve 2.5 g of lead acetate in a stoppered conical flask, with 5 ml of water, then add 1000 ml of ethanol, mix well, slowly add 25 ml of alcoholic potassium hydroxide solution (1→5), allow to stand for 1 hour, shake vigorously, allow to stand for 12 hours, decant the supernatant liquid and distil.
Introduce 25 ml of the distillate to a conical flask, add 75 ml of dinitrophenyl hydrazine TS, heat under reflux for 24 hours in a water bath, evaporate to expel ethanol, add 200 ml of 2% (ml/ml) solution of sulfuric acid, allow to stand for 24 hours, no sediment or crystal is produced.

Aluminium Hydroxide [$Al(OH)_3$ 78.00]
A white powder; odourless.
Soluble in hydrochloric acid, sulfuric acid or sodium hydroxide; insoluble in water or ethanol.

Aluminium Nitrate [$Al(NO_3)_3 \cdot 9H_2O$ 375.13]
White crystals; hygroscopic; induces combustion and explosion when heated with organic substances.
Freely soluble in water and ethanol; slightly soluble in acetone; insoluble in ethyl acetate or pyridine.

Aluminium Oxide [Al_2O_3 101.96]
A white powder; tasteless; hygroscopic.
Soluble in sulfuric acid; slowly soluble in aqueous sodium hydroxide solution with the formation of hydroxides; insoluble in water, ethanol or ether.

Aluminium Trichloride [$AlCl_3$ 133.34]
White or pale yellow crystals or a crystalline powder; odour, characteristic of hydrochloric acid; fuming on exposure to air; liberation of much heat or even explosion occurs in contact with water; hygroscopic; corrosive.

Soluble in water or ether.

4-Aminoantipyrine [$C_{11}H_{13}N_3O$ 203.24]
Pale yellow crystals.
Soluble in water, ethanol or benzene; slightly soluble in ether.

***p*-Aminobenzoic Acid** [$C_7H_7NO_2$ 137.14]
White crystals; turns pale yellow on exposure to air or to light.
Freely soluble in boiling water, ethanol, ether or acetic acid; very slightly soluble in water.

Ammonia [NH_3 17.03]
Obtained by heating ammonium salt (ammonium chloride) with strong base (calcium hydroxide), or heating concentrated ammonia solution then the gas is dried with calcium oxide.
Colourless; odour, characteristic of ammonia; liquefying at −33℃, congealing to colourless crystals at −78℃.
Very soluble in water with the liberation of much heat.

Ammonium Acetate [$NH_4C_2H_3O_2$ 77.08]
White granules or crystals; hygroscopic.
Soluble in water or ethanol; slightly soluble in acetone.

Ammonium Carbonate
A mixture of ammonium bicarbonate and ammonium carbonate; white transparent mass or powder; odour, ammonia-like.
Soluble in water, decomposes in hot water; insoluble in ethanol or concentrated ammonia solution.

Ammonium Chloride [NH_4Cl 53.49]
White crystals or a crystalline powder.
Soluble in water or glycerin; slightly soluble in ethanol.

Ammonium Molybdate [$(NH_4)_6Mo_7O_{24}\cdot 4H_2O$ 1235.86]
Colourless or pale yellowish-green crystals.
Soluble in water or ethanol.

Ammonium Nitrate [NH_4NO_3 80.04]
White, transparent crystals or a white powder.
Freely soluble in water; slightly soluble in ethanol.

Ammonium Oxalate [$(NH_4)_2C_2O_4\cdot H_2O$ 142.11]
White crystals; decompose on heating.
Soluble in water; slightly soluble in ethanol.

Ammonium Persulfate [$(NH_4)_2S_2O_8$ 228.20]
White, transparent crystals or powder; odourless; strong oxidizing agent.
Freely soluble in water.

Ammonium Reineckate [$NH_4Cr(NH_3)_2(SCN)_4\cdot H_2O$ 354.45]
Red or deep red crystals; decompose in aqueous solution with formation of a blue colour and liberate hydrogen cyanide.
Soluble in hot water and in alcohol; slightly soluble in water.

Ammonium Sulfate [$(NH_4)_2SO_4$ 132.14]
White crystals or granules.
Soluble in water; insoluble in ethanol or in acetone.

Ammonium Thiocyanate [NH_4SCN 76.12]
White crystals.
Freely soluble in water and ethanol; soluble in methanol and acetone; practically insoluble in chloroform or ethyl acetate.

Ammonium Vanadate [NH_4VO_3 116.98]
A white or slightly yellow crystalline powder.
Freely soluble in hot water or dilute ammonia solution; slightly soluble in cold water; insoluble in ethanol.

Amyl Acetate [$CH_3COOC_5H_{11}$ 130.19]
A clear, colourless liquid; odour, fruit-like; inflammable.
Miscible with ethanol or ether; slightly soluble in water.

Aniline [$C_6H_5NH_2$ 93.13]
A colourless or pale yellow, clear oily liquid; odour, characteristic; it turns brown gradually on exposure to light and air; inflammable.
Miscible with ethanol, ether or benzene; slightly soluble in water.

Anisaldehyde [$C_8H_8O_2$ 136.15]
A colourless or pale yellow oily liquid.
Miscible with ethanol or ether; slightly soluble in water.

Anthrone [$C_{14}H_{10}O$ 194.23]
White crystals.
Soluble in ethanol, benzene or hot sodium hydroxide solution; insoluble in water.

Antimony Trichloride [$SbCl_3$ 228.11]
White crystals; fuming on exposure to air; hygroscopic; corrosive.
Soluble in ethanol, acetone, ether or benzene; soluble in water and produces sediment of antimony hydroxide.

Arnebia
Complies with the requirements prescribed in the monograph of the Chinese Pharmacopoeia.

Arsenic Trioxide [As_2O_3 197.84]
A white crystalline powder; odourless; tasteless; when slowly heated, sublimes but does not decompose.
Soluble in hot water, sodium hydroxide solution or sodium carbonate solution; slightly soluble in cold water; practically insoluble in ethanol, chloroform or ether.

Ascorbic Acid (Vitamin C) [$C_6H_8O_6$ 176.13]
White crystals or a crystalline powder; odourless; taste, sour; darkens gradually on exposure to light. Very soluble in water and the aqueous solution exhibits acid reaction; sparingly soluble in ethanol; insoluble in chloroform or ether.

Auric Chloride [$HAuCl_4\cdot 3H_2O$ 393.83]
Bright yellow or orange crystals.
Soluble in water, ethanol or ether; slightly soluble in chloroform.

Barium Hydroxide [$Ba(OH)_2\cdot 8H_2O$ 315.46]
White crystals; absorbs carbon dioxide easily to form barium carbonate.
Freely soluble in water; slightly soluble in ethanol.

Barium Nitrate [$Ba(NO_3)_2$ 261.34]
White crystals or crystalline powder; burns and detonates when being in contact, rubbing or bumping with organic substances.
Soluble in water; slightly soluble in ethanol.

Benzalkonium Chloride A white or pale yellow powder or gelatinous flakes.
Very soluble in water, ethanol or acetone; slightly soluble in benzene; practically insoluble in ether.

Benzene [C_6H_6 78.11]
A colourless clear liquid; odour, characteristic; inflammable.
Miscible with ethanol, ether, acetone, carbon tetrachloride, carbon disulfide or acetic acid; slightly soluble in water.

Benzidine [$H_2NC_6H_4C_6H_4NH_2$ 184.24]
A white or faintly red crystalline powder; darkens on exposure to air and light.
Freely soluble in boiling ethanol; sparingly soluble in ether; slightly soluble in boiling water; very slightly soluble in cold water.

Benzidine Acetate [$C_{14}H_{16}N_2O_2$ 244.29]
White or pale yellow crystals or powder.
Soluble in water, acetic acid or hydrochloric acid; very

slightly soluble in ethanol.

Benzoic Acid [C_6H_5COOH 122.12]
Complies with the requirements prescribed in monograph of the Chinese Pharmacopoeia.

Benzoquinone [$C_6H_4O_2$ 108.10]
Yellow crystals; odour, characteristic; sublimable.
Soluble in ethanol or ether; slightly soluble in water.

Bismuth Subnitrate [$4BiNO_3(OH)_2 \cdot BiO(OH)$ 1461.99]
A white powder; heavy; odourless; tasteless; slightly hygroscopic.
Soluble in hydrochloric acid, nitric acid, dilute sulfuric acid or acetic acid; practically insoluble in water or ethanol.

Borax [$NaB_4O_7 \cdot 10H_2O$ 381.37]
White crystals or granules; hard.
Soluble in water and glycerin; insoluble in ethanol or acid.

Boric Acid [H_3BO_3 61.83]
White transparent crystals or a crystalline powder; with pear-like luster.
Freely soluble in hot water, hot ethanol or hot glycerin; soluble in water or ethanol; slightly soluble in acetone or ether.

Brilliant Green [$C_{27}H_{33}N_2 \cdot HSO_4$ 482.64]
Lustrous golden crystals.
Soluble in water or ethanol, the colour of solution is green.

Bromine [Br_2 159.81]
A deep red liquid; odour, asphyxiating irritant; fuming; freely volatile.
Miscible with ethanol, chloroform, ether, benzene or carbon disulfide; slightly soluble in water.

Bromocresol Green [$C_{21}H_{14}Br_4O_5S$ 698.02]
A pale yellow or brown powder.
Soluble in ethanol or dilute alkaline solution; insoluble in water.

Bromocresol Purple [$C_{21}H_{16}Br_2O_5S$ 540.23]
A pale yellow or pale red crystalline powder.
Soluble in ethanol or dilute alkaline solution; insoluble in water.

Bromophenol Blue [$C_{19}H_{10}Br_4O_5S$ 669.97]
A yellow powder.
Soluble in ethanol, ether, benzene or dilute alkaline solution; slightly soluble in water.

Bromothymol Blue [$C_{27}H_{28}Br_2O_5S$ 624.39]
A white or pale red crystalline powder.
Freely soluble in ethanol, dilute alkaline solution or ammonia solution; slightly soluble in water.

Butanol (*n*-Butanol) [$CH_3(CH_2)_3OH$ 74.12]
A clear, colourless liquid; odour, characteristic; inflammable; highly refractive.
Miscible with ethanol, ether or benzene; soluble in water.
Boiling point: 117-118℃.

Butanone [$CH_3COC_2H_5$ 72.11]
A colourless liquid; freely volatile; inflammable; azeotropic with water; acutely irritant to mucous membrane of nose and eyes.
Miscible with ethanol or ether.

Butyl Acetate [$CH_3COO(CH_2)_3CH_3$ 116.16]
A clear, colourless liquid.
Miscible with ethanol or ether; insoluble in water.

Caffeine [$C_8H_{10}N_4O_2 \cdot H_2O$ 212.21]
White or yellowish-green needle crystals with silky luster; odourless; taste bitter; efflorescent.
Freely soluble in hot water or chloroform; sparingly soluble in water, ethanol or acetone; slightly soluble in ether.

Calcein [$C_{30}H_{24}N_2Na_2O_{13}$ 666.51]
A bright yellow powder.
Soluble in water; insoluble in dehydrated ethanol or ether.

Calcium Carbonate [$CaCO_3$ 100.09]
A white crystalline powder.
Soluble in acid; insoluble in water and ethanol.

Calcium Chloride [$CaCl_2 \cdot 2H_2O$ 147.01]
White granules or lumps; hygroscopic.
Freely soluble in water or ethanol.

Calcium Chloride Anhydrous [$CaCl_2$ 110.99]
White granules or fused masses; highly hygroscopic.
Freely soluble in water or ethanol; liberates much heat when dissolved in water.

Calcium Fluoride [CaF_2 78.08]
A white powder or cubic crystals; luminous when heated.
Soluble in concentrated mineral acids to liberate hydrogen-fluoride; insoluble in water.

Calcium Hydroxide [$Ca(OH)_2$ 74.09]
A white crystalline powder; absorbs carbon dioxide easily to form calcium carbonate.
Slightly soluble in water.

Calcium Orthophosphate [$Ca_3(PO_4)_2$ 310.20]
A white amphorous powder; odourless, tasteless.
Stable in air, decomposive in hot water. Soluble in dilute hydrochloric acid or nitric acid; practically insoluble in water, ethanol or acetic acid.

Calcium Sulfate [$CaSO_4 \cdot 2H_2O$ 172.17]
A white crystalline powder.
Soluble in solutions of ammonium salts, sodium thiosulfate, sodium chloride or acids; insoluble in water or ethanol.

Calcon [$C_{20}H_{13}N_2NaO_5S$ 416.39]
A brown or brownish-black powder.
Soluble in water or ethanol.

Camphor [$C_{10}H_6O$ 152.24]
A white crystalline powder or colourless translucent hard solid, easily reduced to fine powder after adding a little ethanol, chloroform or ether; odour, pungent; taste, pungent then cool and refreshing; easily volatilizes at normal temperature, burns with black fume and luminous flame.
Very soluble in chloroform; freely soluble in ethanol, ether, fatty oil or volatile oil; very slightly soluble in water.

Camphor oil
Natural oil with strong odour of camphor.
Soluble in ether or chloroform; insoluble in ethanol.

Carbon Disulfide [CS_2 76.14]
A clear, colourless liquid; inflammable; the pure substance has an ether-like odour; the usual commercial grade has a foul smell; decomposes on standing for a long time.
Freely soluble in ethanol or ether; insoluble in water, it can dissolve iodine, bromine, sulphur, fat, rubber etc.
Boiling point: 46.5℃.

Carbon Tetrachloride [CCl_4 153.82]
A clear, colourless liquid; odour, characteristic; heavy.
Miscible with ethanol, chloroform, ether or benzene; very slightly soluble in water.

Casein
A white or pale yellow granular powder; odourless.
Insoluble in water or other neutral solvent; freely soluble in solutions of alkali hydroxide.

Catechol [$C_6H_6O_2$ 110.11]
Colourless or greyish crystals or a crystalline powder; volatilizes with steam.
Freely soluble in water, ethanol or benzene.

Ceric Ammonium Nitrate [$(NH_4)_2Ce(NO_3)_6$ 548.22]
Reddish-orange crystals; strong oxidizing agent.
Soluble in water or ethanol; insoluble in concentrated nitric acid.

Ceric Ammonium Sulfate [$(NH_4)_4Ce(SO_4)_4 \cdot 2H_2O$ 633]
A yellow or orange-yellow crystalline powder.
Soluble in solutions of acid; slightly soluble in water; insoluble in acetic acid.

Ceric Sulfate [$Ce(SO_4)_2$ 332.24]
Deep yellow crystals.
Soluble in hot acid solution; slightly soluble in water, decomposes with the formation of basic salt.

Cetrimonium Bromide [$C_{16}H_{33}N(CH_3)_3Br$ 364.45]
A white crystalline powder.
Soluble in water; slightly soluble in ethanol; insoluble in ether.

Chloral Hydrate [$C_2H_3Cl_3O_2$ 165.40]
White crystals; odour, pungent; irritant to skin; volatilizes on exposure to air; turns to yellow after long time storage.
Soluble in ethanol, chloroform or ether; soluble in water with hydrolysis.

Chloramine T [$C_7H_7ClNNaO_2S \cdot 3H_2O$ 281.69]
A white crystalline powder; odour, faintly chlorine-like.
Soluble in water; insoluble in chloroform or benzene.

Chlorinated Lime (Bleaching powder)
Complies with the requirements prescribed in monograph of the Chinese Pharmacopoeia.

Chlorine [Cl 35.45]
Obtained by the action of hydrochloric acid manganese dioxide.
Yellowish-green gas; odour, strong suffocating.
Freely soluble in carbon disulfide and carbon tetrachloride; soluble in water and alkaline solution.

Chloroform [$CHCl_3$ 119.38]
A colourless, clear liquid; heavy; refractive; volatilizes easily.
Miscible with ethanol, ether, benzene or petroleum benzin; slightly soluble in water.

Chloroplatinic Acid [$PtH_2Cl_6 \cdot 6H_2O$ 517.90]
Orange-red crystal. Soluble in water, ethanol and ether.

Chlorosulfonic Acid [SO_2ClOH 116.52]
A colourless or slightly yellow liquid; corrosive and strongly irritant; fuming in air; explosive when dripped into water; decomposes to sulfuric acid and hydrochloric acid in water.

Cholesterol [$C_{27}H_{46}O$ 386.66]
Monohydrate of cholesterol is white or pale yellow laminar crystals; anhydrous cholesterol is obtained at 70-80℃; it turns to yellow on exposure to air.
Soluble in benzene, petroleum benzin or vegetable oil; slightly soluble in ethanol; practically insoluble in water.

Chromic Acid [H_2CrO_4 118.01]
An aqueous solution of chromium trioxide.

Chromium Trioxide [CrO_3 99.99]
Dark red crystals; powerful oxidizing agent and corrosive; hygroscopic; may cause fire in contact with organic substances.
Freely soluble in water; soluble in sulfuric acid.

Chromotropic Acid [$C_{10}H_8O_8S_2 \cdot 2H_2O$ 356.33]
White crystals.
Soluble in water.

Citric Acid [$C_6H_8O_7 \cdot H_2O$ 210.14]
White crystals or granules; efflorescent; hygroscopic.
Freely soluble in water or ethanol.

Cobaltous Acetate [$CO(C_2H_3O_2)_2 \cdot 4H_2O$ 249.08]
Violet-red crystals.
Soluble in water, ethanol, dilute acid or amyl acetate.

Cobaltous Chloride [$CoCl_2 \cdot 6H_2O$ 237.93]
Red or purplish-red crystals.
Freely soluble in water or ethanol; soluble in acetone; slightly soluble in ether.

Cobaltous Nitrate [$Co(NO_3)_2 \cdot 6H_2O$ 291.03]
White crystals or crystalline granules.
Freely soluble in water or ethanol; slightly soluble in acetone or ammonia solution.

Concentrated Ammonia Solution (Strong ammonia solution) [NH_4OH 35.05]
A colourless, clear liquid; corrosive; contains 25%-28% (g/g) of NH_3.
Miscible with ethanol or ether.

Congo Red [$C_{32}H_{22}N_6Na_2O_6S_2$ 696.68]
A reddish-brown powder.
Soluble in water or ethanol.

Coomassie Brilliant Blue G 250 [$C_{47}H_{48}N_3NaO_7S_2$ 854.04]
A violet crystalline powder.
Soluble in hot water or ethanol; slightly soluble in water.

Coomassie Brilliant Blue R 250 [$C_{45}H_{44}N_3NaO_7S_2$ 825.99]
A violet powder.
Soluble in hot water or ethanol; insoluble in water.

***O*-Cresol** [$CH_3C_6H_4OH$ 108.14]
A colourless liquid or crystal; odour, phenolic; corrosive and poisonous; changes into brown gradually on exposure to air and light.
Soluble in ethanol, ether or chloroform; slightly soluble in water.

Crystal Violet [$C_{25}H_{30}ClN_3$ 407.99]
A dull green powder with metallic luster.
Soluble in water, ethanol or chloroform; insoluble in ether.

Copper [Cu 63.55]
Red brown slices, granules, crumbs or powder; lustrous; stable under dry air and room temperature, produces basic salts on exposure to moist air for a long time.
Freely soluble in hot sulfuric or nitric acid; soluble in ammonia solution and produces complex salt.

Cupric Acetate [$Cu(C_2H_3O_2)_2 \cdot H_2O$ 199.65]
Dark green crystals.
Soluble in water or ethanol; slightly soluble in ether or glycerin.

Cupric Carbonate, Basic [$CuCO_3 \cdot Cu(OH)_2$ 221.12]
A green or blue amorphous powder or greyish-green crystal; poisonous.
Soluble in dilute acid or ammonia solution; insoluble in water or ethanol.

Cupric Chloride [$CuCl_2 \cdot 2H_2O$ 170.48]
Pale Bluish-green crystals.
Soluble in water, ethanol or methanol; slightly soluble in acetone or ethyl acetate.

Cupric Nitrate [$Cu(NO_3)_2 \cdot 3H_2O$ 241.60]
Blue, columnar crystals; burns and detonates when heated, rubbed or bumped with pulverized carbon, sulphur or other combustible substances.
Soluble in water or ethanol.

Cupric Sulfate [$CuSO_4 \cdot 5H_2O$ 249.69]
Blue crystals, granules or crystalline powder.
Soluble in water; slightly soluble in ethanol.

Cupric Sulfate, Anhydrous [$CuSO_4$ 159.61]

Greyish-white or greenish-white crystals or an amorphous powder; hygroscopic.
Soluble in water; practically insoluble in ethanol.

Curcuma Powder (Turmeric Powder)
A powder of the rhizome of *Cureuma longa* L. (Fam. Gingiberaceae), containing 5% volatile oil, yellow curcumin, starch and resin.

Cyclohexane [C_6H_{12} 84.16]
A colourless, clear liquid; inflammable.
Miscible with methanol, ethanol, acetone, ether, benzene or carbon tetrachloride; practically insoluble in water.
Boiling point: 80.7℃.

Cyclohexanone [$C_6H_{10}O$ 98.14]
A colourless oily liquid; odour resembling peppermint or acetone; its vapour mixed with air is explosive.
Miscible with ethanol or ether; slightly soluble in water.

L-Cystine [$C_6H_{12}N_2O_4S_2$ 240.30]
White crystals.
Soluble in acid or alkali solution; practically insoluble in water or ethanol.

Dextrin
Complies with the requirements prescribed in monograph of the Chinese Pharmacopoeia.

Diammonium Hydrogen Citrate [$(NH_4)_2HC_6H_5O$ 226.19]
A colourless tiny crystal or white granule.
Soluble in water; slightly soluble in ethanol.

Diammonium Hydrogen Phosphate [$(NH_4)_2HPO_4$ 132.06]
White crystals or a crystalline powder.
It loses ammonia on exposure to air and turns into ammonium dihydrogen phosphate.
Soluble in water; insoluble in ethanol.

***O*-Dianisidine** [$(CH_3OC_6H_3NH_2)_2$ 244.9]
White crystals.
Soluble in ethanol, ether or benzene; insoluble in water.

Dichloromethane [CH_2Cl_2 84.93]
A colourless liquid; odour, ether-like.
Miscible with ethanol, ether or dimethylformamide; sparingly soluble in water.
Boiling point 40-41℃.

2,6-Dichloroquinone Chlorimide [$C_6H_2Cl_3NO$ 210.45]
A greyish-yellow crystalline powder.
Freely soluble in chloroform or ether; soluble in hot ethanol or dilute sodium hydroxide solution; insoluble in water.

Diethylamine [$(C_2H_5)_2NH$ 73.14]
A colourless liquid; volatile; inflammable; odour, ammonia like; strongly alkaline, corrosive.
Miscible with water or ethanol.

Digitonin [$C_{56}H_{92}O_{29}$ 1229.33]
White crystals.
Sparingly soluble in dehydrated ethanol; slightly soluble in ethanol; practically insoluble in water, chloroform or ether.

***p*-dimethylaminobenzaldehyde** [$C_9H_{11}NO$ 149.19]
White or pale yellow crystals; odour, characteristic; gradually turns to red on exposure to light.
Soluble in ethanol, acetone, chloroform, ether or acetic acid; slightly soluble in water.

Dimethylformamide [$HCON(CH_3)_2$ 73.09]
A colourless liquid with slightly ammonia odour.
Miscible with water, ethanol, chloroform or ether.

Dimethylsulfoxide [$(CH_3)_2SO$ 78.14]
A colourless, viscous liquid; very hygroscopic; taste, slightly bitter; violent reaction occurs in contact with chlorine at room temperature.
Soluble in water, ethanol, acetone, chloroform, ether or Benzene.

***m*-Dinitrobenzene** [$C_6H_4(NO_2)_2$ 168.11]
A pale yellow crystal; inflammable.
Freely soluble in chloroform, ethyl acetate or benzene; soluble in ethanol; slightly soluble in water.

3,5-Dinitrobenzoic Acid [$C_7H_4N_2O_6$ 212.12]
White or pale yellow crystals; volatilizes with steam.
Freely soluble in ethanol or glacial acetic acid; soluble in water, benzene or carbon disulfide.

2,4-Dinitrochlorobenzene [$C_6H_3ClN_2O_4$ 202.55]
Yellow crystals. It may cause explosion when heated to high temperature.
Freely soluble in hot ethanol; soluble in ether, benzene or carbon disulfide; insoluble in water.

2,4-Dinitrophenylhydrazine [$C_6H_6H_4O_4$ 198.14]
A red crystalline powder; stable in acid solution, unstable in alkaline solution.
Soluble in hot ethanol, ethyl acetate, aniline or dilute mineral acids; slightly soluble in water and ethanol.

Dioxane [$C_4H_8O_2$ 88.11]
A colourless liquid; inflammable; odour ether-like; freely absorbs oxygen to form peroxide.
Miscible with water or most of organic solvents.
Boiling range: 100-103℃.

Diphenylamine [$(C_6H_5)_2NH$ 169.23]
White crystals, odour, aromatic; gradually discolours on exposure to light.
Soluble in ether, benzene, glacial acetic acid or carbon disulfide; insoluble in water.

Diphenylcarbazide [$C_6H_5NHNHCONHNHC_6H_5$ 242.28]
A white, crystalline powder; gradually turns to red in air.
Soluble in hot ethanol, acetone or glacial acetic acid; very slightly soluble in water.

Dipotassium Hydrogen Phosphate [K_2HPO_4 174.18]
White granules or a crystalline powder.
Freely soluble in water; slightly soluble in ethanol.

Disodium Edetate [$C_{10}H_{14}N_2Na_2O_8 \cdot 2H_2O$ 372.24]
A white crystalline powder.
Soluble in water; very slightly soluble in ethanol.

Disodium Hydrogen Phosphate [$Na_2HPO_4 \cdot 12H_2O$ 358.14]
White crystals or a granular powder; efflorescent.
Soluble in water; insoluble in ethanol.

Disodium Hydrogen Phosphate, Anhydrous [Na_2HPO_4 141.96]
A white crystalline powder; hygroscopic; it can absorb 2-7 mol of water on exposure to air for a long time.
Freely soluble in water; insoluble in ethanol.

Distilled Water, Ammonia Free
To 1000 ml of distilled water add 1 ml of dilute sulfuric acid and 1 ml of potassium permanganate TS, distil.
To 50 ml of the distillate add 1 ml of alkaline mercuric potassium iodide TS, no colour is produced.

Dithizone [$C_6H_5NHNHCSNNC_6H_5$ 256.33]
A bluish-black crystalline powder.
Soluble in chloroform or carbon tetrachloride; insoluble in water.

Eosin Sodium [$C_{20}H_6Br_4Na_2O_5$ 691.86]
A red powder.
Freely soluble in water; an aqueous solution exhibits a red fluorescence; slightly soluble in ethanol; insoluble in ether.

Eriochrome Black T [$C_{20}H_{12}N_3NaO_7S$ 461.39]
A brownish-black powder.

Soluble in water or ethanol.

Ethanol [C_2H_5OH 46.07]
Complies with the requirements prescribed in monograph of the Chinese Pharmacopoeia.

Ethanol Dehydrated [C_2H_5OH 46.07]
A clear, colourless liquid; odour, alcoholic; it contains not more than 0.3% of water.
Miscible with water, acetone or ether.
Boiling Point: 78.5℃.

Ether [$C_2H_5OC_2H_5$ 74.12]
A clear, colourless liquid; taste, paralysing sweet and astringent; freely volatile; inflammable; anaesthetic; oxidized to peroxide on exposure to light or on long storage.

Ether Dehydrated [$(C_2H_5)_2 \cdot O$ 74.12]
As described under Ether, but its water content is less than that of Ether.

Ethyl Acetate [$CH_3COOC_2H_5$ 88.11]
A clear, colourless liquid.
Miscible with acetone, chloroform or ether; soluble in water.

Ethyl Formate [$HCOOC_2H_5$ 74.08]
A mobile, flammable liquid; irritant to skin and mucous membranes; anaesthetic in high dosage.
Miscible with ethanol or ether; soluble in about 10 parts of water and gradually decomposes into formic acid and ethanol.

Ferric Ammonium Sulfate [$FeNH_4(SO_4)_2 \cdot 12H_2O$ 482.20]
White to pale violet crystals.
Soluble in water; insoluble in ethanol.

Ferric chloride [$FeCl_3 \cdot 6H_2O$ 270.30]
Brownish-yellow or orange-yellow crystals; highly hygroscopic.
Freely soluble in water, ethanol, acetone, ether or glycerin.

Ferrous Sulfate [$FeSO_4 \cdot 7H_2O$ 278.02]
Pale blue crystals or granules.
Soluble in water; insoluble in ethanol.

Fluorescein [$C_{20}H_{12}O_5$ 332.11]
An orange or red powder.
Soluble in hot ethanol, glacial acetic acid; in sodium carbonate solution or sodium hydroxide solution; insoluble in water, chloroform or benzene.

Formaldehyde Solution [HCHO 30.03]
A colourless liquid; odour, pungent; it becomes muddy with polymerization when cooled. Slowly oxidized to formic acid on exposure to air. It contains about 37% of HCHO.
Miscible with water or ethanol.

Formamide [$HCONH_2$ 45.04]
A colourless, slightly viscous liquid with faint odour of ammonia; hygroscopic; irritant.
Miscible with water or ethanol.

Formic Acid [HCOOH 46.03]
A clear, colourless liquid; odour, pungent; corrosive to skin. It contains not less than 85% of HCOOH.
Miscible with water, ethanol, ether or glycerin.

Formic Acid, Anhydrous [HCOOH 46.03]
A clear, colourless liquid; odour, pungent; highly corrosive; strongly acidic; it contains not less than 98% of HCOOH.
Miscible with water, ethanol or ether.

Fuchsin Basic
Dark green crystals with metallic lustre.
Soluble in water or ethanol; insoluble in ether.

Furfural [$C_5H_4O_2$ 96.09]
A colourless or pale yellow oily liquid; easily turns to brown on exposure to air or light.
Miscible with water, ethanol or ether.

Gallic Acid [$C_7H_6O_5 \cdot H_2O$ 188.14]
White or pale brown crystals or a powder.
Soluble in hot water, ethanol or ether; insoluble in chloroform or benzene.

Gelatin
Pale yellow to yellow, translucent and faintly lustrous granules or thin sheets; odourless. Easily decomposed by microorganisms when moistened. Swell and softens when immersed in water for a long duration, its weight increases gradually five to ten times due to the absorption of water.
Soluble in hot water, acetic acid or a hot mixture of glycerol and water; insoluble in ethanol, chloroform or ether.

Glucose [$C_6H_{12}O_6 \cdot H_2O$ 198.17]
Complies with the requirements prescribed in monograph of the Chinese Pharmacopoeia.

Glycerin (Glycerol) [$C_3H_8O_3$ 92.09]
A clear, colourless, viscous liquid; odourless; taste, sweet; hygroscopic.
Miscible with water or ethanol.

Heptane [C_7H_{16} 100.20]
A colourless, clear liquid, inflammable.
Miscible with ethanol, chloroform or ether; insoluble in water. Boiling point: 98.4℃.

***n*-Hexane** [C_8H_{14} 86.18]
A clear, colourless liquid; odour, characteristic; highly volatile; irritant to respiratory tract.
Miscible with ethanol or ether, insoluble in water.
Boiling point: 69℃.

Holmium Oxide [Ho_2O_3 377.86]
Yellow solid; slightly hygroscopic; dissolves in acid with formation of a yellow salt.
Freely soluble in water.

Hydrazine Sulfate [$(NH_2)_2 \cdot H_2SO_4$ 130.12]
White crystals or powder.
Freely soluble in hot water; slightly soluble in water or ethanol.

Hydroiodic Acid [HI 127.91]
Solution of hydrogen iodide, colourless; on exposure to air and light quickly produces iodine and coloured from yellow to brown; corrosive; odour, strongly pungent.
Miscible with water or ethanol.

Hydrochloric Acid [HCl 36.46]
A colourless, clear liquid; odour, pungent and characteristic; corrosive; fuming on exposure to air. It contains 36%-38% (g/g) of HCl.
Miscible with water or ethanol.

Hydrofluoric Acid [HF 20.01]
A colourless, fuming liquid; odour, pungent; highly corrosive to metal or glass.
Miscible with water or ethanol.

Hydrogen Peroxide Solution (30%) [H_2O_2 34.01]
A colourless, clear liquid; strong oxidizing agent and corrosive.
Miscible with water or ethanol.

Hydroquinone [$C_6H_4(OH)_2$ 110.11]
White or almost white crystals; discoloured on exposure to light.
Freely soluble in hot water, soluble in water, ethanol or ether.

Hydroxylamine Hydrochloride [$NH_2OH \cdot HCl$ 69.49]
White crystals; decomposes easily when moistened, corrosive.

Soluble in water, ethanol or glycerin.

5-Hydroxymethyl Furfural [$C_6H_6O_3$ 126.11]
A needle crystal.
Freely soluble in methanol, ethanol, acetone, ethyl acetate and water; soluble in benzene, chloroform and ether; difficult to resolve in petroleum ether.

Iodine [I_2 253.81]
Purplish-black scale crystals or masses with metallic lustre.
Soluble in ethanol, ether or solution of potassium iodide; very slightly soluble in water.

Iodine Monochloride [ICl 162.36]
A brownish-red, oily liquid or dark-red crystals; strongly irritant; with odour of chlorine and iodine; corrosive and oxidative.

Iodine Trichloride [ICl_3 233.26]
Yellow or pale brown crystals; odour strongly pungent; volatile at room temperature; readily decomposes in contact with water; hygroscopic; corrosive.
Soluble in water, ethanol, ether or benzene.

Iron [Fe 55.85]
A silky grey, or greyish black amorphous powder; easily oxidized on exposure to moist air.
Soluble in dilute acid; insoluble in concentrated acid and dilute alkaline solution.

Isatin [$C_8H_5NO_2$ 147.13]
Dark red crystals or a crystalling powder; taste, bitter; sublimable.
Soluble in ether or boiling water; freely soluble in boiling ethanol; practically insoluble in cold water.

Isoamyl Acetate [$CH_3COOCH_2CH_2CH(CH_3)_2$ 130.19]
A clear, colourless liquid; odour, characteristic resembling that of banana.
Miscible with ethyl acetate, ethanol, amyl alcohol, ether, benzene or carbon disulfide; very slightly soluble in water.

Isobutanol [$(CH_3)_2CHCH_2OH$ 74.12]
A colourless, clear liquid; strongly refractive; inflammable.
Missible with water, ethanol or ether.
Boiling range: 107.3-108.3℃.

Isobutyl Acetate [$CH_3COOCH_2CH(CH_3)_2$ 116.16]
A colourless liquid; inflammable.
Miscible with ethanol or ether; insoluble in water.

Isooctane
See Trimethylpentane.

Isopentanol [$(CH_3)_2CHCH_2CH_2OH$ 88.15]
A colourless liquid; odour, characteristic; inflammable.
Miscible with organic solvent; slightly soluble in water.

Isopropanol [$(CH_3)_2CHOH$ 60.10]
A colourless, clear liquid; odour, characteristic; taste, slightly bitter.
Miscible with water, ethanol or ether.
Boiling range: 82.0-83.0℃.

Isopropyl Ether [$C_6H_{14}O$ 102.18]
A colourless, clear liquid; inflammable.
Miscible with ethanol, ether, chloroform or benzene; slightly soluble in water.

Kerosene, Refined
A colourless or pale yellow oily liquid; odour, characteristic.
Miscible with chloroform, benzene or carbon disulfate; insoluble in water or ethanol.
Wash 300 ml of commercial kerosene with 20 ml of crude sulfuric acid in a 500 ml separator for 4-5 times, until the acid layer is pale black, separate the kerosene layer and wash with water. Then wash it with 20 ml of sodium hydroxide solution (1→5), wash it with water and dehydrate with anhydrous, calcium chloride, transfer it into a distilling flask, distil under an air condenser on a sand bath. Collect the distillate in the range of 160-250℃.

Kieselguhr
A white or almost white powder; strongly adsorptive powder and good filter medium.
Insoluble in water, acid or alkali solution.

Lactic acid [$CH_3CH(OH)COOH$ 90.08]
Complies with the requirements prescribed in monograph of the Chinese Pharmacopoeia.

Lactose [$C_{12}H_{22}O_{11} \cdot H_2O$ 360.31]
White crystalline granules or a crystalline powder; odourless; taste, slightly sweet. Freely soluble in water; insoluble in ethanol, chloroform of ether.

Lead Acetate [$Pb(C_2H_3O_2)_2 \cdot 3H_2O$ 379.34]
White crystals or a powder.
Freely soluble in water or glycerin; soluble in ethanol.

Lead Monoxide [PbO 233.20]
A yellow to brownish-yellow powder or crystals.
At 300-500℃, it converts into Pb_3O_4, but at higher temperature reverts to PbO.
Soluble in hot solution of sodium hydroxide, acetic acid or dilute nitric acid.

Lead Nitrate [$Pb(NO_3)_2$ 331.21]
White crystals; burns and detonates when in contact, rubbed or bumped with organic substances.
Soluble in water; slightly soluble in ethanol.

Liquid paraffin
A colourless oily liquid; almost odourless; tasteless.
Soluble in benzene, ether or chloroform; insoluble in water or ethanol.

Litmus
A blue powder or mass.
Partly soluble in water or ethanol.

Lithium Sulfate [$Li_2SO_4 \cdot H_2O$ 127.96]
White crystalline powder. Soluble in water, insoluble in ethanol.

Magnesium [Mg 24.31]
A silky white powder with metallic lustre.
Soluble in acid; insoluble in water.

Magnesium Acetate [$(CH_3COO)_2Mg$ 142.39]
White crystals; Hygroscopic.
Freely soluble in water or ethanol.

Magnesium Chloride [$MgCl_2 \cdot 6H_2O$ 203.30]
White crystals or a powder; hygroscopic.
Soluble in water or ethanol.

Magnesium Oxide [MgO 40.30]
A white very fine powder; odourless; easily absorbs water and carbon dioxide on exposure to air, produces magnesium hydroxide with water.
Soluble in dilute acid; very slightly soluble in pure water; insoluble in ethanol.

Magnesium Sulfate [$MgSO_4 \cdot 7H_2O$ 246.48]
White crystals or a powder; efflorescent.
Freely soluble in water; slowly soluble in glycerin; slightly soluble in ethanol.

Malonic Acid [$C_3H_4O_4$ 104.06]
White transparent crystals; strongly irritant.
Soluble in water, methanol, ethanol, ether or pyridine.

Maltose [$C_{12}H_{22}O_{11}$ 342.30]
White crystals (β-type); odour, sweet.

Freely soluble in water; slightly soluble in ethanol; insoluble in ether.
Specific rotation: $[\alpha]_D^{20}$ +125°-+137°.

Manganese Dioxide [MnO_2 86.94]
Black crystals or a powder. It can cause burning or explosion when heated or rubbed with organic substances or other oxidizable substances.
Insoluble in water, nitric acid or cold sulfuric acid; soluble in nitric acid or dilute sulfuric acid in presence of hydrogen peroxide or oxalic acid.

Manganese Sulfate [$MnSO_4 \cdot H_2O$ 169.02]
Pink crystals.
Soluble in water; insoluble in ethanol.

Mannitol [$C_6H_{14}O_6$ 182.17]
White crystals; odourless; taste, sweet.
Soluble in water; slightly soluble in ethanol.

Mercuric Acetate [$Hg(C_2H_3O_2)_2$ 318.68]
White crystals or a powder; odour, resembling acetic acid.
Soluble in water or ethanol.

Mercuric Bromide [$HgBr_2$ 360.40]
White crystals or a crystalline powder.
Freely soluble in hot ethanol, hydrochloric acid, hydrobromic acid or solution of potassium bromide; slightly soluble in chloroform or ether.

Mercuric Chloride [$HgCl_2$ 271.50]
White crystals or a crystalline powder, slightly volatile at room temperature. It decomposes to mercurous chloride on exposure to light.
Soluble in water, ethanol, acetone or ether.

Mercuric Nitrate [$Hg(NO_3)_2 \cdot H_2O$ 342.62]
A white or slightly yellow crystalline powder, with an odour of nitric acid; hygroscopic.
Freely soluble in water or dilute acid; a precipitate of basic salt is formed in a large amount of water or boiling water.

Mercuric Oxide, Yellow [HgO 216.59]
A yellow or orange powder; heavy; darkens gradually on exposure to light.
Freely soluble in dilute sulfuric acid, dilute hydrochloric acid or dilute nitric acid; insoluble in water, ethanol, acetone or ether.

Mercuric Sulfate [$HgSO_4$ 296.65]
White granules or a crystalline powder.
Soluble in hydrochloric acid, hot dilute sulfuric acid or concentrated sodium chloride solution.

Mercurous Nitrate [$HgNO_3 \cdot H_2O$ 280.61]
White crystals; usually with an odour of nitric acid.
Freely soluble in water or dilute nitric aicd.
A precipitate of basic salt is formed in a large amount of water.

Mercury [Hg 200.59]
A silver-white lustrous, liquid metal; heavy; slightly volatile at room temperature; produces amalgam with metals other than iron.
Soluble in dilute nitric acid; insoluble in water.

Metacresol Purple [$C_{21}H_{18}O_5S$ 382.44]
A reddish-yellow or brownish-green powder.
Freely soluble in methanol, ethanol or sodium hydroxide solution; slightly soluble in water.

Methanol [CH_3OH 32.04]
A clear, colourless liquid; volatile; inflammable. It contains 0.1% of water.
Miscible with water, ethanol or ether.
Boiling point: 64-65℃.

Methanol, Dehydrated [CH_3OH 32.04]
A clear, colourless liquid; volatile; burns with a bluish flame without fume. It contains not more than 0.05% of water.
Miscible with water, ethanol or ether.
Boiling point: 64.7℃.

Methyl Acetate [CH_3COOCH_3 74.08]
A clear, colourless liquid.
Miscible with water, ethanol or ether.

Methylene Blue [$C_{16}H_{18}ClN_3S \cdot 3H_2O$ 373.90]
Deep emerald green crystals or a dark brown powder; with bronze lustre.
Freely soluble in hot water.

Methyl Orange [$C_{14}H_{14}N_3NaO_3S$ 327.34]
Orange crystals or a powder.
Freely soluble in hot water; practically insoluble in ethanol.

Methyl Red [$C_{15}H_{15}N_3O_2$ 269.30]
Purplish-red crystals.
Soluble in ethanol or acetic acid; insoluble in water.

α-Naphthol (1-Naphthol) [$C_{10}H_7OH$ 144.17]
White, pale pink crystals or powder; odour, phenolic; darkens gradually on exposure to light.
Freely soluble in ethanol, chloroform, ether, benzene or alkali solution; slight soluble in water.

β-Naphthol (2-Naphthol) [$C_{10}H_7OH$ 144.17]
White or pale yellow crystals or a powder; odour, characteristic; discoloured easily on exposure to light.
Freely soluble in ethanol, ether, glycerin or sodium hydroxide solution; soluble in hot water; slightly soluble in water.

Neutral Red [$C_{15}H_{17}N_4Cl$ 288.78]
A dark green or brownish-black powder.
Soluble in water or ethanol.

Neutral Ethanol
To ethanol add 2-3 drops of phenolphthalein IS, titrate with sodium hydroxide (0.1 mol/L) VS to pink colour.

Ninhydrin [$C_9H_6O_4$ 178.14]
A white or pale yellow crystalline powder; hygroscopic; discoloured gradually on exposure to light and air.
Soluble in water or ethanol; slightly soluble in chloroform or ether.

Nitric Acid [HNO_3 63.01]
A colourless, clear liquid; fumes on exposure to air; odour, suffocating irritant; turns to brown with formation of nitrogen tetroxide on exposure to light.
It contains 69%-71% (g/g) of HNO_3.
Miscible with water.

Nitric Acid, Fuming [HNO_3 63.01]
A clear, colourless or slightly yellowish-brown liquid; highly oxidative and corrosive; A reddish-yellow fog of nitrogen dioxide and nitrogen tetroxide is produced on contact with air.
Miscible with water.

***p*-Nitroaniline** [$C_6H_6N_2O_2$ 138.13]
Yellow crystals or powder.
Freely soluble in methanol; soluble in ethanol or ether; insoluble in water.

Nitrobenzene [$C_6H_5NO_2$ 123.11]
A colourless or pale yellow oily liquid; odour, bitter almond-like.
Freely soluble in ethanol, ether, benzene or oil; very slightly soluble in water.

***n*-Octanol** [$CH_3(CH_2)_7OH$ 130.23]
A colourless liquid; odour, characteristically aromatic.
Miscible with ethanol, ether chloroform; insoluble in

water.

Olive Oil
A pale yellow or slightly green liquid.

Oxalic Acid [$H_2C_2O_4 \cdot 2H_2O$ 126.07]
White, transparent crystals or crystalline granules; efflorescent.
Freely soluble in water or ethanol; insoluble in chloroform or benzene.

Palladium Chloride [$PdCl_2$ 177.33]
Red, needle crystals; hygroscopic.
Soluble in water, ethanol, acetone or hydrobromic aicd.

Pancreatic Digest of Casein
Yellow granules. Casein hydrolyzed with pancreatin decolourized and purified with active carbon. It is used as culture medium of bacteria, especially in test for sterility.

Pancreatin
An almost white or slightly yellow powder; odour, slight but not moldy; hydroscopic. The aqueous solution is inactivated by acid or on boiling.

***n*-Pentanol** [$C_5H_{12}O$ 88.15]
A clear, colourless liquid; odour; peculiar and pungent. Its vapour can form explosive mixture with air.
Miscible with ethanol or ether; slightly soluble in water.
Boiling point: 138.1℃.

Pepsin
White to yellowish flakes or granules; taste, slightly sour and salty; hygroscopic.
Freely soluble in water; practically insoluble in ethanol, chloroform or ether.

Peptone
A yellow or pale yellow powder; odourless; taste, slightly bitter.
Soluble in water; insoluble in ethanol or ether.

Perchloric Acid [$HClO_4$ 100.46]
A colourless, clear liquid; strong oxidant; very hygroscopic; volatile and corrosive.
Miscible with water.

Periodic Acid [$HIO_4 \cdot 2H_2O$ 227.94]
Colourless monoclinic crystals; hygroscopic; changes to slightly yellow on exposure to air; oxidative.
Freely soluble in water; soluble in ethanol; slightly soluble in ether.

Petroleum Benzin
A clear colourless liquid; odour, characteristic; low boiling fractions of petroleum benzin is highly volatile.
Miscible with dehydrated ethanol, ether or benzene; insoluble in water.
Boiling range: 30-60℃; 60-90℃; 90-120℃.

Phenol [C_6H_6O 94.11]
Colourless or faintly pink needle crystals or a crystalline mass; odour, characteristic; hygroscopic; gradually darkens on exposure to light and air. Freely soluble in ethanol, chloroform, ether, glycerin and volatile oils; soluble in water; sparingly soluble in liquid paraffin.

Phenol, Liquefied
To 90 g of phenol add a little water, heat slowly on a water bath until liquefied, cool, add sufficient water to produce 100 ml.

Phenylhydrazine Hydrochloride [$C_6H_8N_2 \cdot HCl$ 144.60]
White or white transparent crystals; combustible.
Freely soluble in water; soluble in ethanol, practically insoluble in ether.

Phloroglucinol [$C_6H_3(OH)_3 \cdot 2H_2O$ 162.14]
A white or pale yellow crystalline powder; taste, sweet. It turns to pale red on exposure to light.
Freely soluble in water.

Phenolphthalein [$C_{20}H_{14}O_4$ 318.33]
A white powder.
Soluble in ethanol; insoluble in water.

Phenolsulfonphthalein (Phenol red) [$C_{19}H_{14}O_5S$ 354.38]
A deep red crystalline powder.
Soluble in ethanol, solution of sodium hydroxide or sodium carbonate; insoluble in water, chloroform or ether.

Phosphorus Pentoxide [P_2O_5 141.94]
A white powder, odour alliaceous; corrosive; highly hygroscopic.

Phosphomolybdic Acid [$P_2O_5 \cdot 20MoO_3 \cdot 51H_2O$ 3939.49]
Bright yellow crystals.
Soluble in water, ethanol or ether.

Phosphoric Acid [H_3PO_4 98.00]
A clear, colourless, viscous liquid; corrosive.
Soluble in water.

Phosphotungstic Acid [$P_2O_5 \cdot 20WO_3 \cdot 28H_2O$ 5283.34]
White or pale yellow crystals.
Soluble in water, ethanol or ether.

Polyethylene Glycol 1500
A white or cream waxy solid; odour, characteristic; melts on heating.
Soluble in water or ethanol.

Polyethylene Glycol Glutarate
[$HO(CH_2CH_2OCO(CH_2)_3COO]_nH$ 600-800]
A brownish black viscous liquid.
Soluble in acetone or chloroform.

Polysorbate 80
A pale red, oily liquid; odour, fat-like.
Freely soluble in water, ethanol, methanol or ethyl acetate.
Practical insoluble in mineral oils.

Potassium Acetate [$KC_2H_3O_2$ 98.14]
White crystals or powder; hygroscopic.
Freely soluble in water or ethanol.

Potassium Alum [$AlK(SO_4)_2 \cdot 12H_2O$ 474.39]
White, transparent crystals or powder; odourless; taste, slightly sweet and astringent.
Freely soluble in glycerin or water; insoluble in ethanol or acetone.

Potassium antimonyl tartrate [$C_4H_4KO_7Sb \cdot \frac{1}{2}H_2O$ 333.93]
White transparent crystals or a white powder; odourless; taste, slightly sweet; efflorescent.
Soluble in water; insoluble in ethanol.

Potassium Biphthalate [$KHC_6H_4(COO)_2$ 204.22]
A white crystalline powder.
Soluble in water; slightly soluble in ethanol.

Potassium Bisulfate [$KHSO_4$ 136.17]
White crystals; its aqueous solution is strongly acidic.
Soluble in water.

Potassium Bitartrate [$KHC_4H_4O_6$ 188.18]
A white, crystalline powder; taste, sour.
Freely soluble in hot water; insoluble in water or ethanol.

Potassium Borohydride [KBH_4 53.94]
White crystals; stable in the air.
Freely soluble in water.

Potassium Bromate [$KBrO_3$ 167.00]
White crystals or powder.

Soluble in water; insoluble in ethanol.

Potassium Bromide [KBr 119.00]
A white crystalline powder.
Soluble in water, boiling ethanol or glycerin; slightly soluble in ethanol.

Potassium Carbonate [$K_2CO_3 \cdot 1\frac{1}{2}H_2O$ 165.23]
White crystals or granules.
Soluble in water; insoluble in ethanol.

Potassium Carbonate Anhydrous [K_2CO_3 138.21]
White crystals or powder; hygroscopic.
Soluble in water; insoluble in ethanol.

Potassium Chlorate [$KClO_3$ 122.55]
White, transparent crystals or a powder.
Freely soluble in boiling water; soluble in water or glycer in; practically insoluble in ethanol.

Potassium Chloride [KCl 74.55]
White crystals or a crystalline powder.
Freely soluble in water or glycerin; slightly soluble in ethanol; insoluble in acetone or ether.

Potassium Chromate [K_2CrO_4 194.19]
Pale yellow crystals.
Soluble in water; insoluble in ethanol.

Potassium Cyanide [KCN 65.12]
White granules or clinkers.
Soluble in water; slightly soluble in ethanol.

Potassium Dichromate [K_2Cr_2O 294.18]
Lustrous orange-red crystals; taste, bitter; strongly oxidative.
Soluble in water; insoluble in ethanol.

Potassium dihydrogen Phosphate [KH_2PO_4 136.09]
White crystals or a crystalline powder.
Soluble in water; insoluble in ethanol.

Potassium Ferricyanide [$K_3Fe(CN)_2$ 329.25]
Red crystals; decompose easily on exposure to light, air and acid.
Soluble in water; slightly soluble in ethanol.

Potassium Ferrocyanide [$K_4Fe(CN)_6 \cdot 3H_2O$ 422.39]
Yellow crystals or granules. Its aqueous solution readily deteriorates.
Soluble in water; insoluble in ethanol.

Potassium Fluoride [KF 58.10]
White crystals; hygroscopic.
Freely soluble in water; soluble in hydrofluoric acid or ammonia solution; insoluble in ethanol.

Potassium hydroxide [KOH 56.11]
White granules or sticks; absorbs carbon dioxide easily to form potassium carbonate; hygroscopic.
Soluble in water or ethanol.

Potassium Iodate [KIO_3 214.00]
White crystals or a crystalline powder.
Soluble in water or dilute sulfuric acid; insoluble in ethanol.

Potassium Iodide [KI 166.00]
White crystals or powder.
Soluble in water, ethanol, acetone or glycerin; insoluble in ether.

Potassium Nitrate [KNO_3 101.10]
White crystals or powder; burns and detonates when in contact, rubbed or bumped with organic substances.
Soluble in water; slightly soluble in ethanol.

Potassium Periodate [KIO_4 230.00]
A white, crystalline powder.
Soluble in hot water; slightly soluble in water.

Potassium Permanganate [$KMnO_4$ 158.03]
Dark purple crystals with metallic luster; strong oxidant; decomposes in ethanol, concentrated acids or other organic solvents with liberation of oxygen.
Soluble in water.

Potassium Sodium Tartrate [$KNaC_4H_4O_4 \cdot 4H_2O$ 282.22]
White, transparent crystals or a crystalline powder.
Soluble in water; insoluble in ethanol.

Potassium Sulfate [K_2SO_4 174.26]
White crystals or a crystalline powder.
Soluble in water or glycerin; insoluble in ethanol.

Potassium Tetrahydroborate [KBH_4 53.94]
A white crystal. Stable in air.
Easily soluble in water.

Potassium Tetroxalate (Potassium trihydrogen oxalate) [$KH_3(C_2O_4)_2 \cdot 2H_2O$ 254.19]
White crystals or a crystalline powder.
Soluble in water; slightly soluble in ethanol.

Potassium Thiocyanate [KSCN 97.18]
White crystals.
Soluble in water or ethanol.

Potato Starch [$(C_6H_{10}O_5)_n$]
A white, amorphous powder; odourless; tasteless; highly hygroscopic.
Insoluble in water and ethanol, forms slightly blue collosol in hot water.

Propanol [$CH_3CH_2CH_2OH$ 60.10]
A clear, colourless liquid; inflammable.
Miscible with water, ethanol or ether.
Boiling point: 97.2℃.

Propylene Glycol [$CH_3CH(OH)CH_2OH$ 76.10]
A colourless, viscous liquid; taste, slightly acrid.
Miscible with water, acetone or chloroform.

Protocatechuic Acid [$C_7H_6O_4$ 154.12]
White or faintly brown crystals; discoloured on exposure to air.
Soluble in ethanol or ether, slightly soluble in water.

Pyridine [C_5H_5N 79.10]
A colourless, clear liquid; odour, disagreeable; taste, peppery; hygroscopic; inflammable.
Miscible with water, ethanol, ether or petroleum banzin.

Pyridine Dehydrated [C_5H_5N 79.10]
To 200 ml of pyridine reagent add 40 ml of benzene, mix well and distil on a sand bath. Collect the distillate at 115-116℃.

Pyrogallol [$C_6H_3(OH)_3$ 126.11]
White lustrous crystals.
Soluble in water, ethanol or ether; slightly soluble in chloroform, benzene or carbon disulfide.

Radix Arnebiae
See the monograph.

Radix Lithospermi
See the monograph.

Red Mercuric Iodide [HgI_2 454.40]
A bright red powder; heavy; odourless.
Soluble in ether, sodium thiosulfate solution or potassium iodide solution; Slightly soluble in dehydrated ethanol; insoluble in water.

Resazurin [$C_{12}H_7NO_4$ 229.19]
Deep red crystals with green lustre.

Soluble in dilute sodium hydroxide solution; slightly soluble in ethanol or glacial acetic acid; insoluble in water or ether.

Resorcinol [$C_6H_4(OH)_2$ 110.11]
White transparent crystals; turns to pale red on exposure to light, air or in contact with iron.
Soluble in water, ethanol or ether.

Rhodamine B [$C_{28}H_{31}ClN_2O_3$ 479.02]
Green lustrous crystals or a reddish-violet powder.
Freely soluble in water with a bluish-red colour; its diluted solution is strongly fluorescent; freely soluble in ethanol; slightly soluble in hydrochloric acid or sodium hydroxide solution.

Ruthenium Red [$Ru_2(OH)_2Cl_4 \cdot 7NH_3 \cdot 3H_2O$ 551.23] or [$(NH_3)_5RuO\text{-}Ru(NH_3)_4\text{-}O\text{-}Ru(NH_3)_5Cl_6$ 786.35]
A brownish-red powder.
Soluble in water, insoluble in ethanol and glycein.

Silica Gel [$mSiO_2 \cdot nH_2O$]
A white, translucent, or milky white granules or pellets; hygroscopic; usually contains about 3%-7% of water; moisture absorbing capacity about 40%.

Silica Powder
Colourless, transparent crystals or an amorphous powder.
Soluble in an excess of hydrofluoric acid; insoluble in water or acid.

Silicon Dioxide [SiO_2 60.08]
A colourless transparent crystal or powder.
Soluble in excessive hydrofluoric acid, practically in soluble in water or acids.

Silicotungstic Acid [$SiO_2 \cdot 12WO_3 \cdot 26H_2O$ 3310.66]
White or pale yellow crystals; hygroscopic.
Freely soluble in water or ethanol.

Silver Diethyldithiocarbamate [$(C_2H_5)_2NCS_2Ag$ 256.14]
Pale yellow crystals.
Freely soluble in pyridine; soluble in chloroform; insoluble in water, ethanol, acetone or benzene.

Silver Nitrate [$AgNO_3$ 169.87]
White, transparent, flaky crystals.
Freely soluble in ammonia solution; soluble in water or ethanol; slightly soluble in ether or glycerin.

Silver Oxide [Ag_2O 231.74]
A brownish-black powder; heavy; slowly decomposes on exposure to light; inflammable.
Freely soluble in dilute nitric acid or ammonia solution; practically insoluble in water or ethanol.

Soda Lime
A mixture of sodium hydroxide and calcium oxide, pink small granules with the addition of special indicator; the colour fades gradually on absorption of carbon dioxide.

Sodium Acetate [$NaC_2H_3O_2 \cdot 3H_2O$ 136.08]
White transparent crystals or white granules; efflorescent.
Soluble in water.

Sodium Acetate, Anhydrous [$NaC_2H_3O_2$ 82.03]
A white powder; hygroscopic.
Freely soluble in water; soluble in ethanol.

Sodium Alizarinsulfonate [$C_{14}H_7NaO_7S \cdot H_2O$ 360.28]
An orange or yellowish-brown powder.
Freely soluble in water; slightly soluble in ethanol; insoluble in chloroform or benzene.

Sodium Bicarbonate [$NaHCO_3$ 84.01]
A white crystalline powder.
Soluble in water; insoluble in ethanol.

Sodium Bisulfite [$NaHSO_3$ 104.06]
A white crystalline powder; odour resembling sulfur dioxide; oxidized to form sulfate on exposure to air.
Soluble in water; slightly soluble in ethanol.

Sodium Bitartrate [$NaHC_4H_4O_6 \cdot 2H_2O$ 190.09]
A white, crystalline powder.
Soluble in water; insoluble in ethanol.

Sodium Borohydride [$NaBH_4$ 37.83]
A white crystalline powder; hygroscopic.
Soluble in water, ammonia solution, ethylenediamine or pyridine; insoluble in ether.

Sodium Bromide [NaBr 102.89]
White crystals or a powder.
Soluble in water; slightly soluble in ethanol.

Sodium Carbonate [$Na_2CO_3 \cdot 10H_2O$ 286.14]
White transparent crystals.
Soluble in water or glycerin; insoluble in ethanol.

Sodium Carbonate, Anhydrous [Na_2CO_3 105.99]
White crystals or granules; absorbs one mol of water on exposure to air.
Soluble in water; to produce strongly alkaline solution; insoluble in ethanol.

Sodium Carbonate, Monohydrate [$Na_2CO_3H_2O$ 124.00]
White prismatic crystals; hygroscopic; loses water of crystallization at 100℃.
Freely soluble in water; insolube in ethanol.

Sodium Carboxymethylcellulose
A white powder or small granules; hygroscopic; easily disperses and swells in hot water; the viscosity of a 1% solution is 0.005-2.0 Pa·s.

Sodium Chloride [NaCl 58.44]
White crystals or a crystalline powder; hygroscopic.
Soluble in water and in glycerin; very slightly soluble in ethanol or hydrochloric acid.

Sodium Chromotropate [$C_{10}H_6Na_2O_8S_2 \cdot 2H_2O$ 400.29]
A white or grey powder.
Soluble in water with a pale brown colour.

Sodium Citrate [$C_6H_5Na_3O_7 \cdot 2H_2O$ 294.10]
White crystals or a powder.
Freely soluble in water; insoluble in ethanol.

Sodium Cobaltinitrite [$Na_3Co(NO_2)_6$ 403.94]
A yellow or yellowish-brown crystalline powder; readily decomposes.
Very soluble in water; slightly soluble in ethanol.

Sodium Dihydrogen Phosphate [$NaH_2PO_4 \cdot H_2O$ 137.99]
White crystals or granules.
Freely soluble in water; practically insoluble in ethanol.

Sodium Diphenylamine Sulfonate [$C_6H_5NHC_6H_4SO_3Na$ 271.27]
A colourless or white crystalline powder.
Soluble in water or hot ethanol; insoluble in ether, benzene, toluene or carbon disulfide.

Sodium Fluoride [NaF 41.99]
A white powder or cubic crystals.
Soluble in water; its aqueous solution is corrosive to glass; insoluble in ethanol.

Sodium formate [$HCOONa \cdot 2H_2O$ 104.04]
White crystals; odour, faint formic acid; hygroscopic.
Soluble in water or glycerin; slightly soluble in ethanol.

Sodium Hydrosulfite [$Na_2S_2O_4$ 174.11]
A white or almost white powder; odour, characteristic; hygroscopic; decomposes and burns on exposure to air or heat.
Freely soluble in water; insoluble in ethanol.

Sodium Hydroxide [NaOH 40.00]
White granules or flakes; easily absorbs carbon dioxide and water; hygroscopic.
Freely soluble in water, ethanol or glycerin.

Sodium Hypochlorite Solution [NaOCl 74.44]
A clear, pale yellowish-green liquid; corrosive; strongly oxidative and alkaline.
Miscible with water.

Sodium Iodide [NaI 149.89]
White crystals or a powder.
Soluble in water, ethanol or glycerin.

Sodium Molybdate [$Na_2MoO_4 \cdot 2H_2O$ 241.95]
A white crystalline powder; loses water of crystallization at 100℃.
Soluble in water.

Sodium β-Naphthalenesulfonate [$C_{10}H_7NaO_3S$ 230.22]
White crystals or powder.
Soluble in water; insoluble in ethanol.

Sodium Nitrate [$NaNO_3$ 84.99]
Colourless, transparent crystals or white granules; burns and detonates in contact, rubbed or bumped with organic substances.
Soluble in water; slightly soluble in ethanol.

Sodium Nitrite [$NaNO_2$ 69.00]
White or pale yellow crystals or granules; hygroscopic; burns and detonates in contact with organic matter, evolving noxious and irritant gas of nitrogen oxide and nitrogen peroxide.
Soluble in water; slightly soluble in ethanol or ether.

Sodium Nitroprusside [$Na_2Fe(NO)(CN)_5 \cdot 2H_2O$ 297.95]
Transparent, dark red crystals; its aqueous solution decomposes gradually and turns to green colour.
Soluble in water; slightly soluble in ethanol.

Sodium Oxalate [$Na_2C_2O_4$ 134.00]
A white crystalline powder.
Soluble in water; insoluble in ethanol.

Sodium Periodate [$NaIO_4$ 213.89]
A white, crystalline powder.
Soluble in water, hydrochloric acid, nitric acid, sulfuric acid or acetic acid; insoluble in ethanol.

Sodium Pyrosulfite [$Na_2S_2O_5$ 190.11]
White crystals or a powder with slight odour of sulfur dioxide; hygroscopic.
Soluble in water or glycerin; slightly soluble in ethanol.

Sodium Sulfate Anhydrous [Na_2SO_4 142.04]
A white crystalline powder; hygroscopic.
Soluble in water; insoluble in ethanol.

Sodium Sulfide [$Na_2S \cdot 9H_2O$ 240.18]
White crystals; its aqueous solution is alkaline.
Soluble in water; Slightly soluble in ethanol; insoluble in ether.

Sodium Sulfite [$Na_2SO_3 \cdot 7H_2O$ 252.15]
White, transparent crystals; odour, resembling sulfurous acid; efflorescent; oxidized to form sodium sulfate on exposure to air.
Soluble in water; very slightly soluble in ethanol.

Sodium Sulfite, Anhydrous [Na_2SO_3 126.04]
White small crystals or powder.
Soluble in water and glycerin; very slightly soluble in ethanol.

Sodium Tetraphenylborate [$(C_6H_5)_4BNa$ 342.22]
White crystals; odourless.
Freely soluble in water, methanol, dehydrated ethanol or acetone.

Sodium Thioglycollate [$CH_2(SH)COONa$ 114.10]
White crystals; odour, slight; hygroscopic.
Freely soluble in water; slightly soluble in ethanol.

Sodium Thiosulfate [$Na_2S_2O_3 \cdot 5H_2O$ 248.19]
Colourless, transparent crystals or white granules.
Soluble in water with endothermic reaction; slightly soluble in ethanol.

Sodium Tungstate [$Na_2WO_4 \cdot 2H_2O$ 329.86]
A white crystalline powder; efflorescent.
Soluble in water; insoluble in ethanol.

Soluble Starch
A white powder; odourless; tasteless.
Soluble in boiling water; insoluble in water, ethanol or ether.

Solvent Blue 19
It is a mixture of 1-amino-4-anilinoanthraquinone and 1-methylamino-4-anilinoanthraquinone.

Stannous Chloride [$SnCl_2 \cdot 2H_2O$ 225.65]
White crystals.
Soluble in water, ethanol or sodium hydroxide solution.

Strontium Hydroxide [$Sr(OH)_2 \cdot 8H_2O$ 265.76]
Colourless or white crystals; deliquescent; absorbs carbon dioxide from air to form carbonate. It loses seven molecules of water in dry air.
Soluble in hot water or acid; slightly soluble in water.

Succinic Acid [$H_2C_4H_4O_4$ 118.09]
White crystals.
Soluble in hot water; slightly soluble in ethanol, acetone or ether; insoluble in benzene, carbon disulfide, carbon tetrachloride or petroleum benzin.

Sucrose [$C_{12}H_{22}O_{11}$ 342.30]
Colourless crystals or white crystalline, loose powder; odourless; taste, sweet.
Very soluble in water; slightly soluble in ethanol; insoluble in chloroform or ether.

Sudan Ⅲ [$C_6H_5NNC_6H_4N:NC_{10}H_6OH$ 352.40]
A reddish brown powder.
Soluble in chloroform or glacial acetic acid; slightly soluble in ethanol; insoluble in water.

Sulfanilic Acid [$C_6H_7NO_3S$ 173.19]
A white or almost white powder, discoloured on exposure to light.
Freely soluble in concentrated solution of ammonia, sodium hydroxide or sodium carbonate; soluble in hot water; slightly soluble in water.

Sulfur [S 32.06]
Sorts of allotrope of sulfur, yellow fine powder; combustible.
Soluble in benzene, toluene, carbon tetrachloride or carbon disulfide; slightly soluble in ethanol or ether; insoluble in water.

Sulfuric Acid [H_2SO_4 98.08]
A clear, colourless, viscous liquid; generates much heat when mixed with water or alcohol. it contains 95%-98% (g/g) of H_2SO_4.
Miscible with water or ethanol.
Relative density: about 1.84.

Sulfuric Acid, Nitrogen Free
Introduce sulfuric acid to a porcelain evaporating dish heat on a sand bath until the vapor of sulfur trioxide is evolved (about 2 hours), then allow to cool in an empty desiccator.

Sulfurous Acid [H_2SO_3 82.07]
A colourless transparent liquid; asphyxiating odour of sulfur

dioxide; unstable, easily decomposed.
Miscible with water.

Talcum Powder
Complies with the requirements prescribed in monograph of the Chinese Pharmacopoeia.

Tannic Acid [$C_{76}H_{52}O_{46}$ 1701.22]
A pale yellow or pale brown loose powder; odour, characteristic; gradually darkens on exposure to air or light.
Soluble in water or ethanol.

Tartaric Acid [$H_2C_4H_4O_6$ 150.09]
White, transparent crystals or a white crystalline powder.
Soluble in water, methanol, ethanol, propanol or glycerin; slightly soluble in ether; insoluble in chloroform.

Tertiary Butanol [$(CH_3)_3COH$ 74.12]
White crystals; it is a liquid when containing a little of water; odour, camphor-like; hygroscopic; inflammable.
Miscible with ethanol or ether; soluble in water.
Boiling Point: 82.4℃.

Tetrabutylammonium Iodide [$(C_4H_9)_4NI$ 369.37]
A white or pale yellow powder.
Freely soluble in ethanol; soluble in water; slightly soluble in chloroform.

Tetraethylammonium Hydroxide [$C_8H_{21}NO$ 147.26]
The free base only exists in solution or as a hydrate. Usually it is used as a solution of 10%, 25% or 60%. The aqueous solution is colourless, strongly corrosive; very strongly alkaline; freely absorbs carbon dioxide from air.

Tetrahydrofuran [C_4H_8O 72.11]
A colourless liquid; odour, ether-like; inflammable; easily forms peroxide during storage.
Miscible with water, ethanol, acetone or ether.
Boiling Point: 66℃.

Tetrazolium Blue [$C_{40}H_{32}Cl_2N_8O_2$ 727.65]
Colourless or yellow crystals.
Freely soluble in methanol, ethanol or chloroform; slightly soluble in water.

Thioacetamide [CH_3CSNH_2 75.13]
Colourless or white flaky crystals.
Soluble in water, ethanol or benzene; slightly soluble in ether.

Thiourea [NH_2CSNH_2 76.12]
White rhombic crystals or needle crystals; taste, bitter.
Soluble in water or ethanol; slightly soluble in ether.

Thymol [$C_{10}H_{14}O$ 150.22]
White crystals.
Very slightly soluble in water.

Thymol Blue [$C_{27}H_{30}O_5S$ 466.60]
A brownish-green crystalline powder.
Soluble in ethanol; insoluble in water.

Thymolphthalein [$C_{28}H_{30}O_4$ 430.54]
A white powder.
Soluble in ethanol; insoluble in water.

Toluene [$C_6H_5CH_3$ 92.14]
A clear, colourless liquid; odour, benzene-like; inflammable.
Miscible with ethanol or ether.
Boiling Point: 110.6℃.

***p*-Toluenesulfonic Acid** [$CH_3C_6H_4SO_3H \cdot H_2O$ 190.22]
White crystals.
Freely soluble in water; soluble in ethanol or ether.

Toluidine blue [$C_{15}H_{16}ClN_3S$ 305.83]
A dark green powder, with bronze lustre.
Freely soluble in water; slightly soluble in ethanol; very slightly soluble in chloroform; practically insoluble in ether.

Tragacanth
a white or pale yellow powder; odourless. Soluble in alkaline solution and hydrogen peroxide solution; insoluble in ethanol.

Trichloroacetic Acid [CCl_3COOH 163.39]
Colourless crystals; odour, characteristic; hygroscopic; corrosive; its aqueous solution is strongly acidic.
Freely soluble in ethanol or ether; soluble in water.

Triethanolamine [$N(CH_2CH_2OH)_3$ 149.19]
A colourless or pale yellow, viscous liquid. Turns to brown on standing for a long time; absorbs water and carbon dioxide on exposure to air; it is strongly alkaline.
Miscible with water or ethanol.

Triethylamine [$(C_2H_5)_3N$ 101.19]
A colourless liquid; odour, strongly ammoniacal.
Miscible with ethanol or ether; slightly soluble in water.
Boiling point: 89.05℃.

Trifluoroacetic Acid [CF_3COOH 114.02]
A colourless, fuming liquid; hygroscopic; strongly corrosive.
Freely soluble in water, ethanol, acetone or ether.

Trinitrophenol [$C_6H_3N_3O_7$ 229.11]
Pale yellow crystals; odourless; taste, bitter; violet explosion occurs at high temperature or when bumped or rubbed. Soluble in hot water, ethanol or benzene.

Trypsin
A white, almost white or pale yellow powder.
Soluble in water; insoluble in ethanol.

Tyrosine [$C_9H_{11}NO_3$ 181.19]
White crystals.
Soluble in water; insoluble in ethanol or ether.

Uranyl Acetate [$UO_2(C_2H_3O_2)_2 \cdot 2H_2O$ 424.15]
A yellow crystalline powder.
Soluble in water; slightly soluble in ethanol.

Urea [NH_2CONH_2 60.06]
White crystal or a powder; odour, ammoniacal.
Soluble in water, ethanol or benzene; practically insoluble in chloroform or ether.

Vanillin [$CH_3O \cdot C_6H_3(OH)CHO$ 152.15]
White crystals; odour, fragrant.
Freely soluble in ethanol, chloroform, ether, glacial acetic acid or pyridine soluble in oil or sodium hydroxide solution.

Xylene [$C_6H_4(CH_3)_2$ 106.17]
A clear, colourless liquid; odour, characteristic; inflammable.
It is a mixture of the three isomers *o*-, *m*-and *p*-xylene.
Miscible with ethanol, chloroform or ether; insoluble in water.
Boiling point: 137-140℃.

Xylene Cyanol Blue FF [$C_{25}H_{27}N_2NaO_6S_2$ 528.62]
A brown or bluish-black powder.
Freely soluble in ethanol; soluble in water.

Xylenol Orange [$C_{31}H_{28}N_2Na_4O_{13}S$ 760.59]
A reddish-brown crystalline powder; hygroscopic.
Freely soluble in water; insoluble in ethanol.

Yeast Extract
A reddish-yellow to brown powder; odour, characteristic, but no rancid smell.
Soluble in water to yield a weak acidic reaction.
Choloride Not more than 5%, calculated as NaCl.
Nitrogen 7.2%-9.5%, calculated on the dried basis.
Loss on drying Not more than 5.0%.
Residue on ignition Not more than 15%.
Coagulable Protein No sediment is produced when its

aqueous solution (1→20) is filtered and boiled.

Zinc [Zn 65.39]
Greyish-white granules with metallic lustre.
Soluble in dilute acid with liberation of hydrogen; soluble slowly in ammonia solution or sodium hydroxide solution.

Zinc Acetate [$Zn(C_2H_3O_2)_2 \cdot 2H_2O$ 219.51]
White crystals.
Freely soluble in water or boiling ethanol; slightly soluble in ethanol.

Zinc Chloride [ZnCl 136.30]
A white crystalline powder or clinkers.
Freely soluble in water; soluble in ethanol, acetone or ether.

Zincon [$C_{20}H_{15}N_4NaO_6S$ 462.42]
A brown, crystalline powder.
Soluble in ethanol or sodium hydroxide solution; insoluble in water.

Zinc Oxide [ZnO 81.39]
A white or pale yellow powder.
Soluble in dilute acid, concentrated alkali solution or ammonia solution; insoluble in water or ethanol.

Zinc Sulfate [$ZnSO_4 \cdot 7H_2O$ 287.56]
White crystals, granules or powder.
Freely soluble in water; soluble in glycerin; Slightly soluble in ethanol.

Zirconium Nitrate [$Zr(NO_3)_4 \cdot 5H_2O$ 429.32]
White crystals; hygroscopic; decomposes at 100℃.
Freely soluble in water; soluble in ethanol.

XV B Test Solutions

Acetic Acid, Dilute
Dilute 60 ml of glacial acetic acid with water to 1000 ml.

Acid Stannous Chloride TS
Dissolve 20 g of stannous chloride in hydrochloric acid to make 50 ml and filter.
The solution should be used within three months.

Alcoholic Ammonia TS
Add concentrated ammonia solution to dehydrated ethanol. It contains 9-11 g of NH_3 per 100 ml.
Preserve in rubber stoppered bottle.

Alcoholic Dinitrophenylhydrazine TS
Dissolve 1 g of dintrophenylhydrazine in 1000 ml of ethanol add 10 ml of hydrochloric acid slowly and mix well.

Alcoholic Mercuric Bromide TS
Dissolve 2.5 g of mercuric bromide in 50 ml of ethanol by gentle heat.
Preserve in glass-stoppered bottle, protected from light.

Alcoholic Potassium Hydroxide TS
Use alcoholic potassium hydroxide (0.5 mol/L) VS.

Alcoholic Silver Nitrate TS
Dissolve 4 g of silver nitrate in 10 ml of water, dilute with ethanol to 100 ml.

Alcoholic Sodium Nitrite TS
Dissolve 5 g of sodium nitrite in 60% solution of ethanol to make 1000 ml.

* **Alcoholic sulfuric Acid TS**
Add 57 ml of sulfuric acid in ethanol to make 1000 ml. It contains 9.5%-10.5% (g/ml) of H_2SO_4.

Alkaline Cupric Tartrate TS
(1) Dissolve 6.93 g of crystalline cupric sulfate in water to make 100 ml.
(2) Dissolve 34.6 g of crystalline potassium sodium tartrate and 10 g of sodium hydroxide in water to make 100 ml.
Mix solution (1) with solution (2) before use.

Alkaline Hydroxylamine TS
(1) Dissolve 12.5 g of sodium hydroxide in dehydrated methanol to make 100 ml.
(2) Add 100 ml of dehydrated methanol to 12.5 g of hydroxylamine hydrochloride and heat under reflux to dissolve.
Mix equal parts of the two solutions and filter before use.
This solution should be freshly prepared and use within hours.

Alkaline Mercuric Potassium Iodide TS
Dissove 10 g of potassium iodide in 10 ml of water, add slowly with stirring a saturated solution of mercuric chloride until a red precipitate remains undissolved. Add 30 g of potassium hydroxide and allow to dissolve, then add 1 ml or more of the saturated solution of mercuric chloride. Dilute with water to 200 ml. Allow the precipitate to settle and use the supernatant liquid.
Add 2 ml of this solution to 50 ml of water which contains 0.05 mg of ammonia, a yellowish-brown colour is formed immediately.

Alkaline β-Naphthol TS
Dissolve 0.25 g of β-naphthol in 10 ml of sodium hydroxide solution (1→10). This solution should be freshly prepared.

Alkaline Trinitrophenol TS
To 20 ml of 1% trinitrophenol solution add 10 ml of 5% sodium hydroxide solution, dilute with water to 100 ml.
This solution must be freshly prepared.

Aluminium Chloride TS
Dissolve 1 g of aluminium chloride in ethanol to make 100 ml.

Ammonia TS
Dilute 400 ml of concentrated ammonia solution with water to make 1000 ml.

Ammonia Concentrated TS
Use concentrated ammonia solution directly.

Ammoniated Cupric Chloride TS
Dissolve 22.5 g of cupric chloride in 200 ml of water, add 100 ml of concentrated ammonia TS and mix well.

Ammoniated Silver Nitrate TS
Dissolve 1 g of silver nitrate in 20 ml of water, add ammonia TS dropwise with stirring until the precipitate is almost completely dissolved, filter.
Preserve the solution in amber coloured glass bottle, protected from light.

Ammonium Acetate TS
Dissolve 10 g of ammonium acetate in water to make 100 ml.

Ammonium Carbonate TS
Dissolve 20 g of ammonium carbonate with 20 ml of ammonia TS in water to make 100 ml.

Ammonium Chloride TS
Dissolve 10.5 g of ammonium chloride in water to make 100 ml.

Ammonium Magnesium Chloride TS
Dissolve 5.5 g of magnesium chloride and 7 g of ammonium chloride in 65 ml of water and then add 35 ml of ammonia TS. Allow to stand in glass bottle for several days, filter.
The solution should be filtered, if turbidity occurs.

Ammonium Mercuric Thiocyanate TS

Dissolve 5 g of ammonium thiocyanate and 4.5 g of mercuric chloride in water to make 100 ml.

Ammonium Molybdate TS
Dissolve 10 g of ammonium molybdate in water to make 100 ml.

Ammonium Molybdate in Sulfuric Acid TS
Dissolve 0.1 g of ammonium molybdate in 10 ml of sulfuric acid.

Ammonium Molybdate-Sulfuric Acid TS
Dissolve 2.5 g of ammonium molybdate in a mixture of 15 ml of sulfuric acid and water to make 100 ml.
This solution should be used within two weeks.

Ammonium Oxalate
Dissolve 3.5 g of ammonium oxalate in water to make 100 ml.

Ammonium Sulfide TS
To a solution of 60 ml of ammonia TS saturated with hydrogen sulfide add 40 ml of ammonia TS.
Preserve in amber coloured glass bottle, protected from light.
This solution is unsuitable for use if a copious precipitate of sulfur is present.

Ammonium Thiocyanate TS
Dissolve 8 g of ammonium thiocyanate in water to make 100 ml.

Anisaldehyde TS
Dissolve 0.5 ml of Anisaldehyde in 50 ml of acetic acid, add 1 ml of sulfuric acid and mix well.
This solution should be freshly prepared.

Antimony Trichloride TS
Use the saturated chloroform solution of antimony trichloride.

Arnebia TS
Extract 10 g of coarse powder of arnebia with 100 ml of 90% ethanol for 24 hours and filter. Add equal volume of glycerin to the filtrate, mix, allow to stand for 2 hours and filter.
Preserve in amber-coloured glass bottle. Use within 2 months.

Auric Chloride TS
Dissolve 1 g of auric chloride in 35 ml of water.

Barium Chloride TS
Dissolve 5 g of fine powder of barium chloride in water to make 100 ml.

Barium Hydroxide TS
Dissolve barium hydroxide in freshly boiled and cooled water to make a saturated solution.
This solution should be freshly prepared.

Barium Nitrate TS
Dissolve 6.5 g of barium nitrate in water to make 100 ml.

Boric Acid TS
Use the saturated acetone solution of boric acid.

Bromine TS
To 2-3 ml of bromine in a glass bottle which is stoppered and lubricated with vaseline add 100 ml of water to make a saturated solution by shaking.
This solution should be protected from light.

Bromine-Potassium Bromide TS
Dissolve 30 g of bromine and 30 g of potassium bromide in water to make 100 ml.

Calcium Chloride TS
Dissolve 7.5 g of calcium chloride in water to make 100 ml.

Calcium Hydroxide TS
To 1000 ml of water in a stoppered glass bottle, add 3 g of calcium hydroxide, allow to stand for 1 hour with frequent shaking vigorously, use the supernatant liquid as the test solution.

Calcium Sulfate TS
Use the saturated solution of calcium sulfate directly.

Chloral Hydrate TS
Dissolve 50 g of chloral hydrate in a mixture of 15 ml of water and 10 ml of glycerin.

Chlorine TS
Use the saturated solution of chlorine in water.
This solution should be freshly prepared.

Chromic Nitrate TS
(1) Add 10 ml of nitric acid to 100 ml of water and mix well.
(2) Dissolve 10 g of chromium trioxide in 100 ml of water.
Mix equal volume of the two solutions before use.

Chromotropic Acid TS
Dissolve 50 mg of sodium chromotropate in 100 ml of a cold mixture of sulfuric acid and water (9 : 4).
This solution should be freshly prepared before use.

Cupric Acetate TS
Dissolve 0.1 g of cupric acetate in 5 ml of water which contains a few drops of acetic acid. Dilute with water to 100 ml and filter.

Cupric Acetate Concentrated TS
Dissolve 13.3 g of cupric acetate in a mixture of 195 ml of water and 5 ml of acetic acid.

Cupric Sulfate TS
Dissolve 12.5 g of Cupric sulfate in water to make 100 ml.

Diazotized Sulfanilic Acid TS
Dissolve 0.1 g of sulfanilic acid in 2 ml of 10% sodium hydroxide, add 20 ml of dilute hydrochloric acid and 6 ml of 0.1 mol/L sodium nitrite, stir for 1 minute, add 50 mg of urea, stir for another 5 minutes.
This solution should be freshly prepared.

Diazotized *p*-Nitroaniline TS
Dissolve 0.4 g of *p*-nitroaniline in a mixture of 20 ml of dilute hydrochloric acid and 40 ml of water, cool to 15℃ and add 10% solution of sodium nitrite until 1 drop of the solution imparts a blue colour to starch-iodide TP.
This solution should be freshly prepared.

2,6-Dichloroquinone-Chlorimide TS
Dissolve 1 g of 2,6-dichloroquinone-chlorimide in 200 ml of ethanol.

***p*-Dimethylaminobenzaldehyde TS**
Dissolve 0.125 g of *p*-dimethylaminobenzaldehyde in a cooled mixture of 65 ml of nitrogen-free sulfuric acid and 35 ml of water, add 0.05 ml of ferric chloride TS and mix well.
This solution should be used within 7 days.

Dimethylglyoxime TS
Dissolve 1 g of 2,3-dimethylglyoxime in 100 ml of ethanol.

Dinitrobenzene TS
Dissolve 2 g of *m*-dinitrobenzene in ethanol to make 100 ml.

Dinitrobenzoic Acid TS
Dissolve 1 g of 3,5-dinitrobenzoic acid in ethanol to make 100 ml.

Dinitrophenylhydrazine TS
Dissolve 1.5 g of 2,4-dinitrophenylhydrazine in 20 ml of sulfuric acid solution (1→2), dilute with water to 100 ml and filter.

Disodium Hydrogen Phosphate TS

Dissolve 12 g of crystalline disodium hydrogen phosphate in water to make 100 ml.

Ethanol, Dilute TS
Dilute 529 ml of ethanol with water to 1000 ml.
It contains 49.5%-50.5% (ml/ml) of C_2H_5OH at 20℃.

Ferric Chloride TS
Dissolve 9 g of ferric chloride in water to make 100 ml.

Ferric Perchlorate TS
Heat 0.8 g of iron powder with 10 ml of 70% perchloric acid solution slowly to dissolve. Cool and dilute with dehydrated ethanol to 100 ml.
Add 6 ml of 70% perchloric acid solution to 20 ml of the solution, dilute with dehydrated ethanol to 500 ml before use.

Ferrous sulfate TS
Dissolve 8 g of ferrous sulfate crystals in 100 ml of freshly boiled and cooled water.
This solution should be freshly prepared.

Folin TS
Heat under reflux 10 g of sodium tungstate, 2.5 g of sodium molybdate, 70 ml of water, 5 ml of 85% phosphoric acid solution and 10 ml of hydrochloric acid in a 200 ml flask gently for about 10 hours, cool, add 15 g of lithium sulfate, 5 ml of water and 1 drop of bromine. Boil the mixture for about 15 minutes, or until the excess bromine is expelled. Cool, dilute with water to 100 ml and filter. The filtrate is kept in amber coloured glass bottle in a refrigerator.
Dilute 2.5 ml of the stock solution with water to 10 ml before use, shake thoroughly.

Formaldehyde TS
Use "Formaldehyde Solution" directly.

Fuchsin-Sulfurous Acid TS
Dissolve 0.2 g of fuchsin basic in 100 ml of hot water, add 20 ml of sodium sulfite solution (1 → 10), 2 ml of hydrochloric acid and dilute with water to 200 ml, then add 0.1 g of activated carbon, stir and filter promptly. Allow to stand for at least 1 hour.
This solution should be freshly prepared.

Furfural TS
Dilute 1 ml of furfural with water to 100 ml.
This solution should be freshly prepared.

Glycerin Dilute TS
Dilute 33 ml of glycerin with water to 100 ml. Add a small piece of camphor or a drop of liquefied phenol.

Glycerin-acetic Acid TS
Mix 1 volume of glycerin, 1 volume of 50% acetic acid and 1 volume of water.

Glycerin-ethanol TS
Mix 1 volume of glycerin and 1 volume of dilute ethonal.

Hydrochloric Acid Dilute TS
Dilute 234 ml of hydrochloric acid with water to 1000 ml.
It contains 9.5%-10.5% of HCl.

Hydrogen Peroxide TS
Dilute 30% hydrogen peroxide solution with water to a 3% solution.

Hydrogen Sulfide TS
Use the saturated solution of hydrogen sulfide.
Preserve in amber coloured glass bottle and protected from the light. It is unsuitable to be used if it does not possess an odour of H_2S, or if it does not produce a copious precipitate of sulfur when added to an equal volume of ferric chloride TS.

Hydroxylamine Hydrochloride TS
Dissolve 3.5 g of hydroxylamine hydrochloride in 60% ethanol to make 100 ml.

Iodine Potassium Iodide TS
Dissolve 0.5 g of iodine and 1.5 g of potassium iodide in 2.5 ml of water.

Iodine TS
Use iodine (0.1 mol/L) VS directly.

Isatin TS
Dissolve 0.1 g of isatin in 10 ml of acetone. Add 1 ml of glacial acetic acid and mix well.

*** Lanthanum TS**
Dissolve 5 g of lanthanum oxide in 25 ml of hydrochloric acid, dilute it with water to make 100 ml. Allow the solution to stand for 24 hours.

Lead Acetate TS
Dissolve 10 g of lead acetate in freshly boiled and cooled water, add acetic acid dropwise to make the solution clear, and then dilute with water to 100 ml.

Lead Subacetate TS
Add 10 ml of water to 14 g of lead monoxide, triturate until a paste is formed. Transfer it to a glass bottle with 10 ml of water, add 70 ml of a solution which contains 22 g of lead acetate, shake vigorously for 5 minutes. Allow the mixture to stand for 7 days with frequent shake, filter, add freshly boiled and cooled water to make 100 ml.

Magnesium Sulfate TS
Dissolve 12 g of magnesium sulfate crystals ($MgSO_4 \cdot 7H_2O$) in water to make 100 ml.

Mercuric Acetate TS
Dissolve 5 g of mercuric acetate, finely powdered, in warm glacial acetic acid to make 100 ml.
Preserve this solution in a well-closed amber coloured glass bottle.

Mercuric Chloride TS
Dissolve 6.5 g of mercuric chloride in water to make 100 ml.

Mercuric Nitrate TS
Dissolve 40 g of yellow mercuric oxide in a mixture of 32 ml of nitric acid and 15 ml of water.
Preserve in stoppered glass bottle and protected from light.

Mercuric Potassium Iodide TS
Dissolve 1.36 g of mercuric chloride in 60 ml of water and dissolve 5 g of potassium iodide in 10 ml of water, mix these two solutions and dilute with water to 100 ml.

Mercuric Sulfate TS
Mix 5 g of yellow mercuric oxide with 40 ml of water, add 20 ml of sulfuric acid slowly with stirring, then add another 40 ml of water and stir to dissolve completely.

Mercurous Nitrate TS
Dissolve 15 g of mercurous nitrate in a mixture of 90 ml of water and 10 ml of dilute nitric acid.
This solution should be kept in an amber coloured glass bottle with the addition of one drop of mercury.

α-Naphthol TS
Add 6.5 ml of sulfuric acid slowly to 10.5 ml of 15% alcoholic solution of α-naphthol, mix well and then add 40.5 ml of alcohol and 4 ml of water, mix well.

Ninhydrin TS
Dissolve 2 g of Ninhydrin in ethanol to make 100 ml.

Nitric Acid Dilute TS
Dilute 105 ml of nitric acid with water to 1000 ml.
It contains 9.5%-10.5% of HNO_3.

Oxalic Acid TS

Dissolve 6. 3 g of oxalic acid in water to make 100 ml.

Perchloric Acid TS
Add 500 ml of water to 13 ml of 70% perchloric acid. Adjust pH to 0. 5 with 70% perchloric acid.

Phloroglucinol TS
Dissolve 0. 5 g of phloroglucinol in ethanol to make 25 ml. Preserved in glass-stoppered bottle, protected from light.

Phosphotungstic Acid TS
Dissolve 1 g of phosphotungstic acid in water to make 100 ml.

Phosphomolybdic Acid TS
Dissolve 5 g of phosphomolybdic acid in dehydrated ethanol to make 100 ml.

Potassium Acetate TS
Dissolve 10 g of potassium acetate in water to make 100 ml.

Potassium Carbonate TS
Dissolve 7 g of anhydrous potassium carbonate in water to make 100 ml.

Potassium Chlotate TS
Use the saturated solution of potassium chlorate in nitric acid.

Potassium chromate TS
Dissolve 5 g of potassium chromate in water to make 100 ml.

Potassium Cyanide TS
Dissolve 10 g of potassium cyanide in water to make 100 ml.

Potassium Dichromate TS
Dissolve 7. 5 g of potassium dichromate in water to make 100 ml.

Potassium Ferricyanide TS
Dissolve 1 g of potassium ferricyanide in 10 ml of water. This solution should be freshly prepared.

Potassium Ferrocyanide TS
Dissolve 1 g of potassium ferrocyanide in 10 ml of water. This solution should be freshly prepared.

Potassium Ferricyanide Dilute TS
To 10 ml of 1% potassium ferricyanide solution add 0. 5 ml of 5% ferric chloride solution and 40 ml of water, shake thoroughly.

Potassium Hydroxide TS
Dissolve 6. 5 g of potassium hydroxide in water to make 100 ml.

Potassium Iodide TS
Dissolve 16. 5 g of potassium iodide in water to make 100 ml. This solution should be freshly prepared.

Potassium Iodobismuthate TS
Dissolve 0. 85 g of bismuth subnitrate in a mixture of 10 ml of glacial acetic acid and 40 ml of water, and then add 20 ml of potassium iodide solution (4→10) and mix well.

Potassium Iodoplatinate TS
Dissolve 20 mg chloroplatinic in water, add 25 ml potassium iodide solution. shake to dissolve if a precipitate is produced, then add water to 50 ml and shake thoroughly.

Potassium Iodoplatinate, Concentrated TS
Dissolve 0. 15 g of chloroplatinic acid and 3 g of potassium iodide in water to make 60 ml.

Potassium Iodobismuthate, Dilute TS
Dissolve 0. 85 g of bismuth subnitrate in a mixture of 10 ml of glacial acetic acid and 40 ml of water. Before use, add 5 ml of potassium iodide solution (4→10) and 20 ml of glacial acetic acid to 5 ml of the solution mentioned above, dilute with water to 100 ml.

Potassium Iodobismuthate, modified TS
Add 2 ml of 0. 6 mol/L hydrochloric acid solution to 1 ml of Potassium Iodobismuthate TS, and add water to 10 ml.

Potassium permanganate TS
Use potassium permanganate (0. 02 mol/L) VS directly.

Potassium Sulfate TS
Dissolve 1 g of potassium sulfate in water to make 100 ml.

Resorcinol TS
Dissolve 1 g of resorcinol in hydrochloric acid to make 100 ml.

Ruthenium Red TS
Add ruthenium red to 1-2 ml of 10% sodium acetate solution until a wine-red colour is obtained.
This solution should be freshly prepared.

Silicotungstic Acid TS
Dissolve 10 g of silicotungstic acid in water to make 100 ml.

Silver Diethyldithiocarbamate TS
To 0. 25 g of silver diethyldithiocarbamate add a suitable amount of chloroform and 1. 8 ml of triethylamine, dilute with chloroform to 100 ml and dissolve it by stirring. Allow the solution to stand overnight, and then filter with absorbent cotton wool.
Preserve in amber coloured glass bottle and store in a cool place.

Silver Nitrate TS
Use silver nitrate (0. 1 mol/L) VS directly.

Sodium Acetate TS
Dissolve 13. 6 g of crystalline sodium acetate in water to make 100 ml.

Sodium Bisulfite TS
Dissolve 10 g of sodium bisulfite in water to make 30 ml.
This solution should be freshly prepared.

Sodium Bitartrate TS
Dissolve 1 g of sodium Bitartrate in water to make 10 ml.
This solution should be freshly prepared.

Sodium Carbonate TS
Dissolve 12. 5 g of sodium carbonate monohydrate or 10. 5 g of anhydrous sodium carbonate in water to make 100 ml.

Sodium Chloride-Gelatin TS
Dissolve 1 g of gelatin and 10 g of sodium chloride in 100 ml of water by heat on a water bath at a temperature below 60℃.
This solution should be freshly prepared.

Sodium Cobaltinitrite TS
Dissolve 10 g of sodium cobaltinitrite in water to make 50 ml and filter.

Sodium Hydroxide TS
Dissolve 4. 3 g of sodium hydroxide in water to make 100 ml.

Sodium Hypobromite TS
Add 5 ml of bromine to a solution of 20 g of sodium hydroxide in 75 ml of water. Dilute with water to 100 ml and mix.
This solution should be freshly prepared.

Sodium Hypochlorite TS
Prepare a homogeneous suspension by adding 100 ml of water to 20 g of chlorinated lime and add 100 ml of 14% sodium carbonate solution with stirring. Filter with wet filter paper and add a few drops of sodium carbonate TS to 5 ml of the filtrate. If a turbidity is produced, add sufficient 14% sodium carbonate solution to the bulk filtrate until the lime is completely precipitated, filter again, the final filtrate contains not less than 4% of NaClO.
Preserve in amber coloured glass bottle, protected from

light.

Sodium Nitrite TS
Dissolve 1 g of sodium nitrite in water to make 100 ml.

Sodium Nitroprusside TS
Dissolve 1 g of sodium nitroprusside in water to make 20 ml.
This solution must be freshly prepared.

Sodium Periodate TS
Dissolve 1.2 g of sodium periodate in 100 ml of water.

Sodium Sulfite TS
Dissolve 20 g of anhydrous sodium sulfite in 100 ml of water.
This solution should be freshly prepared.

Sodium Sulfide TS
Dissolve 1 g of sodium sulfide in water to make 10 ml.
This solution should be freshly prepared.

Sodium Tetraphenylborate TS
Dissolve 0.1 g of sodium tetraphenylborate in water to make 100 ml.

Sodium Tungstate TS
Dissolve 25 g of sodium tungstate in 72 ml of water. Add 2 ml of phosphoric acid and mix well.

Stannous Chloride TS
Dissolve 1.5 g of stannous chloride in 10 ml of water and a small amount of hydrochloric acid.
This solution should be freshly prepared.

Sudan Ⅲ TS
Dissolve 0.01 g of sudan Ⅲ in 5 ml of 90% ethanol. Add 5 ml of glycerin and mix well.
Preserve in amber coloured glass bottle, use within 2 months.

Sulfuric Acid, dilute, TS
Dilute 57 ml of sulfuric acid with water to 1000 ml.
It contains 9.5%-10.5% of H_2SO_4.

Tannic Acid TS
Dissolve 1 g of tannic acid in 1 ml of alcohol and dilute with water to 100 ml.
This solution should be freshly prepared.

Trichloroacetic Acid TS
Dissolve 6 g of trichloroacetic acid in 25 ml of chloroform, add 0.5 ml of hydrogen peroxide solution and mix well.

Thioacetamide TS
Dissolve 4 g of thioacetamide in water to make 100 ml. Store in refrigerator. Add 1.0 ml of thioacetamide solution to 5.0 ml of a mixture consisting of 15 ml sodium hydroxide solution (1 mol/L), 5.0 ml of water and 20 ml of glycerin before use, heat for 20 seconds in a water bath, cool and use immediately.

Thiourea TS
Dissolve 10 g of thiourea in water to make 100 ml.

Trinitrophenol TS
A saturated solution of trinitrophenol in water.

Zinc Uranyl Acetate TS
Dissolve 10 g of uranyl acetate in 5 ml of glacial acetic acid and 50 ml of water by heating gently.
Dissolve 30 g of zinc acetate in 3 ml of glacial acetic acid and 30 ml of water with gentle heating. Mix the two solutions, cool and filter.

Vanillin TS
Dissolve 0.1 g of vanillin in 10 ml of hydrochloric acid.

Zinc Chloride-Iodine TS
Dissolve 20 g of zinc chloride and 2 g of potassium iodide in 10 ml of water, then saturated with iodine.
Preserve in amber coloured glass bottle.

XV C Test Papers

Ammoniated-Silver Nitrate TP
Immerse a strip of filter paper in ammoniated-silver nitrate TS until thoroughly wetted.

Benzidine-Cupric Acetate TP
To 9 ml of a saturated solution of benzidine acetate add 7 ml of water and 16 ml of 0.3% cupric acetate solution, immerse a strip of filter paper in the mixture until thoroughly wetted. Remove the paper and allow to dry.

Blue Litmus TP
Immerse a strip of filter paper in litmus IS until thoroughly wetted. Remove the paper and allow to dry.
Sensitivity Introduce 0.5 ml of hydrochloric acid (0.1 mol/L) in a beaker. Add 100 ml of freshly boiled and cooled water and mix. Drop a strip of blue litmus TP 10-12 mm in width in the solution and stir continuously. The colour of the paper changes within 45 seconds.

Cadmium Acetate TP
Dissolve 3 g of cadmium acetate in 100 ml of ethanol, add ammonia TS until the majority of the precipitate is dissolved. Filter and immerse a strip of filter paper in the filtrate. Remove the paper before use and allow to dry.

Congo Red TP
Immerse a strip of filter paper in congo red IS until thoroughly wetted, remove the paper and allow to dry.

Curcuma TP (Turmeric TP)
Immerse a strip of filter paper in curcuma IS until thoroughly wetted. Lay the paper on a glass plate and dry at 100℃.

Lead Acetate TP
Immerse a strip of filter paper in lead acetate TS until thoroughly wetted. Remove the paper and allow to dry at 100℃.

Mercuric Bromide TP
Immerse a strip of filter paper in alcoholic mercuric bromide TS for 1 hour. Remove the paper and allow to dry in a dark place.

Mercuric Chloride TP
Immerse a strip of filter paper in a saturated solution of mercuric chloride for 1 hour, then remove the strip and allow to dry in a dark place.

Mercuric Nitrate TP
To 45 ml of a saturated solution of mercuric nitrate add 1 ml of nitric acid. Immerse a strip of filter paper in the solution until thoroughly wetted. Remove the paper and allow to dry.

Red Litmus TP
Immerse a strip of filter paper in litmus IS, add a small amount of hydrochloric acid until a red colour is obtained. Remove the paper and allow to dry.
Sensitivity Introduce 0.5 ml of sodium hydroxide solution (0.1 mol/L) to a beaker, add 100 ml of freshly boiled and cooled water and mix. Drop a strip of red litmus TP 10-12 mm in width in the solution and stir continously. The colour of the paper changes within 30 seconds.

Starch-Iodide TP
Immerse a strip in 100 ml of freshly prepared starch IS, which contains 0.5 g of potassium iodide, until thoroughly wetted. Remove the paper and allow to dry.

Trinitrophenol TP

Immerse a strip of filter paper in a saturated solution of trinitrophenol until thoroughly wetted. Remove the paper and allow to dry.
Immerse the paper in sodium carbonate solution (1→10) immediately before use until wetted uniformly.

XV D Buffer Solutions

Acetate BS (pH 3.5)
Dissolve 25 g of ammonium acetate in 25 ml of water, add 38 ml of hydrochloric acid solution (7 mol/L). Adopt the potentiometric method to adjust accurately the pH value to 3.5 with hydrochloric acid solution (2 mol/L) or ammonia solution (5 mol/L) and dilute with water to 100 ml.

Ammonium Acetate BS (pH 4.5)
Dissolve 7.7 g of ammonium acetate in 50 ml of water. Add 6 ml of glacial acetic acid and dilute with water to 100 ml.

Ammonium Acetate BS (pH 4.8)
Dissolve 77 g of ammonium acetate in about 200 ml of water, add 57 ml of glacial acetic acid and dilute with water to 1000 ml.

Ammonium Acetate BS (pH 6.0)
Dissolve 100 g of ammonium acetate in 300 ml of water, add 7 ml of glacial acetic acid and mix well.

Ammonia-Ammonium Chloride BS (pH 8.0)
Dissolve 1.07 g of ammonium chloride in water to 100 ml. Add dilute ammonia solution (1→30) and adjust pH value to 8.0.

Ammonia-Ammonium Chloride BS (pH 10.0)
Dissolve 5.4 g of ammonium chloride in 20 ml of water, add 35 ml of concentrated ammonia solution. Dilute with water to 100 ml.

Citrate-Phosphate BS (pH 4.0)
(a) Dissolve 21 g of citric acid or 19.2 g of anhydrous citric acid in water to 1000 ml, preserve in a refrigerator.
(b) Dissolve 71.63 g of disodium hydrogen phosphate in water to 1000 ml.
To 61.45 ml of solution (a) add 38.55 ml of solution (b) and mix well.

Phosphate BS (pH 6.8)
Add 118 ml of sodium hydroxide solution (0.2 mol/L) to 250 ml of potassium dihydrogen phosphate solution (0.2 mol/L), dilute with water to 1000 ml and shake thoroughly.

Phosphate BS (pH 7.6)
Dissolve 27.22 g of potassium dihydrogen phosphate in water to make 1000 ml.
Mix 50 ml of this solution with 42.4 ml of sodium hydroxide solution (0.2 mol/L) dilute with water to 200 ml.

Phosphate-Pancreatin BS (pH 6.8)
(a) Dissolve 6.8 g of potassium dihydrogen phosphate in 500 ml of water and adjust the pH value to 6.8 with sodium hydroxide solution (0.1 mol/L).
(b) Dissolve 10 g of pancreatin in water.
Mix the two solutions and dilute with water to 1000 ml.

Sodium Acetate BS (pH 3.7)
Dissolve 20 g of anhydrous sodium acetate in 300 ml of water, add 1 ml of bromophenol blue IS and 60-80 ml of glacial acetic acid until the colour changes from blue to pure green, and then dilute with water to 1000 ml.

Sodium Acetate BS (pH 4.5)
Dissolve 18 g of sodium acetate in 9.8 ml of glacial acetic acid, and dilute with water to 1000 ml.

Sodium Acetate BS (pH 6.0)
Dissolve 54.6 g of sodium acetate in 20 ml of acetic acid solution (1 mol/L). Dilute with water to 500 ml.

XV E Indicator Solutions

Bromophenol Blue IS
Dissolve 0.1 g of bromophenol blue in 3.0 ml of sodium hydroxide solution (0.05 mol/L), and dilute with water to 200 ml.
Colour changes from yellow to bluish green (pH 2.8-4.6).

Bromothymol Blue IS
Dissolve 0.1 g of bromothymol blue in 3.2 ml of sodium hydroxide solution (0.05 mol/L), and dilute with water to 200 ml.
Colour changes from yellow to blue (pH 6.0-7.6).

Calcein Indicator Mixture
Mix uniformly 0.1 g of calcein with 10 g of potassium chloride by grinding.

Calcon Indicator Mixture
Mix uniformly 0.1 g of calcon with 10 g of anhydrous sodium sulfate by grinding.

Cresol Red IS
Dissolve 0.1 g of cresol red in 5.3 ml of sodium hydroxide solution (0.05 mol/L), and dilute with water to 100 ml.
Colour changes from yellow to red (pH 7.2-8.8).

Cresol Red-Thymol blue IS
Mix 1 volume of cresol red IS with 3 volume of a 0.1% solution of thymol blue.

Crystal Violet IS
Dissolve 0.5 g of crystal violet in 100 ml of glacial acetic acid.

Curcuma IS (Turmeric IS)
Extract 20 g of curcuma powder with 4 quantities of each of 100 ml of cool water to remove water soluble matter and dry the residue at 100℃. Macerate with 100 ml of ethanol for a few days and filter.

Diphenylcarbazide IS
Dissolve 1 g of diphenylcarbazide in 100 ml of ethanol.

Dithizone IS
Dissolve 50 mg of dithizone in 100 ml of ethanol.

Eriochrome Black T Indicator Mixture
Mix uniformly 0.1 g of eriochrome black T with 10 g of sodium chloride by grinding.

Ferric Ammonium Sulfate IS
Dissolve 8 g of ferric ammonium sulfate in 100 ml of water.

Fluorescein IS
Dissolve 0.1 g of fluorescein in 100 ml of ethanol.

Litmus IS
Add 40 ml of ethanol to 10 g of litmus powder, heat under reflux for 1 hour. Allow to settle and decant off the supernatant liquid. Repeat the operation twice using 30 ml of ethanol each time. Wash the residue with 10 ml of water and decant off the washing liquid. Boil the residue with 50 ml of water, allow to cool and filter.
Colour changes from red to blue (pH 4.5-8.0).

Methyl Orange IS
Dissolve 0.1 g of methyl orange in 100 ml of water.

Colour changes from red to yellow (pH 3.2-4.4).

Methyl orange-Xylene Cyanol blue FF IS
Dissolve 0.1 g of methyl orange and 0.1 g of xylene cyanol blue FF in 100 ml of ethanol.

Methyl Red IS
Dissolve 0.1 g of methyl red in 7.4 ml of sodium hydroxide solution (0.05 mol/L) and dilute with water to 200 ml.
Colour changes from red to yellow (pH 4.2-6.3).

Methyl Red-Bromocresol Green IS
To 20 ml of 0.1% alcoholic solution of methyl red add 30 ml of 0.2% alcoholic solution of bromocresol green, and mix well.

Methyl Red-Methylene blue IS
To 20 ml of 0.1% alcoholic solution of methyl red add 8 ml of 0.2% solution of methylene blue, and mix well.

***o*-Phenanthroline IS**
Dissolve 0.5 g of ferrous sulfate in 100 ml of water, add 2 drops of sulfuric acid and 0.5 g of *o*-phenanthroline. Shake thoroughly.
This solution should be freshly prepared.

Phenolphthalein IS
Dissolve 1 g of phenolphthalein in 100 ml of ethanol.
Colour changes from colourless to red (pH 8.3-10.0).

Sodium Alizarinsulfonate IS
Dissolve 0.1 g of sodium alizarinsulfonate in 100 ml of water.
Colour changes from yellow to purple (pH 3.7-5.2).

Starch IS
Add 5 ml of water to 0.5 g of soluble starch and mix well, then pour the suspension slowly into 100 ml of boiling water with stirring. Boil for 2 minutes, cool and decant the supernatant liquid.
This solution should be freshly prepared.

Starch Iodide IS
Dissolve 0.2 g of potassium iodide in 100 ml of freshly prepared starch IS.

Thymol Blue IS
Dissolve 0.1 g of thymol blue in 4.3 ml of sodium hydroxide solution (0.05 mol/L), and dilute with water to 200 ml.
Colour changes from red to yellow (pH 1.2-2.8); from yellow to bluish-violet (pH 8.0-9.6).

Thymolphthalein IS
Dissolve 0.1 g of thymolphthalein in 100 ml of ethanol.
Colour changes from colourless to blue (pH 9.3-10.5).

Xylenol Orange IS
Dissolve 0.2 g of xylenol orange in 100 ml of water.

XV F Volumetric Solutions

Ammonium Thiocyanate (0.1 mol/L) VS
[NH_4SCN 76.12] 7.612 g→1000 ml
Preparation Dissolve 8.0 g of ammonium thiocyanate in water to make 100 ml, and mix well.
Standardization To 25 ml of silver nitrate (0.1 mol/L) VS, accurately measured, add 50 ml of water, 2 ml of nitric acid and 2 ml of ferric ammonium sulfate IS; titrate with ammonium thiccyanate solution to the appearance of pale reddish-brown colour which persists on shake vigorously. Calculate the concentration of the ammonium thiocyanate VS according to the volume consumed. Sodium thiocyanate (0.1 mol/L) VS or potassium thiocyanate (0.1 mol/L) VS can be used in place of the Ammonium Thiocyanate (0.1 mol/L) VS.

Benzalkonium Chloride (0.01 mol/L) VS
Preparation Dissolve 3.8 g of benzalkonium chloride in water, add 10 ml of sodium acetate BS (pH3.7) and dilute with water to 1000 ml. Mix well.
Standardization Dissolve about 0.18 g of analytical pure potassium chloride, accurately weighed, previously dried for 1 hour at 150℃, in sodium acetate BS (pH3.7) to make 250 ml. Mix well.
Transfer accurately 20 ml to a 50 ml volumetric flask, add accurately 25 ml of sodium tetraphenylborate (0.02 mol/L) VS, dilute with water to 50 ml and mix well. Filter with dry filter paper, discard the initial filtrate. Transfer accurately 25 ml of the successive filtrate to a 150 ml conical flask, add 0.5 ml of bromophenol blue IS. Titrate with benzalkonium chloride (0.01 mol/L) VS to a blue colour.
Each ml of benzalkonium chloride (0.01 mol/L) VS is equivalent to 0.7445 mg of potassium chloride.

Bromine (0.01667 mol/L) VS
[Br 79.90] 7.990 g→1000 ml
Preparation Dissolve 3 g of potassium bromate and 15 g of potassium bromide in water to make 1000 ml, and mix well.
Standardization To 25 ml of bromine VS, accurately measured, in an iodine flask add 100 ml of water and 2 g of potassium iodide, shake thoroughly. Add 5 ml of hydrochloric acid, stopper the flask and allow to stand in the dark for 5 minutes. Titrate with sodium thiosulfate (0.1 mol/L) VS, add 2 ml of starch IS towards the end point of titration, continue to titrate until the blue colour disappears.
Calculate the concentration of the bromine VS according to the volume consumed.
When the room temperature is above 25℃, the reacting liquid must be cooled to about 20℃. Bromine VS should be standardized immediately before use.
If bromine (0.001667 mol/L) VS is needed, dilute bromine (0.01667 mol/L) VS with water and standardize accordingly.
Storage Preserve in well-closed amber coloured glass bottle, stored at a cool place.

Ceric Sulfate (0.1 mol/L) VS
[$Ce(SO_4)_2 \cdot 4H_2O$ 404.30] 40.43 g→1000 ml
Preparation Dissolve 42 g of ceric sulfate (or 70 g of ceric ammonium sulfate) in 500 ml of water and 28 ml of sulfuric acid by heat, cool, add water to make 1000 ml.
Standardization Dissolve about 0.15g, accurately weighed, of arsenic trioxide, previously dried to constant weight at 105℃, in 10 ml of sodium hydroxide (1 mol/L) VS, by warm, add 50 ml of water, 25 ml of hydrochloric acid, 5 ml of iodine monochloride TS and 2 drops of *o*-phenanthroline IS, then titrate with ceric sulfate (0.1 mol/L) VS towards the end point of titration, heat it to 50℃ and continue to titrate until the colour turns from pale red to pale green. Each ml of ceric sulfate (0.1 mol/L) VS is equivalent to 4.946 mg of arsenic trioxide.
If ceric sulfate (0.01 mol/L) VS is needed, dilute ceric sulfate (0.1 mol/L) VS with water containing 2.8% (ml/ml) of sulfuric acid.

Disodium Edetate (0.05 mol/L) VS
[$C_{10}H_{14}N_2Na_2O_8 \cdot 2H_2O$ 372.24] 18.61 g→1000 ml
Preparation Dissolve 19 g of disodium edetate in water to make 1000 ml and mix well.
Standardization Dissolve 0.12 g of zinc oxide primary standard, previously ignited to constant weight at about 800℃ and accurately weighed, in 3 ml of dilute hydrochloric acid. Add 25 ml of water and 1 drop of 0.025% ethanolic solution of methyl red, and add ammonia TS until a slight yellow colour is obtained. Add 25 ml of water, 10 ml of

ammonium chloride BS (pH 10.0) and a small amount of eriochrome black T indicator. Titrate with disodium edetate VS until the colour changes from violet to pure blue. Perform a blank determination and make any necessary correction. Each ml of disodium edetate (0.05 mol/L) VS is equivalent to 4.069 mg of ZnO.
Storage Preserve in a glass stoppered bottle, avoid to contact with rubber.

Ethanolic Potassium Hydroxide (0.5 mol/L) VS
[KOH 56.11] 28.06 g→1000 ml
Preparation Dissolve 35 g of potassium hydroxide in a conical flask, in aldehyde-free ethanol to make 1000 ml, well close with a rubber stopper and allow to settle for 24 hours. Decant the supernatant liquid immediately and transfer into a rubber stoppered amber coloured glass bottle.
Standardization Dilute 25 ml of hydrochloric acid (0.5 mol/L) VS with 50 ml of water, add a few drops of phenolphthalein IS. Titrate with ethanolic potassium hydroxide (0.5 mol/L) VS. Calculate the concentration of the ethanolic potassium hydroxide VS according to the volume consumed.
This solution should be standardized before use.
Storage Preserve in a rubber stoppered amber coloured glass bottle.

Hydrochloric Acid (1.0, 0.5, 0.2 mol/L or 0.1 mol/L) VS
[HCl 36.46] 36.46 g→1000 ml
18.23 g→1000 ml
7.292 g→1000 ml
3.646 g→1000 ml
Preparation (1) Hydrochloric Acid (1 mol/L) VS Dilute 90 ml of hydrochloric acid with water to 1000 ml and mix well.
(2) Hydrochloric Acid (0.5, 0.2 mol/L or 0.1 mol/L) VS Dilute 45 ml, 18 ml or 9.0 ml of hydrochloric acid respectively with water to 1000 ml and mix well.
Standardization (1) Hydrochloric Acid (1 mol/L) VS Weigh accurately about 1.5 g of anhydrous sodium carbonate primary standard, previously dried to constant weight at 270-300℃, and dissolve it in 50 ml of water. Add 10 drops of methyl red-bromocresol green IS, titrate with hydrochloric acid (1 mol/L) VS until the colour turns from green to purplish-red. Boil for 2 minutes, cool to room temperature and continue the titration until the colour turns from green to dark purple. Each ml of hydrochloric acid (1 mol/L) VS is equivalent to 53.00 mg of anhydrous sodium carbonate.
(2) Hydrochloric Acid (0.5 mol/L) VS Weigh accurately about 0.8 g of anhydrous sodium carbonate primary standard titrate as directed above. Each ml of hydrochloric acid (0.5 mol/L) VS is equivalent to 26.50 mg of anhydrous sodium carbonate.
(3) Hydrochloric Acid (0.2 mol/L) VS Weight accurately about 0.3 g of anhydrous sodium carbonate primary standard titrate as directed above. Each ml of hydrochloric acid (0.2 mol/L) VS is equivalent to 10.60 mg of anhydrous sodium carbonate.
(4) Hydrochloric Acid (0.1 mol/L) VS Weigh accurately about 0.15 g of anhydrous sodium carbonate primary standard titrate as directed above. Each ml of hydrochloric acid (0.1 mol/L) VS is equivalent to 5.30 mg of anhydrous sodium carbonate.
If hydrochloric acid (0.05, 0.02 mol/L or 0.01 mol/L) VS is needed, dilute hydrochloric acid (1.0 or 0.1 mol/L) VS with water and standardize if necessary.

Iodine (0.05 mol/L) VS
[I 126.90] 12.69 g→1000 ml
Preparation Dissolve 13.0 g of iodine and 36 g of potassium iodine in 50 ml of water, add 3 drops of hydrochloric acid and dilute with water to 1000 ml, mix well and filter with a sintered glass filter.
Standardization Weigh accurately about 0.15 g of arsenic trioxide primary standard, previously dried to constant weight at 105℃, and dissolve it in 10 ml of sodium hydroxide (1 mol/L) VS by heating gently. Add 20 ml of water, 1 drop of methyl orange IS, and add sulfuric acid (0.5 mol/L) VS until the colour turns from yellow to pink. Then add 2 g of sodium bicarbonate, 50 ml of water and 2 ml of starch IS, titrate with iodine VS until the solution is bluish-violet in colour. Each ml of iodine (0.05 mol/L) VS is equivalent to 4.946 mg of arsenic trioxide.
If iodine (0.025 mol/L) VS is needed, dilute the iodine (0.05 mol/L) VS with water.
Storage Preserve in well-closed, amber glass bottle, store at a cool place.

Mercuric Nitrate (0.05 mol/L) VS
[$Hg(NO_3)_2 \cdot H_2O$ 342.62] 17.13 g→1000 ml
Preparation Dissolve 17.2 g of mercuric nitrate in 400 ml of water and 5 ml of nitric acid, filter, dilute with water to 1000 ml and mix well.
Standardization Weigh accurately about 0.15 g of potassium chloride primary standard previously dried to constant weight at 110℃, and dissolve it in 100 ml of water, add 1 ml of diphenylcarbazide IS and titrate with mercuric nitrate VS, shaking vigorously until a pale rose violet colour appears. Each ml of mercuric nitrate (0.05 mol/L) VS is equivalent to 5.844 mg of sodium chloride.

Oxalic Acid (0.05 mol/L) VS
[$C_2H_2O_4 \cdot 2H_2O$ 126.07] 6.304 g→1000 ml
Preparation Dissolve 6.4 g of oxalic acid in water to make 1000 ml and shake thoroughly.
Standardization Add 200 ml of water and 10 ml of sulfuric acid to 25 ml of oxalic acid VS, accurately measured. Titrate with potassium permanganate (0.02 mol/L) VS towards the end point of titration, heat the solution to 65℃ and continue the titration until the pale red colour persists for 30 seconds. The temperature of the solution should not be lower than 55℃ at the end of titration. Calculate the concentration of oxalic acid VS according to the volume consumed.
If oxalic acid (0.25 mol/L) VS is needed, weigh about 32 g of oxalic acid, prepare and standardize as directed above but titrate with potassium permanganate (0.1 mol/L) VS.
Storage Preserve in well-closed stoppered amber coloured glass bottle.

Perchloric Acid (0.1 mol/L) VS
[$HClO_4$ 100.46] 10.05 g→1000 ml
Preparation To 750 ml of glacial acetic acid add an amount of acetic anhydride equivalent to 5.22 ml per gram of water present, add 8.5 ml of perchloric acid (70%-72%) and mix well. Add 23 ml of acetic anhydride dropwise with shake, cool and dilute with dehydrated glacial acetic acid to 1000 ml, mix well and allow to stand for 24 hours. If the reactant is susceptible to acetylation, the water content of perchloric acid VS should be determined (Appendix Ⅷ M, method 1), and adjusted to 0.01%-0.02% by the addition of water or acetic anhydride.
Standardization Weigh accurately about 0.16 g of potassium biphthalate primary standard previously dried to constant weight at 105℃, and dissolve in 20 ml of dehydrated glacial acetic acid. Add 1 drop of crystal violet IS and titrate slowly with perchloric acid (0.1 mol/L) VS to a blue end point. Perform a blank determination and make any necessary correction.
Each ml of perchloric acid (0.1 mol/L) VS is equivalent to 20.42 mg of potassium biphthalate.
If perchloric acid (0.05 mol/L or 0.02 mol/L) VS is needed, dilute perchloric acid (0.1 mol/L) VS with dehydrated glacial acetic acid and standardize, if necessary.

Perchloric Acid in dioxane (0.1 mol/L) VS Dissolve 8.5 ml of perchloric acid (70%-72%) in 100 ml of isopropanol and dilute with dioxane to 1000 ml.
Weigh accurately about 0.16 g of potassium biphthalate primary standard, previously dried to constant weight at 105℃, and dissolve it in 25 ml of propylene glycol and 5 ml of isopropanol by warming. Cool, add 30 ml of dioxane and a few drops of methyl orange-xylene cyanol blue IS, titrate with perchloric acid in dioxane VS until the colour turns from green to bluish-grey. Perform a blank determination and make any necessary correction.
Storage Preserve in well-closed amber coloured glass bottle.

Potassium Bromate (0.01667 mol/L) VS
[$KBrO_3$ 167.00] 2.784 g→1000 ml
Preparation Dissolve 2.8 g of potassium bromide in water to make 1000 ml and mix well.
Standardization To 25 ml of potassium bromate VS, accurately measured, in an iodine flask add 2 g of potassium iodide and 5 ml of dilute sulfuric acid, stopper the flask and mix well. Allow to stand in the dark for 5 minutes, dilute with 100 ml of water, titrate with sodium thiosulfate (0.1 mol/L) VS towards the end point of titration, add 2 ml of starch IS, continue to titrate until the blue colour disappears. Calculate the concentration of the potassium bromate VS according to the volume consumed.
If the room temperature is above 25℃, the reacting liquid and the water of dilution must be cooled to about 20℃.

Potassium Dichromate (0.01667 mol/L) VS
[$K_2Cr_2O_7$ 294.18] 4.903 g→1000 ml
Preparation Weigh accurately about 4.903 g of potassium dichromate primary standard, previously dried to constant weight at 120℃, and dissolve if in water to make 1000 ml and mix well.

Potassium Iodate (0.05 mol/L or 0.01667 mol/L) VS
[KIO_3 214.00] 10.700 g→1000 ml
3.5667 g→1000 ml
Preparation Potassium Iodate (0.05 mol/L) VS Weigh accurately 10.700 g of potassium iodate primary standard, previously dried to constant weight at 105℃, and dissolve it in water to make 1000 ml, mix well.
Potassium Iodate (0.01667 mol/L) VS Weigh accurately 3.5667 g of potassium iodate primary standard, previously dried to constant weight at 105℃, and dissolve it in water to make 1000 ml, mix well.

Potassium Permanganate (0.02 mol/L) VS
[$KMnO_4$ 158.03] 3.161 g→1000 ml
Preparation Boil about 3.2 g of potassium permanganate with 1000 ml of water for 15 minutes, allow to stand in a well closed vessel for 2 days, filter with a sintered glass filter and mix well.
Standardization Weigh accurately about 0.2 g of sodium oxalate primary standard, previously dried to constant weight at 105℃, and dissolve it in 250 ml of freshly boiled and cooled water and 10 ml of sulfuric acid with stirring. Add quickly from a burette about 25 ml of potassium permanganate (0.02 mol/L) VS, after the fading of its colour, heat the solution to 65℃ and continue to titrate until the red colour persists for 30 seconds. The temperature of the solution should not be lower than 55℃ at the end of titration. Each ml of potassium permanganate (0.02 mol/L) VS is equivalent to 6.70 mg of sodium oxalate.
If potassium permanganate (0.002 mol/L) VS is needed, dilute potassium permanganate (0.02 mol/L) VS with water, boil and cool. Filter and standardize, if necessary.
Storage Preserve in well-closed amber coloured glass bottle.

Silver Nitrate (0.1 mol/L) VS
[$AgNO_3$ 169.87] 16.99 g→1000 ml
Preparation Dissolve 17.5 g of silver nitrate in water to make 1000 ml and mix well.
Standardization Weigh accurately about 0.2 g of sodium chloride primary standard, previouly dried to constant weight at 110℃, and dissolve it in 50 ml of water. Add 5 ml of dextrin solution (1→50), 0.1 g of calcium carbonate and 8 drops of fluorescein IS, titrate with silver nitrate (0.1 mol/L) VS until the colour of the opalescent liquid turns from yellowish-green to red. Each ml of silver nitrate (0.1 mol/L) VS is equivalent to 5.844 mg of sodium chloride.
If silver nitrate (0.01 mol/L) VS is needed, dilute silver nitrate (0.1 mol/L) VS with water immediately before use.
Storage Preserve in a well-closed amber coloured glass bottle.

Sodium Hydroxide (1.0, 0.5 mol/L or 0.1 mol/L) VS
[NaOH 40.00] 40.00 g→1000 ml
20.00 g→1000 ml
4.000 g→1000 ml
Preparation Shake sodium hydroxide with water to make a saturated solution, cool, transfer to a polyvinyl plastic bottle and allow to stand for several days.
Dilute 56, 28 ml or 5.6 ml respectively of the saturated and clarified sodium hydroxide solution with freshly boiled and cooled water to 1000 ml, and mix well.
Standardization (1) Sodium Hydroxide (1 mol/L) VS Weigh accurately about 6 g of potassium biphthalate primary standard, previously dried to constant weight at 105℃, add 50 ml of freshly boiled and cooled water and shake thoroughly. Add 2 drops of phenolphthalein IS and titrate with sodium hydroxide (1 mol/L) VS to a pink end point. Potassium biphthalate should have been completely dissolved towards the end point of titration.
Each ml of sodium hydroxide (1 mol/L) VS is equivalent to 204.2 mg of potassium biphthalate.
(2) Sodium Hydroxide (0.5 mol/L) VS Weigh accurately about 3 g of potassium biphthalate primary standard, previously dried to constant weight at 105℃. Standardize as directed above. Each ml of sodium hydroxide (0.5 mol/L) VS is equivalent to 102.1 mg of potassium biphthalate.
Sodium Hydroxide (0.1 mol/L) VS Weigh accurately about 0.6 g of potassium biphthalate primary standard, previously dried to constant weight at 105℃. Standardize as directed above. Each ml of sodium hydroxide (0.1 mol/L) VS is equivalent to 20.42 mg of potassium biphthalate.
If sodium hydroxide (0.05, 0.02 mol/L or 0.01 mol/L) VS is needed, dilute sodium hydroxide (0.1 mol/L) VS with freshly boiled and cooled water. Standardize against hydrochloric acid (0.05, 0.02 mol/L or 0.01 mol/L) VS, if necessary.
Storage Preserve in a tightly closed polyvinyl plastic bottle, insert 2 glass tubes through the stopper, connect one of the tubes to a soda lime tube, use the other tube for the outlet of the volumetric solution.

Sodium Methoxide (0.1 mol/L) VS
[CH_3ONa 54.02] 5.402 g→1000 ml
Preparation Place 150 ml of dehydrated methanol (it contains water less than 0.2%) in a vessel cooled with ice water, add 2.5 g of freshly cut metallic sodium in portions, add dehydrated benzene (it contains water less than 0.2%) to make 1000 ml and mix well.
Standardization Weigh accurately about 0.4 g of benzoic acid primary standard. Previously dried to constant weight in a vaccum desiccator over phosphorus pentoxide, and dissolve it in 15 ml of dehydrated methanol. Add 5 ml of dehydrated benzene and 1 drop of a 1% solution of thymol blue in dehydrated methanol, titrate with sodium methoxide VS to a blue end point. Perform a blank determination and make any necessary correction.

Each ml of sodium methoxide (0.1 mol/L) VS is equivalent to 12.21 mg of benzoic acid.
Sodium methoxide VS must be standardized immediately before use, protected from carbon dioxide and avoid volatilization of solvent.
Storage Preserve in a well-closed container of a titrating assembly, protected from carbon dioxide and moisture.

Sodium Nitrite (0.1 mol/L) VS
[$NaNO_2$ 69.00] 6.900 g→1000 ml
Preparation Dissolve 7.2 g of sodium nitrite and 0.1 g of anhydrous sodium carbonate in water to make 1000 ml and mix well.
Standardization Weigh accurately about 0.5 g of sulfanilic acid primary standard, previously dried to constant weight at 120℃, and dissolve it in 30 ml of water and 3 ml of concentrated ammonia TS. Add 20 ml of hydrochloric acid solution (1→2) with stirring, plunge the burette into the solution so that about 2/3 of the tip is under the liquid surface, titrate with sodium nitrite VS quickly with stirring at a temperature below 30℃. Withdraw the burette tip towards the end point of titration, rinse it with water and add the washings to the solution, continue the titration slowly, adopt the dead-stop method for end point determination. Each ml of sodium nitrite (0.1 mol/L) VS is equivalent to 17.32 mg of sulfanilic acid.
When sodium nitrite (0.05 mol/L) VS is needed, dilute sodium nitrite (0.1 mol/L) VS with water and standardize, if necessary.
Storage Preserve in well-closed amber coloured glass bottle.

Sodium Tetraphenylborate (0.02 mol/L) VS
[$(C_6H_5)_4BNa$ 342.22] 6.845 g→1000 ml
Preparation Dissolve 7.0 g of sodium tetraphenylborate in 50 ml of water with shake. Add freshly prepared aluminum hydroxide gel (dissolve 1.0 g of aluminum chloride in 25 ml of water, add sodium hydroxide TS dropwise with stirring until the pH is 8-9), 16.6 g of sodium chloride and stir thoroughly. Add 250 ml of water and shake for 15 minutes, allow to stand for 10 minutes and filter. Add sodium hydroxide TS dropwise to the filtrate until the pH is 8-9, and then dilute with water to 1000 ml, mix well.
Standardization To 10 ml of sodium tetraphenylborate VS add 10 ml of sodium acetate BS (pH3.7) and 0.5 ml of bromophenol blue IS, and then titrate with benzalkonium chloride (0.01 mol/L) VS until the colour changes to blue. Perform a blank determination and make any necessary correction. Calculate the concentration of sodium tetraphenylborate (0.02 mol/L) VS according to the volume consumed.
This solution should be standardized before use.
Dilute this solution with water before use, if sodium tetraphenylborate (0.01 mol/L) VS is needed, and standardize, if necessary.
Storage Preserve in well-closed amber coloured glass bottle.

Sodium Thiosulfate (0.1 mol/L) VS
[$Na_2S_2O_3 \cdot 5H_2O$ 248.19] 24.82 g→1000 ml
Preparation Dissolve 26 g of sodium thiosulfate and 0.2 g of anhydrous sodium carbonate in freshly boiled and cooled water to make 1000 ml, shake thoroughly, allow to stand for 1 month and filter.
Standardization Weigh accurately about 0.15 g of potassium dichromate primary standard, previously dried to constant weight at 120℃, and dissolve it in 50 ml of water in an iodine flask. Add 2.0 g of potassium iodide and dissolve with gentle shake, add 40 ml of dilute sulfuric acid. Stopper the flask and shake thoroughly, allow to stand in the dark for 10 minutes, Dilute with 250 ml of water and titrate with sodium thiosulfate (0.1 mol/L) VS until the end point is nearly reached, add 3 ml of starch IS and continue to titrate until the colour turns from blue to brilliant green. Perform a blank determination and make any necessary correction. Each ml of sodium thiosulfate (0.1 mol/L) VS is equivalent to 4.903 mg of potassium dichromate. When the room temperature is above 25℃, the reacting liquid and water of dilution must be cooled to about 20℃.
If sodium thiosulfate (0.01 mol/L or 0.005 mol/L) VS is needed, dilute sodium thiosulfate (0.1 mol/L) VS with freshly boiled and cooled water immediately before use.

Sulfuric Acid (0.5, 0.25, 0.1 mol/L or 0.05 mol/L) VS
[H_2SO_4 98.08] 49.04 g→1000 ml
24.52 g→1000 ml
9.81 g→1000 ml
4.904 g→1000 ml
Preparation Sulfuric acid (0.5 mol/L) VS: Add slowly 30 ml of sulfuric acid to water with stirring, cool to room temperature, dilute with water to 1000 ml, mix well.
Sulfuric acid (0.25, 0.1 mol/L or 0.05 mol/L) VS: Add slowly 15 ml, 6.0 ml or 3.0 ml of sulfuric acid to water with stirring, dilute with water to 1000 ml, mix well.
Standardization Standardize as described under hydrochloric acid (1.0, 0.5, 0.2 mol/L or 0.1 mol/L) VS.
If sulfuric acid (0.01 mol/L) VS is needed, dilute sulfuric acid (0.5, 0.1 mol/L or 0.05 mol/L) VS with water and standardize, if necessary.

Tetrabutylammonium Hydroxide (0.1 mol/L) VS
[$(C_4H_9)_4NOH$ 259.48] 25.95 g→1000 ml
Preparation Dissolve 40 g of tetrabutylammonium iodide in 90 ml of dehydrated methanol in a stoppered glass conical flask. Place in an ice bath, add 20 g of finely powdered silver oxide, stopper the flask and shake vigorously for 60 minutes. Centrifuge a few ml and test the supernatant liquid for iodide. If the test is positive, add an additional 2 g of silver oxide to the above mixture and shake vigorously for 30 minutes. When all of the iodide has reacted, filter through a sintered glass funnel, rinse the flask and the funnel with three portions of 50 ml of dehydrated toluene, add the rinsings to the filtrate. Dilute with a mixture of dehydrated toluene and dehydrated methanol (3 : 1) to 1000 ml and mix well. Flush the solution for 10 minutes with dry nitrogen which is free from carbon dioxide. If the solution is not clear, add a few ml of dehydrated methanol.
Standardization Weigh accurately about 90 mg of benzoic acid primary standard, previously dried to constant weight in a vaccum desiccator over phosphrous pentoxide, and dissolve in 10 ml of dimethylformamide. Add 3 drops of a 0.3% solution of thymol blue in dehydrated methanol, and titrate to a blue end point with tetrabutylammonium hydroxide VS (adopt potentiometric method to indicate the end point). Perform a blank determination and make any necessary correction. Each ml of tetrabutylammonium hydroxide (0.1 mol/L) VS is equivalent to 12.21 mg of benzoic acid.
Storage Preserve in well-closed container, keep away from the carbon dioxide and moisture in air.

Zinc (0.05 mol/L) VS
[Zn 65.39] 3.270 g→1000 ml
Preparation Dissolve 15 g of zinc sulfate (equivalent to 3.3 g of Zn) in 10 ml of dilute hydrochloric acid and sufficient water to make 1000 ml, mix well.
Standardization To 25 ml of zinc (0.05 mol/L) VS, accurately measured, add 1 drop of a 0.025% solution of methyl red in ethanol, add ammonia TS dropwise until a slight yellow colour appears. Add 25 ml of water, 10 ml of ammonium chloride BS (pH10.0) and a small amount of eriochrome black T indicator, titrate with disodium edetate (0.05 mol/L) VS until the colour changes from purple to pure blue. Perform a blank determination and make any necessary correction. Calculate the concentration of zinc VS

according to the volume consumed.

XV G Chemical Reference Substances, Reference Drugs and Reference Extractives

Chemical Reference Substances

Acephate
Aconitine
Adenine
Adenosine
Aesculetin
Aesculin
Alantolactone
Aloe-emodin
Aloin
Alpinetin
Aminopropionic acid
Ammonium glycyrrhizinate
Amygdalin hydrobromide
Andrographolide
Anhydrous glucose
Anisodamine
Arctiin
Arginine
Aristolochic acid
Artemisinin
Asiaticoside
Asperosaponin Ⅵ (Akeboside D)
Astragaloside Ⅵ
Atropine sulfate
Baicalein
Baicalin
Belamcandin (Tectoridin)
Benzene hexachloride (BHC)
Berberine hydrochloride
Bergenin
Betaine
Bilirubin
Bilobalide
(+)-Borneol
(−)-Borneol
Bornyl acetate
(±)-Borneol and (±)-Isoborneol
Brucine
Buddlejasaponin Ⅳ b
Buddleoside
Bufogenin
Caffeic acid
Caffeoyl acetate
Calcium carbonate
Camphor
Cantharidin
Capsaicin
Cardamonin
Carvacrol
Catalnol
(+)-Catechin
Chenodeocholic acid
Chlorogenic acid
Chlorophenothane (DDT)
Cholic acid
Chonglou saponin Ⅰ
Chonglou saponin Ⅱ
Chonglou saponin Ⅵ
Chrysin
Chrysophanol
Cineole
Cinnamaldehyde
Cinnamic acid
Cinobufagin
Citrulline
Codeine phosphate
Corynoline
Costunolide
Crocin-Ⅰ
Crocin-Ⅱ
Curculigoside
Curcumenol
Curcumin
Cyclovirobuxine D
Cypermethrin
α-Cyperone
Dehydroandrographolide
Dehydrocostuslactone
Deltamethrin
Deoxycholic acid
Deoxyschisandrin
3,29-Dibenzoylkarounitriol
1,5-*O*-Dicaffeoylquinic acid
Diethion
1,8-Dihydroxyanthraquinone
Dimethoate
β,β'-Dimethylacrylalkanin
Dimethyl-dichloro-vinyl phosphate
Dimpylate
Diosgenin
Dracohodin perochlorate
Echinacoside
Emodin
Ephedrin hydrochloride
(−)-Epicatechin
Ethoxychelerythrine
Ethyl-*p*-methoxycinnamate
Eugenol
Evodiamine
Fangchinoline
Farrerol
Fenvalerate
Ferrous sulfate
Ferulic acid
Folimat
Formononetin B
Forsythin
Fraxetin
Fraxinellon
Galangin
Gallic acid
Gastrodin
Geniposide
Gentiopicrin
Germacrone
Giokgoneolic acid
Ginkgolide A
Ginkgolide B
Ginkgolide C
Ginsenoside Rb_1
Ginsenoside Rb_3
Ginsenoside Re
Ginsenoside Rf
Ginsenoside Rg_1
Prim-*O*-Glucosylcimifugin
Glycine
Glycyrrhetinic acid
Harpagide
Harpagoside
Hederagenin

Hesperidin
Histidine
Honokiol
Hupehenine
5-Hydroxymethyl-2-furaldehyde
Hydroxysafflor yellow A
Hyodeoxycholic acid
Hyperoside
Icariine
Imperatorin
Indigotin
Indirubin
Irisflorentin
Isoalantolactone
(±)-Isoborneol
Isoferulic acid
Isofraxidin
Isoimperatorin
Isopsoralen
Isorhamnetin
Isorhamnetin-3-*O*-neohesperidoside
Jatrorrhizine hydrochloride
Jujuboside A
Jujuboside B
Kaempferol
Kirenol
Kochioside Ic
Leonurine perchlorate
Leucine
Linderane
Linolein
Liquidambaric acid
Liquiritin
Lobetyolin
Loganin
Luteolin
Luteolin-7-*O*-glucoside
Lysine
Madecassoside
Magnolin
Magnolol
Malathion
Mannitol
Matrine
Menthol
(－)-Menthone
Methamidophos
Methidathion
4-Methoxybenzaldehyde
4-Methoxysalicylaldehyde
Methyl parathion
Methylnonylketone
Methylsalicylate
5-*O*-Methylvisammioside
Mollugin
Monocrotophos
Morphine
Morphine hydrochloride
Muscone
Naringin
Nitidine chloride
Notoginsenoside R_1
Nuciferine
Oleanolic acid
Olein
Osthole
Oxymatrine
Paeoniflorin
Paeonol
Palmatine hydrochloride
Panaxadiol
Panaxatriol
Papaverine hydrochloride
Parathion
Patchoulialcohol
Pectolinarin
Peimine
Peinine
Physcion
Picroside Ⅰ
Picroside Ⅱ
α-Pinene
Pingpeimine A
Pinoresinol diglucoside
Piperine
Polydatin
Polygalacic acid
Praeruptorin A
Protocatechuic acid
Protocatechuic aldehyde
Protopine
Pseudoginsenoside F_{11}
Pseudolaric acid
Psoralen
Puerarin
Pulegone
2-Pyrrolidine carboxylic acid
Quercetin
Quercitroside
Quintozene
Raddeanin A
Rhein
Rutaecarpine
Rutin
Saikosaponin a
Saikosaponin d
Salidroside
Salvianolic acid B
Sarsasapogenin
Schisandrin
γ-Schisandrin
Schisantherin A
Scopolamine hydrobromide
Scopoletin
Scutellarin
Sesamine
Shikonin
Shionone
Silybin
Sinapine cyanide sulfonate
Sinomenine
Sipeimine
β-Sitosterol
Sodium aescinate
Sodium Danshensu
Sodium taurocholate
Sophoricoside
Sophoridin
Stachydrine hydrochloride
Strychnine
Swertiamain
Synephrine
Syringoside
Tanshinone $ⅡA$
Taurine
Tetrahydropalmatine
2,3,5,4'-Tetrahydroxystilbene-2-*O*-β-D-glucoside
Tetrandrine
Threomine
Thymol

Toddaloactone
Trigonelline
Tubemoside I
Typhaneoside
Uridine
Ursodeoxycholic acid
Ursolic acid
Valine
Vanillic acid
Verbascoside
Vitexicarpin
Wogonin

Reference Drugs
Benzoinum
Bulbus Allii Macrostemonis
Bulbus Fritillariae Cirrhosae
Bulbus Fritillariae Hupehensis
Bulbus Fritillariae Pallidiflorae
Bulbus Fritillariae Thunbergii
Bulbus Fritillariae Ussuriensis
Bulbus Lilii
Calyx seu Fructus Physalis
Catechu
Caulis Erycibes
Caulis Piperis Kadsurae
Caulis Polygoni Multiflori
Caulis Sargentodoxae
Cornu Cervi Pantotrichum
Cornu Saigae Tataricae
Cortex Ailanthi
Cortex Albiziae
Cortex Berberidis
Cortex Dictamni
Cortex Meliae
Cortex Mori
Cortex Moutan
Cortex Phellodendri Amurensi
Cortex Phellodendri Chinensi
Cortex Pseudolaricis
Cortex Syringae Amurensis
Eupolyphaga seu Steleophaga
Exocarpium Citri Grandis
Fel Bovis
Fel Capra Seu Ovis
Fel Serpentis
Flos Albiziae
Flos Buddlejae
Flos Campsis
Flos Carthami
Flos Celosiae Cristatae
Flos Chrysanthemi Indici
Flos Eriocauli
Flos Genkwa
Flos Inulae
Flos Sophorae
Folium Apocyni Veneti
Folium Citri Reticulatae
Folium Eucommiae
Folium Ginkgo
Folium Mori
Folium Perillae
Folium Rhododendri Daurici
Folium Sennae
Folium Viticis Negundo
Fructus Alpiniae Oxyphyllae
Fructus Anisi Stellati
Fructus Arctii
Fructus Aristolochiae
Fructus Aurantii Lmmaturus
Fructus Cannabis
Fructus Carotae
Fructus Carpesii
Fructus Chaenomelis
Fructus Chebulae
Fructus Chebulae Immaturus
Fructus Citri
Fructus Citri Sarcodactylis
Fructus Cnidii
Fructus Crataegi
Fructus Evodiae
Fructus Forsythiae
Fructus Galangae
Fructus Gardeniae
Fructus Hordei Germinatus
Fructus Jujubae
Fructus Litseae
Fructus Lycii
Fructus Momordicae
Fructus Mume
Fructus Piperis Longi
Fructus Schisandrae Chinensis
Fructus Schisandrae Sphenantherae
Fructus Toosendan
Fructus Tribuli
Fructus Viticis Negundis
Fructus Xanthii
Galla Chinensis
Ganoderma
Herba Andrographis
Herba Artemisiae Annuae
Herba Cichorii; Radix Cichorii
Herba Cirsii
Herba Cirsii Japonici
Herba Cistanches
Herba Corydalis Bungeanae
Herba Desmodii Styracifolii
Herba Dracoephali Tangutici
Herba Ecliptae
Herba Euonymi
Herba Eupatorii
Herba Hypecoe Leptocarpe
Herba Hyperici Perforati
Herba Lamiophlomidis
Herba Leonuri
Herba Lobeliae Chinensis
Herba Lycopodii
Herba Picriae
Herba Potentillae Chinensis
Herba Sarcandrae
Herba Saururi
Herba Saussureae Involucratae
Herba Schizonepetae
Herba Selaginellae
Herba Senecionis Scandentis
Herba Siegesbeckiae
Herba Swertae
Herba Verbenae
Herba Violae
Herba Visci
Lasiosphaera seu Calvatia
Lignum Dalbergiae Odoriferae
Lignum Sappan
Margarita
Medulla Junci
Padix Panacis Quinquefolii
Pericarpium Citri Reticulatae
Pericarpium Papaveris
Pericarpium Trichosanthis
Pericarpium Zanthoxyli

Pheretima
Poria
Radix Adenophorae
Radix Ampelopsis
Radix Angelicae Dahuricae
Radix Angelicae Pubescentis
Radix Angelicae Sinensis
Radix Astragali
Radix Aucklandiae
Radix Bupleuri
Radix Changii
Radix Codonopsis
Radix Dipsaci
Radix et Rhizoma Asteris
Radix et Rhizoma Ginseng
Radix et Rhizoma Ginseng Rubra
Radix et Rhizoma Glycyrrhizae
Radix et Rhizoma Notoginseng
Radix et Rhizoma Rhei
Radix et Rhizoma Rubiae
Radix et Rhizoma Salviae Miltiorrhizae
Radix et Rhizoma seu Caulis Acanthopanacis Senticosi
Radix Gentianae Macrophyllae
Radix Hedysari
Radix Inulae
Radix Inulae Racfmosae
Radix Kansui
Radix Knoxiae
Radix Linderae
Radix Morindae Officinalis
Radix Ophiopogonis
Radix Paeoniae Alba
Radix Paeoniae Rubra
Radix Platycodonis
Radix Polygalae
Radix Polygoni Multiflori
Radix Pseudostellariae
Radix Rehmanniae
Radix Rhapontici
Radix Rosae Lavigatae
Radix Saposhnikoviae
Radix Scrophulariae
Radix Scutellariae
Radix Viadimiriae
Radix Zanthoxyli
Radixet Rhizoma Cynanchi Atrati
Ramulus et Folium Picrasmae
Ramulus Rubi
Rhizoma Acori Calami
Rhizoma Acori Tatarinowii
Rhizoma Alpiniae Officinarum
Rhizoma Atractylodis
Rhizoma Atractylodis Macrocephalae
Rhizoma Belamcandae
Rhizoma Bletillae
Rhizoma Chuanxiong
Rhizoma Coptidis
Rhizoma Corydalis
Rhizoma Curcumae
Rhizoma Curcumae Longae
Rhizoma Cyperi
Rhizoma Dioscoreae Septemlobae
Rhizoma Dryopteridis Crassirhizomatis
Rhizoma et Radix Ligustici
Rhizoma et Radix Notopterygii
Rhizoma et Radix Polygoni Cuspidati
Rhizoma Fagopyri Dibotryis
Rhizoma Gastrodiae
Rhizoma Iridis Tectori
Rhizoma Menispermi
Rhizoma Pairdis
Rhizoma Phragmitis
Rhizoma Picrorhizae
Rhizoma Sparganii
Rhizoma Wenyujin Concisum
Rhizoma Zingiberis
Sanguis Draconis
Semen Arecae
Semen Cassiae
Semen Coicis
Semen Holarrhena Antidysentericae
Semen Myristicae
Semen Nelumbinis
Semen Nigellae
Semen Pharbitidis
Semen Raphani
Semen Vaccariae
Spica Schizonepetae
Squama Manis
Stigma Croci
Styrax
Venenum Bufonis

Reference Extractives
Cablin Patch Oil
Costusroot Essential Oil
Curcuma Oil
Dioscorea Extract
Dioscorea Nipponica Saponin Extract
Fermented Cordyceps Powder
Ginkgo Biloba Extract
Peppermint Oil
Sandal Wood Oil
Total Ginkgolic Acids
Xylaria Powder

Appendix XVI Sterilisation

Sterilisation is the process to inactivate or remove any viable micro-organisms of a product by physical or chemical means. The methods described in this chapter may be used for the sterilisation of preparations, raw materials, excipients and medical devices.

Sterility is the absence of any viable micro-organisms. Absolute sterility of a product can not be guaranteed nor can it be demonstrated by testing to any batch of sterilized product. In practice, a product is sterilized to decrease the survival probability of micro-organisms to a specified level, and is designated as sterility assurance level (SAL). The survival probability of micro-organisms of a product treated by terminal sterilisation is not more than 10^{-6}. The SAL of a process for a given product is established by appropriate validation studies.

The sterility assurance of a sterile product can not be guaranteed by testing, but depends on the use of the validated sterilisation process, good manufacturing practice (GMP), and good quality assurance system. It is essential that the following factors are fully considered in choosing a suitable sterilisation procedure, including nature of the product to be sterilized, effectiveness and economy of the procedure, and integrity and stability of the product after sterilisation.

It is essential to validate the process before being applied to practice. The validated items include:

(1) Establish the validation protocols and the evaluation standard.

(2) Ensure that the equipments are suitable and running effectively.

(3) Demonstrate that the key equipment and instrumentation are capable of operating within the prescribed parameter criteria.

(4) Perform replicate cycles by employing actual or simulated product and demonstrate the effectiveness of the process.

(5) Summarize the records and complete the documents above, to form a validation report.

In manufacture practice, the process of sterilisation should be monitored, and the key parameters of the procedure (such as temperature, pressure, duration, humidity, concentration of the gas and the dose of radiation etc.) shoule be within the validated limits. The Validation of sterilisation process should be repeated at suitable interval. Revalidation is carried out whenever major changes in the procedure, including changes in the load, take place.

The sterility assurance is related with the degree of microbial contamination of the product before sterilisation and the resistance of the contaminating micro-organisms. Therefore, it is essential to control the level of viable micro-organisms contamination of a product prior to sterilisation and the resistance of the contaminating micro-orgamisms, to choose adequate precautions to minimize the contamination with in the prescribed limits in the manufacturing process.

It is necessary to avoid re-contamination of the product after sterilisation. In all cases, the container and closure are required to maintain the sterility of the product throughout its shelf-life.

Methods of Sterilisation

The frequently-used methods include steam, dry heat, ionization radiation, gas and filtration. One or combinations of the above methods may be used, depending on the nature of the product. Wherever possible, the terminal sterilisation should be chosen. If terminal sterilisation is not possible, filtration or aseptic processing is used. Wherever possible, appropriate additional treatment (for example, steam) of a non-final product is applied.

1. Steam sterilisation

In this method, the products are placed in a chamber, and sterilized by saturated steam under pressure or overheated water flow which leads to denaturation of protein and nucleic acid to achieve the inactivation of micro-organisms. Steam is the most effective and most widely used method, and may be used for pharmaceutical preparations, containers, culture media, sterile coats, plastic plugs, and other materials resistant to high temperature and moisture. Steam sterilisation does not guarantee the complete inactivation of bacterial spores, and is often used as an complementary sterile technique for thermo-labile products.

The process is usually carried out by the following conditions:

121℃	15 min
121℃	30 min
116℃	40 min

Other combinations of time and temperature may be used provided that they could give an SAL of 10^{-6} or less. For thermo-stable product, deep sterilisation is used, the SAL should be less than 10^{-12}. For thermo-labile products, the standard time of sterilisation (F_0) [means the standard duration in the condition of 121.1℃ of sterile temperature, one minute of D-value, and 10.0℃ of Z-value] usually is not less than eight minutes. If F_0 is less than eight, the contamination of micro-organisms should be monitored in the whole manufacturing process, all the measures should be taken to minimize the level of contamination of micro-organisms and to ensure that products being sterilized meet the requirements of sterility assurance.

For steam sterilisation, the products to be sterilized should be loaded in the sterilizing chamber perfectly, no tightness, to ensure that they are all effectively and equally sterilized.

Knowledge of the coolest part of the chamber is obtained before this method is applied. Put the biological indicator at the coolest part to ensure SAL of the products has been achieved. Spores of *Bacillus stearothermophilus* are usually used as the indicator for this method.

2. Dry heat sterilisation

Dry heat sterilisation is carried out in an oven or tunnel equipment for sterilisation with forced air circulation, where micro-organisms and pyrogens are inactivated by high temperature. This method is suitable for products where steam sterilisation is inappropriate, such as glass utensils, metal containers, fibre products, solid drugs, and liquid paraffin wax.

The process is usually carried out by heating the product at 160-170℃ for 120 minutes or longer, 170-180℃ for 60 minutes or longer, or 250℃ for 45 minutes or longer. Other

combinations of time and temperature may be used provided that they could give an SAL of 10^{-6} or less. For thermostable product, sterilize it until the SAL is$\leqslant 10^{-12}$ wherever possible. In the latter case, sterility test for these products prior to sterilisation is not necessary. Dry heat at 250℃ for 45 minutes can also remove the pyrogens of containers and other equipments.

Put the products in suitable containers to ensure that they are all effectively and equally sterilized.

Knowledge of the coolest part of the chamber is obtained before this method is applied. Spores of *Bacillus subtilis* are usually used as the indicator for this method. Put the biological indicator at the coolest part to ensure SAL of the products has been achieved. Endotoxin inactivation test can verify the effectiveness of depyrogenation. Generally not less than 1000 EU of endotoxin which is derived from *Escherichia coli* may be added into the items prior to depyrogenation, in this case the reduction of the endotoxin is at least 3-log.

3. Ionising radiation sterilisation

Sterilisation by this method is achieved by exposure of the product to ionizing radiation in the form of gamma radiation from a suitable radioisotopic source (such as cobalt 60) or of a beam of electrons energized by a suitable electron accelerator. This method may be used for medical devices, containers, manufacturing equipments, and other raw materials and preparations resistant to radiation.

The SAL of the product is not more than 10^{-6} after ionising radiation sterilisation. The key parameter of ionising radiation sterilisation is mainly absorbed radiation dose. The radiation dose absorbed by the material being irradiated should be identified according to the suitability of the products and the maximum amount of the contaminated micro-organisms and the maximum resistance to radiation. It should be validated before the performance that the safety, efficiency and stability of a product should not be changed by the radiation dose. A reference absorbed dose is 25 kGy.

Use the lowest possible radiation dose for the final product, raw materials and medical devices. Before irradiation, test the number of contaminated microorganisms and the resistance to the irradiation of the product to evaluate the SAL of the procedure.

During the procedure, the radiation absorbed by the product should be monitored regularly by means of suitable chemical or physical methods to ensure that the dose is appropriate. If dosimeters radiated along with sterilized products are adopted, place them at specifid positions. Calibrate against a standard source at suitable intervals.

Spores of *Bacillus pumilus* are usually used as the indicator for this method.

4. Gas sterilisation

In this method, micro-organisms are inactivated in a high-pressure chamber filled with gas of disinfectors, for example, ethylene oxide, hydrogen peroxide, formaldehyde and ozone (O_3). This method is suitable for the products which are stable in these gases. Inflammability, teratogenesis and residue toxicity of the gases should be considered in the process of sterilisation.

The most generally used gas in this method which is carried out in a high pressure chamber filled with sterilized gas is ethylene oxide, usually mixed with 80%-90% inert gases. This method is applicable to medical devices and plastic products that are not durable by using high temperature methods. This method is not applicable to products which contain chlorine or can absorb ethylene oxide.

Temperature, humidity and gas concentration in the chamber, as well as the duration could affect the effectiveness of sterilisation by using ethylene oxide. The following conditions are recommended:

Temperature: (54±10)℃.

Pressure: 8×10^5 Pa

Relative humidity: (60±10)%

Duration: 90 minutes

The process of sterilisation is validated before application. During the procedure, the chamber is vacuumized first, then filled with vapor to the specified humidity and temperature. Fill in the filtered and pre-heated ethylene oxide. During the process, seriously monitor the temperature, humidity, pressure, concentration of ethylene oxide and time. Use biological indicators to monitor the effectiveness of sterilisation, if necessary. The process should be supervised by skilled technicians. After the material to be sterilized is exposed either to ethylene oxide or to a mixture of ethylene oxide with a suitable inert gas, adequate time should be left to allow dispersal of residual ethylene oxide and other volatile residues. It should be monitored that the residues are within the prescribed limits. Eliminate the remaining gas in the product to a degree free of toxicity to human.

Leaking test should be carried out to ensure obturation of the chamber. Package materials and alignment of the products can affect the gas penetration and diffusion. Spores of *Bacillus subtilis* are usually used as the indicator for this method.

5. Filtration

In this method, micro-organisms in the gas or liquid products are removed by filtering through a certain type of filter material. It is usually used for thermo-labile solutions of drugs and raw materials. Sterilisation filter units use microporous filter membranes (hydrophilic or lipophilic) as the filter material. The pore size is usually less than 0.22 μm. Avoid loss of solute by absorption on to the filter and to avoid the release of contaminants from the filter. Avoid use of membranes containing asbestos. The filter unit and membranes are sterilized before use. The filter units is cleaned first and then new membranes are used for a new batch of products.

The sterility assurance level in this method is related with bioburden of a product prior to sterilisation and the log reduction value (LRV) of the filter unit. Calculate LRV with the following expression:

$$LRV=\lg N_0-\lg N$$

Where N_0 represents the number of micro-organisms before filtration, and N is the number after filtration.

LRV is used to express the efficiency of filtration. The LRV per cm^2 of active filter surface is not less than 7 for 0.22 μm-pore-size membranes. Two filters may be linked to increase the efficiency.

Key factors, such as pore size, membrane integrity and LRV can not be monitored in the filtration process. Therefore, the integrity and effectiveness of the membranes should be validated before use. Validate the filter unit for at least once in a working day.

The products sterilized by this method should be operated in a cleaned area with rigorous monitoring and a sterile area is recommended. Relative facility, package container, stopper and other materials should be sterilized by appropriate methods, and recontamination should be avoided.

Pseudomonas diminuta are usually used as the indicator for this method.

6. Aseptic preparation

Aseptic preparation denotes the manufacturing of sterile preparations under sterile condition. It may include aseptic filling of products into containers and aseptic lyophilization. Filtration is usually used in the latter process.

It is necessary to monitor the environmental of aseptic preparation, and the filtration should be carried out under sterile conditions. The equipments, containers, plugs and other materials should be used suitable sterilisation methods

and recotamination should be avoided.
Sterility assurance of this process is carried out by simulating test for sterility by aseptic filling culture media. Sterility of the circumstance, personnel and materials should be monitored in the whole process.
The aseptic preparation should be validated at intervals, including periodic environmental filter examination and simulating test for sterility by aseptic filling culture media.

Biological indicators
Biological indicators are preparations of viable micro-organisms used to assess the performance of sterilisation equipments, to validate and monitor the effectiveness of sterilisation process. They usually consist of bacterial spores.

1. The Requirements for micro-organisms used as biological indicators
Different biological indicators are used for different sterilisation methods. The micro-organisms used as biological indicators comply with the following requirements:
(1) The test strain is more resistant than any possible contaminating micro-organisms in the product to be examined.
(2) The test strain is non-pathogenic.
(3) The test strain is resistant to mutation and easy to store.
(4) The test strain is easy to culture. If resting spores are used, they should be more than 90% of the indicator.

2. Preparation of biological indicators
The biological indicators are prepared using a specified procedure. Characteristics of the micro-organisms are determined before use, for example, D-value, which is the duration (expressed in minutes) with which the number of viable organisms are reduce to 10% of the original number at a definite temperature. Use suitable culture media for the incubation. Suspend the cultures, which mainly consist of spores. Store the spores as suspensions in innutrient liquids. Biological indicators consist of a definite number of one or more types of spores. They are usually placed on an inert carrier, for example a strip of filter paper, a glass slide, stainless or plastic materials. Spore suspensions may be presented in sealed ampoules. Biological indicators are packed with suitable materials, and an expiry date is set. The carriers and package materials protect the biological indicators from any deterioration or contamination, while allowing the sterilizing agent to enter into and contact with the micro-organisms. The packages are designed to facilitate storage, transportation, sampling and subculture.
Some biological indicators may be inoculated directly into a liquid product to be sterilized or into a liquid product similar to that to be sterilized. In the latter case, the equivalence of the liquid products are demonstrated.

3. Application of biological indicators
In validation of sterilisation process, though some parameter can be used, the effectiveness of a sterilisation process is most easily assessed by the degree to which biological indicators are inactivated. Commercial biological indicators, or spores prepared from resistant micro-organisms isolated from contaminants are used as biological indicators. The resistance, purity and number of spores are validated for the biological indicators. The quantity and resistance of spore of the biological indicators used should be more or greater than the contamination of the product to ensure the effectiveness of the process. Put the biological indicators at different position of the chamber for the terminal sterilisation. Avoid direct contact of the indicator with the product to be sterilized. Incubate the indicators after specified sterilisation on suitable culture media to guarantee inactivation of all the spores.
Commercial biological indicators may be used for validation test of deep sterilisation. For susceptible products, select suitable strains and spores as the biological indicator and design the process depending on the degree that the products are contaminated. Sterility assurance of these products are assessed by monitoring the number and resistance of contaminating micro-organisms and the validation test.

4. Common biological indicators

(1) Steam sterilisation Spores of *Bacillus stearothermophilus* (for example, NCTC 10007, NCIMB 8157, ATCC 7953) are recommended as the indicator for steam sterilisation. The D-value is 1.5-3.0 minutes, the number of viable spores in each tablet (or ampul) is 5×10^5-5×10^6, and all the micro-organisms are inactivated at 121℃ for 19 minutes. Spores of *Clostridium sporogenes* (for example, NCTC 8594, NCIMB 8053, ATCC 7955) may also be used, with D-value of 0.4-0.8 minutes.

(2) Dry-heat sterilisation Spores of *Bacillus subtilis* (for example, NCIMB 8058, ATCC 9372) are recommended as the indicator for dry-heat sterilisation. The D-value is more than 1.5 minutes, the number of viable spores in each tablet is 5×10^5-5×10^6. Use *Escherichia coli* endotoxin for validation of, depyrogenation the amount added is not less than 1000 EU.

(3) Ionising radiation sterilisation Spores of *Bacillus pumilus* (for example, NCTC 10327, NCIMB 10692, ATCC 27142) are recommended as the indicator for ionising radiation sterilisation. The number of viable spores in each tablet is 10^7-10^8. The D-value is around 3 kGy when a 25 kGy radiation dose is applied. Contaminated micro-organisms in the product may be more resistant to radiation than *B. pumlus*. Therefore, the latter can only be used to monitor the process, and can not be used to establish the radiation dose.

(4) Gas sterilisation Spores of *Bacillus subtilis* (for example, NCTC 10073, ATCC 9372) are recommended as the indicator for gas sterilisation with ethylene oxide. The number of viable spores in each tablet is 1×10^6-5×10^6. The D-value is more than 2.5 minutes, and the concentration of ethylene oxide is 600 mg/L. The relative humidity is 60%. The microorganisms are inactivated at 54℃ for 60 minutes. Spores of *Bacillus stearothermophilus* (for example, NCTC 10007, NCIMB 8157, ATCC 7953) are recommended as the indicator for gas sterilisation with hydrogen peroxide.

(5) Filtration *Pseudomonas diminuta* (for example ATCC 19146) is recommended as the indicator when 0.22 μm-pore-size membranes are used for filtration. *Serratin marcescens* (for example, ATCC 14756) is recommended when 0.45 μm-pore-size membranes are used.

Appendix XVII Names, Symbols and Atomic Weights of Elements

C=12.00

Element	Symbol	Atomic weight	Element	Symbol	Atomic weight
Aluminium	Al	26.981538(2)	Magnesium	Mg	24.3050(6)
Antimony(Stibium)	Sb	121.760(1)	Manganese	Mn	54.938049(9)
Argon	Ar	39.948(1)	Mercury(Hydrargyrum)	Hg	200.59(2)
Arsenic	As	74.92160(2)	Molybdenum	Mo	95.94(2)
Barium	Ba	137.327(7)	Nickel	Ni	58.6934(2)
Bismuth	Bi	208.98038(2)	Nitrogen	N	14.0067(2)
Boron	B	10.811(7)	Oxygen	O	15.9994(3)
Bromine	Br	79.904(1)	Palladium	Pd	106.42(1)
Cadmium	Cd	112.411(8)	Phosphorus	P	30.973761(2)
Calcium	Ca	40.078(4)	Platinum	Pt	195.078(2)
Carbon	C	12.0107(8)	Potassium(Kalium)	K	39.0983(1)
Cerium	Ce	140.116(1)	Selenium	Se	78.96(3)
Chlorine	Cl	35.453(2)	Silicon	Si	28.0855(3)
Chromium	Cr	51.9961(6)	Silver(Argentum)	Ag	107.8682(2)
Cobalt	Co	58.933200(9)	Sodium(Natrium)	Na	22.989770(2)
Copper(Cuprum)	Cu	63.546(3)	Strontium	Sr	87.62(1)
Fluorine	F	18.9984032(5)	Sulfur	S	32.065(5)
Gallium	Ga	69.723(1)	Technetium	Tc	[99]
Germanium	Ge	72.64(1)	Tellurium	Te	127.60(3)
Gold(Aurum)	Au	196.96655(2)	Thorium	Th	232.0381(1)
Helium	He	4.002602(2)	Tin(Stannum)	Sn	118.710(7)
Holmium	Ho	164.93032(2)	Titanium	Ti	47.867(1)
Hydrogen	H	1.00794(7)	Tungsten(Wolfram)	W	183.84(1)
Indium	In	114.818(3)	Uranium	U	238.02891(3)
Iodine	I	126.90447(3)	Vanadium	V	50.9415(1)
Iron(Ferrum)	Fe	55.845(2)	Xenon	Xe	131.293(6)
Lanthanum	La	138.9055(2)	Ytterbium	Yb	173.04(3)
Lead(Plumbum)	Pb	207.2(1)	Zinc	Zn	65.409(4)
Lithium	Li	6.941(2)	Zirconium	Zr	91.224(2)

Notes 1. The last digit of an atomic mass is shown in parentheses.
2. The figure in square brackets is the atomic mass of an isotope which exists with the longest half-life.

Appendix XVIII

XVIII A Guidelines for Validation of Analytical Method Adopted in Traditional Chinese Medicine Quality Specification

The purpose of validation of analytical method is to ensure that the adopted method meets requirements for the intended analytical applications. When drafting the traditional chinese medicine quality specification, the analytical methods should be validated. When the prescription, the technics changes, or the original analytical method is revised, the analytical methods of the specification also need to be validated. The process and result of the method validation should be recorded in the description of draft or the revision of pharmaceutical quality specification.

The analytical items to be validated are as follows, identification, limit test, quantification and determination of the other components whose content should be limited (such as residues, additives, etc). In the dissolution and release test of traditional chinese medicine pharmaceuticals, the analytical method of dissolution amount should also be validated.

The parameters to be validated are as follows, accuracy, precision (including repeatability, intermediate-precision and reproducibility), specificity, limit of detection, limit of quantification, linearity, range and ruggedness. The parameters to be validated should accord to the practical method. The analytical items and the corresponding parameters to be validated listed in the attached table can be used for reference.

The parameters of analytical method to be validated are as follows:

Accuracy The accuracy of an analytical method is the degree of closeness between the determined result obtained by this method and the true value or the reference value, commonly denoted by the percent rate of recovery (%). Accuracy should be determined in the specified range. The accuracy of the analytical methods used for the determination of quantification should also be validated.

1. Accuracy of the determination methods Reference substances with known purity can be used for the determination of the recovery of added samples, namely an amount of the reference substance with known purity of analyte is precisely added into the substance being examined with known content of analyte to be examined. The margin of the determined value and the amount of the substance being examined is divided by the amount of the added reference substance to calculate the recovery ratio.

In the test of the recovery of added samples, the sum of the added amount of the reference substance and the amount of the analyte in the substance being examined must be in the linearity range of the standard curve. The amount of the added reference substance should be proper. A very low amount will cause a large error. And a high amount will relatively reduce the amount of the interference substances, so the authenticity is bad.

$$\text{Recovery}\% = \frac{C - A}{B} \times 100\%$$

In the above formula: A is the amount of the analyte in the substance being examined;
B is the amount of the added reference substance;
C is the determined value.

2. Requirement for the Data

In the specified range, the determined results of 6 substances being examined with the same concentration are used for evaluating; or 3 different concentration levels are selected, then 3 testing solutions of each concentration level are prepared and determined, and these 9 determined results are used for evaluating. Commonly, the proportion of the added amount of the mid concentration to the content of the substance being examined should be controlled to be about 1 : 1. The added amount of the substance being examined, the amount of the content of the substance being examined, the added amount of the reference substance, the determined results, the calculated value of recovery (%), and the RSD of recovery (RSD%) or the confidential limit should be reported.

Precision The precision of an analytical method is the agreement among individual test results when the procedure is applied repeatly to multiple samplings of a homogeneous sample in the specified test conditions. The precision is commonly denoted by deviation, standard deviation, or relative standard deviation.

The precision includes repeatability, intermediate-precision and reproducibility.

The precision of the results determined by the same analyst within a very short period of time in the same operation conditions, is repeatability. The precision among the results determined by different analysts in the same laboratory with different instrument at different time is intermediate-precision. The precision among results determined by different analysts in different laboratories using the same analytical procedure is reproducibility.

The precision of the analytical methods used for determination of quantification should be determined.

1. Repeatability

In the specified range, the determined results of 6 substances being examined with the same concentration are used for evaluating; or 3 different concentration levels are selected, then 3 testing solutions of each concentration level are prepared and determined, and these 9 determined results are used for evaluating.

2. Intermediate-precision

To examine the effect of random fluctuation factors on the precision, a scheme of intermediate-precision test should be designed. Fluctuation factors are different dates, different analysts and different instrument, etc.

3. Reproducibility

If an analytical method is adopted as a legal standard, the

reproducibility test should be carried out. For example, the reproducibility result is obtained by checking and examining the method in different laboratories, when the pharmacopoeial analytical method is established. The purpose, process and reproducibility result of checking and examining the method should be recorded in the description of the draft. To avoid affecting reproducibility results, the sample should be uniform, properly stored and transported.

4. Requirement for the Data

Standard deviation, relative standard deviation and confidential limit should all be reported.

Specificity The specificity of an analytical method is its characteristic to measure accurately and specially the analyte in the presence of components that may be expected to be present in the sample. The specificity of identification test, detection of limit and content determination method should all be examined.

1. Identification test

The compounds that may be coexist or have close related structures should be distinguished. Substances being examined free of analyte and compounds with similar structure or concerned compounds in constituents should all offer negative response. Microscope identification, chromatograph and spectrum identification should be attached with the representative images or graphs.

2. Content determination and impurity examination

The substance being examined, which does not contain the analyte (except for the medicinal materials that contain the analyte or the simulated prescription that does not contain the analyte), is examined to illustrate the specificity of the method. The representative graphs should be attached when chromatography, spectrum methods or other separation methods are used. The position of each component should be marked in the graph. The resolution of the chromatography should meet the requirement.

When necessary, diode array detection and mass-spectrum could be used to examine the peak purity.

Limit of Detection The limit of detection is the lowest amount, which can be detected, of the analyte of the substance being examined. Methods often used are as follows:

1. Directly observation method:

A series of substances being examined with known concentrations are used for analysis. The lowest concentration or amount that can be reliably detected will be determined.

This method can be used for both non-instrumental and instrumental methods.

2. Signal-to-noise ratio method

This method is only used in the analytical methods that can show the baseline noise. Namely the lowest concentration or amount that can be reliably detected is calculated by comparing the signals of the sample with a known-low concentration with those of the blank sample. Generally the concentration or amount injected into the instrument at which the SN ratio is 3 : 1 or 2 : 1, is the limit of detection.

3. Requirement for Data

The test graphs should be attached. The test process and the results of limit of detection should be illustrated.

Limit of Quantification Limit of Quantification is the lowest quantity, which can be quantitatively determined with acceptable precision and accuracy, of the substance being examined. The limit of quantification of the analytical method used for quantitative examination should be determined.

The Signal-to-noise ratio is often used to determine the quantification limit. Generally the concentration or the amount injected into the instrument, at which the SN ratio is 10 : 1, is used for determination.

Linearity

The linearity of an analytical method is the degree of the test results, that are directly proportional to the concentrations of the analyte in samples in a designed range.

Linearity relationship should be determined over the claimed range of the method. A series of substances being examined could be prepared by accurately diluting of a stock solution or weighing an amount of analyte seperately. Substances being examined with at least 5 different concentrations should be prepared. The determined response signal is used as a dependent variable of analyte's concentrations to draw a graph. The linearity is examined and the least square method is used for a linear regression. The response signals may be subjected to mathematical transformation prior to the linearity regression analysis when necessary.

Requirement for data: regression equation, correlation coefficient and the linear graph should be given.

Range The range of an analytical method is the concentration or quantity interval between the lower and upper levels of analyte in which the testing method can be used with a certain precision, accuracy and linearity.

The range should be determined according to the practical application of analytical methods, results and requirement of linearity, accuracy and precision. As for the analytes with toxicity, special or pharmacological effectiveness, the range should be larger than the range of the limited content. For the determination of dissolution or release, the range should be ±20% of the limit.

Ruggedness The ruggedness of an analytical method is the degree of tolerance that the determined results are not affected when there are small changes in the testing conditions. The ruggedness should be taken into account when an analytical method begins to be studied. If the requirement for the testing conditions are hard, it should be clearly indicated in the method. The representative variable factors are as follows: the stability of the solution being examined, times and duration of sample extraction, etc. Representative variable factors of liquid chromatography include the composition and pH value of the mobile phase, the same type of the chromatographic columns from different manufacturers or batches, column temperature and flow rate, etc. Representative variable factors of gas chromatography include the chromatographic columns and the stationary phase from different manufacturers or batches, different types of support, column temperature, sample inlet and detector temperature, etc. Representative variable factors of thin layer chromatography are layers from different manufacturers, ways of sample applying, changes of temperature and relative humidity at performance, etc.

It should be illustrated whether the testing conditions with slight changes can meet the requirements for system test, so that the validity of the method could be confirmed.

Tab. List of validation items and parameters

Item / Parameter	Identification	Impurity Test		Determination of content and dissolution
		Quantification	Limit	
Accuracy	−	+	−	+
Repeatability	−	+	−	+
intermediate-precision	−	+①	−	+①

continue

Item / Parameter	Identification	Impurity Test		Determination of content and dissolution
		Quantification	Limit	
Reproducibility②	+	+	+	+
Specificity③	+	+	+	+
Limit of Detection	−	−	+	−
Limit of Quantification	−	+	−	−
Linearity	−	+	−	+
Range	−	+	−	+
Ruggedness	+	+	+	+

①It is no need to validate the intermediate-precision if there is a validation of repeatability.
②The repeatability is determined, only when the analytical method is adopted by the legal standard.
③The lack of the specificity of an analytical method can be compensated by other relevant analytical methods.

The most import items in different types of analytical methods are listed in the table above. "−" represents that the items usually need not to be validated. "+" represents that the items usually need to be validated. If there are some special circumstances, it is determined on the basis of practical analysis object and circumstances.

XVIII B Guidelines for Application of Safety Tests for Injection of Traditional Chinese Medicine

The guidelines for application of safety tests for injections are provided for quality control and safely clinic application of injection of traditional Chinese medicine. The guidelines include test for abnormal toxicity, test for depressor substances, test for allergic responses, test for haemolysis and agglomeration, test for pyrogens and test for bacterial endotoxins. The guidelines are suitable for application and implementation of test method of safety tests for injections of traditional Chinese medicine.

Establishment of Limit

The limit is established according to requirements of various items. Since the limit is established, the validation tests should be carried out for at least 3 batches preparations.

1. Abnormal Toxicity

(1) Before the establishment of the limit, median lethal dose (LD_{50}) and minimum lethal dose (LD_5) of one single injection should be determined, as well as the symptoms of toxicity. The administration is usually to inject into vein, unless specified otherwise. If there are several types of injection routes, such as intravenous injection, intraperitoneal injection, subcutaneous injection, etc., the LD_{50} of the injection tested should be determined by into vein at least. The observation duration is 72 hours or longer.

(2) The limit dose of abnormal toxicity of injection should be less than that of normal toxicity (LD_5), and more than that of clinic administration. Meanwhile, the differences of labs, reactivity of animals and preparations should be considered carefully. The establishment of limit of abnormal toxicity should be complied with the variation range of normal toxicity.

For the injection with large dose, inject 0.8 ml of test solution into tail vein at normal speed (0.05-0.1 ml/s) to each of 20 mice. If neither death nor toxicity reaction is observed, the highest dose of injection should be determined as limit of abnormal toxicity test. The duration of observation is usually 48 hours and during the observation, either death or toxicity reaction should be recorded.

2. Depressor Substances

(1) Determine whether or not the preparation being examined can decrease the blood pressure and the correlation between the dose and the depressor value.

(2) The test for depressor substances should be established for the intravenous injection and subcutaneous injection which are possible to induce acute depressor effect like histamine.

(3) The limit of injection with small dose is usually estimated on the basis of clinic practice or not less than clinic dose.

(4) If no depressor effect was observed by injecting into vein with the dose of 2 ml/kg, so the dose can be determined as the limit of administration.

3. Allergic Responses

(1) Observe the acute toxic reactive symptoms of guinea pig after injected intraperitoneally (or subcutaneously) and intravenously the sample tested.

(2) Determine the doses of sensibilization and challenge on the basis of doses caused toxic reaction and clinic practice. The administration is usually to inject intraperitoneally for sensibilization, meanwhile to inject in vein for challenge, unless specific symptom is observed (i.g, severe stimulus effect). The dose of challenge should be more than that of sensibilization, meanwhile the doses of challenge and sensibilization should be less than that of acute toxic reaction.

(3) In the preliminary test, 9 guinea pigs are divided into 3 groups and sensibilized for 3 times. Challenge test or antibody titer test should be carried out on the 14th, 21st and 28th day after the first sensibilization for the determination of optimal time for challenge.

(4) If necessary, semi-product can be used in the preliminary test for sensibilization and challenge to determine the allergenic possibility of components and manufacture procedure of the injection tested. If no sensibilization of semi-product and manufacture procedure is observed, it should be thought that the allergens test need not to be carried out for this product.

4. Test for Haemolysis and Agglomeration

To observe whether or not haemolysis and agglomeration occurred to the injection and its dilution. In test, injection tested, positive control, negative control and injection negative control should be arranged. If positive reaction is observed, the minimum dilution of no reaction should be tested and the limit of dilution for test can be determined combined with the clinic dose and administration.

5. Pyrogen

(1) In the test for pyrogen by using rabbit, the dose of

injection being examined should be 1-3 times more than that of clinic practice for human being per kg weight every hour.
(2) If the injection being examined is extreme acid/basic or not iso-osmia, it should be adjusted.
(3) The dose of injection for pyrogen test should not decrease the temperature of rabbit or induce toxic reaction. If the above disturbance occurs in the test, some measurements such as injecting slowly should be employed to eliminate it, otherwise, bacteria endotoxin test should be carried out as possible.

6. Test for Bacteria Endotoxins
(1) The determination of limit of endotoxin in injection prepared from traditional Chinese medicine should complied with the requirements of test for bacteria endotoxin (Appendix XIII D). Because of complication of manufacture procedure, components and variable factors, the estimation of limit should be more than that of requirement, in consideration of clinic practice and manufacture procedure.
(2) Because of various disturbance of injection, tachypleus amebocyte lysates from different manufacturers and various batches of injections under examination should be used as more as possible in the methodology research to estimate the disturbance effect. If the results are more different, the test for pyrogen should be used instead.

Test for Abnormal Toxicity

The abnormal toxicity of a substance being examined is determined by observing the death of mice within a specified period after having received by injection or taken orally a dose of substance under examination.
Healthy mice from normal breeding each weighing 17-20 g are used and can only be used once for the test.

Preparation of test solution Unless specified otherwise, dissolve the substance being examined in normal saline solution to produce a solution of the concentration specified in individual monographs.

Procedure Unless specified otherwise administer to each of 5 mice 0.5 ml of the test solution by one of the following routes specified in monographs.

Intravenous injection Inject the test solution into a tail vein of each mouse. The injection should be completed within 4-5 seconds at a uniform rate or 30 seconds specified for slowly injection.

Intraperitoneal injection Inject the test solution from the abdominal surface into the peritoneal cavity.

Subcutaneous injection Inject the test solution subcutaneously at one side of the dorsal surface or under the abdominal surface.

Oral administration Administer the test solution orally by means of a suitable cannula.

Evaluation of the results Unless specified otherwise, none of the mice received the test solution dies within 48 hours. If one or more mice die within 48 hours, repeat the test using another 10 mice each weighing 18-19 g; none of the second group of mice dies within 48 hours.

Test for Depressor Substances

The depressor substance of a preparation being examined (T) is determined by comparing its depressor effect on anesthetized cat (or dog) with that of the histamine reference standard (RS) under the condition of the following method.

Preparation of standard solution Dissolve an accurately weighed quantity of the histamine phosphate RS in water to produce a solution of 1 mg histamine base per ml. It can be stored in suitable container at 4-8℃ for 3 months unless precipitation occurred.

Dilution of standard solution Immediately before the test, dilute the histamine solution with normal saline solution to produce a solution of 0.5 μg of histamine base per ml.

Preparation of test solution Prepare a solution of preparation being tested to produce a solution with suitable concentration specified in the monograph so that the volume of the solution being injected will be equal to that of the standard solution.

Procedure A healthy cat weighing over 2 kg, male or non-pregnant female, is anesthetized with a suitable anesthetic such as one of the barbiturates. Care should be taken to maintain the body temperature of the animal during the test. Fix the cat on an operating table, introduce a short glass cannula into the trachea so as to be ready for artificial respiration when necessary. Insert a cannula filled with suitable anticoagulant solution into one of the carotid artery and connect the cannula to a suitable pressure measuring device for making a continuous record of blood pressure. Cannulate the femoral vein for intravenous injection. Adjust the pressure of the pressure measuring device to a level corresponding to the normal blood pressure of the animal (usually 13.3-16.0 kPa) and remove the artery clamp. The doses can be given only when the blood pressure of the animal is constant. Injections should be made at uniform rate and at regular intervals of 3-5 minutes depending on the speed at which the blood pressure returns to a constant level. Each injection is followed by a fixed volume of normal saline solution.
Sensitivity test Inject intravenously in turn 3 doses of standard solution corresponding to 0.05 μg, 0.1 μg and 0.15 μg of histamine base per kg of the cat's weight. Repeat the injections for 2-3 times, if the depressor responses to the injections of 0.1 μg/kg are approximately the same and correspond to a fall of blood pressure not less than 2.67 kPa and the responses to the graded doses are clearly discriminated, the sensitivity of the animal is suitable for the test.
Test for injection Let d_S response the dose of 0.1 μg of the histamine base per kg of the cat's weight and d_T the dose of test preparation specified in individual monographs, inject a series of doses in the order of d_S, d_T, d_T, d_S, compare the depressor response caused by the third dose with that caused by the first dose, and the response caused by the second dose with that caused by the fourth dose. The preparation complies with the test if none of the depressor responses caused by d_T is greater than 1/2 of that caused by d_S. If one response caused by d_T is greater than 1/2 of that caused by d_S, inject another series of d_S, d_T, d_T, d_S and compare their responses in the same way. The test preparation complies with the test if none of the depressor responses caused by d_T are greater than that caused by d_S. If it is not the case, repeat the test with another cat. The test preparation fails the test, if in the repeated test one depressor response caused by d_T is greater than that caused by d_S. The animal can further be used for test of depressor substances, if the sensitivity of the animal is still suitable for the test.

Test for Allergic Response

The allergic response of injection being examined is determined by observing the allergic response of test animals injected intraperitoneally with injection tested for sensibilization and challenged intravenously administration.
Animals used in the test should be healthy guinea pigs, weighing 250-350 g, male or non-pregnancy famale. Before and during the test, it should be feed in normal condition. The guinea pigs must be used only once for the test.

Preparation of test solution Unless specified otherwise,

prepare a solution of preparation being examined with suitable concentration specified in the monograph.

Procedure Unless specified otherwise, inject intraperitoneally to each of 6 guinea pigs 0.5 ml of test solution every other day for 3 times to make it sensibilization. After the sensibilization, the guinea pigs are divided into 2 equal groups, each group include 3 guinea pigs. Inject intravenously to each guinea pig 1 ml of the test solution on the 14th and 21st day after first injection for challenge. Observe the syndrome and behavior of animals every day and record the body weights of animals before first injection and challenge. Observe whether allergic response such as piloerection, dyspnea and convulsion occurred in the animals in 30 minutes after challenged.

Evaluation of the results None allergic responses occurred in the test animals in 30 minutes after injection intravenous of test solution. If two or more than two responses including piloerection, sneeze, retch, cough continuously, dyspnea and convulsion, or one of convulsion, shock and death occurred, the test solution must be determined not to comply with the requirements.

Test for Haemolysis and Agglomeration

The test is to observe the effect on red cell by mixing and incubating with test solution and red cell suspension for certain time.

Preparation of 2 percent red cell suspension Introduce about 20 ml of freshly sheep (or rabbit) blood into a flask containing glass pearls, shake the flask about 10 minutes, or stir the blood with a glass rod to remove fibrin. Fill the flask about 10 times more than that of the volume of blood with 0.9% NaCl solution, stir and centrifuge at a speed of 1000-1500 rpm for 15 minutes, remove the supernatant and wash the precipitated red cell with 0.9% NaCl solution 2-3 times by above means until the colour of supernatant is not red. Prepare the 2 percent suspension of red cell with 0.9% NaCl solution.

Preparation of test solution Unless specified otherwise, the injection with non-blood vessel administration should be diluted with 0.9% NaCl solution (1 : 3 v/v) as a test solution. The injection with blood vessel administration should be prepared with specified concentration in the monograph for clinic practice.

Procedure Use 5 clean and labelled tubers, No. 1, 2 tubers are used for test solution, No. 3 tuber for negative control, No. 4 tuber for positive control and No. 5 tuber for test solution control. As showed in the below sheet, add in turns to the tubers with 2 percent red cell suspension, 0.9% NaCl solution or sterile water, mix the solutions and immediately incubate at 37℃ ± 0.5℃ incubator for 3 hours. Observe the haemolysis and agglomeration.

Tubers	1, 2	3	4	5
2% red cell suspension /ml	2.5	2.5	2.5	
0.9% NaCl /ml	2.2	2.5		4.7
Sterile water /ml			2.5	
Test solution /ml	0.3			0.3

If the test solution is red and clear and no cell or a little cell stayed in the bottom of the tuber, haemolysis has occurred. If all of the red cell sank and the supernatant is colourless and clear, or the supernatant is colour and clear, meanwhile no obvious difference between the No. 1 and 5 tubers, no haemolysis has occurred.

If red brown or brown red flocculate precipitation has appeared, which can not be dispersed by shaking, agglomeration has occurred. If the above appearance occurred, it should be determined as true or false agglomeration by using below means. If the flocculate can be dispersed after shaking the tuber, or put the flocculate on a glass slide and add 2 drops of 0.9% NaCl solution at the edge of cover glass and observe the slide under microscopy, if the flocculate can be scattered, the agglomeration is false, otherwise, it is true.

Evaluation of the results When no haemolysis and agglomeration occurred in negative tuber meanwhile haemolysis occurred in the positive tuber, if no haemolysis and agglomeration occurred in the test solution in 3 hours, the injection being tested can be determined to comply with the requirements, otherwise, it does not comply with the requirements.

Test for Pyrogen

See "Test for Pyrogen" (Appendix XIII A).

Test for Bacteria Endotoxins

See "Test for Bacterial Endotoxin" (Appendix XIII D).

INDEX

Index

A

Abalone Shell 33
Aerosols and Sprays A-19
Agkistrodon 3
Aifu Nuangong Pills 337
Aifu Nuangong Wan 337
Akebia Fruit 79
Akebia Stem 22
Albizia Flower 54
Aloe 3
Aloes 3
Alum 4
Alumen 4
American Ginseng 223
Amur cork-tree 47
Angong Niuhuang Pills 339
Angong Niuhuang Powder 338
Angong Niuhuang San 338
Angong Niuhuang Wan 339
Anise Oil 328
Ankun Zanyu Pills 339
Ankun Zanyu Wan 339
Anshen Bunao Mixture 340
Anshen Bunaoye 340
Anshen Buxin Pills 341
Anshen Buxin Wan 341
Anshen Capsules 342
Anshen Jiaonang 342
Antelope Horn 39
Antelope horn Capsules 374
Antifeverile Dichroa Root 199
Anwei Pian 343
Anwei Tablets 343
Anyang Jingzhi Gao 343
Anyang Jingzhi Plaster 343
Anzhong Pian 344
Anzhong tablets 344
Appendiculate Cremastra Pseudobulb or Common Pleione Pseudobulb 182
Arc Shell 33
Areca Peel 173
Areca Seed 285
Argy Wormwood Leaf 68
Arillus Longan 4
Arisaema cum Bile 5
Armand Clematis Stem 23
Arnebia Root 193
Artificial Cow-bezoan 15
Ash Bark 43
Asiatic Cornelian Cherry Fruit 91
Asiatic Moonseed Rhizome 271
Asiatic Moonseed Tablets 664
Asiatic Pennywort Herb 124
Aspongopus 5
Atomic Absorption Spectrophotometry A-35
Atractylodes Rhizome 251
Awei Huapi Gao 345
Awei Huapi Plaster 345
Axillary Choerospondias Fruit 89

B

Babao Kunshun Pills 345
Babao Kunshun Wan 345
Baical Skullcap Root 236
Baidai Pills 346
Baidai Wan 346
Baihe Gujin concentrated pills 348
Baihe Gujin Pills 347
Baihe Gujin Wan 347
Baihe Gujin Wan (Nongsuowan) 348
Bailing Capsules 349
Bailing Jiaonang 349
Baizi Yangxin Pills 350
Baizi Yangxin Wan 350
Bamboo Shavings 23
Banlangen Cha 351
Banlangen Granules 351
Banlangen Keli 351
Banlangen Tea 351
Baochi Powder 351
Baochi San 351
Baofukang Shuan 352
Baofukang Suppositories 352
Baohe Pills 353
Baohe Wan 353
Baohe Wan (Shui wan) 354
Baohe Watered Pills 354
Baoji Pills 355
Baoji Wan 355
Baokening Granules 355
Baokening Keli 355
Baolong Pills 356
Baolong Wan 356
Baphicacanthus Root 265
Barbary Wolfberry Fruit 101
Barbated Skullcup Herb 153
Bawei Chenxiang Powder 357
Bawei Chenxiang San 357
Bawei Qingxin Chenxiang Powder 358
Bawei Qingxin Chenxiang San 358
Bawei Tanxiang Powder 358
Bawei Tanxiang San 358
Bazheng Heji 359
Bazheng Mixture 359
Bazhen Pills 360
Bazhen Wan 360
Bazhen Yimu Pills 361
Bazhen Yimu Wan 361
Beautiful Sweetgum Fruit 100
Beautiful Sweetgum Resin 246
Beeswax 31
Beiling Capsules 362
Beiling Jiaonang 362
Belladonna Extract 320
Belladonna Herb 123
Belladonna Liquid Extract 321
Belladonna Tablets 659
Belladonna Tincture 672
Belleric Terminalia Fruit 112
Belvedere Fruit 99
Benzoin 6
Benzoinum 6
Bergenin 319
Bergeninum 319
Bidouyan Koufuye 362
Bidouyan Mixture 362
Bigflower Rhodiola Root 211
Bile Arisaema 5

Binglang Sixiao Big Honeyed Pills 363
Binglang Sixiao Wan (Damiwan) 363
Binglang Sixiao Wan (Shuiwan) 364
Binglang Sixiao Watered Pills 364
Bingpeng Powder 365
Bingpeng San 365
Biond Magnolia Flower 63
Bistort Rhizome 253
Bitter Apricot Seed 286
Biwen Powder 366
Biwen San 366
Biyan Pian 366
Biyan Tablets 366
Biyuanshu Koufuye 367
Biyuanshu Mixture 367
Black Sesame 301
Blackberrylily Rhizome 252
Blackend Swallowwort Root 203
Black-tail Snake 315
Blister Beetle 169
Boat-fruited Sterculia Seed 302
Bombyx Batryticatus 6
Borneol 7
Borneolum Syntheticum 7
Borneolum (*d*-Borneolum) 7
Boyun Tuiyi Pills 368
Boyun Tuiyi Wan 368
Buckeye Seed 284
Buffalo Horn 37
Buffalo Horn Concentrate 334
Buffer Solutions A-118
Bulbus Allii Macrostemonis 8
Bulbus Fritillariae Cirrhosae 8
Bulbus Fritillariae Hupehensis 9
Bulbus Fritillariae Pallidiflorae 9
Bulbus Fritillariae Thunbergii 10
Bulbus Fritillariae Ussuriensis 11
Bulbus Lilii 11
Bungarus Parvus 12
Bunge Corydalis Herb 130
Bushen Guchi Pills 369
Bushen Guchi Wan 369
Bushen Yinao Pian 369
Bushen Yinao Tablets 369
Buzhong Yiqi Pills 370
Buzhong Yiqi Wan 370
Buzhong Yiqi Wan (Shui Wan) 371
Buzhong Yiqi watered Pills 371

C

Cablin Patch Oils 332
Cablin Patchouli Herb 147
Cacumen Platycladi 13
Cacumen Tamaricis 13
Calcined Gypsum 119
Calculus Bovis 13
Calculus Bovis Artifactus 15
Calculus Bovis Sativus 17
Calomel 20
Calomelas 20
Calyx Kaki 20
Calyx seu Fructus Physalis 20
Can'e gong Bu Pian 373
Can'egong Bu Tablets 373
Canton Love-pea Vine 120
Caoguo 114
Cape Jasmine Fruit 95
Caper Euphorbia Seed 291
Caper Euphorbia Seed Powder 291
Capillary Electrophoresis A-44
Capsulae Cornu Saigae Tataricae 374
Capsulae Extractum Dioscoreae Arthaicae seu Nipponicae 374
Capsulae Gastrodiae 375
Capsulae Olei Viticis Negundo 375
Capsulae Radix Lamiophlomidis Ratatae 376
Capsulae Xylaria 377
Capsules A-11
Carapax et Plastrum Testudinis 21
Carapax Trionycis 21
Carbonized Fineleaf Schizonepeta Herb 152
Carbonized Fineleaf Schizonepeta Spike 308
Carbonized Hair 50
Carbonized Japanese Thistle Herb 127
Carbonized Male Fern Rhizome 265
Cassia Bark 41
Cassia Bark Oil 329
Cassia Seed 288
Cassia Twig 243
Castor Oil 333
Castor Seed 300
Cataplasms A-10
Catclaw Buttercup Root 232
Catechu 22
Cattail Pollen 180
Caulis Akebiae 22
Caulis Bambusae in Taenia 23
Caulis Clematidis Armandii 23
Caulis Dendrobii 24
Caulis Erycibes 24
Caulis Fibraufeae 25
Caulis Lonicerae Japonicae 26
Caulis Mahoniae 26
Caulis Perillae 27
Caulis Piperis Kadsurae 27
Caulis Polygoni Multiflori 28
Caulis Sargentodoxae 28
Caulis Sinomenii 29
Caulis Spatholobi 29
Caulis Trachelospermi 30
Centipede 283
Cera Chinensis 30
Cera Flava 31
Chaihu Koufuye 378
Chaihu Mixture 378
Chaihu Shugan Pills 379
Chaihu Shugan Wan 379
Chanfukang Granules 379
Chanfukang Keli 379
Changweining Pian 380
Changweining Tablets 380
Charred Areca Seed 286
Charred cape Jasmine Fruit 96
Chemical Reference Substances, Reference Drugs and Reference Extractives A-123
Chenxiang Huaqi Pills 381
Chenxiang Huaqi Wan 381
Cherokee Rose Fruit 108
Chicken's Gizzard-skin 50
Chicory herb; Chicory root 125
Chinaroot Greenbrier Rhizome 277
Chinese Angelica 191
Chinese Angelical Liquid Extract 320
Chinese Arborvitae Kernel 299
Chinese Arborvitae Twig and Leaf 13
Chinese Asafetida 245
Chinese Caterpillar Fungus 36
Chinese Cinquefoil 148
Chinese Clematis Root 202
Chinese Clinopodium Granules 441

Chinese Clinopodium Tablets 660
Chinese Cork-tree 48
Chinese Date 98
Chinese Dwarf Cherry Seed 299
Chinese Eaglewood Wood 163
Chinese Gall 116
Chinese Gentian 204
Chinese Holly Leaf 73
Chinese Honeylocust Abnormal Fruit 96
Chinese Honeylocust Spine 308
Chinese Lizardtail Herb 150
Chinese Lobelia Herb 142
Chinese Lovage 266
Chinese Magnoliavine Fruit 109
Chinese Mahonia Stem 26
Chinese Mosla 145
Chinese Pulsatilla Root 231
Chinese Rose Flower 65
Chinese Silkvine Root-bark 47
Chinese Star Anise 81
Chinese Starjasmine Stem 30
Chinese Tamarisk Twig 13
Chinese Taxillus Herb 156
Chinese Thorowax Root 196
Chinese Waxgourd Peel 51
Chinese White Olive 85
Chinese Wolfberry Root-bark 44
Chingma Abutilon Seed 283
Chitong Xiaoyanling Granules 382
Chitong Xiaoyanling Keli 382
Chlorite Schist 162
Christina Loosestrife 143
Chromatography A-37
Chrysanthemun Flower 57
Chuanbei Pipa Syrup 383
Chuanbei Pipa Tangjiang 383
Chuanbei Xueli Concentrated Decoction 384
Chuanbei Xueli Gao 384
Chuanxiong Chatiao Pills 385
Chuanxiong Chatiao Powder 384
Chuanxiong Chatiao San 384
Chuanxiong Chatiao Wan 385
Chuling 181
Chunyang Zhengqi Pills 386
Chunyang Zhengqi Wan 386
Cibot Rhizome 255
Cicada Slough 177
Cinnabar 31
Cinnabaris 31
Citron Fruit 89
Clam Shell 34
Clinopodium Herb 129
Clove 56
Clove Fruit 87
Cluster Mallow Fruit 102
Coastal Glehnia Root 216
Cochinchina Momordica Seed 295
Cochinchinese Asparagus Root 194
Cockcomb Flower 57
Coin-like White-banded Snake 12
Coix Seed 289
Colla Carapax et Plastrum Testudinis 31
Colla Corii Asini 32
Colla Cornus Cervi 33
Coloured Mistletoe Herb 158
Colour of Solution A-72
Column Chromatography A-40
Combined Spicebush Root 220
Common Andrographis Herb 121
Common Andrographis Tablets 659
Common Anemarrhena Rhizome 249
Common Aucklandia Root 196
Common Bletilla Tuber 253
Common Burreed Tuber 278
Common Carpesium Fruit 87
Common Cissampelos Herb 128
Common Clubmoss Herb 143
Common Cnidium Fruit 90
Common Coltsfoot Flower 60
Common Curculigo Rhizome 259
Common Dayflower Herb 130
Common Ducksmeat Herb 155
Common Fenugreek Seed 305
Common Fibraurea Stem 25
Common Floweringqince Fruit 87
Common Heron's Bill Herb, Wilford Granesbill Herb 136
Common Heron's Bill Ointment 680
Common Knotgrass Herb 147
Common Lamiophlomis Root 140
Common Monkshood Mother Root 185
Common Rush 166
Common Scouring Rush Herb 135
Common Selfheal Concentrated Decoction 408
Common Selfheal Fruit-Spike 307
Common Sinopodophyllum Fruit 107
Common St. John'swort Herb 139
Common Vladimiria Root 241
Common Yam Rhizome 261
Compound Berberine Hydrochloride Tablets 420
Compound Caoshanhu Tablets 415
Compound Chuanbeijing Tablets 415
Compound Danshen Dripping Pills 416
Compound Herba Euonymi Mixture 418
Compound Kadsura Extract 421
Compound Qianzheng Plaster 422
Compound Salvia Tablets 417
Compound Yuxingcao Tablets 424
Compound Zaofan Pills 425
Concentrated Decoction of Motherwort Herb 407
Concentrated Decoctions A-8
Concha Arcae 33
Concha Haliotidis 33
Concha Margaritifera 34
Concha Meretricis seu Cyclinae 34
Concha Ostreae 35
Concretio Silicea Bambusae 35
Coral Ardisia Root 192
Cordyceps 36
Coriolus 36
Coriolus Versicolour Sporphore 36
Cornu Bubali 37
Cornu Cervi 37
Cornu Cervi Degelatinatum 38
Cornu Cervi Pantotrichum 38
Cornu Saigae Tataricae 39
Cortex Acanthopanacis 39
Cortex Ailanthi 40
Cortex Albiziae 40
Cortex Cinnamomi 41
Cortex Dictamni 41
Cortex Eucommiae 42
Cortex Fraxini 43
Cortex Illicii 44
Cortex Lycii 44
Cortex Magnoliae Officinalis 44
Cortex Meliae 45
Cortex Mori 45
Cortex Moutan 46
Cortex Periplocae 47
Cortex Phellodendri Amurensis 47

Cortex Phellodendri Chinensis 48
Cortex Pseudolaricis 49
Cow-bezoan Cultured in Vitro 17
Cow-bezoar 13
Cowherb Seed 306
Creeping Euphorbia 137
Crinis Carbonisatus 50
Croton Fruit 92
Cuitang Pills 386
Cuitang Wan 386
Curcuma Oils 329
Cutch, Black Catechu 22
Cuttlebone 50
Cyclovirobuxine D 319
Cyclovirobuxine D Tablets 660
Cyclovirobuxinum D 319

D

Dabuyin Pills 387
Dabuyin Wan 387
Dahuang Qingwei Pills 387
Dahuang Qingwei Wan 387
Dahuang Zhechong Pills 388
Dahuang Zhechong Wan 388
Dahurian Angelica Root 189
Dahurian Rhododendron Leaf 77
Dahurian Rhododendron Syrup 657
Daige Powder 389
Daige San 389
Daiwenjiu Gao 390
Daiwenjiu Plaster 390
Dandelion 156
Danggui Longhui Pills 390
Danggui Longhui Wan 390
Danggui Yangxue Pills 391
Danggui Yangxue Wan 391
Danle Capsules 392
Danle Jiaonang 392
Danning Pian 393
Danning Tablets 393
Danshen Root 213
Danshen Tablets 666
Daochi Pills 394
Daochi Wan 394
Dashanzha Pills 394
Dashanzha Wan 394
Datura Flower 59
Daurian Rhododendron Oil 332
Daurian Rhododendron Oil Soft Capsules 555
Decumbent Corydalis Rhizome 258
Deer Horn (Antler) 37
Deerhorn Glue 33
Defatted Croton Seed Powder 290
Degelatined Deer-horn 38
Dendrobium 24
Dengzhan Xixin Injection 477
Densefruit Pittany Root-bark 41
Desertliving Cistanche 128
Desheng Pills 395
Desheng Wan 395
Determination of Ash A-60
Determination of Cataplasms Adhesion A-81
Determination of Cineol A-70
Determination of Congealing Point A-49
Determination of Disintegration A-78
Determination of Distilling Range A-48
Determination of Ethanol A-62
Determination of Extractives A-70
Determination of Foreign Matter A-54
Determination of Lead (Pb), Cadmium (Cd), Arsenic (As), Mercury (Hg) and Copper (Cu) A-54
Determination of Loss on Drying A-59
Determination of Materials in Injection A-68
Determination of Melting Point A-48
Determination of Methanol A-69
Determination of Nitrogen A-61
Determination of Optical Rotation A-50
Determination of Particle Size A-74
Determination of Pesticides Residue A-64
Determination of pH Value A-50
Determination of Plaster Softening Point A-80
Determination of Refractive Index A-50
Determination of Relative Density A-47
Determination of Residue on Ignition A-60
Determination of Swelling Capacity A-64
Determination of Tanninoids A-70
Determination of Volatile Oil A-71
Determination of Water A-59
Di'ao Xinxuekang Capsules 374
Dieda Huoxue Powder 396
Dieda Huoxue San 396
Dieda Pills 396
Dieda Wan 396
Dieda Zhentong Gao 397
Dieda Zhentong Plaster 397
Difengpi Bark 44
Dingkun Dan 398
Dingkun Pills 398
Disintegration Test for Suppositories and Vaginal Tablets A-79
Divaricate Saposhnikovia Root 234
Dodder Seed 290
Dogbane Leaf 67
Donkey-hide Glue 32
Doubleteeth Pubescent Angelica Root 190
Dragon's Blood 282
Dried Lacquer 246
Dried Tangerine Peel 173
Dripping Pills A-11
Dutchmanspipe Vine 122
Dutohmanspipe Fruit 83
Duyiwei Capsules 376
Dwarf Lilyturf Tuber 221
Dyers Woad Leaf 73

E

Earthworm 178
Emblic Leafflower Fruit 105
Endoconcha Sepiae 50
Endothelium Corneum Gigeriae Galli 50
English Walnut Seed 293
Ephedra 133
Ephedra Root 204
Epimedium Herb 134
Erchen Pills 400
Erchen Wan 400
Erding Granules 400
Erding Keli 400
Erdong Concentrated Decoction 401
Erdong Gao 401
Erkangning Syrup 401
Erkangning Tangjiang 401
Erlong Zuoci Pills 402
Erlong Zuoci Wan 402
Ermiao Pills 403
Ermiao Wan 403
Ershiwuwei Shanhu Pills 404
Ershiwuwei Shanhu Wan 404
Ershiwuwei Songshi Pills 404

Ershiwuwei Songshi Wan 404
Ershiwuwei Zhenzhu Pills 405
Ershiwuwei Zhenzhu Wan 405
Ertong Qingfei Pills 406
Ertong Qingfei Wan 406
Erzhi Pills 407
Erzhi Wan 407
Eucalyptus Oil 330
Eucommia Bark 42
Eucommia Leaf 70
Eupolyphaga seu Steleophaga 51
European Verbena Herb 157
Exocarpium Benincasae 51
Exocarpium Citri Grandis 52
Exocarpium Citri Rubrum 53
Exsiccated Sodium Sulfate 170
Extractum Acanthopanacis Senticosi 320
Extractum Angelicae Liquidum 320
Extractum Belladonnae 320
Extractum Belladonnae Liquidum 321
Extractum Folii Eriobotryae Inspissatum 407
Extractum Folium Ginkgo Siccus 322
Extractum Forsythiae Siccus 323
Extractum Glycyrrhizae 324
Extractum Glycyrrhizae Liquidum 324
Extractum Leonuri Inspissatum 407
Extractum Leonuri Liquidum 325
Extractum Polygalae Liquidum 326
Extractum Prunellae Inspissatum 408
Extractum Rhei Liquidum 326
Extractum Scutellariae Siccus 327
Extractum Zingiberis Liquidum 328

F

Fangfeng Tongsheng Pills 409
Fangfeng Tongsheng Wan 409
Feather Cockscomb Seed 288
Fei'er Pills 409
Fei'er Wan 409
Fenghan Kesou Granules 410
Fenghan Kesou Keli 410
Fengliaoxing Fengshi Dieda Wine 411
Fengliaoxing Fengshi Dieda Yaojiu 411
Fengshi Gutong Capsules 412
Fengshi Gutong Jiaonang 412
Fengshi Maqian Pian 412
Fengshi Maqian Tablets 412
Fennel 93
Fennelflower Seed 296
Fenqing Wulin Pills 413
Fenqing Wulin Wan 413
Fermented Soybean 302
Field Thistle Herb 126
Figwort Root 235
Figwortflower Picrorhiza Rhizome 274
Fimbriate Orostachys Herb 146
Fineleaf Schizonepeta Herb 151
Fineleaf Schizonepeta Spike 307
Finger Citron 90
Flatstem Milkvetch Seed 287
Fleeceflower Root 228
Flos Albiziae 54
Flos Buddlejae 54
Flos Campsis 55
Flos Carthami 55
Flos Caryophylli 56
Flos Celosiae Cristatae 57
Flos Chrysanthemi 57
Flos Chrysanthemi Indici 58
Flos Daturae 59
Flos Eriocauli 59
Flos Farfarae 60
Flos Genkwa 60
Flos Inulae 61
Flos Lonicerae 61
Flos Lonicerae Japonicae 62
Flos Magnoliae 63
Flos Magnoliae Officinalis 63
Flos Mume 64
Flos Rhododendri Mollis 64
Flos Rosae Chinensis 65
Flos Rosae Rugosae 65
Flos Sophorae 65
Fluorite 67
Fluoritum 67
Folium Aconiti Kusnezoffii 67
Folium Apocyni Veneti 67
Folium Artemisiae Argyi 68
Folium Crataegi 69
Folium Eriobotryae 70
Folium et Cacumen Murrayae 70
Folium Eucommiae 70
Folium Ginkgo 71
Folium Ginseng 72
Folium Ilicis Cornutae 73
Folium Isatidis 73
Folium Mori 74
Folium Nelumbinis 75
Folium Perillae 75
Folium Polygoni Tinctorii 76
Folium Pyrrosiae 76
Folium Rhododendri Daurici 77
Folium Sennae 78
Folium Viticis Negundo 79
Forest Frog's Oviduct 172
Fortune Eupatorium Herb 137
Fortune Windmillpalm Petiole 178
Fortune's Drynaria Rhizome 264
Fourleaf Ladybell Root 188
Fourstamen Stephania Root 240
Fragrant Solomonseal Rhizome 277
Franchet Groundcherry Fruit 20
Fresh Ginger 281
Fructus Akebiae 79
Fructus Alpiniae Oxyphyllae 79
Fructus Amomi 80
Fructus Amomi Rotundus 81
Fructus Anisi Stellati 81
Fructus Arctii 82
Fructus Aristolochiae 83
Fructus Aurantii 83
Fructus Aurantii Immaturus 84
Fructus Broussonetiae 85
Fructus Bruceae 85
Fructus Canarii 85
Fructus Cannabis 86
Fructus Carotae 86
Fructus Carpesii 87
Fructus Caryophylli 87
Fructus Chaenomelis 87
Fructus Chebulae 88
Fructus Choerospondiatis 89
Fructus Citri 89
Fructus Citri Sarcodactylis 90
Fructus Cnidii 90
Fructus Corni 91
Fructus Crataegi 91
Fructus Crotonis 92
Fructus Evodiae 93

Hippocampus 159
Hirsute Shiny Bugleweed Herb 142
Hirudo 159
Hogfennel Root 224
Honey 167
Honeycomb 170
Honeysuckle Flower 61
Honeysuckle Flower Extract 750
Honeysuckle Stem 26
Hongling Powder 459
Hongling San 459
Hongyao Plaster 460
Hongyao Tiegao 460
Houtou Jianweiling Capsules 460
Houtou Jianweiling Jiaonang 460
Huaijiao Pills 461
Huaijiao Wan 461
Huaji Koufuye 462
Huaji mixture 462
Huanglian Shangqing Pills 463
Huanglian Shangqing Wan 463
Huanglian Yanggan Pills 465
Huanglian Yanggan Wan 465
Huangshi Xiangsheng Pills 466
Huangshi Xiangsheng Wan 466
Huatuo Zaizao Pills 467
Huatuo Zaizao Wan 467
Huazheng Huisheng Pian 467
Huazheng Huisheng Tablets 467
Huazhi Shuan 468
Huazhi Suppositories 468
Hubei Fritillary Bulb 9
Hufeng Jiu 469
Hufeng Wine 469
Hugan Pian 469
Hugan Tablets 469
Huixiang Juhe Pills 470
Huixiang Juhe Wan 470
Human Placenta 179
Huodan Pills 471
Huodan Wan 471
Huoxiang Zhengqi Koufuye 472
Huoxiang Zhengqi Oral Liquid 472
Huoxiang Zhengqi Ruanjiaonang 473
Huoxiang Zhengqi Shui 474
Huoxiang Zhengqi Soft Capsules 473
Huoxue Zhitong Powder 475
Huoxue Zhitong San 475
Hupo Baolong Pills 476
Hupo Baolong Wan 476
Hydrargyri Oxydum Rubrum 160
Hypoglaucous Collett Yam Rhizome 262

I

Immature Orange Fruit 84
Incised Notopterygium Rhizome or Root 267
Indian Bread 181
Indian Madder Root 212
Indian Quassiawood 243
Indian Trumpetflower Seed 297
Indicator Solutions A-118
Indigo Naturalis 161
Indigoplant Leaf 76
Inductively-Coupled Plasma Mass Spectrometry A-76
Infrared Spectrophotometry A-34
Ingredients of Patent Medicines not Included in the Pharmacopoeia A-26
Injection Herba Erigerontis 477
Injections A-16
Insect Wax 30
Inula Flower 61
Inula Herb 140
Inula Root 218
Isatis Root 218

J

Jack Bean 287
Jackinthepulpit Tuber 250
Japanese Ampelopsis Root 189
Japanese Ardisia Herb 121
Japanese Climbing Fern Spore 309
Japanese Ginseng 272
Japanese Honeysuckle Flower 62
Japanese Pagodatree Pod 112
Japanese Thistle Herb 127
Java Brucea Fruit 85
Jianbu Pills 479
Jianbu Wan 479
Jianmin Yanhou Pian 480
Jianmin Yanhou Tablets 480
Jianpi Pills 480
Jianpi Wan 480
Jianwei Xiaoshi Pian 481
Jianwei Xiaoshi Tablets 481
Jiawei Shenghua Granules 482
Jiawei Shenghua Keli 482
Jiawei Xiaoyao Pills 483
Jiawei Xiaoyao Wan 483
Jiebai Pills 484
Jiebai Wan 484
Jieji Ningsou Pills 485
Jieji Ningsou Wan 485
Jingfukang Granules 485
Jingfukang Keli 485
Jinguo Hanpian 486
Jinguo Tablets 486
Jingzhi Guanxin Granules 487
Jingzhi Guanxin Keli 487
Jingzhi Guanxin Pian 488
Jingzhi Guanxin Tablets 488
Jinpu Capsules 489
Jinpu Jiaonang 489
Jinsang Liyan Pills 490
Jinsang Liyan Wan 490
Jinsang Sanjie Pills 491
Jinsang Sanjie Wan 491
Jinshuibao Capsules 492
Jinshuibao Jiaonang 492
Jinshuibao Pian 493
Jinshuibao Tablets 493
Jisheng Shenqi Pills 493
Jisheng Shenqi Wan 493
Jiufen Powder 494
Jiufen San 494
Jiuqi Niantong Pills 495
Jiuqi Niantong Wan 495
Jiusheng Powder 496
Jiusheng San 496
Jiuwei Qianghuo Granules 496
Jiuwei Qianghuo Keli 496
Jiuwei Qianghuo Koufuye 497
Jiuwei Qianghuo Mixture 497
Jiuwei Qianghuo Pills 498
Jiuwei Qianghuo Wan 498
Jiuwei Shihuihua Powder 499
Jiuwei Shihuihua San 499
Jiuyi Powder 499
Jiuyi San 499

Jizhi Syrup 500
Jizhi Tangjiang 500
Juanxiao Pian 501
Juanxiao Tablets 501
Jufang Zhibao Powder 502
Jufang Zhibao San 502
Juhong Pills 503
Juhong Tanke Mixture 502
Juhong Tanke Ye 502
Juhong Wan 503

K

Kadsura Pepper Stem 27
Kaixiong Shunqi Pills 504
Kaixiong Shunqi Wan 504
Kanggan Granules 505
Kanggan Keli 505
Kanggu Zengsheng Capsules 506
Kanggu Zengsheng Jiaonang 506
Kanggu Zengsheng Pills 506
Kanggu Zengsheng Wan 506
Kanli Coarse Powder 507
Kanlisha 507
Katsumada Galangal Seed 285
Kelp or Tangle 313
Keshangtong Chaji 507
Keshangtong Liniment 507
Knoxia Root 219
Kongxian Pills 508
Kongxian Wan 508
Kouyanqing Granules 508
Kouyanqing Keli 508
Kudzuvine Root 230
Kunming Shanhaitang Tablets 668
Kusnezoff Monkshood Leaf 67
Kusnezoff Monkshood Root 186

L

Lalang Grass Rhizome 270
Langchuang Pills 510
Langchuang Wan 510
Lapis Chloriti 162
Lapis Micae Aureus 162
Largehead Atractylodes Rhizome 251
Largeleaf Gentian Root 216
Largeleaf Japanese Ginseng Rhizome 272
Largetrifoliolious Bugbane Rhizome 256
Lasiosphaera seu Calvatia 162
Leech 159
Lemai Granules 511
Lemai Keli 511
Lesser Galangal Rhizome 248
Liangfu Pills 511
Liangfu Wan 511
Lidan Paishi Pian 512
Lidan Paishi Tablets 512
Lightyellow Sophora Root 237
Lignum Aquilariae Resinatum 163
Lignum Dalbergiae Odoriferae 163
Lignum Santali Albi 164
Lignum Sappan 164
Lilac Daphne Flower Bud 60
Lilac Pink Herb 132
Lily Bulb 11
Limit Test for Arsenic A-58
Limit Test for Chlorides A-56
Limit Test for Heavy Metals A-57
Limit Test for Iron A-57
Limit Tests of Rancidity A-64
Limonite 165
Limonitum 165
Lingbao Huxin Dan 513
Lingbao Huxin Pills 513
Lingyang Ganmao Pian 514
Lingyang Ganmao tablets 514
Lingyang Qingfei Pills 515
Lingyang Qingfei Wan 515
Liniments, Lotions, Smeared films A-17
Linseed 294
Liquid Extract of Motherwort Herb 325
Liquid Extracts and Extracts A-13
Liquor Leonuri 516
Liquor Sarcandrae 516
Liquorice Extract 324
Liquorice Liquid Extract 324
Liquorice Root 207
Liriope Root Tuber 220
Liuhe Dingzhong Pills 517
Liuhe Dingzhong Wan 517
Liuwei Anxiao Powder 518
Liuwei Anxiao San 518
Liuwei Dihuang Granules 519
Liuwei Dihuang Keli 519
Liuwei Dihuang Pills 519
Liuwei Dihuang Wan 519
Liuwei Muxiang Powder 520
Liuwei Muxiang San 520
Liuying Pills 521
Liuying Wan 521
Liuyi Powder 522
Liuyi San 522
Liyan Jiedu Granules 523
Liyan Jiedu Keli 523
Longan Aril 4
Longdan Xiegan Pills (Big Honeyed pills) 524
Longdan Xiegan Wan (Damiwan) 524
Longdan Xiegan Pills (Watered pills) 524
Longdan Xiegan Wan (Shuiwan) 524
Longmu Zhuanggu Granules 525
Longmu Zhuanggu Keli 525
Long Pepper 106
Longqing Pian 526
Longqing Tablets 526
Longstamen Onion Bulb 8
Longtube Ground Ivy Herb 138
Long-nosed Pit Viper 3
Lophatherum Herb 142
Loquat Leaf 70
Loquat Leaf Concentrated Decoction 407
Lotus Leaf 75
Lotus Plumule 179
Lotus Receptacle 245
Lotus Rhizome Node 171
Lotus Seed 296
Lotus Stamen 310
Luffa Vegetable Sponge 246
Lusika Pills 527
Lusika Wan 527
Lychee Seed 294

M

Magnetite 165
Magnetitum 165
Maiwei Dihuang Pills 528
Maiwei Dihuang Wan 528
Malaytea Scurfpea Fruit 107
Male Fern Rhizome 264

Manchurian Wildginger root 201
Mantis Egg-Case 172
Manyinflorescenced Sweetvetch Root 217
Manyprickle Acanthopanax 214
Manyprickle Acanthopanax Extract 320
Manyprickle Acanthopanax Tablets 658
Maqianzi Powder 529
Maqianzi San 529
Maren Pills 530
Maren Runchang Pills 529
Maren Runchang Wan 529
Maren Wan 530
Margarita 166
Mayinglong Shexiang Zhichuang Gao 531
Mayinglong Shexiang Zhichuang Ointments 531
Medicinal Changium Root 197
Medicinal Cyathula Root 199
Medicinal Distillates A-14
Medicinal Evodia Fruit 93
Medicinal Teas A-15
Medicinal Wines A-12
Medicine Terminalia Fruit 88
Medulla Junci 166
Medulla Stachyuri Medulla Helwingiae 166
Medulla Tetrapanacis 167
Meihua Dianshe Pills 532
Meihua Dianshe Wan 532
Mel 167
Mengshi Guntan Pills 533
Mengshi Guntan Wan 533
Menthol 328
Mentholum 328
Miaoji Pills 533
Miaoji Wan 533
Mica-schist 162
Microbial Limit Tests A-87
Microscopical Identification A-22
Mile Swertia Herb 155
Mile Swertia Tablets 668
Milkvetch Root 194
Millet Sprout 111
Mingmu Dihuang Pills 534
Mingmu Dihuang Wan 534
Minimum Fill A-80
Mirabilite Preparation 168
Mirabilitum Praeparatum 168
Mixtures A-11
Morinda Root 221
Moschus 168
Motherwort Fruit 99
Motherwort Herb 141
Motherwort Herb Mixture 516
Mountain Spicy Fruit 101
Mugua Pills 535
Mugua Wan 535
Mulberry Fruit 103
Mulberry Leaf 74
Mulberry Twig 244
Murraya Jasminorage 70
Musk 168
Muskroot-like Semiaquilegia Root 237
Mustard Seed 301
Muxiang Binglang Pills 536
Muxiang Binglang Wan 536
Muxiang Fenqi Pills 537
Muxiang Fenqi Wan 537
Mylabris 169

N

Nacre 34
Names, Symbols and Atomic Weights of Elements A-130
Naodesheng Pian 538
Naodesheng Pills 538
Naodesheng Tablets 538
Naodesheng Wan 538
Naolejing 539
Naolejing Syrup 539
Naoliqing Pills 540
Naoliqing Wan 540
Nardostachys Root 209
Nasal Preparations A-18
Natrii Sulfas 170
Natrii Sulfas Exsiccatus 170
Natural Borneol 7
Natural Indigo 161
Negundo Chastetree Oil 334
Negundo Chastetree Oil Capsules 375
Nidus Vespae 170
Nippon Yam Rhizome 262
Niuhuang Baolong Pills 541
Niuhuang Baolong Wan 541
Niuhuang jiangya Capsules 541
Niuhuang Jiangya Jiaonang 541
Niuhuang Jiangya Pills 542
Niuhuang Jiangya Wan 542
Niuhuang Jiedu Pian 544
Niuhuang Jiedu Pills 545
Niuhuang Jiedu Tablets 544
Niuhuang Jiedu Wan 545
Niuhuang Qianjin Powder 546
Niuhuang Qianjin San 546
Niuhuang Qingxin Pills 547
Niuhuang Qingxin Wan 547
Niuhuang Shangqing Capsules 548
Niuhuang Shangqing Jiaonang 548
Niuhuang Shangqing Pills 549
Niuhuang Shangqing Wan 549
Niuhuang Xiaoyan Pian 550
Niuhuang Xiaoyan Tablets 550
Niuhuang Zhenjing Pills 551
Niuhuang Zhenjing Wan 551
Niuhuang Zhibao Pills 552
Niuhuang Zhibao Wan 552
Nodus Nelumbinis Rhizomatis 171
Non-aqueous Titration A-53
Nuanqi Gao 553
Nuanqi Plaster 553
Nutgrass Galingale Rhizome 261
Nutmeg 295
Nux Prinsepiae 171
Nux Vomica 303
Nux Vomica Powder 303
Nüjin Pills 553
Nüjin Wan 553

O

Obscured Homalomena Rhizome 269
Obtuseleaf Erycibe Stem 24
Ocimum Oil 331
Officinal Magnolia Bark 44
Officinal Magnolia Flower 63
Ointments A-14
Oleum Anisi Stellati 328
Oleum Camelliae 329
Oleum Cinnamomi 329

Oleum Curcumae 329
Oleum Eucalypti 330
Oleum Linderae 330
Oleum Menthae Dementholatum 330
Oleum Ocimi Gratissimi 331
Oleum Pogostemonis 332
Oleum Rhododendri Daurici 332
Oleum Ricini 333
Oleum Sesami 333
Oleum Terebinthinae 333
Oleum Viticis Negundo 334
Omphalia 172
Ophicalcite 172
Ophicalcitum 172
Ophthalmic Preparations A-18
Orange Fruit 83
Oriental Waterplantain Rhizome 248
Orientvine Stem 29
Oviductus Ranae 172
Oyster Shell 35
Oötheca Mantidis 172

P

Pagodatree Flower 65
Paishi Granules 554
Paishi Keli 554
Pale Butterflybush Flower 54
Palmleaf Raspberry Fruit 109
Pangolin Scales 309
Paniculate Bolbostemma 254
Paniculate Swallowwort Root 203
Paper Chromatography A-37
Papermulberry Fruit 85
Paris Root 273
Peach Seed 297
Pearl 166
Peking Euphorbia Root 215
Pepper Fruit 105
Peppermint 144
Peppermint Oil 330
Pepperweed Seed 293
Pericarpium Arecae 173
Pericarpium Citri Reticulatae 173
Pericarpium Citri Reticulatae Viride 174
Pericarpium Granati 175
Pericarpium Papaveris 176
Pericarpium Trichosanthis 176
Pericarpium Zanthoxyli 177
Perilla Fruit 105
Perilla Leaf 75
Perilla Stem 27
Periostracum Cicadae 177
Periostracum Serpentis 178
Persimmon Calyx 20
Petiolus Trachycarpi 178
Pharbitis Seed 297
Pheretima 178
Pig Gall Acidic Extract 392
Pig Gall Powder 183
Pills A-5
Pilose Antler 38
Pilulae Olei Rhododendri Daurici 555
Pilulae Siegesbeckiae 555
Pine Pollen 180
Pinellia Tuber 275
Pinggan Shuluo Pills 555
Pinggan Shuluo Wan 555
Pipefish 312
Pipewort Flower 59
Placenta Hominis 179
Plantain Herb 146
Plantain Seed 299
Plasters A-13
Platycodon Root 227
Plum Flower 64
Plumula Nelumbinis 179
Pokeberry Root 226
Pollen Pini 180
Pollen Typhae 180
Polyporus 181
Pomegranate Rind 175
Poppy Capsule 176
Poria 181
Potentiometric Titration and Dead-stop Titration A-52
Powders A-6
Prepared Common Monkshood Daughter Root 187
Prepared Common Monkshood Mother Root 188
Prepared Dried Ginger 281
Prepared FLeeceflower Root 229
Prepared Kusnezoff Monkshood Root 186
Prepared Liauorice Root 208
Prepared Manyinflorescenced Sweetvetch Root 217
Prepared Milkvetch Root 195
Prepared Pinellia Tuber 275
Prepared Rehmannia Root 233
Pricklyash Peel 177
Prince's-feather Fruit 107
Propolis 182
Pseudobulbus Cremastrae seu Pleiones 182
Puff-ball 162
Pulvis Cornus Bubali Concentratus 334
Pulvis Fellis Suis 183
Pulvis Talci 184
Pummelo Peel 52
Puncturevine Caltrop Fruit 113
Purslane Herb 148
Pyrite 184
Pyritum 184
Pyrola Herb 149

Q

Qianbai Biyan Pian 557
Qianbai Biyan Tablets 557
Qiangyang Baoshen Pills 557
Qiangyang Baoshen Wan 557
Qianjin Zhidai Pills (big honeyed pills) 558
Qianjin Zhidai Pills (Watered pills) 558
Qianjin Zhidai Wan (Damiwan) 558
Qianjin Zhidai Wan (Shuiwan) 558
Qianlieshu Pills 559
Qianlieshu Wan 559
Qibao Meiran Granules 560
Qibao Meiran Keli 560
Qiju Dihuang Pills 560
Qiju Dihuang Wan 560
Qili Powder 562
Qili San 562
Qinbaohong Zhike Pian 562
Qinbaohong Zhike Tablets 562
Qing'e Pills 563
Qing'e Wan 563
Qingfei xiaoyan Pills 564
Qingfei Xiaoyan Wan 564
Qingfei Yihuo Pills 564
Qingfei Yihuo Wan 564
Qingguo Pills 566
Qingguo Wan 566
Qinghou Liyan Granules 567

Qinghou Liyan Keli 567
Qinghouyan Heji 568
Qinghouyan Mixture 568
Qinghuozhimai Pian 569
Qinghuozhimai Tablets 569
Qingkailing Injection 571
Qingkailing Koufuye 570
Qingkailing Mixture 570
Qingkailing Zhusheye 571
Qinglin Granules 573
Qinglin Keli 573
Qingnao Jiangya Pian 574
Qingnao Jiangya Tablets 574
Qingning Pills 574
Qingning Wan 574
Qingqi Huatan Pills 575
Qingqi Huatan Wan 575
Qingre Jiedu Koufuye 575
Qingre Jiedu Mixture 575
Qingwei Huanglian Pills (Big Honeyed Pills) 577
Qingwei Huanglian Pills (watered pills) 578
Qingwei Huanglian Wan (Damiwan) 577
Qingwei Huanglian Wan (Shuiwan) 578
Qingwen Jiedu Pills 579
Qingwen Jiedu Wan 579
Qingxuan Pills 580
Qingxuan Wan 580
Qingyan Pills 580
Qingyan Wan 580
Qingyin Pills 581
Qingyin Wan 581
Qinlian Pian 582
Qinlian Tablets 582
Qipi Pills 583
Qipi Wan 583
Qishiwei Zhenzhu Pills 584
Qishiwei Zhenzhu Wan 584
Qiwei Duqi Pills 585
Qiwei Duqi Wan 585
Qiwei Guangzao Pills 586
Qiwei Guangzao Wan 586
Qiwei Ketengzi Pills 586
Qiwei Ketengzi Wan 586
Qiwei Putao Powder 587
Qiwei Putao San 587
Qiwei Tiexie Pills 588
Qiwei Tiexie Wan 588
Qiye Shen'an Pian 589
Qiye Shen'an Tablets 589
Qizhen Pills 589
Qizhen Wan 589
Qizhi Weitong Granules 590
Qizhi Weitong Keli 590
Qufeng Shujin Pills 591
Qufeng Shujin Wan 591
Qufeng Zhitong Pian 591
Qufeng Zhitong Tablets 591

R

Radde Anemone Rhizome 249
Radish Seed 300
Radix Achyranthis Bidentatae 185
Radix Aconiti 185
Radix Aconiti Kusnezoffii 186
Radix Aconiti Kusnezoffii Praeparata 186
Radix Aconiti Lateralis Praeparata 187
Radix Aconiti Praeparata 188
Radix Adenophorae 188
Radix Ampelopsis 189
Radix Angelicae Dahuricae 189
Radix Angelicae Pubescentis 190
Radix Angelicae Sinensis 191
Radix Ardisiae Crenatae 192
Radix Arnebiae 193
Radix Asparagi 194
Radix Astragali 194
Radix Astragali Praeparata cum Melle 195
Radix Aucklandiae 196
Radix Bupleuri 196
Radix Changii 197
Radix Codonopsis 197
Radix Curcumae 198
Radix Cyathulae 199
Radix Dichroae 199
Radix Dipsaci 200
Radix Echinopsis 201
Radix et Rhizoma Asari 201
Radix et Rhizoma Asteris 201
Radix et Rhizoma Clematidis 202
Radix et Rhizoma Cynanchi Atrati 203
Radix et Rhizoma Cynanchi Paniculati 203
Radix et Rhizoma Ephedrae 204
Radix et Rhizoma Gentianae 204
Radix et Rhizoma Ginseng 205
Radix et Rhizoma Ginseng Rubra 206
Radix et Rhizoma Glycyrrhizae 207
Radix et Rhizoma Glycyrrhizae Praeparata cum Melle 208
Radix et Rhizoma Nardostachyos 209
Radix et Rhizoma Notoginseng 209
Radix et Rhizoma Rhei 210
Radix et Rhizoma Rhodiolae Crenulatae 211
Radix et Rhizoma Rubiae 212
Radix et Rhizoma Salviae Miltiorrhizae 213
Radix et Rhizoma seu Caulis Acanthopanacis Senticosi 214
Radix et Rhizoma Sophorae Tonkinensis 215
Radix Euphorbiae Pekinensis 215
Radix Gentianae Macrophyllae 216
Radix Glehniae 216
Radix Hedysari 217
Radix Hedysari Praeparata cum Melle 217
Radix Inulae 218
Radix Isatidis 218
Radix Kansui 219
Radix Knoxiae 219
Radix Linderae 220
Radix Liriopes 220
Radix Morindae Officinalis 221
Radix Ophiopogonis 221
Radix Paeoniae Alba 222
Radix Paeoniae Rubra 223
Radix Panacis Quinquefolii 223
Radix Peucedani 224
Radix Physochlainae 225
Radix Phytolaccae 226
Radix Platycodonis 227
Radix Polygalae 227
Radix Polygoni Multiflori 228
Radix Polygoni Multiflori Praeparata cum Succo Glycines Sotae 229
Radix Pseudostellariae 229
Radix Puerariae Lobatae 230
Radix Puerariae Thomsonii 231
Radix Pulsatillae 231
Radix Ranunculi Ternati 232
Radix Rehmanniae 232
Radix Rehmanniae Praeparata 233
Radix Rhapontici 233
Radix Sanguisorbae 234
Radix Saposhnikoviae 234

Radix Scrophulariae 235
Radix Scutellariae 236
Radix Semiaquilegiae 237
Radix Sophorae Flavescentis 237
Radix Stellariae 238
Radix Stemonae 239
Radix Stephaniae Tetrandrae 240
Radix Tinosporae 240
Radix Trichosanthis 241
Radix Vladimiriae 241
Radix Zanthoxyli 242
Ramulus Cinnamomi 243
Ramulus et Folium Picrasmae 243
Ramulus Mori 244
Ramulus Uncariae cum Uncis 244
Rangooncreeper Fruit 108
Reagents A-100
Realgar 244
Receptaculum Nelumbinis 245
Red Ginseng 206
Red Halloysite 119
Red Mercuric Oxide 160
Red Peony Root 223
Red Tangerine Peel 53
Reed Rhizome 274
Rehmannia Root 232
Renqing Changjue 592
Renqing Changjue Pills 592
Renqing Mangjue 593
Renqing Mangjue Pills 593
Renshen Jianpi Pills 594
Renshen Jianpi Wan 594
Renshen Yangrong Pills 595
Renshen Yangrong Wan 595
Renshen Zaizao Pills 597
Renshen Zaizao Wan 597
Resina Ferulae 245
Resina Liquidambaris 246
Resina Toxicodendri 246
Retinervus Luffae Fructus 246
Reyanning Granules 598
Reyanning Keli 598
Rhizoma Acori Calami 247
Rhizoma Acori Tatarinowii 247
Rhizoma Alismatis 248
Rhizoma Alpiniae Officinarum 248
Rhizoma Anemarrhenae 249
Rhizoma Anemones Raddeanae 249
Rhizoma Arisaematis 250
Rhizoma Atractylodis 251
Rhizoma Atractylodis Macrocephalae 251
Rhizoma Belamcandae 252
Rhizoma Bistortae 253
Rhizoma Bletillae 253
Rhizoma Bolbostematis 254
Rhizoma Chuanxiong 254
Rhizoma Cibotii 255
Rhizoma Cimicifugae 256
Rhizoma Coptidis 256
Rhizoma Corydalis 257
Rhizoma Corydalis Decumbentis 258
Rhizoma Curculiginis 259
Rhizoma Curcumae 260
Rhizoma Curcumae Longae 260
Rhizoma Cyperi 261
Rhizoma Dioscoreae 261
Rhizoma Dioscoreae Hypoglaucae 262
Rhizoma Dioscoreae Nipponicae 262
Rhizoma Dioscoreae Septemlobae 263
Rhizoma Drynariae 264
Rhizoma Dryopteridis Crassirhizomatis 264
Rhizoma Dryopteridis Crassirhizomatis Carbonisatum 265
Rhizoma et Radix Baphicacanthis Cusiae 265
Rhizoma et Radix Cynanchi Stauntonii 266
Rhizoma et Radix Ligustici 266
Rhizoma et Radix Notopterygii 267
Rhizoma et Radix Polygoni Cuspidati 267
Rhizoma Fagopyri Dibotryis 268
Rhizoma Gastrodiae 269
Rhizoma Homalomenae 269
Rhizoma Imperatae 270
Rhizoma Iridis Tectori 270
Rhizoma Kaempferiae 271
Rhizoma Menispermi 271
Rhizoma Panacis Japonici 272
Rhizoma Panacis Majoris 272
Rhizoma Paridis 273
Rhizoma Phragmitis 274
Rhizoma Picrorhizae 274
Rhizoma Pinelliae 275
Rhizoma Pinelliae Praeparatum 275
Rhizoma Polygonati 276
Rhizoma Polygonati Odorati 277
Rhizoma Smilacis Chinae 277
Rhizoma Smilacis Glabrae 278
Rhizoma Sparganii 278
Rhizoma Typhonii 279
Rhizoma Wenyujin Concisum 279
Rhizoma Zingiberis 280
Rhizoma Zingiberis Praeparatum 281
Rhizoma Zingiberis Recens 281
Rhubarb 210
Rhubarb Liquid Extract 326
Rice Bean 298
Ricepaperplant Pith 167
Rice-grain Sprout 104
Roof Iris Rhizome 270
Rose Flower 65
Rosewood 163
Round Cardamon Fruit 81
Rujiling Granules 599
Rujiling Keli 599
Rukuaixiao Pian 600
Rukuaixiao Tablets 600
Rupixiao Pian 601
Rupixiao Tablets 601
Ruyi Jinhuang Powder 602
Ruyi Jinhuang San 602

S

Safflower 55
Saffron 310
Sampling of Crude Drugs A-21
Sanbao Capsules 603
Sanbao Jiaonang 603
Sanchi 209
Sandalwood 164
Sangju Ganmao Pian 604
Sangju Ganmao Tablets 604
Sanguis Draconis 282
Sanhuang Pian 605
Sanhuang Tablets 605
Sanjin Pian 606
Sanjin Tablets 606
Sanliangban Wine 607
Sanliangban Yaojiu 607
Sanmiao Pills 608
Sanmiao Wan 608
Sanqi Pian 608

Sanqi Shangyao Pian 609
Sanqi Shangyao Tablets 609
Sanqi Tablets 608
Sanwei Jili Powder 610
Sanwei Jili San 610
Sanzi Powder 610
Sanzi San 610
Sappan Wood 164
Sargassum 282
Sargentgloryvine Stem 28
Scolopendra 283
Scorpio 283
Scorpion 283
Seabuckthorn Fruit 97
Sea Horse 159
Seaweed 282
Semen Abutili 283
Semen Aesculi 284
Semen Allii Tuberosi 284
Semen Alpiniae Katsumadai 285
Semen Arecae 285
Semen Arecae Praepareta 286
Semen Armeniacae Amarum 286
Semen Astragali Complanati 287
Semen Canavaliae 287
Semen Cassiae 288
Semen Celosiae 288
Semen Citri Reticulatae 289
Semen Coicis 289
Semen Crotonis Pulveratum 290
Semen Cuscutae 290
Semen Descurainiae 293
Semen Euphorbiae 291
Semen Euphorbiae Pulveratum 291
Semen Euryales 291
Semen Ginkgo 292
Semen Hyoscyami 292
Semen Impatientis 293
Semen Juglandis 293
Semen Lablab Album 293
Semen Lepidii 293
Semen Lini 294
Semen Litchi 294
Semen Momordicae 295
Semen Myristicae 295
Semen Nelumbinis 296
Semen Nigellae 296
Semen Oroxyli 297
Semen Persicae 297
Semen Pharbitidis 297
Semen Phaseoli 298
Semen Plantaginis 299
Semen Platycladi 299
Semen Pruni 299
Semen Raphani 300
Semen Ricini 300
Semen Sesami Nigrum 301
Semen Sinapis 301
Semen Sojae Praeparatum 302
Semen Sterculiae Lychnophorae 302
Semen Strychni 303
Semen Strychni Pulveratum 303
Semen Torreyae 304
Semen Trichosanthis 304
Semen Trichosanthis Tostum 304
Semen Trigonellae 305
Semen Vaccariae 306
Semen Ziziphi Spinosae 306
Senna Leaf 78
Sesame Oil 333
Sevenlobed Yam Rhizome 263
Shangshi Zhitong Gao 611
Shangshi Zhitong Plaster 611
Shangtongning Pian 611
Shangtongning Tablets 611
Shanju Jiangya Pian 612
Shanju Jiangya Tablets 612
Shanzha Huazhi Pills 613
Shanzha Huazhi Wan 613
Shaofu Zhuyu Pills 614
Shaofu Zhuyu Wan 614
Shaolin Fengshi Dieda Gao 614
Shaolin Fengshi Dieda Plaster 614
Shaoshangling Ding 615
Shaoshangling Tincture 615
Sharpleaf Glangal Fruit 79
Shayao 616
Shayao Pills 616
Shearer's Pyrrosia Leaf 76
Shedan Chenpi Powder 617
Shedan Chenpi San 617
Shedan Chuanbei Powder 617
Shedan Chuanbei San 617
Shengmai Yin 618
Shengmai Yin Oral Liquid 618
Shenqi Wuweizi Pian 620
Shenqi Wuweizi Tablets 620
Shengxue Pills 618
Shengxue Wan 618
Shenjing Zhike Pills 619
Shenjing Zhike Wan 619
Shenling Baizhu Powder 620
Shenling Baizhu San 620
Shenrong Baifeng Pills 621
Shenrong Baifeng Wan 621
Shenrong Baotai Pills 622
Shenrong Baotai Wan 622
Shenrong Guben Pian 622
Shenrong Guben Tablets 622
Shensu Pills 623
Shensu Wan 623
Shexiang Baoxin Pills 624
Shexiang Baoxin Wan 624
Shexiang Qutong Aerosol 626
Shexiang Qutong Chaji 625
Shexiang Qutong Liniment 625
Shexiang Qutong Qiwuji 626
Shexiang Zhichuang Shuan 627
Shexiang Zhichuang Suppositories 627
Shidi Shui 627
Shidi Tincture 627
Shidishui Ruanjiaonang 628
Shidishui Soft Capsules 628
Shi'erwei Yishou Powder 629
Shi'erwei Yishou San 629
Shihu Yeguang Pills 629
Shihu Yeguang Wan 629
Shiliuwei Dongqing Pills 631
Shiliuwei Dongqing Wan 631
Shinyleaf Pricklyash Root 242
Shiquan Dabu Pills 632
Shiquan Dabu Wan 632
Shisanwei Bangga Powder 633
Shisanwei Bangga San 633
Shiwuwei Chenxiang Pills 633
Shiwuwei Chenxiang Wan 633
Shixiang Fansheng Pills 634
Shixiang Fansheng Wan 634
Shixiang Zhitong Pills 635
Shixiang Zhitong Wan 635

Shiyiwei Nengxiao Pills 636
Shiyiwei Nengxiao Wan 636
Shortscape Fleabane Herb 135
Shouwu Pills 637
Shouwu Wan 637
Shrub Chastetree Fruit 115
Shuangdan Koufuye 638
Shuangdan Mixture 638
Shuanghuanglian for Injection 786
Shuanghuanglian Granule 638
Shuanghuanglian Keli 638
Shuanghuanglian Koufuye 639
Shuanghuanglian Mixture 639
Shuanghuanglian Pian 640
Shuanghuanglian Shuan 641
Shuanghuanglian Suppositories 641
Shuanghuanglian Tablets 640
Shufeng Dingtong Pills 642
Shufeng Dingtong Wan 642
Shugan Hewei Pills 643
Shugan Hewei Wan 643
Shugan Pills 644
Shugan Wan 644
Shujin Huoluo Jiu 645
Shujin Huoluo Wine 645
Shujin Pills 645
Shujin Wan 645
Shuxin Koufuye 646
Shuxin Mixture 646
Shuxiong Pian 647
Shuxiong Tablets 647
Shuzheng Pian 648
Shuzheng Tablets 648
Siberian Cocklebur Fruit 115
Siegesbeckia Herb 154
Siegesbeckia Pills 555
Sijunzi Pills 648
Sijunzi Wan 648
Silktree Albizia Bark 40
Sini Mixture 649
Sini Tang 649
Sinkiang Fritillary Bulb 9
Sishen Pills 650
Sishen Wan 650
Siwei Tumuxiang Powder 651
Siwei Tumuxiang San 651
Siwei Zhenceng Bingpeng Diyanye 651
Siwei Zhenceng Bingpeng Eye Drops 651
Siwu Heji 652
Siwu Mixture 652
Sizheng Pills 653
Sizheng Wan 653
Slenderstyle Acanthopanax Bark 39
Small Centipeda Herb 125
Smoked Plum 104
Snake Slough 178
Snakegourd Fruit 114
Snakegourd Peel 176
Snakegourd Root 241
Snakegourd Seed 304
Snow Lotus Herb 151
Snowbellleaf Tickclover Herb 131
Snowbellleaf Tickclover Tablets 661
Sodium Sulfate 170
Solomonseal Rhizome 276
Songaria Cynomorium Herb 131
Songling Xuemaikang Capsules 654
Songling Xuemaikang Jiaonang 654
Southern Magnoliavine Fruit 110
Spectrophotometry A-33
Spica Prunellae 307
Spica Schizonepetae 307
Spica Schizonepetae Carbonisata 308
Spiceleaf Kernel Oil 330
Spikemoss 154
Spina Gleditsiae 308
Spine Date Seed 306
Spora Lygodii 309
Squama Manis 309
Stachyurus or Japanese Helwingia Pith 166
Stalactite 309
Stalactitum 309
Stamen Nelumbinis 310
Starwort Root 238
Stemona Root 239
Sterilisation A-127
Stiff Silkworm 6
Stigma Croci 310
Stink-bug 5
Stir-baking Snakegourd seed 304
Storax 311
Stringy Stonecrop Herb 153
Styrax 311
Suberect Spatholobus Stem 29
Suhexiang Pills 655
Suhexiang Wan 655
Sulfur 311
Suoyang Gujing Pills 656
Suoyang Gujing Wan 656
Suppositories A-17
Sweet Wormwood Herb 123
Syngnathus 312
Syrups A-9
Syrups Rhododendri Daurici 657
Szechwan Chinaberry Bark 45
Szechwan Chinaberry Fruit 113
Szechwan Lovage Rhizome 254

T

Tabasheer 35
Tabellae Acanthopanacis Senticosi 658
Tabellae Andrographitis 659
Tabellae Belladonnae 659
Tabellae Clinopodii 660
Tabellae Cyclovirobuxinum D 660
Tabellae Desmodii Styracifolii 661
Tabellae Folium Crataegi 662
Tabellae Folium Ginkgo 663
Tabellae Menispermi 664
Tabellae Physochlainae 664
Tabellae Puerariae 665
Tabellae Rhei Preparata 666
Tabellae Salviae Miltiorrhizae 666
Tabellae Sarcandra glabra 667
Tabellae Swertiae Mileensis 668
Tabellae Tripterygii Hypoglauci 668
Tablets A-7
Talc 313
Talc Powder 184
Talcum 313
Tall gastrodia capsules 375
Tall Gastrodia Tuber 269
Tangerine Seed 289
Tangshen 197
Tansymustard Seed 293
Tatarian Aster Root 201
Tea-seed Oil 329
Tendrilleaf Fritillary Bulb 8
Test for Bacterial Endotoxin A-95

Test for Particulate Matter in Injections A-66
Test for Pyrogens A-83
Test for Sterility A-83
Test for Visible Particles A-74
Test Papers A-117
Test Solutions A-113
Tests of Fats and Fatty Oils A-62
Thallus Laminariae Thallus Eckloniae 313
The Processing of Crude Drugs A-24
Thinleaf Milkwort Liquid Extract 326
Thinleaf Milkwort Root 227
Thinleaf Milkwort Tincture 673
Thin-Layer Chromatography A-38
Thomson Kudzuvine Root 231
Thunberg Fritillary Bulb 10
Thunder Ball 172
Tianma Pills 670
Tianma Shouwu Pian 669
Tianma Shouwu Tablets 669
Tianma Wan 670
Tianwang Buxin Pills 671
Tianwang Buxin Wan 671
Tiaojing Cuyun Pills 671
Tiaojing Cuyun Wan 671
Tibet Sweetflag Rhizome 247
Tinctura Belladonnae 672
Tinctura Polygalae 673
Tinctura Zingiberis 673
Tinctures A-12
Tinospora Root 240
Toad Venom 314
Tokay Gecko 118
Tokyo Violet Herb 158
Tongguan Powder 673
Tongguan San 673
Tongjing Pills 674
Tongjing Wan 674
Tongjingbao Granules 674
Tongjingbao Keli 674
Tongqiao Biyan Pian 675
Tongqiao Biyan Tablets 675
Tongru Granules 676
Tongru Keli 676
Tongtian Koufuye 677
Tongtian Mixture 677
Tongxinluo Capsules 678
Tongxinluo Jiaonang 678
Tongxuan Lifei Pills 679
Tongxuan Lifei Wan 679
Tortoise Carapace and Plastron 21
Tree Peony Bark 46
Tree-of-heaven Bark 40
Troches A-8
Trumpetcreeper Flower 55
Tuber Fleeceflower Stem 28
Tuber Onion Seed 284
Turmeric 260
Turmeric Root Tuber 198
Turpentine Oil 333
Turtle Carapace 21
Twotoothed Achyranthes Root 185

U

Ultraviolet Spectrophotometry and Colourimetry A-33
Unguentum Erodii seu Geranii 680
Uniflower Swisscentaury Root 233
Ussuri Fritillary Bulb 11

V

Venenum Bufonis 314
Vietnamese Sophora Root 215
Villous Amomum Fruit 80
Virgate Wormwood Herb 123
Volumetric Solutions A-119

W

Wanshi Niuhuang Qingxin Pills 680
Wanshi Niuhuang Qingxin Wan 680
Wantong Yankang Pian 682
Wantong Yankang Tablets 682
Wanying Capsules 683
Wanying Ding 682
Wanying Jiaonang 683
Wanying Troches 682
Water for Pharmaceutical Purposes A-99
Weeping Forsythia Capsule 94
Weeping Forsythia Extract 323
Weichang'an Pills 684
Weichang'an Wan 684
Weikangling Capsules 685
Weikangling Jiaonang 685
Weishuning Granules 686
Weishuning Keli 686
Wenyujin Concise Rhizome 279
White Hyacinth Bean 293
White Mulberry Root-bark 45
White Peony Root 222
Wild Carrot Fruit 86
Wild Chrysanthemum Flower 58
Willowleaf Swallowwort Rhizome 266
Wubei Powder 687
Wubei San 687
Wufu Huadu Pills 687
Wufu Huadu Wan 687
Wuhu Powder 688
Wuhu San 688
Wuji Baifeng Pills 689
Wuji Baifeng Wan 689
Wuji Pills 690
Wuji Wan 690
Wuling Powder 691
Wuling San 691
Wushicha Granules 691
Wushicha Keli 691
Wuwei Qingzhuo Powder 692
Wuwei Qingzhuo San 692
Wuwei Shaji Powder 693
Wuwei Shaji San 693
Wuwei Shexiang Pills 693
Wuwei Shexiang Wan 693
Wuzi Yanzong Pills 694
Wuzi Yanzong Wan 694

X

Xiangfu Pills 695
Xiangfu Wan 695
Xiangfu Wan (Shuiwan) 695
Xianglian Pian 696
Xianglian Pills 697
Xianglian Tablets 696
Xianglian Wan 697
Xiangsha Liujun Pills 698
Xiangsha Liujun Wan 698
Xiangsha Yangwei Pills 699

Xiangsha Yangwei Wan 699
Xiangsha Zhizhu Pills 699
Xiangsha Zhizhu Wan 699
Xiangsu Zhengwei Pills 700
Xiangsu Zhengwei Wan 700
Xiaochaihu Granules 701
Xiaochaihu Keli 701
Xiaochaihu Pian 702
Xiaochaihu Tablets 702
Xiao'er Baibu Zhike Syrup 702
Xiao'er Baibu Zhike Tangjiang 702
Xiao'er Baishou Pills 703
Xiao'er Baishou Wan 703
Xiao'er Feire Kechuan Koufuye 704
Xiao'er Feire Kechuan Mixture 704
Xiao'er Fuxie Waifu Powder 705
Xiao'er Fuxie Waifu San 705
Xiao'er Fuxiening Syrup 705
Xiao'er Fuxiening Tangjiang 705
Xiao'er Ganmao Cha 706
Xiao'er Ganmao Granules 706
Xiao'er Ganmao Keli 706
Xiao'er Ganmao Medicinal Teas 706
Xiao'er Ganyan Granules 707
Xiao'er Ganyan Keli 707
Xiao'er Huadu Powder 708
Xiao'er Huadu San 708
Xiao'er Huashi Pills 709
Xiao'er Huashi Wan 709
Xiao'er Jiebiao Granules 710
Xiao'er Jiebiao Keli 710
Xiao'er Jindan Pian 711
Xiao'er Jindan Tablets 711
Xiao'er Jingfeng Powder 711
Xiao'er Jingfeng San 711
Xiao'er Kechuan Granules 712
Xiao'er Kechuan Keli 712
Xiao'er Qingre Pian 713
Xiao'er Qingre Tablets 713
Xiao'er Qingre Zhike Koufuye 714
Xiao'er Qingre Zhike Mixture 714
Xiao'er Resuqing Koufuye 715
Xiao'er Resuqing Mixture 715
Xiao'er Zhibao Pills 715
Xiao'er Zhibao Wan 715
Xiaohuoluo Pills 716
Xiaohuoluo Wan 716
Xiaojianzhong Granules 718
Xiaojianzhong Heji 717
Xiaojianzhong Keli 718
Xiaojianzhong Mixture 717
Xiaojin Pills 719
Xiaojin Wan 719
Xiaokeling Pian 719
Xiaokeling Tablets 719
Xiaomi shuan 720
Xiaomi Suppositories 720
Xiaoqinglong Granules 722
Xiaoqinglong Heji 721
Xiaoqinglong Keli 722
Xiaoqinglong Mixture 721
Xiaoshi Tuire Syrup 723
Xiaoshi Tuire Tangjiang 723
Xiaoshuan Tongluo capsules 723
Xiaoshuan Tongluo Jiaonang 723
Xiaoshuan Tongluo Pian 724
Xiaoshuan Tongluo Tablets 724
Xiaoyao Pills (Big Honeyed Pills) 725
Xiaoyao Pills (watered pills) 726
Xiaoyao Wan (Damiwan) 725
Xiaoyao Wan (Shuiwan) 726
Xiaoying Pills 727
Xiaoying Wan 727
Xiaoyin Pian 728
Xiaoyin Tablets 728
Xiatianwu Pian 729
Xiatianwu Tablets 729
Xiguashuang Runhou Buccal Tablets 729
Xiguashuang Runhou Pian 729
Xingren Zhike Syrup 730
Xingren Zhike Tangjiang 730
Xinning Pian 731
Xinning Tablets 731
Xinqingning Tablets 666
Xinqin Granules 732
Xinqin Keli 732
Xintong Koufuye 733
Xintong Mixture 733
Xiongju Shangqing Pills 734
Xiongju Shangqing Wan 734
Xuanmai Ganjie Granules 735
Xuanmai Ganjie Keli 735
Xuanshi Solution 735
Xuanshi Yaoshui 735
Xuekang Mixture 516
Xueshuan Xinmaining Capsules 736
Xueshuan Xinmaining Jiaonang 736
Xuezhiling Pian 737
Xuezhiling Tablets 737
Xuezhining Pills 738
Xuezhining Wan 738
Xuhan Weitong Granules 739
Xuhan Weitong Keli 739
Xylaria Powder Capsules 377

Y

Yajiao Hadun Powder 740
Yajiao Hadun San 740
Yangdan Pills 740
Yangdan Wan 740
Yanghe Jiening Gao 741
Yanghe Jiening Plaster 741
Yangshen Baofei Pills 741
Yangshen Baofei Wan 741
Yangxin Dingji Concentrated Decoction 742
Yangxin Dingji Gao 742
Yangxue Shengfa Capsules 743
Yangxue Shengfa Jiaonang 743
Yangyin Qingfei Concentrated Decoction 744
Yangyin Qingfei Gao 744
Yangyin Qingfei Pills 744
Yangyin Qingfei Wan 744
Yanhusuo 257
Yao'ai Paper Strip-rolls 745
Yao'aitiao 745
Yatong Yili Pills 746
Yatong Yili Wan 746
Yejuhua Shuan 747
Yejuhua Suppositories 747
Yellow Azalea Flower 64
Yening Syrup 747
Yening Tangjiang 747
Yerbadetajo Herb 132
Yiganning Granules 748
Yiganning Keli 748
Yinhuang Koufuye 749
Yinhuang Mixture 749
Yinianjin 751
Yinianjin Powder 751

Yinqiao Jiedu Capsules 751
Yinqiao Jiedu Granules 753
Yinqiao Jiedu Jiaonang 751
Yinqiao Jiedu Keli 753
Yinqiao Jiedu Pian 753
Yinqiao Jiedu Pills 754
Yinqiao Jiedu Tablets 753
Yinqiao Jiedu Wan 754
Yinqiao Shuangjie Shuan 754
Yinqiao Shuangjie suppositories 754
Yinxu Weitong Granules 756
Yinxu Weitong Keli 756
Yiqi Yangxue Koufuye 757
Yiqi Yangxue Mixture 757
Yiqing Granules 756
Yiqing Keli 756
Yishenling Granules 758
Yishenling Keli 758
Yixian Pills 759
Yixian Wan 759
Yixin Tongmai Granules 759
Yixin Tongmai Keli 759
Yixintong Tablets 662
Yiyuan Powder 760
Yiyuan San 760
Yuanhu Zhitong Pian 760
Yuanhu Zhitong Tablets 760
Yueju Pills 761
Yueju Wan 761
Yufeng Ningxin Tablets 665
Yupingfeng Koufuye 762
Yupingfeng Mixture 762
Yuzhen Powder 763
Yuzhen San 763

Z

Zaizao Pills 764
Zaizao Shengxue Pian 763
Zaizao Shengxue Tablets 763
Zaizao Wan 764
Zanglian Pills 765
Zanglian Wan 765
Zaocys 315
Zedoray Rhizome 260
Zhenggu Shui 766
Zhenggu Tincture 766
Zhenkening Syrup 767
Zhenkening Tangjiang 767
Zhennaoning Capsules 768
Zhennaoning Jiaonang 768
Zhibai Dihuang Pills 768
Zhibai Dihuang Wan 768
Zhichuanling Injection 770
Zhichuanling Zhusheye 770
Zhikang Pian 771
Zhikang Tablets 771
Zhikebao Pian 772
Zhikebao Tablets 772
Zhike Juhong Koufuye 773
Zhike Juhong Mixture 773
Zhimaikang Capsules 774
Zhimaikang Jiaonang 774
Zhishi Daozhi Pills 774
Zhishi Daozhi Wan 774
Zhisou Dingchuan Koufuye 775
Zhisou Dingchuan mixture 775
Zhisou Huatan Pills 776
Zhisou Huatan Wan 776
Zhitong Huazheng Capsules 777
Zhitong Huazheng Jiaonang 777
Zhitong Zijin Pills 778
Zhitong Zijin Wan 778
Zhizhu Pills 778
Zhizhu Wan 778
Zhizi Jinhua Pills 779
Zhizi Jinhua Wan 779
Zhongfeng Huichun Pian 780
Zhongfeng Huichun Tablets 780
Zhongfeng Huichu Pills 780
Zhongfeng Huichu Wan 780
Zhonghua Dieda Pills 781
Zhonghua Dieda Wan 781
Zhongjing Weiling Pills 782
Zhongjing Weiling Wan 782
Zhuanggu Guanjie Pills 783
Zhuanggu Guanjie Wan 783
Zhuanggu Shenjin Capsules 784
Zhuanggu Shenjin Jiaonang 784
Zhuche Pills 785
Zhuche Wan 785
Zhuhuang Chuihou Powder 785
Zhuhuang Chuihou San 785
Zhuli Datan Pills 786
Zhuli Datan Wan 786
Zhusheyong shuanghuanglian 786
Zicao Gao 788
Zicao Ointment 788
Zijin Ding 788
Zijin Troches 788
Zingiber (Dried Ginger) 280
Zixinyin Koufuye 789
Zixinyin Mixture 789
Zixue 790
Zixue Powder 790
Zuojin Capsules 790
Zuojin Jiaonang 790
Zuojin Pills 791
Zuojin Wan 791